METALIKA KACIN d.o.o.
Izbička 2, 11253 SREMČICA
Tel./fax (+381) 011/ 25 21 756
GSM (+381) 062 / 311 768
metalika.kacin@gmail.com

METALIKA Tehnika zatvaranja KACIN

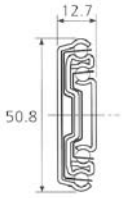

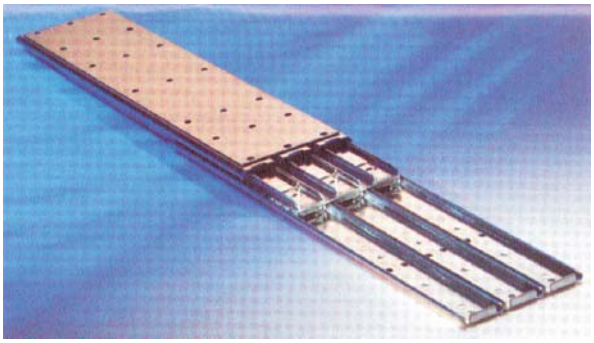

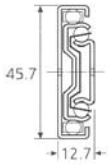

Teleskopske klizne šine

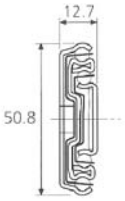

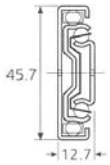

Klizne šine sa kugličnim ležajevima

Klizne šine sa niskom nosivošćom

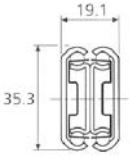

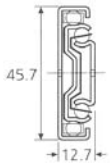

Klizne šine sa srednjom nosivošćom

Klizne šine sa visokom nosivošćom

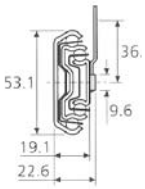

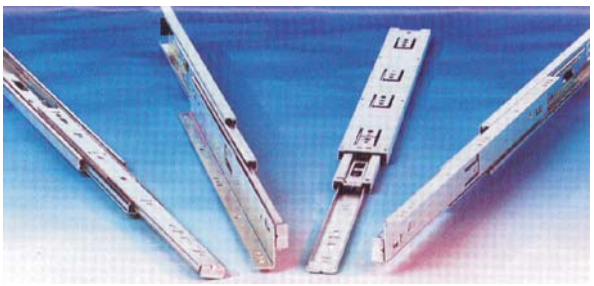

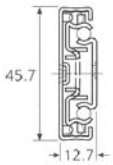

Klizne šine sa delimičnim izvlačenjem

Klizne šine sa punim izvlačenjem

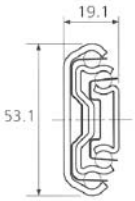

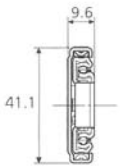

Klizne šine sa produženim izvlačenjem

Klizne šine u nerđajućoj varijanti

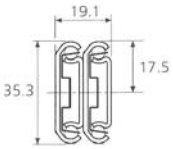

Klizne šine za radne pultove

Klizne šine za vozila, vozove i brodove

Široki izbor teleskopskih kliznih šina
za metalnu industriju, metalna kućišta i ormariće, metalni i drveni nameštaj, za upotrebu kod izrade mašinske opreme, za upotrebu u industriji prerade lima, transportnu opremu i vozila, za sefove i prodajne automate.
.

Accuride QUICKSHIP PROGRAMME

www.metalika-kacin.com

Light duty slides, load rating up to 50kg

Guías de carga ligera, capacidad de carga hasta 50kg

Guide per impieghi leggeri, portata fino a 50kg

Two-way travel / recorrido bilateral / corsa bidirezionale

2002

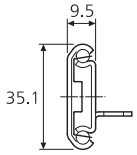

35kg p32

2026

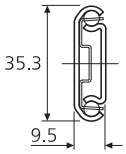

50kg p33

3630

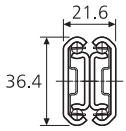

45kg p34

75% extension / 75% extensión / estrazione 75%

2421

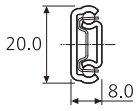

16kg p35

DS2728

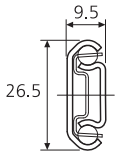

20kg p36

2109

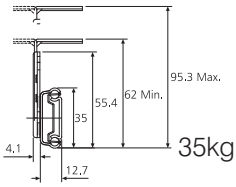

35kg p37

0201

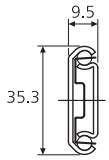

50kg p38

2132

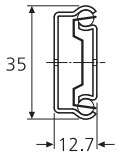

50kg p39

2132DO

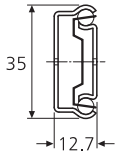

50kg p40

100% extension / 100% extensión / estrazione 100%

2431

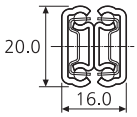

20kg p41

2632

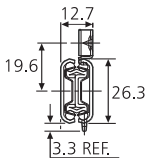

35kg p42

3732

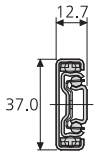

40kg p44

2601

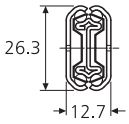

45kg p46

2642

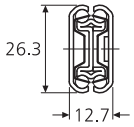

45kg p47

3832TR

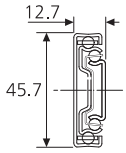

45kg p48

3832HDTR

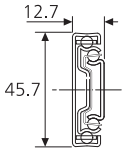

45kg p48

3832EC

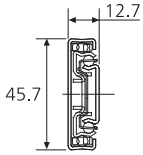

45kg p50

3832

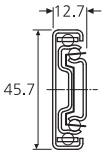

50kg p51

3832SC

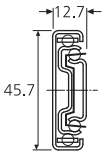

50kg p53

3832HDSC

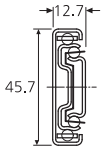

50kg p53

3832DO

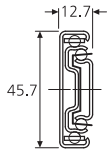

50kg p55

DH3832

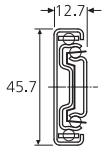

50kg p57

633xx

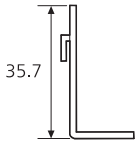

Clip-on brackets / Escuadras de mordaza / Staffe a clip p59

100%+ extension / 100%+ extensión / estrazione 100%+

7400-50SC

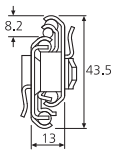

45kg p60

DA5321

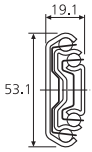

50 kg p61

Medium duty slides, load rating 51 - 99kg

Guide per impieghi normali, portata 51 - 99kg

Linear / movimiento lineal / movimento lineare

0115RS

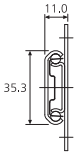

60kg p64

75% extension / 75% extensión / estrazione 75%

0204

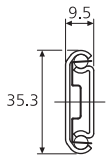

65kg p65

DS2028

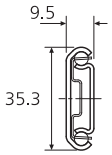

65kg P66

100% extension / 100% extensión / estrazione 100%

DS0330

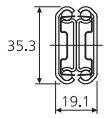

65kg p67

100%+ extension / 100%+ extensión / estrazione 100%+

2907

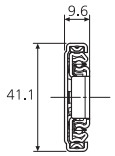

55kg p68

2907WB

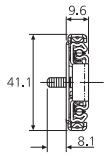

55kg p69

5517-50

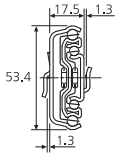

55kg p71

3301

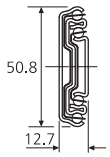

68kg p72

3307

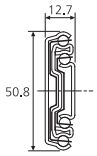

68kg p73

3308

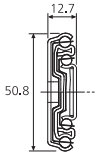

68kg p74

0301

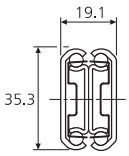

70kg p75

0305

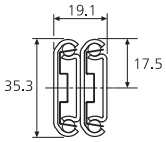

70kg p76

Heavy duty slides, load rating 100kg+

Guide per impieghi gravosi, portata 100kg+

75% extension / 75% extensión / estrazione 75%

DA4120

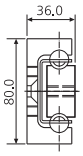

438kg p78

100% extension / 100% extensión / estrazione 100%

3607

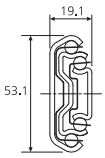

120kg p80

9301

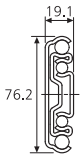

227kg p81

9308

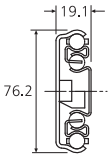

227kg p82

634xx

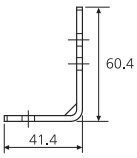

Accessory bracket kit /
Juego de escuadras /
Kit accessori p86

DA4140

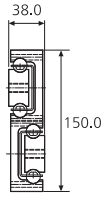

400kg p88

100%+ extension / 100%+ extensión / estrazione 100%+

5417

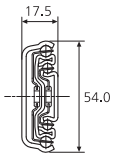

100kg p90

DS5322

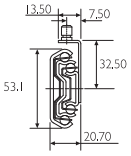

120kg p91

5321SC

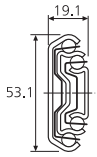

120kg p92

5321

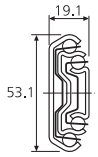

180kg p93

DS5321

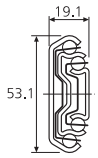

180kg p94

0522

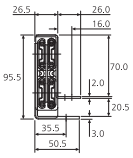

180kg p95

Corrosion resistant slides

Resistente a la corrosión

Resistente alla corrosione

DS2728

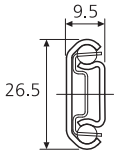

20kg p36

DH3832

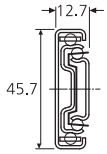

50kg p57

DA5321

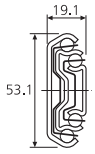

50kg p61

DS2028

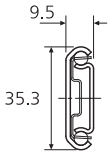

65kg p66

DS0330

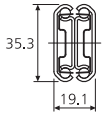

65kg p67

DS5322

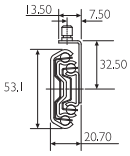

120kg p91

DS5321

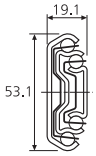

180kg p94

DA4120

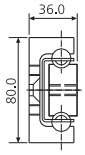

438kg p78

DA4140

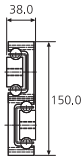

400kg p88

Enclosure mounting accessories p97

CPU holders p105

Bottle opener p110

Introduction

The most comprehensive range of off-the-shelf telescopic slides in the world

Accuride has been at the forefront in the design and manufacture of telescopic slides and access and movement systems since 1962.

Our products are built into many industrial applications such as commercial and industrial machinery, electronic units and test equipment, and into a variety of transport applications such as emergency vehicles and trucks as well as aircraft, trains, ships and boats. They ensure the smooth movement of sliding components, contributing significantly to optimum space utilization, efficient storage and easy access for repair and maintenance.

Quality

With extensive first-class manufacturing and testing facilities, we are able to offer quality components that will perform reliably over the lifetime of your product.

All our fully operational production facilities are certified to ISO9001, with the European plants also achieving the ISO14001 Environmental Standard and the ISO TS16949 standard for automotive production.

Local availability and fast delivery

Our highly successful Quick Ship Programme is designed for customers who require an off-the-shelf service. Quick Ship covers an extensive range of slides and ancillary products and is available through the widespread Accuride sales and distribution network.

Our distribution partners, backed by Accuride's design and technical teams, are expert in recommending the right slide for integration into your product.

Please contact us for details of your local Accuride distribution partner.

This catalogue is available in print, or via our website, www.accuride-europe.com. As market demand changes Accuride may alter the products included in the Quick Ship Programme and we reserve the right to alter specifications without notice.

Your local Accuride distributor will be able to advise you on product availability.

Slide selection

There are five stages in the selection of the most appropriate slide for your application.

1. Load rating

- Load ratings quoted are the maximum for a pair of 450mm long vertically (side) mounted slides installed 450mm apart.
- In general, wider drawers require a slide with a higher load rating and a cross section designed to withstand lateral stress. Our technical department will be pleased to advise you.
- Load ratings will change according to the length of the slide. See individual datasheets for details.
- Ratings are based on frequent use up to 10,000 cycles. See individual datasheets for details of cycle rates used for testing.
- The measurements are taken between and at the midpoint of the drawer member and are given in kg.
- Load ratings quoted are dynamic. Accuride® slides have a 100% static safety factor in the extended position.
- Horizontally (flat) mounting the slides reduces the load capacity to at least 25% of the vertical (side) mount capacity. Not all slide models can be used in flat mount applications.

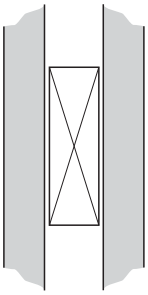

Vertically mounted = 100% quoted load rating

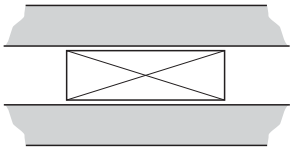

Horizontally mounted = 25% quoted load rating

- Deflection of flat mounted slides will vary depending upon the application. We recommend prototyping to determine that the deflection is within an acceptable range.
- We advise clients to test slides in the intended application.
- All fixing positions should be used to achieve maximum load rating.
- Appropriate fixing materials must be used.
- Mounting slides in different configurations will affect performance and load rating. See the illustrations below.

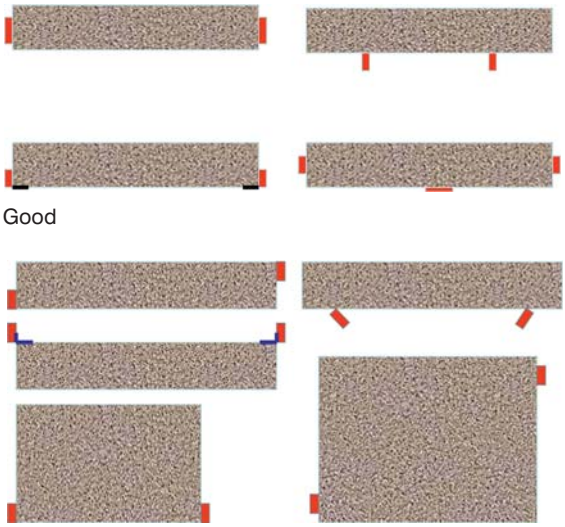

Good

OK

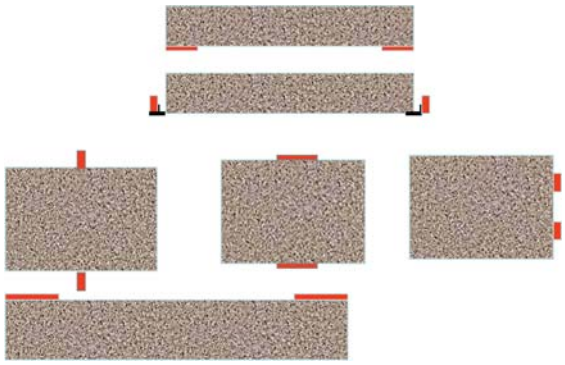

Not Recommended

2. Extension or travel

- 75% extension – drawer opens approximately 75% of the total length of the slide
- 100% extension – drawer opens the same amount as the slide length
- 100%+ extension – over-travel is achieved. The drawer opens in excess of the slide length.
- Most full (100%) extension slides have nominal over-travel. Please see individual pages for details.

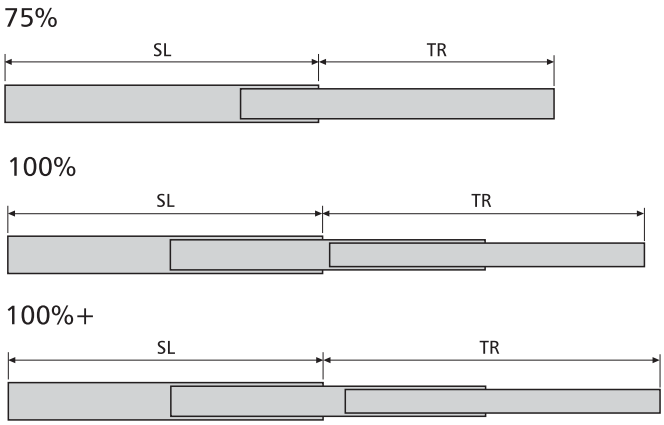

SL = Slide Length TR = Travel

3. Slide length

- Slide length is measured as the longest dimension of a fully closed slide. As a rule, always use the maximum length allowable in the application.

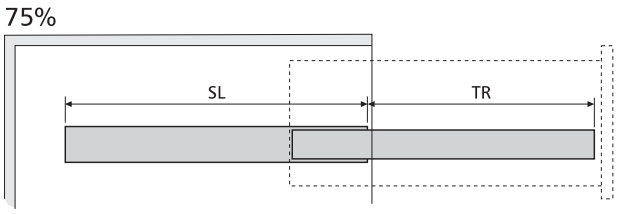

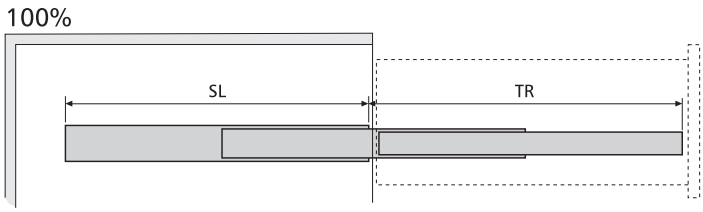

4. Side space

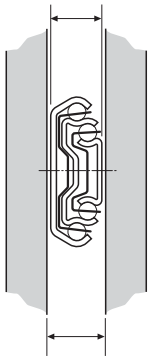

- The amount of space necessary to accommodate the thickness of the slide assembly.
- For optimum performance allow between +0.2mm and +0.5mm over the nominal slide thickness, e.g. for a 12.7mm slide, the side space allowance should be between 12.9 and 13.2mm.
- Precision slides cannot absorb large gap deviations between the cabinet and the drawer. The cabinet and drawer must be square and parallel to each other for optimal working of the pair of slides.

5. Determine any special features required

- Disconnect allows simple connect/disconnect from the slide assembly

  Lever - disconnect is achieved by releasing an internal lever and by pulling the drawer firmly through the resistance of the ball retainer

  Rail - a rail latch allows you to raise the drawer off the slide

  Push latch - a latch is pressed to release the drawer and disconnect is achieved by pulling the drawer firmly through the resistance of the ball retainer

- Locks hold the slide either closed or open and a lever must be actuated to move the slide
- Hold-in and hold-out keeps the slide open or closed until extra force is applied.
- Self close slides include a spring attachment designed to close the slide and prevent bounce back.
- Dampened self-close (EC) slows the closing action for a controlled and smooth operation.
- Touch release slides open with pressure to the front of the slide.
- Mounting options, for example, bayonets and brackets
- Cam drawer adjust allows minute adjustment to the drawer front for easy alignment. Standard feature on 2132 and 3832 series slides.
- Shock blocks are hardened steel pins that provide an interference fit between the slide members to minimize the amplification of vibration and reduce the damaging effects of shock in the closed position. Available on slide 0522 as standard.
- Standard feature suffixes:
  SC - self close
  HDSC - heavy duty self close
  DO - hold out
  TR - touch release
  HDTR - heavy duty touch release
  EC - easy close

Lock-out

Lock-in

Hold-in

Hold-out

Disconnect

- Material/finish

Members

- cold rolled mild steel (FeP01Am)
- cold rolled stainless steel (1.4301 austenitic steel)
- aluminium ($AlMg_3$)

Ball retainers

- cold rolled zinc plated (FeP01Am)
- stainless steel (1.4301 austenitic steel)
- plastic (Nylon 6-6)

Ball bearings

- carbon chrome steel (grade 200)
- stainless steel (1.4034 ferritic steel)
- plastic (Delrin)

Lubricant

- Hi-Lo temperature grease, minimum operating range -20° to +110°

- Slide ordering prefixes are:

- DZ- electro zinc plate and blue passivate
- DB- electro zinc plate and black passivate
- DW- white
- DH- corrosion resistant (high corrosion resistance 96 hours)
- DS- stainless steel
- DA- aluminium

Quick reference guide

METALIKA Locking systems KACIN
www.metalika-kacin.com

Main features														
Load rating kg	Extension	Slide	Load kg	Slide thickness x height mm	Disconnect	Hold-in	Hold-out	Lock-in	Lock-out	Self close	Corrosion resistant	Optional bracket	Other features	Page
-50	2 Way	2002	35	9.5 x 35.1		●								32
		2026	50	9.5 x 35.3			●							33
		3630	45	21.6 x 36.4		●								34
	75%	2421	16	8.0 x 20.0									Minimum section	35
		DS2728	20	9.5 x 26.5		●					●		Stainless steel	36
		2109	35	12.7 x 35.0	●	●	●					●		37
		0201	50	9.5 x 35.3								●		38
		2132	50	12.7 x 35.0	●	●						●		39
		2132DO	50	12.7 x 35.0	●	●	●					●		40
	100%	2431	20	16.0 x 20.0									Minimum section	41
		2632	35	12.7 x 26.3	●	●							Mounting rail	42
		3732	40	12.7 x 37.0	●	●						●		44
		2601	45	12.7 x 26.3		●							Minimum section	46
		2642	45	12.7 x 26.3		●							Groove mounting option	47
		3832TR	45	12.7 x 45.7	●	●							Touch release	48
		3832HDTR	45	12.7 x 45.7	●	●							Heavy duty touch release	48
		3832EC	45	12.7 x 45.7	●	●				●			Soft close	50
		3832	50	12.7 x 45.7	●	●						●		51
		3832SC	50	12.7 x 45.7	●	●				●		●		53
		3832HDSC	50	12.7 x 45.7	●	●				●		●		53
		3832DO	50	12.7 x 45.7	●	●	●					●		55
		DH3832	50	12.7 x 45.7	●	●					●			57
	100%+	7400-50SC	45	13.0 x 43.5		●				●			Bayonet mounting	60
		DA5321	50	19.1 x 53.1		●					●		Aluminium	61
51-99	Linear	0115RS	60	11.0 x 35.3										64
	75%	0204	65	9.5 x 35.3	●				●			●		65
		DS2028	55	9.5 x 35.3		●					●		Stainless steel	66
	100%	DS0330	65	19.1 x 35.3		●					●		Stainless steel	67
	100%+	2907	55	9.6 x 41.1	●				●			●		68
		2907WB	55	9.6 x 41.1	●				●				Enclosure mounting brackets included	69
		5517-50	55	17.5 x 53.4		●							Bayonet mounting	71
		3301	68	12.7 x 50.8		●						●		72
		3307	68	12.7 x 50.8	●				●			●		73
		3308	68	12.7 x 50.8	●			●	●			●		74
		0301	70	19.1 x 35.3								●		75
		0305	70	19.1 x 35.3	●				●			●		76
100+	75%	DA4120	438	36.0 x 80.0							●		Aluminium	78
	100%	3607	120	19.1 x 53.1	●				●			●		80
		9301	227	19.1 x 76.2								●		81
		9308	227	19.1 x 76.2				●	●			●	Front lever lock release	82
		DA4140	400	38.0 x 150.0							●		Aluminium	88
	100%+	5417	100	17.5 x 54.0		●								90
		DS5322	120	20.7 x 53.1	●	●					●	●	Stainless steel	91
		5321SC	120	19.1 x 53.1		●				●		●		92
		5321	180	19.1 x 53.1		●						●		93
		DS5321	180	19.1 x 53.1		●					●		Stainless steel	94
		0522	180	26.5 x 95.5									Shock blocks & mounting plate	95

Environment

Accuride slides are designed for indoor use and should be protected from excessive moisture, chemical fumes, dirt and corrosion.

Accuride's corrosion resistant slide range offers slides for more demanding environments. See individual datasheets for further information.

The Accuride self-cleaning ball retainer protects slide raceways by removing foreign particles between ball bearings and the lubricant provided is sufficient for normal slide life. Should you need to clean the slides, you can re-lubricate them with quality grease rated for extreme pressure.

- Accuride slides are designed to be used for extended periods in temperatures between -17°C and 70°C

- Extreme temperatures can affect the lubricant and plastic or rubber components

Accuride's slides with DZ/DS/DA prefixes do not contain any of the restricted or prohibited substances referred to in the ELV (End of Life Vehicles) 2000/53/EC (27.06.02), the RoHS (Restriction of Hazardous Substances) 2002/95/EC (27.01.03), the WEEE (Waste Electrical & Electronic Equipment) 2002/96/EC (27.01.03) Directives.

Hexavalent Chrome (Chrome 6) is used to increase corrosion resistance over zinc plating and it is only present when the Black Passivate (DB) is used. Products with the black finish (DB) manufactured in Europe are available without Chrome 6 on request.

Accuride reserve the right to alter specifications without notice
Accuride se reserva el derecho de alterar las especificaciones sin aviso previo
Accuride si riserva il diritto di apportare modifiche senza ulteriore comunicazione

Technical information

This catalogue offers the most popular telescopic slides used within the industrial and electro-mechanical markets and is designed to assist you in selecting the most suitable slide for your application.

Specialist slides are available for specific applications and your local Accuride distributor or sales representative can help you in identifying the correct choice.

For specialist applications, where the slides are exposed to vibration and/or rough usage, or where frequency of access is high, the load ratings quoted may not be applicable.

The products in this catalogue are grouped into sections and each section has a selection guide and a detailed datasheet for each product. Drawings and further technical information can be downloaded from www.accuride-europe.com

- Dimensions in millimetres. Dimensional tolerance ±0.5mm
- Diameters ±0.1mm unless otherwise stated
- All fixing positions must be used to achieve maximum load rating
- If slides are mounted horizontally (flat mount) the load rating is decreased to approximately 25% of the vertical load rating
- Weights (W) and loads (L) are given in kg per pair
- Travel (TR) ±3.0mm
- 80,000 denotes dynamic cycles tested
- When a slide is available in more than one colour, the two-letter prefix on the order code should be changed accordingly. The order code is made up as follows:

Finish	Slide number	Slide length	No. in kit
DZ	2109	-0045	-2

Technical support

Please visit the FAQ/technical support page on our website, www.accuride-europe.com, for the most current technical information or use the on-line request form to contact us by email.

Light duty slides, load rating up to 50kg

Guías de carga ligera, capacidad de carga hasta 50kg

Guide per impieghi leggeri, portata fino a 50kg

Model Modelo Modello	Load Kg Carga Portata	Travel Recorrido Corsa	Disconnect Desconexión Sgancio	Page Página Pagina
2002	35	2-way		32
2026	50	2-way		33
3630	45	2-way		34
2421	16	75%		35
DS2728	20	75%		36
2109	35	75%	●	37
0201	50	75%		38
2132	50	75%	●	39
2132DO	50	75%	●	40
2431	20	100%		41
2632	35	100%	●	42

Model Modelo Modello	Load Kg Carga Portata	Travel Recorrido Corsa	Disconnect Desconexión Sgancio	Page Página Pagina
3732	40	100%	●	44
2601	45	100%		46
2642	45	100%		47
3832TR/HDTR	45	100%	●	48
3832EC	45	100%	●	50
3832	50	100%	●	51
3832SC/HDSC	50	100%	●	53
3832DO	50	100%	●	55
DH3832	50	100%	●	57
7400-50SC	45	100%+		60
DA5321	50	100%+		61

2002

- Two way travel
- Load rating up to 35kg
- 75% extension
- 9.5mm slide thickness
- Hold-in (at centre)
- Built-in mounting tabs
- Fixing hardware included

50,000

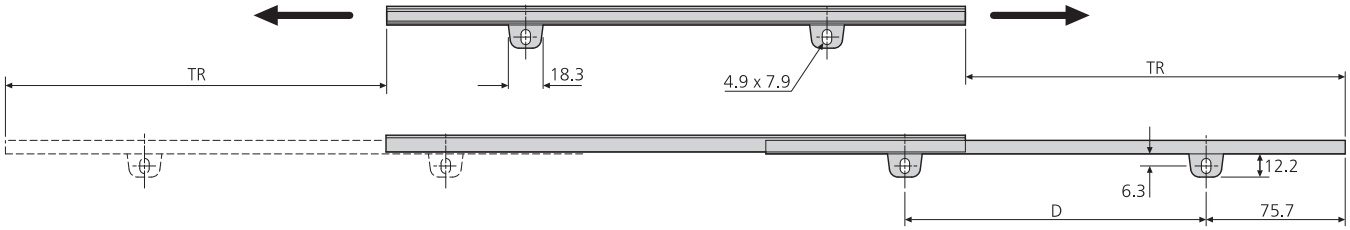

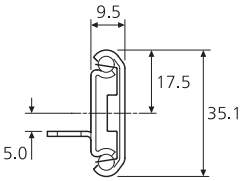

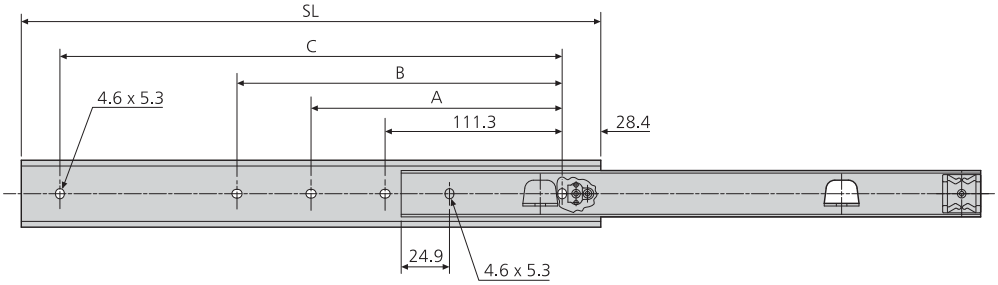

DZ2002	mm						kg	
	SL	TR	A	B	C	D	W	L
DZ2002-0012-2	305	221.5	-	136.7	247.7	153.4	0.67	35
DZ2002-0014-2	356	272.3	-	187.5	298.5	204.2	0.76	35
DZ2002-0016-2	406	297.7	-	238.3	349.3	255.0	0.87	35
DZ2002-0018-2	457	323.1	200.2	289.1	400.1	305.8	0.97	35
DZ2002-0020-2	508	373.9	225.6	339.9	450.9	356.6	1.06	32
DZ2002-0022-2	558	399.3	251.0	390.7	501.7	407.4	1.16	31
DZ2002-0024-2	610	424.7	276.4	441.5	552.5	458.2	1.27	29
DZ2002-0026-2	660	475.5	301.8	492.3	603.3	509.0	1.36	27
DZ2002-0028-2	711	500.9	327.2	543.1	654.1	559.8	1.47	24

Notes:

- *Fixing recommendation: M4 screw*

- Two-way travel
- Load rating up to 50kg
- 75% extension
- Hold-out on both sides
- 9.5mm slide thickness

50,000

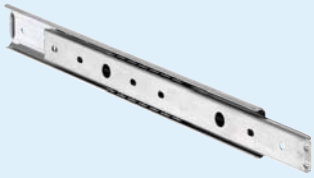

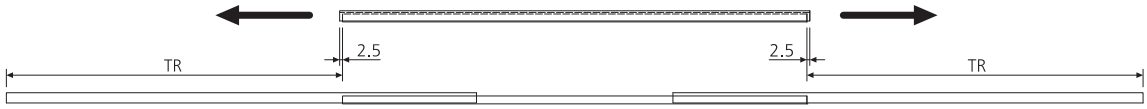

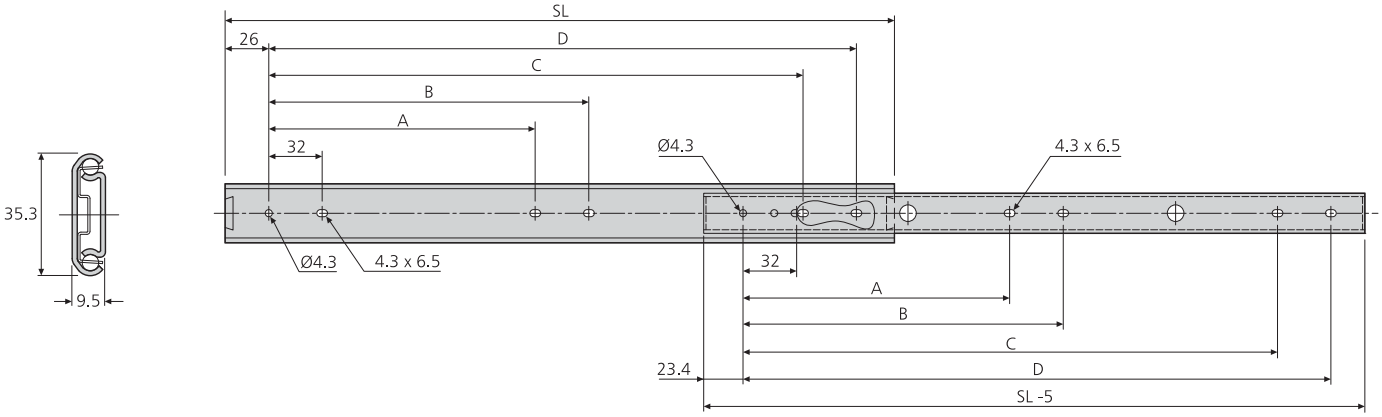

2026	mm						kg	
	SL	TR	A	B	C	D	W	L
DZ2026-0030	300	211.3	128	160	224	256	0.6	50
DZ2026-0035	350	248.6	160	192	256	288	0.7	50
DZ2026-0040	400	285.9	192	224	320	352	0.7	45
DZ2026-0045	450	323.2	224	256	352	384	0.8	40
DZ2026-0050	500	360.5	256	288	416	448	0.9	40
DZ2026-0055	550	397.8	256	288	480	512	1.0	35
DZ2026-0060	600	435.1	288	320	512	544	1.1	35
DZ2026-0065	650	472.4	288	320	576	608	1.2	30
DZ2026-0070	700	509.7	320	352	608	640	1.3	30

Notes:

- *Fixing recommendation: M4 screw*

Note:

- *Consigli per il fissaggio: vite M4*

3630

- Two-way travel
- Load rating up to 45kg
- 100% extension
- 21.6mm slide thickness
- Hold-in (at centre)

80,000

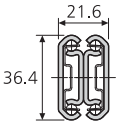

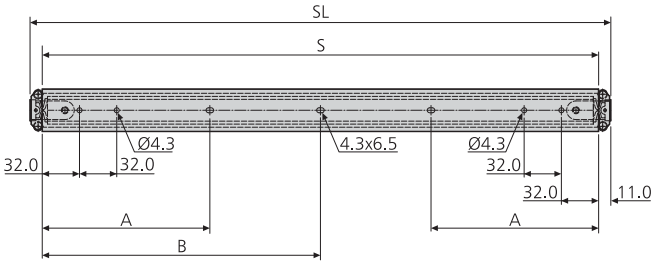

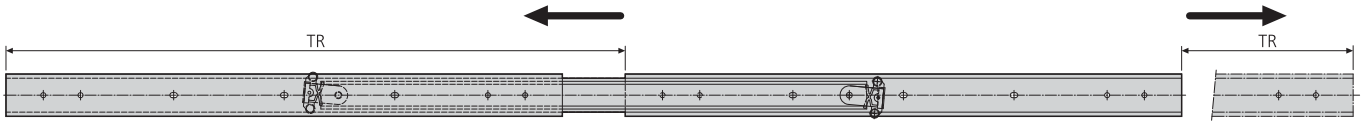

3630	mm						kg	
	SL	S	TR	TRx2	A	B	W	L
DZ3630-0040	400	378	432	864	144	-	2.08	40
DZ3630-0050	500	478	532	1064	144	-	2.62	45
DZ3630-0060	600	578	632	1264	144	-	3.14	45
DZ3630-0070	700	678	732	1464	176	339	3.70	40

Notes:

- *Fixing recommendation: M4 screw*

- Load rating up to 16kg
- 75% extension
- Low profile: only 20mm high

80,000

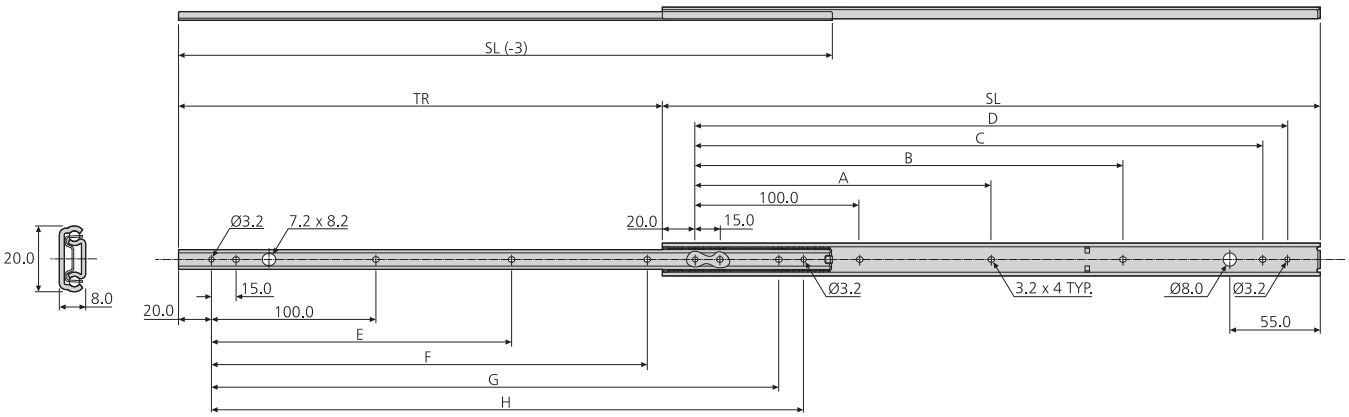

2421	mm										kg	
	SL	TR	A	B	C	D	E	F	G	H	W	L
DZ2421-0020	200	132	-	-	145.0	160.0	-	-	145.0	160.0	0.239	13
DZ2421-0025	250	182	-	-	195.0	210.0	-	150.0	195.0	210.0	0.293	15
DZ2421-0030	300	220	-	160.0	245.0	260.0	-	190.0	245.0	260.0	0.351	16
DZ2421-0035	350	257	-	210.0	295.0	310.0	-	225.0	295.0	310.0	0.408	16
DZ2421-0040	400	294	-	260.0	345.0	360.0	-	265.0	345.0	360.0	0.465	15
DZ2421-0045	450	331	205.0	310.0	395.0	410.0	190.0	300.0	395.0	410.0	0.524	13
DZ2421-0050	500	381	230.0	360.0	445.0	460.0	225.0	337.0	445.0	460.0	0.578	11

Notes:

- *Fixing recommendation: M3 screw*

DS2728

- High grade stainless steel
- Load rating up to 20kg
- 75% extension
- 9.5mm slide thickness
- Hold-in
- Ideal for environments where mild steel might be subject to corrosion

80,000

Stainless steel
Acero inoxidable
Acciaio inossidabile

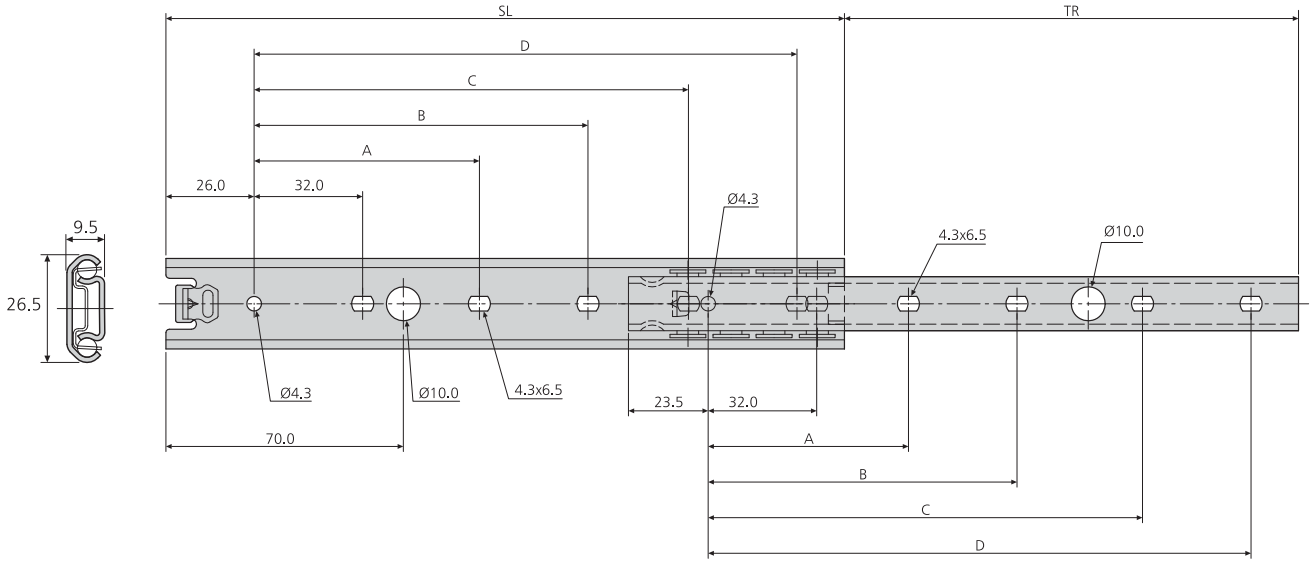

DS2728	mm						kg	
	SL	TR±3	A	B	C	D	W	L
DS2728-0025	250	170	-	-	160	192	0.33	15
DS2728-0030	300	208	128	-	224	256	0.39	18
DS2728-0035	350	245	128	-	256	288	0.46	20
DS2728-0040	400	283	160	192	320	352	0.52	20
DS2728-0045	450	320	160	192	384	416	0.59	20
DS2728-0050	490	347	192	224	416	448	0.64	18

Notes:

- *Fixing recommendation: M4 screw*

- Load rating up to 35kg
- 75% extension
- Height adjustable brackets included
- Front disconnect
- Hold-in and hold-out
- Optional clip-on bracket for bottom mounting

50,000

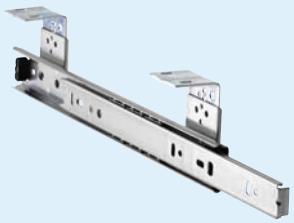

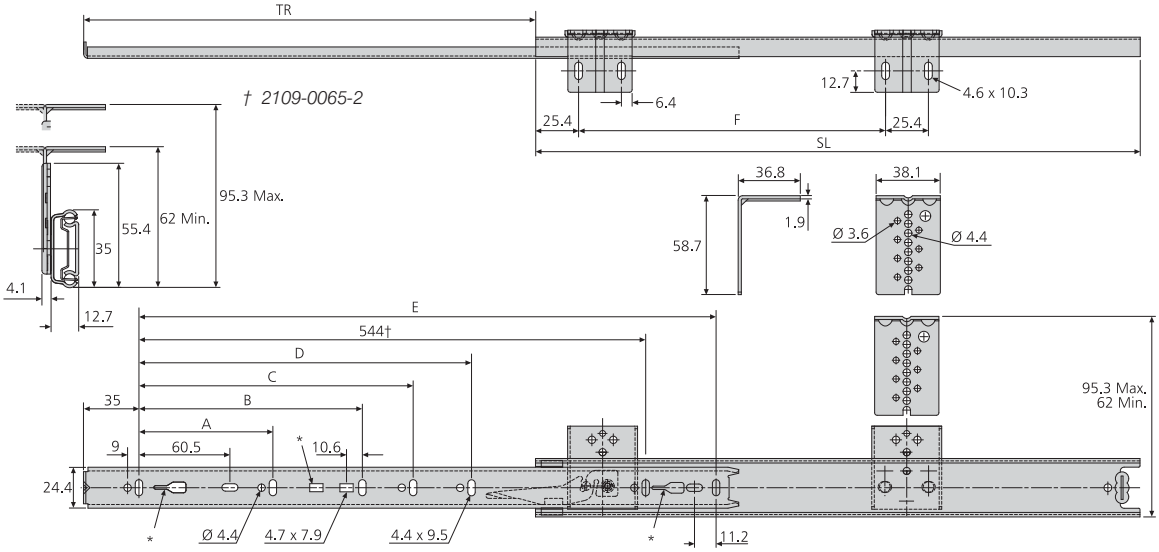

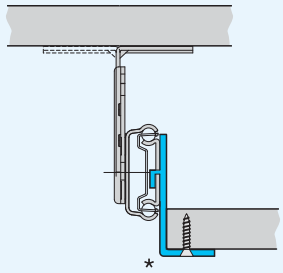

2109	mm								kg	
	SL	TR	A	B	C	D	E	F	W	L
DZ2109-0030-2	300	205	96	-	-	-	242	215.9	0.83	35
**2109-0035-2	350	260	128	-	-	-	292	215.9	0.97	35
**2109-0040-2	400	281	128	-	-	-	342	215.9	1.10	30
DZ2109-0045-2	450	331	128	224	-	-	392	215.9	1.23	30
DZ2109-0050-2	500	376	128	224	-	-	442	292.1	1.36	25
DZ2109-0055-2	550	415	128	224	320	-	492	292.1	1.51	25
DZ2109-0060-2	600	451	128	224	320	-	542	292.1	1.65	25
DZ2109-0065-2	650	488	128	224	320	416	592	419.1	1.78	20
DZ2109-0070-2	700	526	128	224	288	416	642	419.1	1.93	20

Notes:

- *Fixing hardware included*
- **For optional clip-on brackets refer to page 59*
- *** Prefix DZ for bright zinc plate, DB for black zinc plate*

0201

- Load rating up to 50kg
- 75% extension
- 9.5mm slide thickness
- Basic, two-section slide
- Optional enclosure mounting brackets

10,000

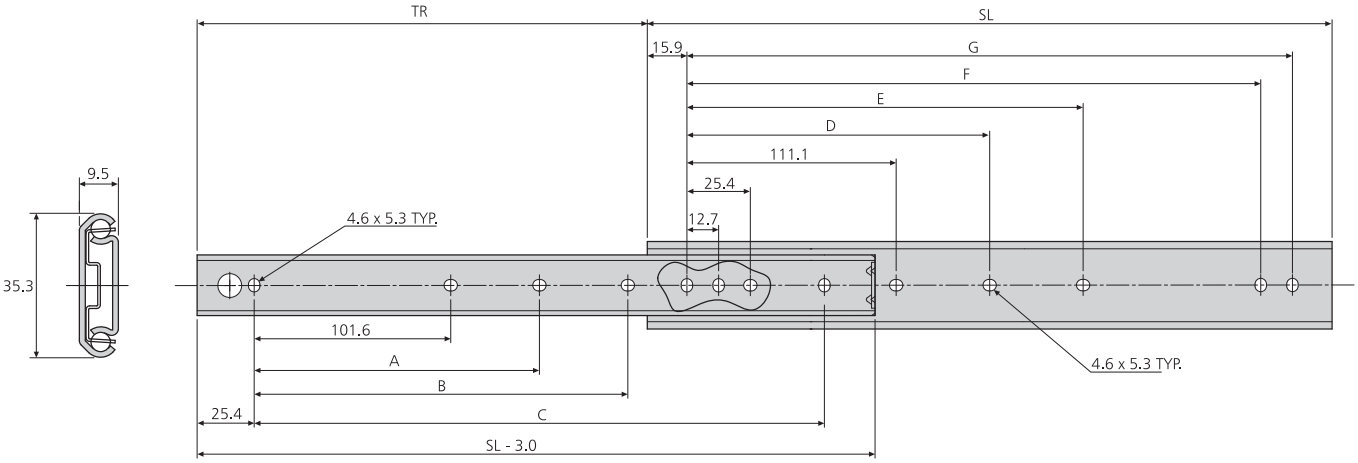

0201	mm									kg	
	SL	TR	A	B	C	D	E	F	G	W	L
DZ0201-0012	305	227	-	152.4	254.0	-	149.2	260.3	273.0	0.57	50
DZ0201-0014	356	277	-	203.2	304.8	-	200.0	311.1	323.8	0.66	50
DZ0201-0016	406	302	-	254.0	355.6	-	250.8	361.9	374.6	0.77	45
DZ0201-0018	457	328	203.2	304.8	406.4	212.7	301.6	412.7	425.4	0.87	45
DZ0201-0020	508	379	228.6	355.6	457.2	238.1	352.4	463.5	476.2	0.96	40
DZ0201-0022	559	405	254.0	406.4	508.0	263.5	403.2	514.3	527.0	1.06	40
DZ0201-0024	610	429	279.4	457.2	558.8	288.9	454.0	565.1	577.8	1.17	35
DZ0201-0026	660	481	304.8	508.0	609.6	314.3	504.8	615.9	628.6	1.25	30
DZ0201-0028	711	506	330.2	558.8	660.4	339.7	555.6	666.8	679.4	1.34	30

Notes:

- *Fixing recommendation: M4 screw*
- *For enclosure mounting brackets refer to page 103*
- *For cable carriers refer to page 101*

Note:

- *Consigli per il fissaggio: vite M4*
- *Per le staffe di montaggio rack, fare riferimento a pagina 103*
- *Per i portacavi, fare riferimento a pagina 101*

- Load rating up to 50kg
- 75% extension
- 12.7mm slide thickness (14mm with mounting bracket)
- Optional clip-on bracket for bottom & platform mounting
- Front disconnect
- Hold-in
- Cam drawer adjust (3.2mm)

10,000

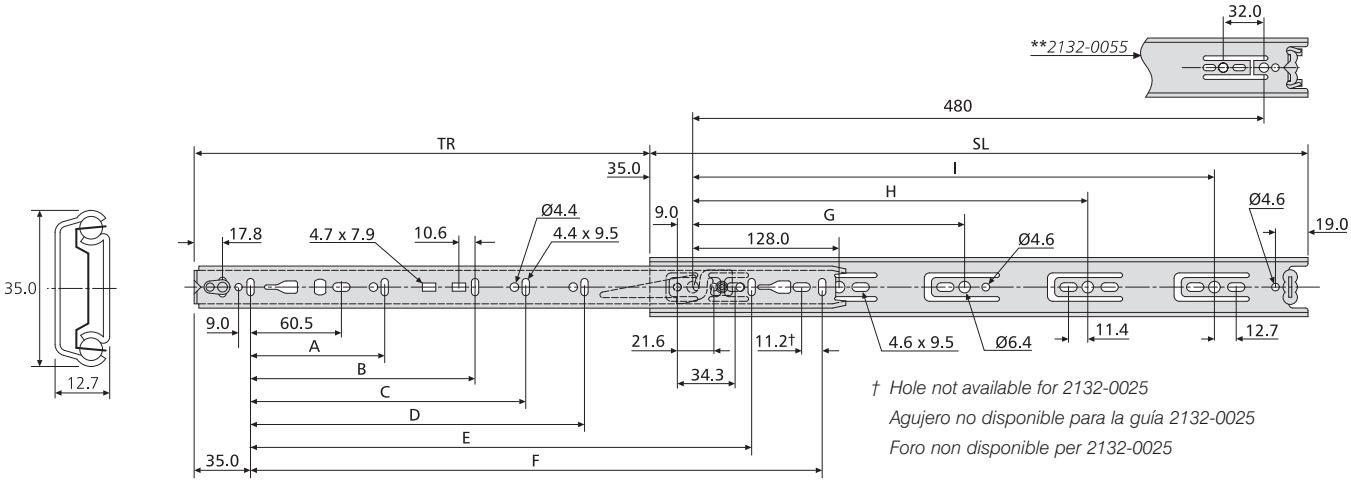

† *Hole not available for 2132-0025*
Agujero no disponible para la guía 2132-0025
Foro non disponible per 2132-0025

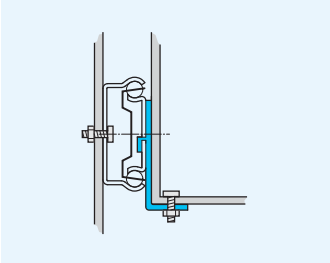

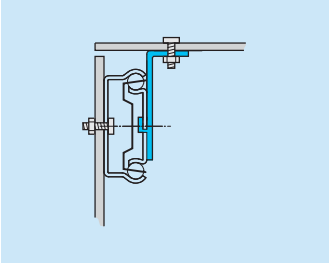

2132	mm											kg	
	SL	TR	A	B	C	D	E	F	G	H	I	W	L
*2132-0025	250	163	96	-	-	-	-	192	-	-	-	0.49	50
*2132-0030	300	205	96	-	-	-	-	242	224	-	-	0.56	50
*2132-0035	350	260	128	-	-	-	-	292	224	-	-	0.69	50
*2132-0040	400	281	128	-	-	-	-	342	224	-	320	0.77	45
*2132-0045	450	331	128	224	-	-	-	392	224	-	352	0.84	45
*2132-0050	500	376	128	224	-	-	-	442	224	-	416	0.94	45
*2132-0055	550	415	128	224	320	-	-	492	224	352	**	1.05	40
*2132-0060	600	451	128	224	320	-	-	542	224	352	480	1.13	40
*2132-0065	650	488	128	224	320	416	544	592	224	352	544	1.25	35
*2132-0070	700	526	128	224	288	416	-	642	224	352	544	1.37	35

** Prefix DZ for bright zinc plate, DB for black zinc plate*
** Prefijo DZ para cinc brillante, DB para negro*
** Prefisso DZ per passivazione brillante, DB per passivazione nera*

Notes:

- *Fixing recommendation: M4 screw*
- *For brackets refer to page 59*

2132DO

- Hold-out in open position
- Load rating up to 50kg
- 75% extension
- 12.7mm slide thickness (14mm with mounting bracket)
- Optional clip-on bracket for bottom & platform mounting
- Front disconnect
- Hold-in
- Cam drawer adjust (3.2mm)

10,000

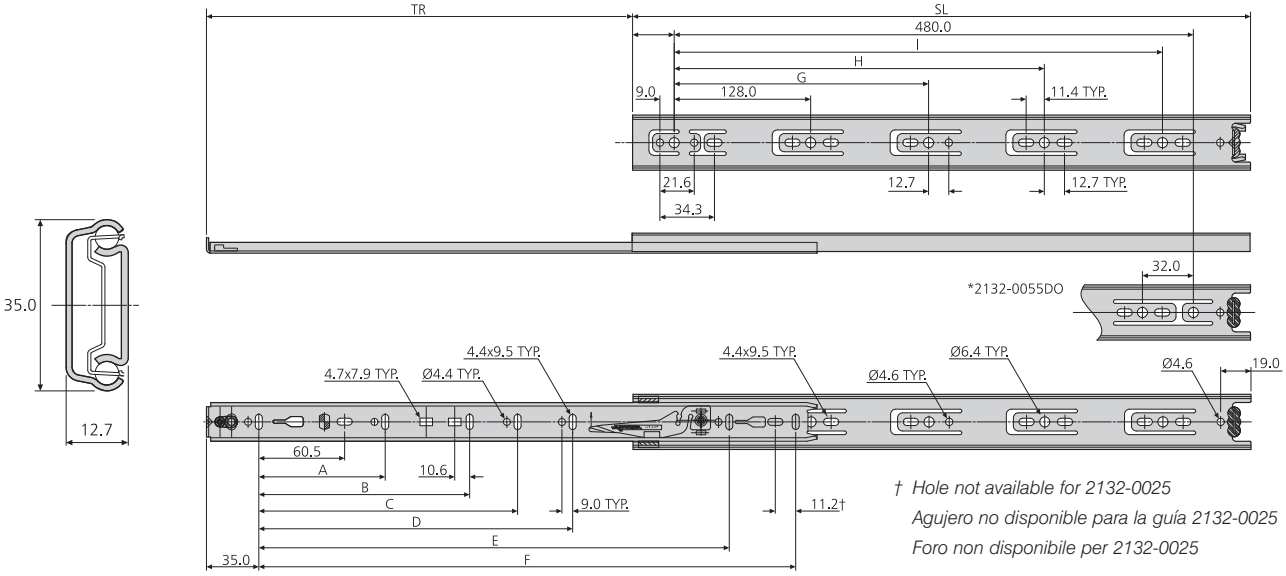

† *Hole not available for 2132-0025*
Agujero no disponible para la guía 2132-0025
Foro non disponibile per 2132-0025

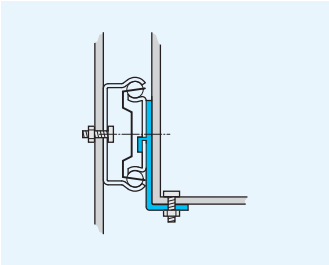

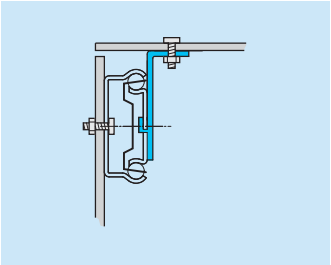

2132DO	mm											kg	
	SL	TR	A	B	C	D	E	F	G	H	I	W	L
DZ2132-0025DO	250	163	96	-	-	-	-	192	-	-	-	0.49	50
DZ2132-0030DO	300	205	96	-	-	-	-	242	224	-	-	0.56	50
DZ2132-0035DO	350	260	128	-	-	-	-	292	224	-	-	0.69	50
DZ2132-0040DO	400	281	128	-	-	-	-	342	224	-	320	0.77	45
DZ2132-0045DO	450	331	128	224	-	-	-	392	224	-	352	0.84	45
DZ2132-0050DO	500	376	128	224	-	-	-	442	224	-	416	0.94	45
DZ2132-0055DO	550	415	128	224	320	-	-	492	224	352	*	1.05	40
DZ2132-0060DO	600	451	128	224	320	-	-	542	224	352	480	1.13	40
DZ2132-0065DO	650	488	128	224	320	416	544	592	224	352	544	1.25	35
DZ2132-0070DO	700	526	128	224	288	416	-	642	224	352	544	1.37	35

Notes:

- *Fixing recommendation: M4*
- *For brackets refer to page 59*

Note:

- *Consigli per il fissaggio: vite M4*
- *Per le staffe fare riferimento alla pagina 59*

- Load rating up to 20kg
- 100% extension
- Low profile: only 20mm high

80,000

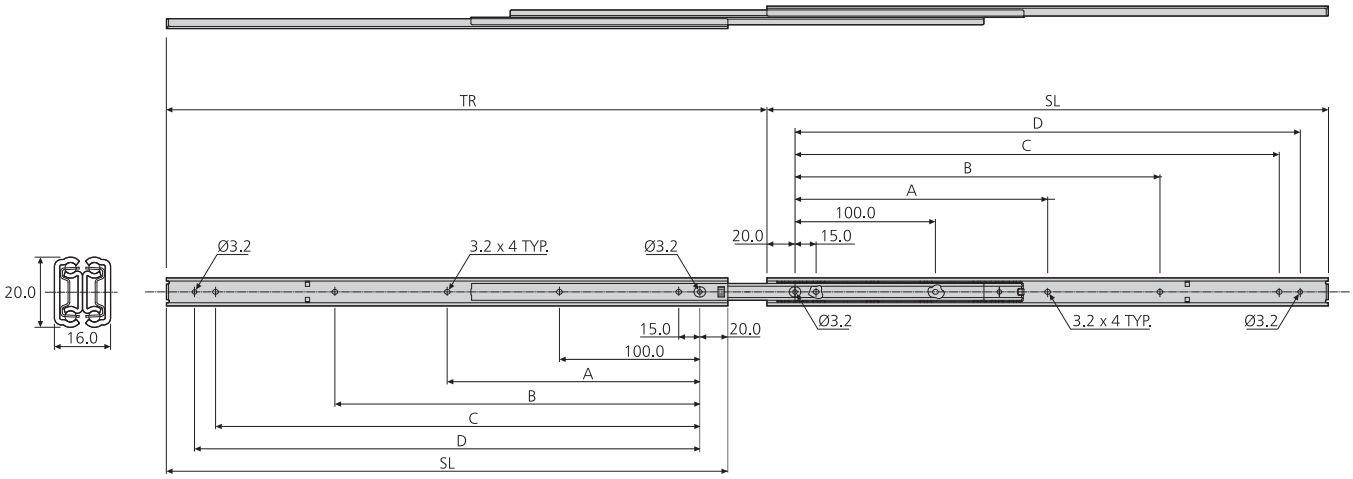

2431	mm						kg	
	SL	TR	A	B	C	D	W	L
DZ2431-0020	200	231	-	-	145.0	160.0	0.461	17
DZ2431-0025	250	280	-	-	195.0	210.0	0.582	19
DZ2431-0030	300	329	-	160.0	245.0	260.0	0.707	20
DZ2431-0035	350	379	-	210.0	295.0	310.0	0.827	20
DZ2431-0040	400	428	-	260.0	345.0	360.0	0.948	18
DZ2431-0045	450	477	205.0	310.0	395.0	410.0	1.073	16
DZ2431-0050	500	526	230.0	360.0	445.0	460.0	1.194	13

Notes:

- *Fixing recommendation: M3 screw*

2632

- Load rating up to 35kg
- 100% extension
- 12.7mm slide thickness
- Low profile
- Hold-in
- Mounting rail
- Fixing hardware included

80,000

† 2632-0020 - 0025 = 12.7mm

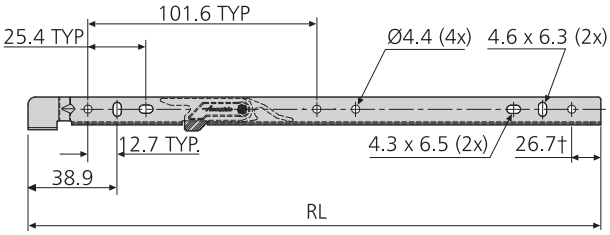

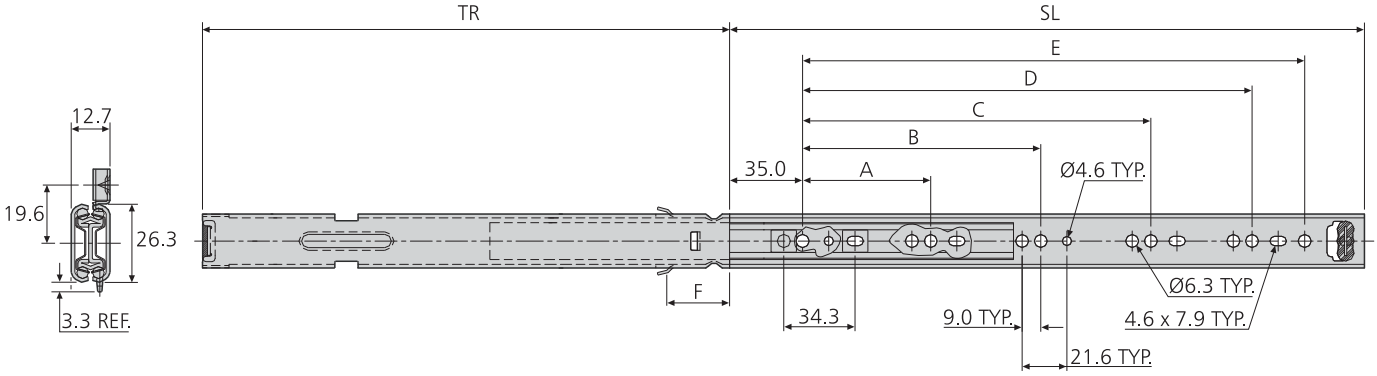

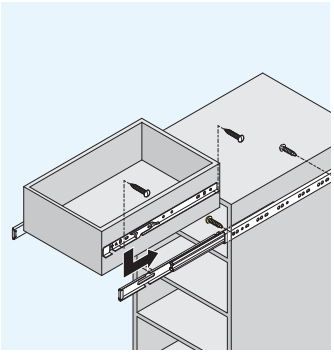

2632	mm								
	SL	TR	RL	A	B	C	D	E	F
DZ2632-0020-2	203	203	165.1	128	-	-	-	-	37.6
DZ2632-0025-2	254	254	165.1	128	-	-	-	-	88.4
DZ2632-0030-2	305	305	273.8	128	224	-	-	-	35.1
DZ2632-0035-2	356	356	273.8	128	224	-	-	-	85.9
DZ2632-0040-2	407	407	337.8	128	224	320	-	-	72.6
DZ2632-0045-2	457	457	337.8	128	224	352	-	-	123.4
DZ2632-0050-2	508	508	433.8	128	224	416	-	-	78.2
DZ2632-0055-2	559	559	433.8	128	224	352	448.1	480.1	129.0

Notes:

- *The mounting rail is screw fixed to the drawer. The mounting rail then sits on the drawer member of the slide and the latch engages the slide as the drawer is dropped on*

3732

- Load rating up to 40kg
- 100% extension
- 12.7mm slide thickness (14mm with mounting bracket)
- Optional clip-on bracket for bottom and platform mounting
- Unhanded push-latch disconnect
- Hold-in

80,000

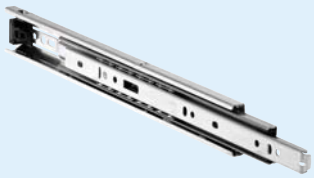

† 3732-0030 = 96mm

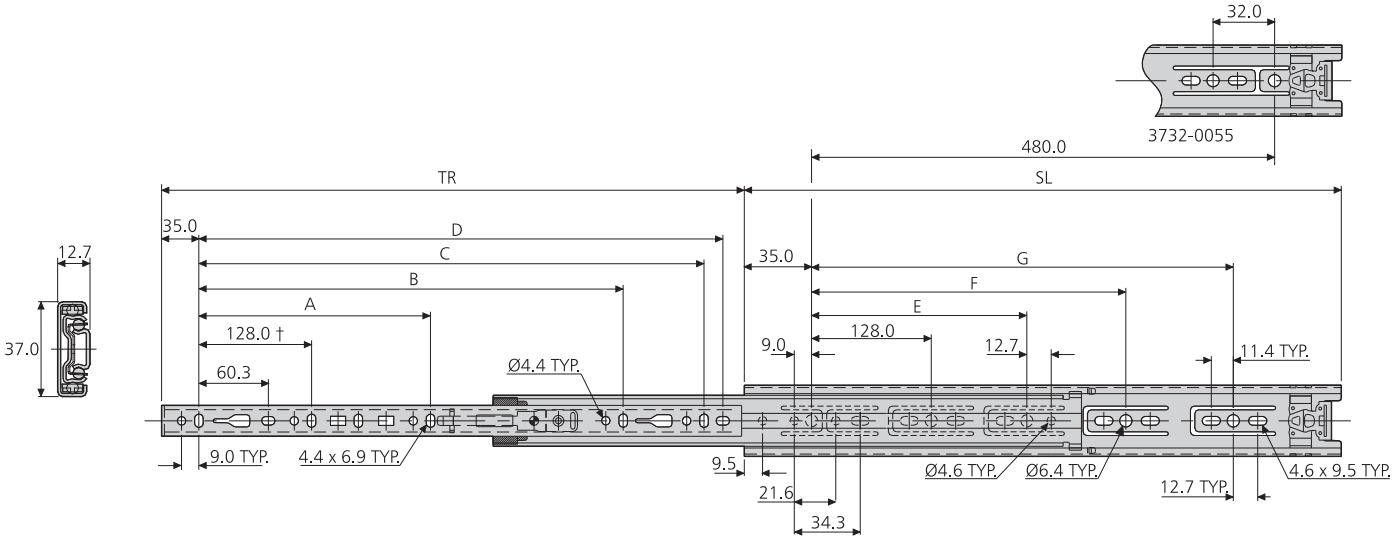

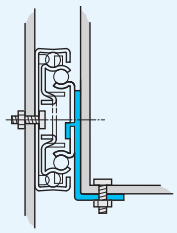

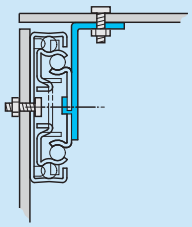

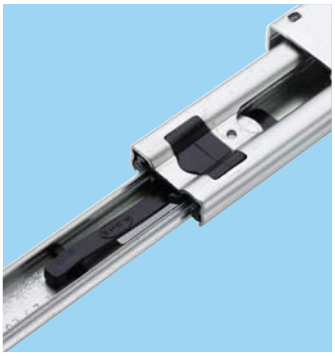

3732	mm								
	SL	TR	A	B	C	D	E	F	G
DZ3732-0030	300	292	-	-	-	230.8	224	-	-
DZ3732-0035	350	356	-	-	-	280.8	224	-	-
DZ3732-0040	400	406	-	-	-	330.8	224	-	320
DZ3732-0045	450	457	-	320	-	380.8	224	-	352
DZ3732-0050	500	508	-	320	-	430.8	224	-	416
DZ3732-0055	550	559	-	320	416	480.8	224	352	-
DZ3732-0060	600	610	224	416	-	530.8	224	352	480
DZ3732-0065	650	660	224	416	544	580.8	224	352	544

Notes:

- *Fixing recommendations: M4 screw*
- *For brackets refer to page 59*
- *Horizontal mounting not recommended*

2601

- Load rating up to 45kg
- 100% extension
- 12.7mm slide thickness
- Low profile - only 26.3mm high
- Hold-in

80,000

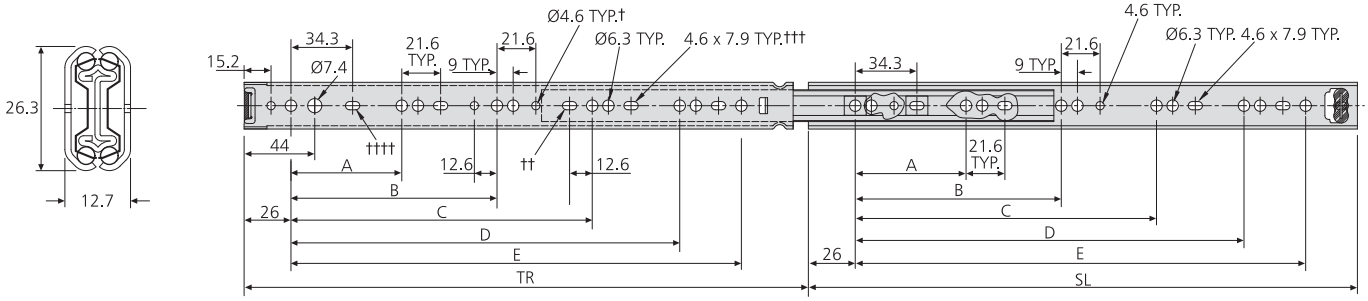

† *Hole not available for 2601-0030*
Agujero no disponible para la guía 2601-0030
Foro non disponibile per 2601-0030

†† *2601-0040*

††† *Hole not available for 2601-0040*
Agujero no disponible para la guía 2601-0040
Foro non disponibile per 2601-0040

†††† *Hole not available for 2601-0015*
Agujero no disponible para la guía 2601-0015
Foro non disponibile per 2601-0015

2601	mm							kg	
	SL	TR	A	B	C	D	E	W	L
DZ2601-0015	150	147.5	78	-	-	-	-	0.35	12
DZ2601-0020	200	209	128	-	-	-	-	0.46	16
DZ2601-0025	250	259	128	-	-	-	-	0.61	25
DZ2601-0030	300	308	128	224	-	-	-	0.73	35
DZ2601-0035	350	357	128	224	-	-	-	0.85	35
DZ2601-0040	400	406	128	224	320	-	-	0.97	45
DZ2601-0045	450	456	128	224	352	-	-	1.09	45
DZ2601-0050	500	505	128	224	352	416	-	1.21	35
DZ2601-0055	550	554	128	224	352	448	489	1.34	30

Notes:

- *Fixing recommendation: M4 screw/6mm Euro screw. Max. head. ht. 2mm/Ø7.8mm*
- *Horizontal mounting not recommended*

- Load rating up to 45kg
- 100% extension
- 12.7mm slide thickness
- Low profile - only 26.3mm high
- Groove or side mounting option
- Hold-in

10,000

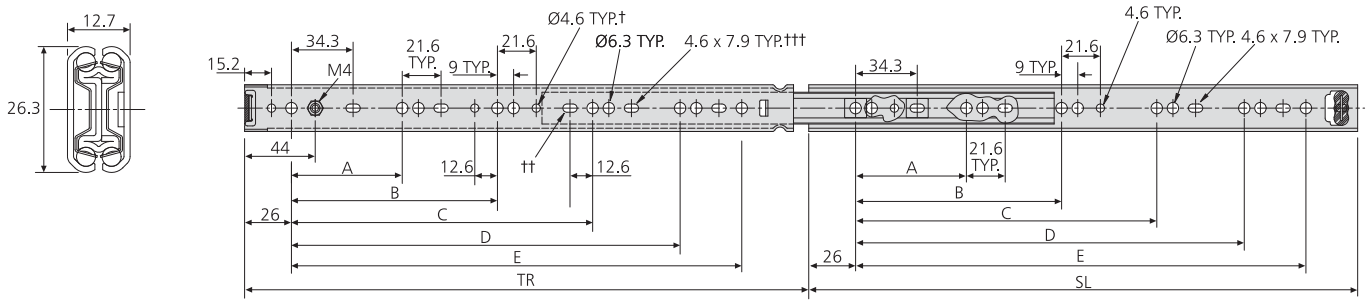

† *Hole not available for 2642-0030*
Agujero no disponible para la guía 2642-0030
Foro non disponibile per 2642-0030

†† *2642-0040*

††† *Hole not available for 2642-0040*
Agujero no disponible para la guía 2642-0040
Foro non disponibile per 2642-0040

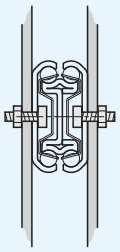

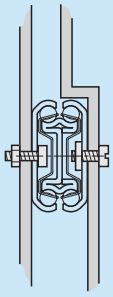

2642	mm							kg	
	SL	TR	A	B	C	D	E	W	L
DZ2642-0020	200	209	128	-	-	-	-	0.46	16
DZ2642-0025	250	259	128	-	-	-	-	0.61	25
DZ2642-0030	300	308	128	224	-	-	-	0.73	35
DZ2642-0035	350	357	128	224	-	-	-	0.85	35
DZ2642-0040	400	406	128	224	320	-	-	0.97	45
DZ2642-0045	450	456	128	224	352	-	-	1.09	45
DZ2642-0050	500	505	128	224	352	416	-	1.21	35
DZ2642-0055	550	554	128	224	352	448	489	1.34	30

Notes:

- *Fixing recommendation: M4 screw/6mm Euro screw. Max. head. ht. 2mm/Ø7.8mm*
- *Horizontal mounting not recommended*

Note:

- *Consigli per il fissaggio: vite M4/vite Euro da 6mm. Altezza max. testa della vite 2mm/Ø7.8mm*
- *Non si consiglia il montaggio orizzontale*

3832TR/3832HDTR

- Touch release - push drawer front to open or close
- Load rating up to 45kg
- Stay-closed feature
- Heavy duty stay-closed option 3832HDTR
- 100% extension
- 12.7mm slide thickness
- Front disconnect
- Hold-in
- Cam drawer adjust (3.2mm)

80,000

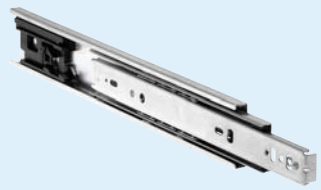

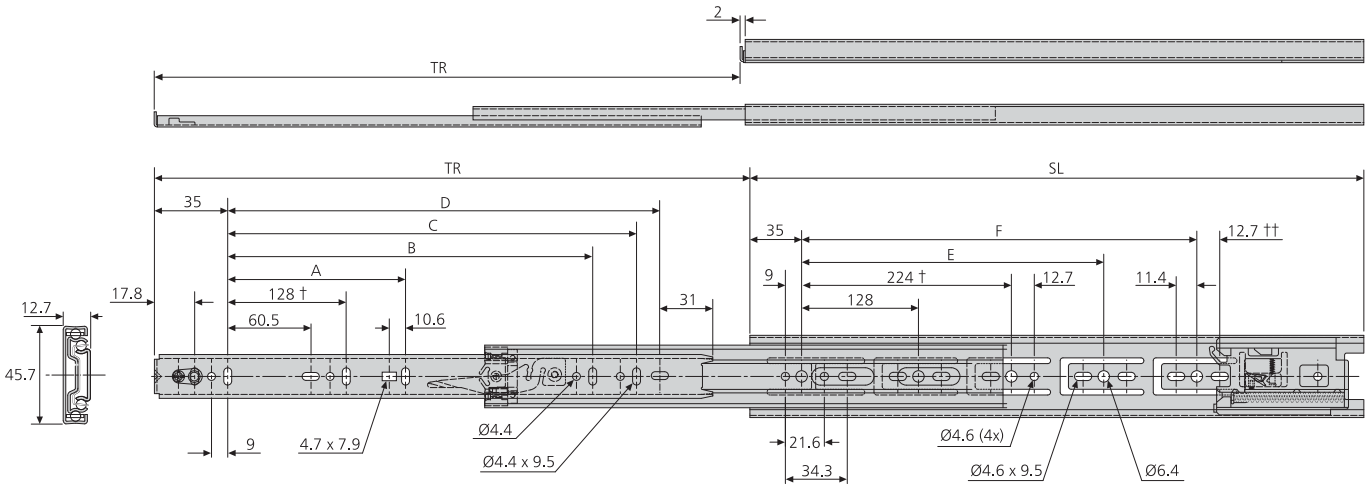

† Hole not available for 3832-0030TR/HDTR

† Agujero no disponible para la guía 3832-0030TR/HDTR

† Foro non disponibile per 3832-0030TR/HDTR

†† Hole not available for 3832-0040/50/60TR/HDTR

†† Agujero no disponible para la guía 3832-0040/50/60TR/HDTR

†† Foro non disponibile per 3832-0040/50/60TR/HDTR

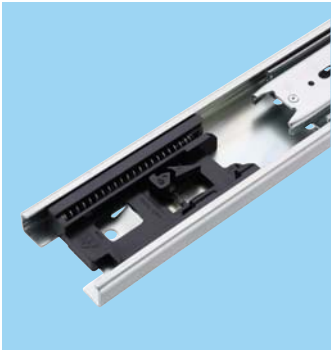

3832TR/3832HDTR

3832TR/ 3832HDTR	mm								kg	
	SL	TR	A	B	C	D	E	F	W	L
*3832-0030TR	300	305	-	-	-	192	-	-	0.95	45
DZ3832-0030HDTR	300	305	-	-	-	192	-	-	0.95	45
*3832-0035TR	350	356	-	-	-	242	-	-	1.10	45
DZ3832-0035HDTR	350	356	-	-	-	242	-	-	1.10	45
*3832-0040TR	400	406	-	-	-	292	288	-	1.27	45
DZ3832-0040HDTR	400	406	-	-	-	292	288	-	1.27	45
*3832-0045TR	450	457	-	320	-	342	320	-	1.34	45
DZ3832-0045HDTR	450	457	-	320	-	342	320	-	1.34	45
*3832-0050TR	500	508	-	320	-	392	384	-	1.42	45
DZ3832-0050HDTR	500	508		320	-	392	384	-	1.42	45
*3832-0055TR	550	559	224	416	-	442	416	-	1.58	45
DZ8328-0055HDTR	550	559	224	416	-	442	416	-	1.58	45
*3832-0060TR	600	610	224	416	-	492	352	480	1.75	45
DZ3832-0060HDTR	600	610	224	416	-	492	352	480	1.75	45
*3832-0065TR	650	660	224	416	512	542	352	512	1.91	45
DZ3832-0065HDTR	650	660	224	416	512	542	352	512	1.91	45
*3832-0070TR	700	711	224	416	512	592	352	544	2.06	45
DZ3832-0070HDTR	700	711	224	416	512	592	352	544	2.06	45

** 3832TR only prefix DZ for bright zinc plate, DB for black zinc plate, DW for white electro-plate*

** 3832TR - solo lleva el prefijo DZ para cinc brillante, DB para negro, DW para blanco*

** 3832TR - solo prefisso DZ per passivazione brillante, DB per passivazione nera, DW per bianco*

Notes:

- *Fixing recommendation: M4 screw*
- *Drawer opens 50mm - 125mm when pushed in*
- *Use for side (vertical) mount only*
- *Drawer width should not exceed slide length*
- *Not for lateral file drawer applications or where the drawer is wider than it is deep*

3832EC

- Soft close
- Load rating up to 45kg
- 100% extension
- 12.7mm slide thickness
- Front disconnect
- Hold-in
- Cam drawer adjust (3.2mm)

50,000

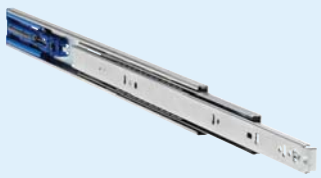

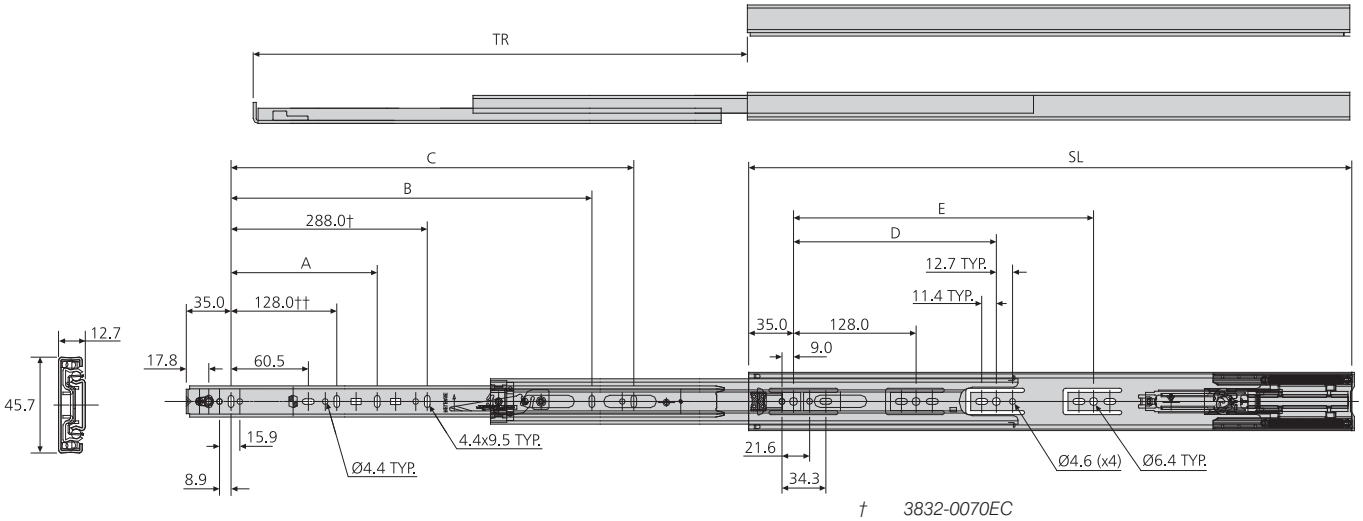

† 3832-0070EC

†† Hole not available for 3832-0035EC
Agujero no disponible para la guía 3832-0035EC
Foro non disponibile per 3832-0035EC

3832EC	mm						
	SL	TR	A	B	C	D	E
*3832-0035EC	350	310	-	206	-	-	-
*3832-0040EC	400	406	-	257	-	-	-
*3832-0045EC	450	457	-	305	-	224	-
*3832-0050EC	500	508	-	320	-	224	-
*3832-0055EC	550	559	-	407	320	224	-
*3832-0060EC	600	610	224	-	416	224	352
*3832-0065EC	650	660	224	-	416	224	352
*3832-0070EC	700	711	224	416	544	224	352

** Prefix DZ for bright zinc plate, DB for black zinc plate, DW for white electro-plate*

** Prefijo DZ para cinc brillante, DB para negro, DW para blanco*

** Prefisso DZ per passivazione brillante, DB per passivazione nera, DW per bianco*

Notes:

- *The side space allowance must be 13.5-14 mm for the slide to work correctly*
- *Fixing recommendation: M4 screw*
- *Use for side (vertical) mount only*
- *Drawer width should not exceed slide length*
- *Not for lateral file drawer applications or where the drawer is wider than it is deep*

- Load rating up to 50kg
- 100% extension
- 12.7mm slide thickness (14mm with mounting bracket)
- Optional clip-on bracket for bottom & platform mounting
- Front disconnect
- Hold-in
- Cam drawer adjust (3.2mm)

10,000

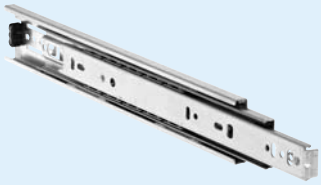

† 3832-0015, 3832-0025, 3832-0030 = 96mm

‡ Hole not available for 3832-0015, 3832-0020, 3832-0025
Agujero no disponible para la guía 3832-0015, 3832-0020, 3832-0025
Foro non disponibile per 3832-0015, 3832-0020, 3832-0025

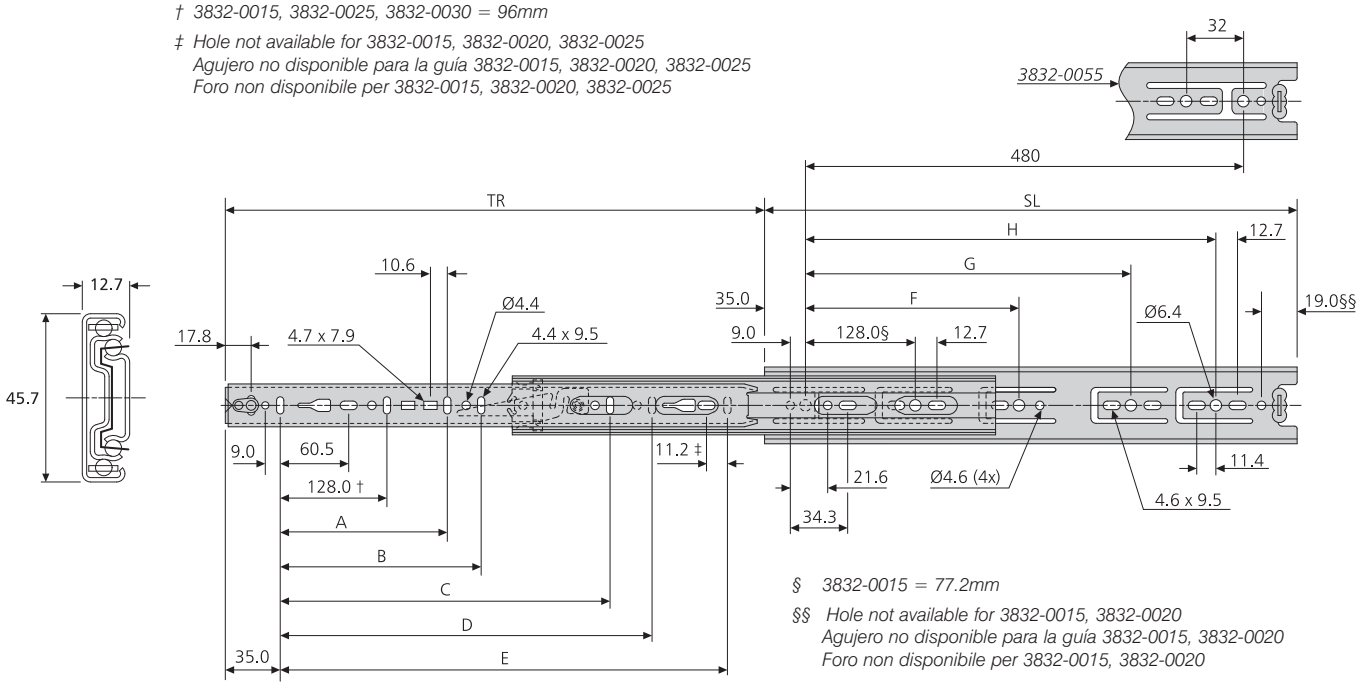

§ 3832-0015 = 77.2mm

§§ Hole not available for 3832-0015, 3832-0020
Agujero no disponible para la guía 3832-0015, 3832-0020
Foro non disponibile per 3832-0015, 3832-0020

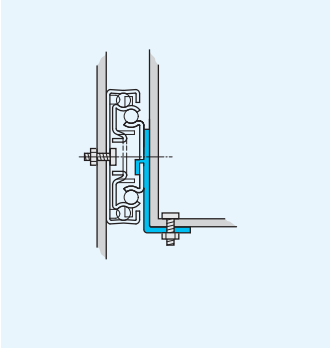

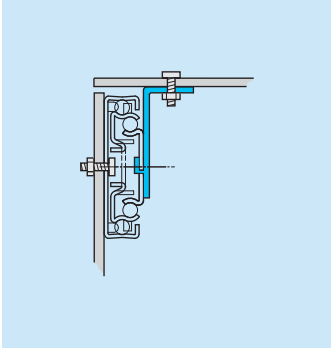

3832

3832	mm										kg	
	SL	TR	A	B	C	D	E	F	G	H	W	L
*3832-0015	148	140	-	-	-	-	-	-	-	-	0.44	50
*3832-0020	199	203	-	-	-	-	141	-	-	-	0.62	50
*3832-0025	250	243	-	-	-	-	192	-	-	-	0.79	50
*3832-0030	300	305	-	-	-	-	242	224	-	-	0.95	50
*3832-0035	350	356	-	-	-	-	292	224	-	-	1.1	50
*3832-0040	400	406	-	-	-	-	342	224	320	-	1.27	50
*3832-0045	450	457	-	-	320	-	392	224	352	-	1.42	50
*3832-0050	500	508	-	-	320	-	442	224	416	-	1.58	50
*3832-0055	550	559	-	-	320	416	492	224	352	448	1.75	50
*3832-0060	600	610	224	-	416	-	542	224	352	480	1.91	50
*3832-0065	650	660	224	-	416	544	592	224	352	544	2.06	50
*3832-0070	700	711	224	288	416	544	642	224	352	544	2.22	50

** Prefix DZ for bright zinc plate, DB for black zinc plate, DW for white electro-plate*

** Prefijo DZ para cinc brillante, DB para negro, DW para blanco*

** Prefisso DZ per passivazione brillante, DB per passivazione nera, DW per bianco*

Notes:

- *Fixing recommendation: M4 screw*
- *For brackets refer to page 59*
- *Horizontal mounting not recommended*
- *DW3832 - Load rating up to 45kg*

METALIKA Locking systems KACIN
www.metalika-kacin.com

3832SC/3832HDSC

- Two self close options
- Closing/opening force - SC: 14 - 27N per slide HDSC: 27 - 41N per slide
- Load rating up to 50kg
- 100% extension
- 12.7mm slide thickness (14mm with mounting bracket)
- Optional clip-on bracket for bottom & platform mounting
- Front disconnect
- Hold-in
- Cam drawer adjust (3.2mm)

10,000

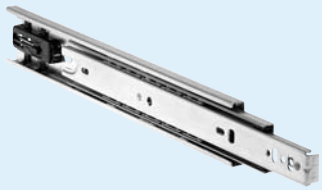

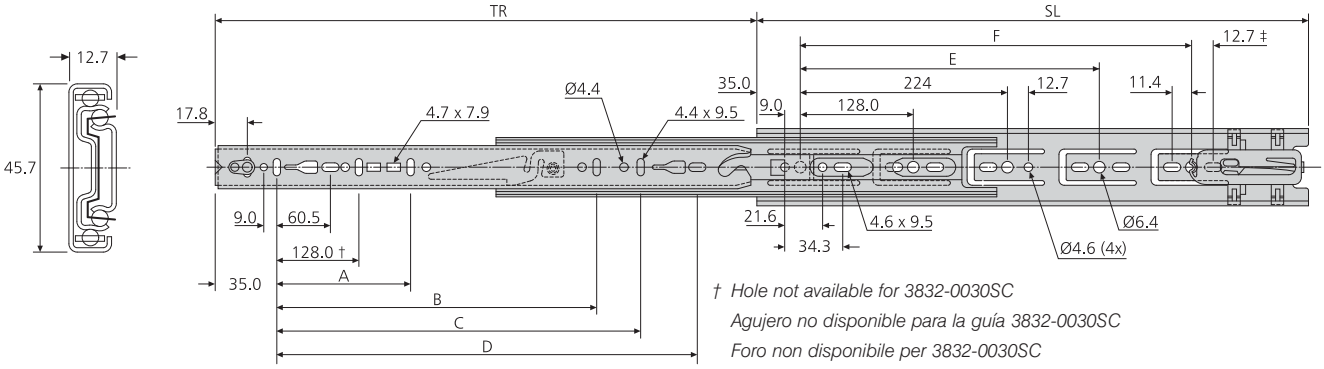

† *Hole not available for 3832-0030SC*
Agujero no disponible para la guía 3832-0030SC
Foro non disponibile per 3832-0030SC

‡ *Hole not available for 3832-0040SC/HDSC & 3832-0050SC/HDSC*
Agujero no disponible para la guía 3832-0040SC/HDSC & 3832-0050SC/HDSC
Foro non disponibile per 3832-0040SC & 3832-0050SC/HDSC

3832SC/ 3832HDSC	mm								kg	
	SL	TR	A	B	C	D	E	F	W	L
*3832-0030SC	300	286	-	-	-	231	-	-	0.95	50
DZ3832-0030HDSC	300	286	-	-	-	231	-	-	0.95	50
*3832-0035SC	350	356	-	-	-	281	-	-	1.1	50
DZ3832-0035HDSC	350	356	-	-	-	281	-	-	1.1	50
*3832-0040SC	400	406	-	-	-	331	288	-	1.27	50
DZ3832-0040HDSC	400	406	-	-	-	331	288	-	1.27	50
*3832-0045SC	450	457	-	320	-	381	320	-	1.42	50
DZ3832-0045HDSC	450	457	-	320	-	381	320	-	1.42	50
*3832-0050SC	500	508	-	-	-	431	384	-	1.58	50
DZ3832-0050HDSC	500	508	-	-	-	431	384	-	1.58	50
*3832-0055SC	550	559	-	416	-	481	416	-	1.75	50
DZ3832-0055HDSC	550	559	-	416	-	481	416	-	1.75	50
*3832-0060SC	600	610	224	416	-	531	352	480	1.91	50
DZ3832-0060HDSC	600	610	224	416	-	531	352	480	1.91	50
*3832-0065SC	650	660	224	416	544	581	352	512	2.06	50
DZ3832-0065HDSC	650	660	224	416	544	581	352	512	2.06	50

** 3832SC only prefix DZ for bright zinc plate, DB for black zinc plate, DW for white electro-plate*
** 3832SC - sólo lleva el prefijo DZ para cinc brillante, DB para negro, DW para blanco*
** 3832SC solo prefisso DZ per passivazione brillante, DB per passivazione nera, DW per bianco*

3832SC/3832HDSC

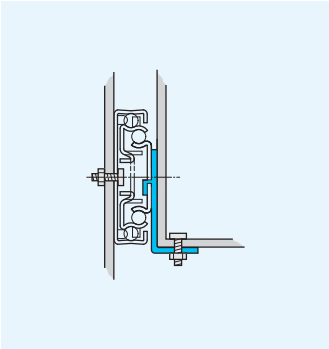

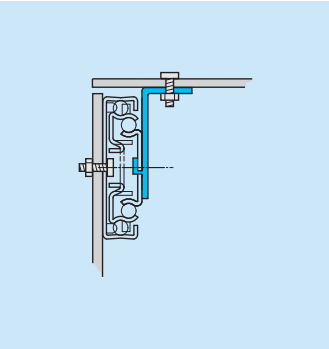

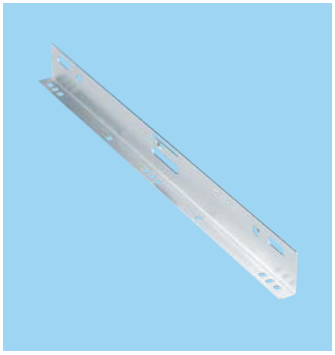

Notes:

- *Fixing recommendation: M4 screw*
- *For brackets refer to page 59*
- *Horizontal mounting not recommended*
- *DW3832SC - Load rating up to 45kg*

3832DO

- Hold-out in open position
- Load rating up to 50kg
- 100% extension
- 12.7mm slide thickness (14mm with mounting bracket)
- Optional clip-on bracket for bottom and platform mounting
- Front disconnect
- Hold-in
- Cam drawer adjust (3.2mm)

10,000

- Trattenimento in posizione di apertura
- Portata fino a 50kg
- Estrazione 100%
- Spessore guida 12,7mm (14mm con staffa di montaggio)
- Staffa opzionale a clip per montaggio sul fondo o su piattaforma
- Sgancio frontale
- Trattenimento in posizione di chiusura
- Regolazione cassetto tramite camma (3,2mm)

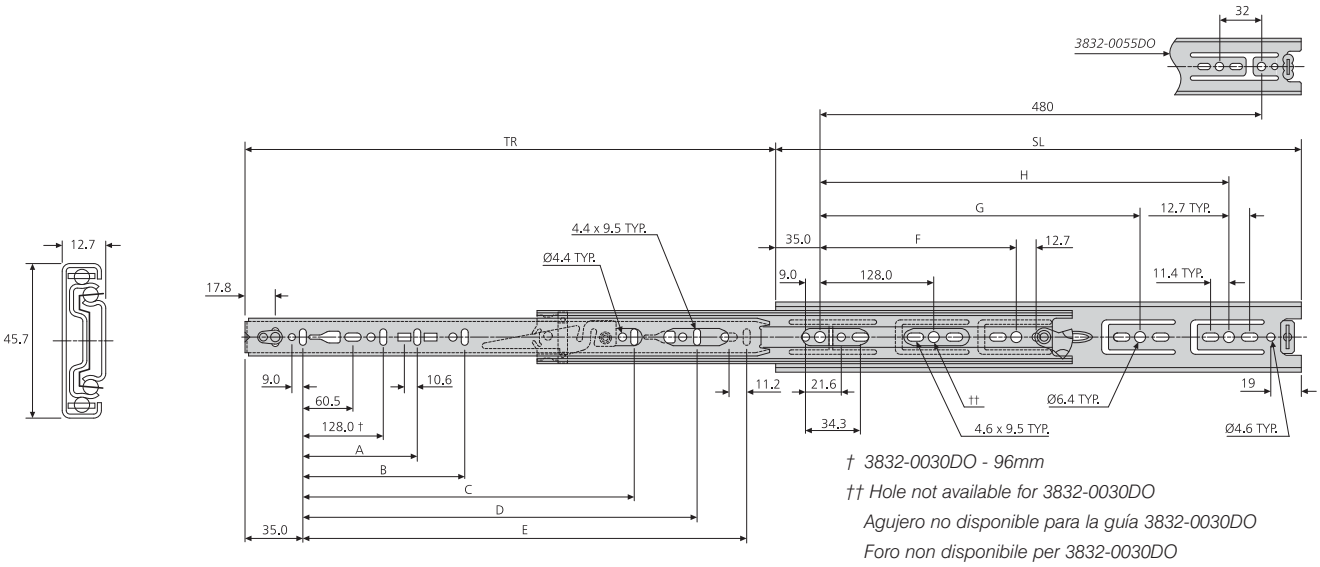

† 3832-0030DO - 96mm

†† Hole not available for 3832-0030DO

Agujero no disponible para la guía 3832-0030DO

Foro non disponibile per 3832-0030DO

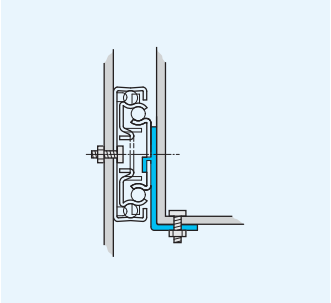

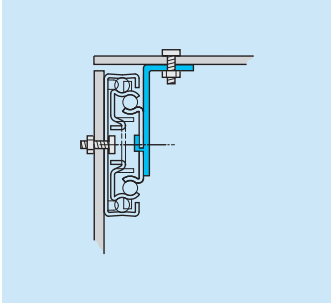

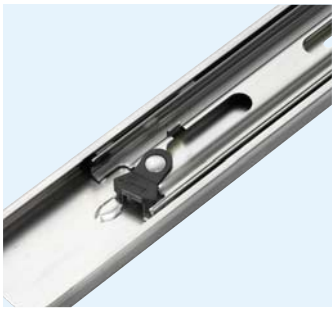

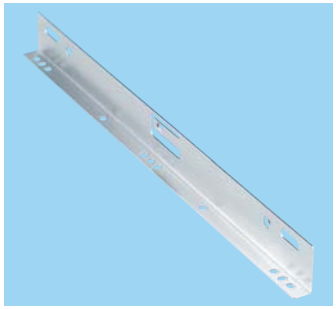

3832DO

3832DO	mm										kg	
	SL	TR	A	B	C	D	E	F	G	H	W	L
DZ3832-0030DO	300	305	-	-	-	-	242	224	-	-	0.95	50
DZ3832-0035DO	350	356	-	-	-	-	292	224	-	-	1.1	50
DZ3832-0040DO	400	406	-	-	-	-	342	224	320	-	1.27	50
DZ3832-0045DO	450	457	-	-	320	-	392	-	352	-	1.42	50
DZ3832-0050DO	500	508	-	-	320	-	442	-	416	-	1.58	50
DZ3832-0055DO	550	559	-	-	320	416	492	-	352	-	1.75	50
DZ3832-0060DO	600	610	224	-	416	-	542	224	352	480	1.91	50
DZ3832-0065DO	650	660	224	-	416	544	592	224	352	544	2.06	50
DZ3832-0070DO	700	711	224	288	416	544	642	224	352	544	2.22	50

Notes:

- *Fixing recommendation: M4 screw*
- *For brackets refer to page 59*
- *Horizontal mounting not recommended*

DH3832

- Corrosion resistant for harsh environments
- Load rating up to 50kg
- 100% extension
- 12.7mm slide thickness
- 8 times more protection than regular zinc finish
- Stainless steel ball retainer, ball bearings and rivets
- Hold-in
- Front disconnect
- Cam drawer adjust (3.2mm)

10,000

† 3832-0015, 3832-0025, 3832-0030 = 96mm

‡ Hole not available for 3832-0015, 3832-0020, 3832-0025
Agujero no disponible para la guía 3832-0015, 3832-0020, 3832-0025
Foro non disponibile per 3832-0015, 3832-0020, 3832-0025

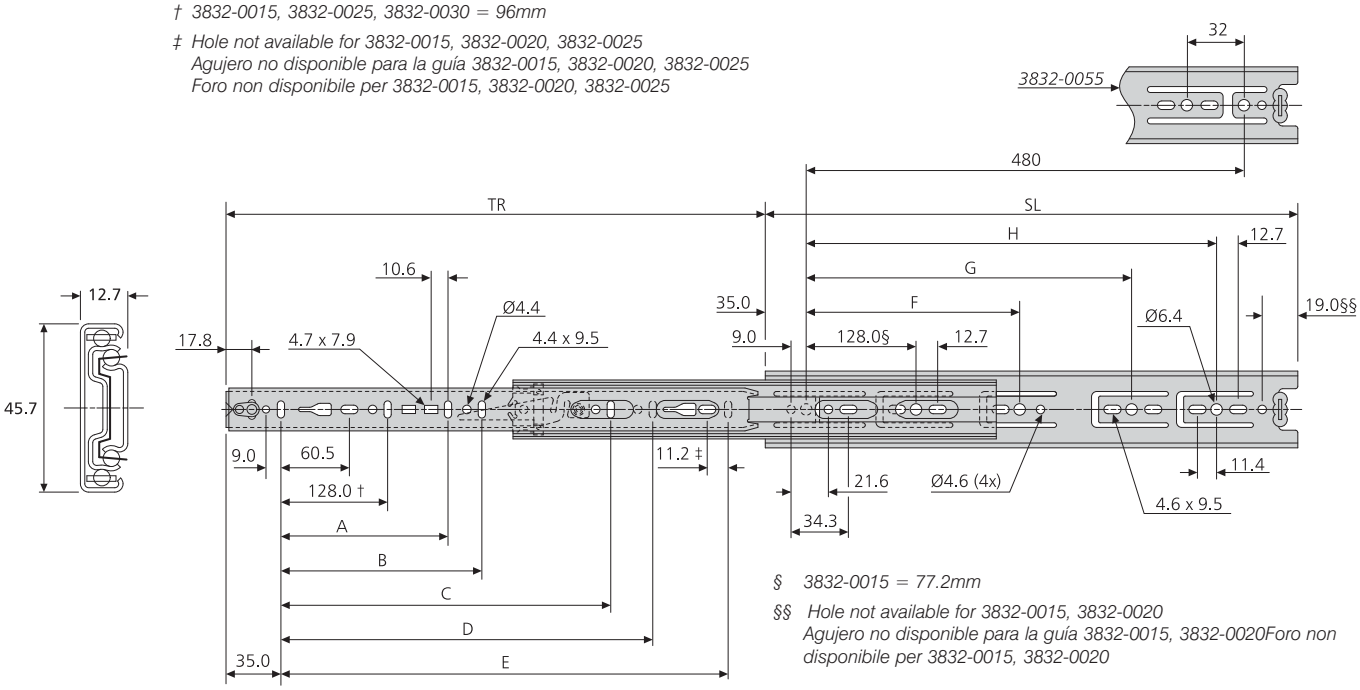

§ 3832-0015 = 77.2mm

§§ Hole not available for 3832-0015, 3832-0020
Agujero no disponible para la guía 3832-0015, 3832-0020Foro non disponibile per 3832-0015, 3832-0020

DH3832

DH3832	mm										kg	
	SL	TR	A	B	C	D	E	F	G	H	W	L
DH3832-0015	148	140	-	-	-	-	-	-	-	-	0.44	50
DH3832-0020	199	203	-	-	-	-	141	-	-	-	0.62	50
DH3832-0025	250	243	-	-	-	-	192	-	-	-	0.79	50
DH3832-0030	300	305	-	-	-	-	242	224	-	-	0.95	50
DH3832-0035	350	356	-	-	-	-	292	224	-	-	1.1	50
DH3832-0040	400	406	-	-	-	-	342	224	320	-	1.27	50
DH3832-0045	450	457	-	-	320	-	392	224	352	-	1.42	50
DH3832-0050	500	508	-	-	320	-	442	224	416	-	1.58	50
DH3832-0055	550	559	-	-	320	416	492	224	352	448	1.75	50
DH3832-0060	600	610	224	-	416	-	542	224	352	480	1.91	50
DH3832-0065	650	660	224	-	416	544	592	224	352	544	2.06	50
DH3832-0070	700	711	224	288	416	544	642	224	352	544	2.22	50

Notes:

- *Fixing recommendation: M4 screw*
- *Horizontal mounting not recommended*

- Clip-on bracket for 2109, 2132, 3732 and 3832 series slides
- Bottom and platform mounting options

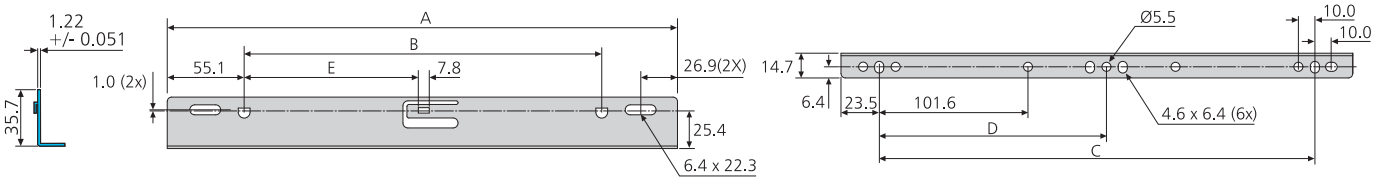

2132

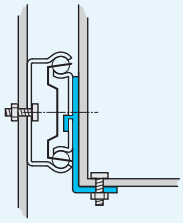

2132

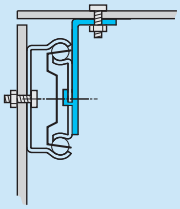

3832

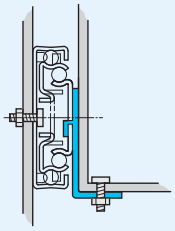

3832

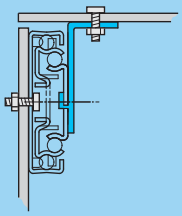

633xx	mm					
	Slide/Guías/Guida	A	B	C	D	E
*63335-2	3832-35	346.7	236.5	300.0	150.0	114.4
*63340-2	3832-40 2132-40	396.7	286.6	350.0	175.0	139.4
*63345-2	3832-45 2132-45/60/65/70	446.8	336.6	400.0	200.0	164.4
*63350-2	3832-50 2132-50	496.8	386.6	450.0	225.0	189.4
*63355-2	3832-55/60/65/70 2132-55	546.8	436.6	500.0	250.0	214.4

** Prefix DZ for zinc plate, DB for black zinc plate, DW for white electro-plate*

** Prefijo DZ para placa de cinc brillante, DB para placa negra, DW para placa galvanizada blanca*

** Prefisso DZ per zincatura brillante, DB per cromatura nera, DW per elettroplaccatura bianca*

Notes:

- *Fixing recommendation: M4 screw*
- *Not 3832TR/HDTR/EC*

7400-50SC

- Self-close (lengths 500-700mm)
- Load rating up to 45kg
- 100%+ extension
- 13mm slide thickness
- Hold-in
- Bayonet mounting

80,000

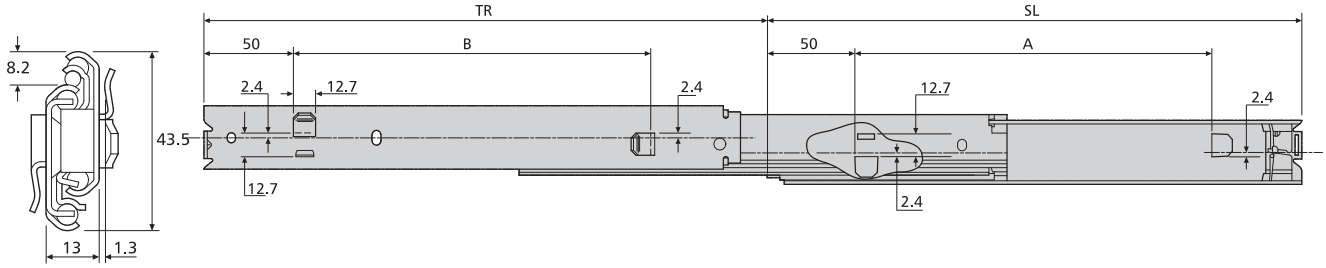

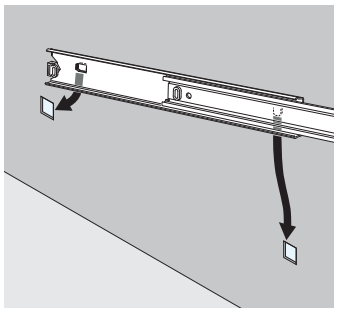

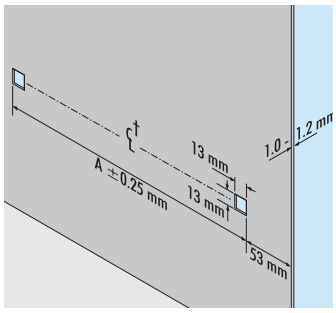

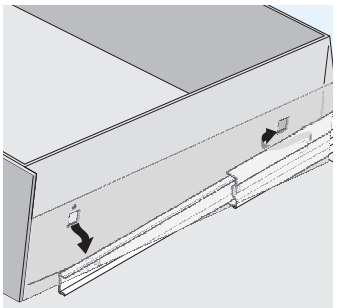

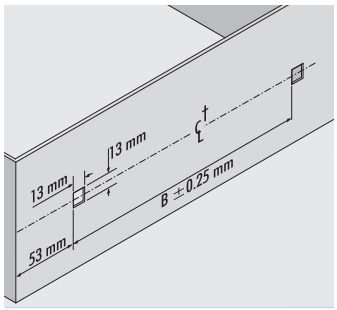

7400-50	mm				kg	
	SL	TR	A	B	W	L
DZ7400-5030-2	300	314	200	200	1.05	40
DZ7400-5035-2	350	364	250	250	1.23	41
DZ7400-5040-2	400	414	300	300	1.41	42
DZ7400-5045-2	450	464	350	350	1.59	45
DZ7400-5050SC-2	500	512.5	325	325	1.65	45
DZ7400-5055SC-2	550	562.5	375	375	1.73	43
DZ7400-5060SC-2	600	612.5	425	425	2.00	41
DZ7400-5065SC-2	650	662.5	475	475	2.20	39
DZ7400-5070SC-2	700	712.5	525	525	2.37	38

Notes:

- *Self-close is only available on lengths 500-700mm*
- *Bayonet mounting for metal cabinets and chassis walls of between 1.0-1.2mm thickness*

METALIKA Locking systems KACIN
www.metalika-kacin.com

DA5321

- Aluminium
- Load rating up to 50kg
- 100%+ extension
- 19.1mm slide thickness
- Stainless steel ball retainer and ball bearings
- Hold-in

40,000

Aluminium
Aluminio
Alluminio

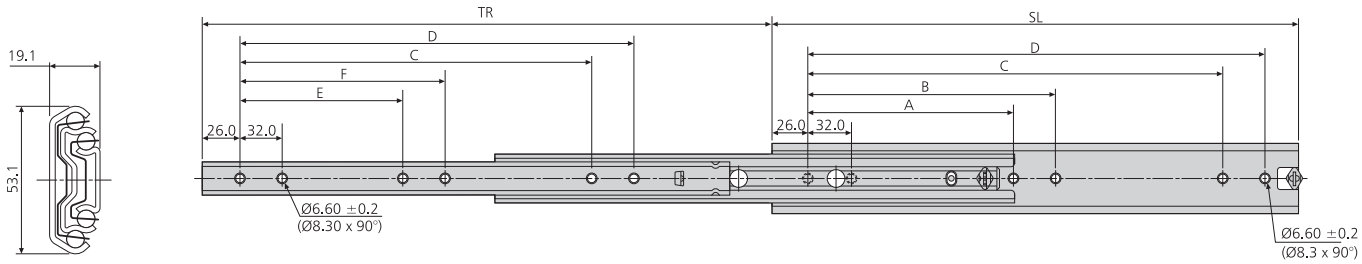

DA5321	mm								kg	
	SL	TR	A	B	C	D	E	F	W	L
DA5321-0030	300	323.5	-	-	192	224	-	-	0.72	40
DA5321-0035	350	373.5	-	-	224	256	-	-	0.85	43
DA5321-0040	400	423.5	160	192	288	320	128	160	0.98	45
DA5321-0045	450	473.5	160	192	320	352	128	160	1.11	48
DA5321-0050	500	523.5	192	224	384	416	160	192	1.24	50
DA5321-0055	550	573.5	192	224	416	448	160	192	1.38	50
DA5321-0060	600	623.5	256	288	480	512	192	256	1.52	50
DA5321-0065	650	673.5	256	288	544	576	192	256	1.66	50
DA5321-0070	700	723.5	288	320	576	608	256	288	1.80	50
DA5321-0080	790	803.5	352	384	672	704	320	352	2.08	40

Notes:

- *Fixing recommendation: M5 countersunk/ 6mm countersunk Euro screw*

Note:

- *Consigli per il fissaggio: vite M5 a testa svasata/ vite Euro a testa svasata da 6mm*

Medium duty slides, load rating 51 - 99kg

Guías de carga media, carga 51 - 99kg

Guide per impieghi normali, portata 51 - 99kg

Model	Load Kg	Travel	Disconnect	Page
Modelo	Carga	Recorrido	Desconexión	Página
Modello	Portata	Corsa	Sgancio	Pagina
0115RS	60	Linear		64
0204	65	75%	●	65
DS2028	65	75%		66
DS0330	65	100%		67
2907	55	100%+	●	68
2907WB	55	100%+	●	69
5517-50	55	100%+		71
3301	68	100%+		72
3307	68	100%+	●	73
3308	68	100%+	●	74
0301	70	100%+		75
0305	70	100%+	●	76

0115RS

- Load rating up to 60kg
- Retainer synchronization
- Precise linear motion through the full travel
- Moving member fully supported on ball bearings at all times
- Slides sold singly

10,000

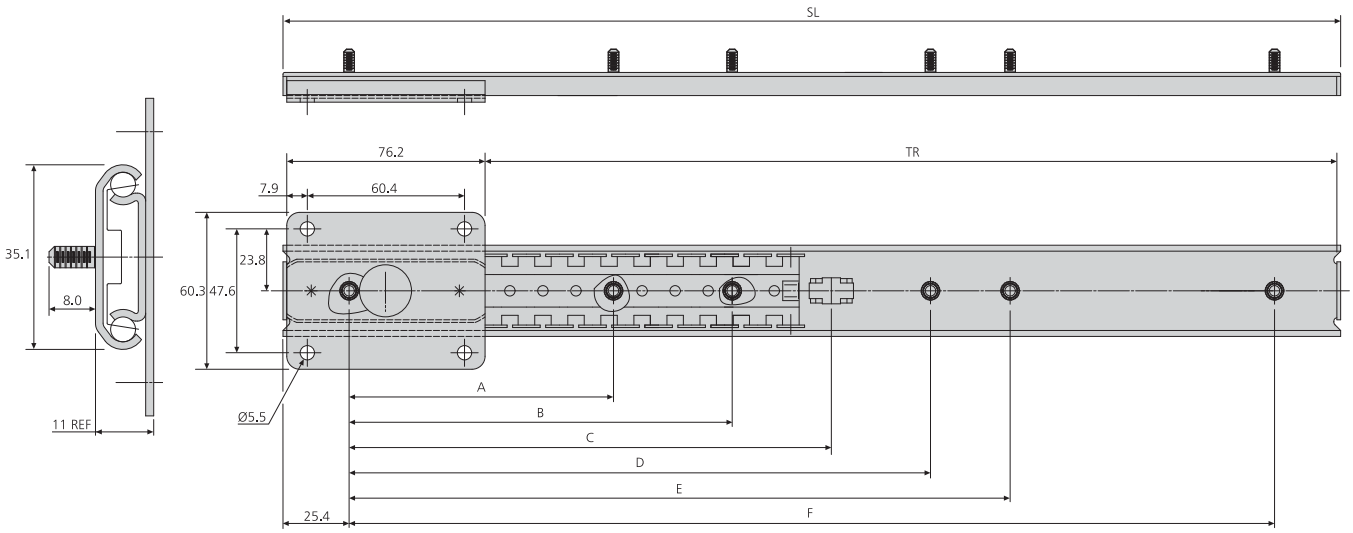

0115RS	mm								kg		
	SL	TR	A	B	C	D	E	F	W	†L*	††L*
DZ0115-0030RS	305	226	88.9	-	127.0	165.1	-	254.0	0.56	60	50
DZ0115-0035RS	356	276	101.6	-	152.4	203.2	-	304.8	0.62	60	50
DZ0115-0040RS	406	327	101.6	-	177.8	254.0	-	355.6	0.68	60	50
DZ0115-0045RS	457	378	127.0	-	203.2	279.4	-	406.4	0.74	60	50
DZ0115-0050RS	508	429	152.4	-	228.6	304.8	-	457.2	0.80	60	50
DZ0115-0055RS	559	480	177.8	-	254.0	330.2	-	508.0	0.94	60	50
DZ0115-0060RS	610	530	101.6	203.2	279.4	355.6	457.2	558.8	1.00	60	50
DZ0115-0065RS	660	581	127.0	254.0	304.8	355.6	482.6	609.6	1.08	60	50
DZ0115-0070RS	711	632	127.0	254.0	330.2	406.4	533.4	660.4	1.12	60	50
DZ0115-0080RS	813	734	152.4	304.8	381.0	457.2	609.6	762.0	1.18	60	50
DZ0115-0090RS	914	835	177.8	355.6	431.8	508.0	685.8	863.6	1.32	60	50
DZ0115-0100RS	1016	937	203.2	406.4	482.6	558.8	762.0	965.2	1.44	60	50

* *Load rating per pair of slides, with the load evenly distributed*
Carga nominal por par de guías, con un peso repartido uniformemente
La portata si intende per coppia di guide con carico uniformemente distribuito

† *Horizontal mount*
Montaje horizontal
Montaggio orizzontale

†† *Vertical mount*
Montaje vertical
Montaggio verticale

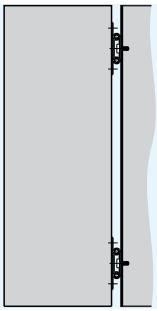

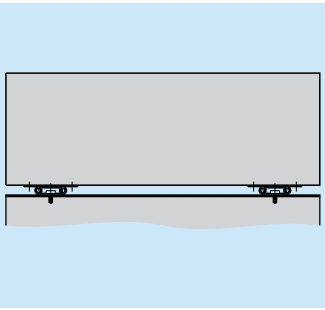

Notes:

- *Fixing recommendation: M5 screw*
- *Can be used upright as a non-load bearing guide*

- Load rating up to 65kg
- 75% extension slide
- 9.5mm slide thickness
- Front disconnect
- Lock-out
- Optional enclosure mounting brackets

10,000

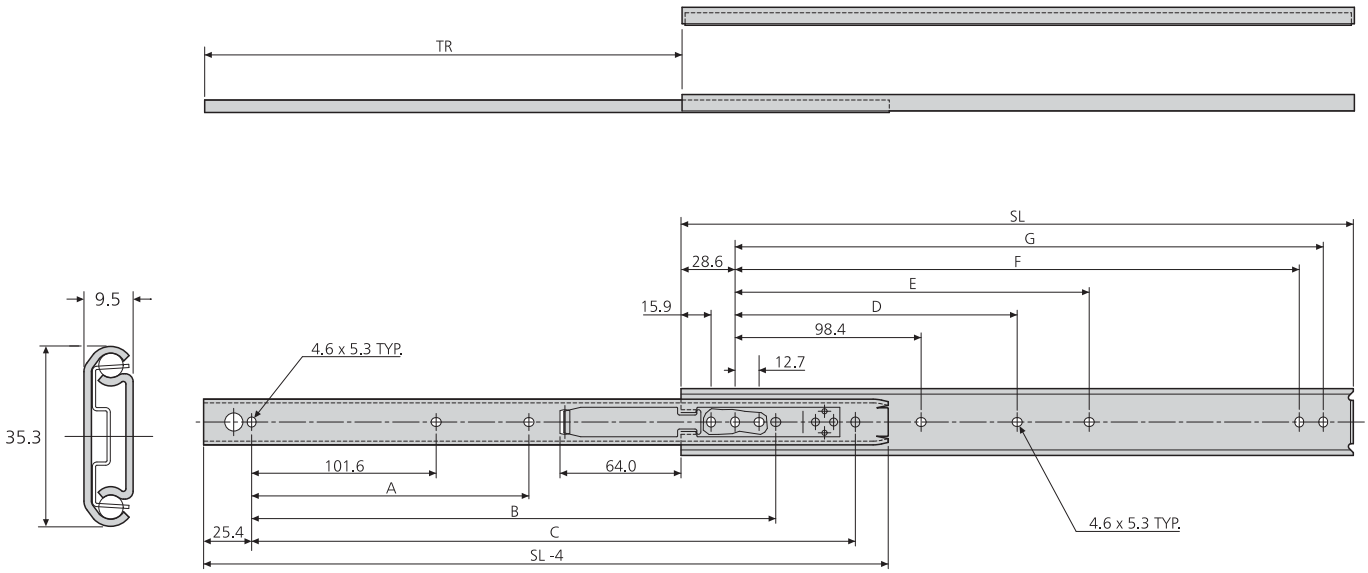

0204	mm									kg	
	SL	TR	A	B	C	D	E	F	G	W	L
DZ0204-0012	305	201.5	-	215.9	254.0	-	136.5	247.6	260.3	0.63	65
DZ0204-0014	356	252.5	-	266.7	304.8	-	187.3	298.4	311.1	0.73	65
DZ0204-0016	406	303.0	-	317.5	355.6	-	238.1	349.2	361.9	0.84	60
DZ0204-0018	457	329.0	203.2	342.9	406.4	200.0	288.9	400.0	412.7	0.94	55
DZ0204-0020	508	379.5	228.6	393.7	457.2	225.4	339.7	450.8	463.5	1.05	50
DZ0204-0022	559	405.0	254.0	419.1	508.0	250.8	390.5	501.6	514.3	1.15	40
DZ0204-0024	610	430.5	279.4	444.5	558.8	276.2	441.3	552.4	565.1	1.27	35
DZ0204-0026	660	481.5	304.8	495.3	609.6	301.6	492.1	603.2	615.9	1.37	30
DZ0204-0028	711	506.5	330.2	520.7	660.4	327.0	542.9	654.0	666.7	1.47	30

Notes:

- *Fixing recommendation: M4 screw*
- *For enclosure mounting brackets refer to page 103*
- *For cable carriers refer to page 101*

DS2028

- High grade stainless steel
- Load rating up to 65kg
- 75% extension
- 9.5mm slide thickness
- Hold-in
- Ideal for environments where mild steel might be subject to corrosion

10,000

Stainless steel
Acero inoxidable
Acciaio inossidabile

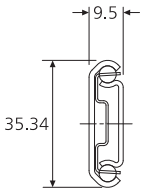

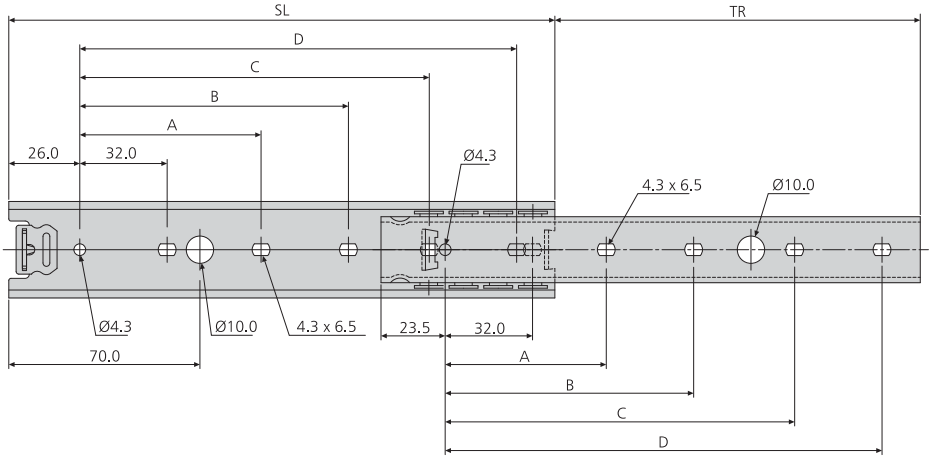

DS2028	mm						kg	
	SL	TR	A	B	C	D	W	L
DS2028-0030	300	209	96	128	224	256	0.54	65
DS2028-0035	350	245	96	128	256	288	0.62	63
DS2028-0040	400	282	160	192	320	352	0.70	59
DS2028-0045	450	320	160	192	384	416	0.80	57
DS2028-0050	500	357	192	224	416	448	0.88	53
DS2028-0055	550	394	192	224	480	512	0.96	50
DS2028-0060	600	432	224	256	512	544	1.02	46
DS2028-0065	650	469	224	256	576	608	1.14	43
DS2028-0070	700	506	256	288	608	640	1.22	42

Notes:

- *Fixing recommendation: M4 screw*

DS0330

- High grade stainless steel
- Load rating up to 65kg
- 100% extension
- 19.1mm slide thickness
- Hold-in
- Ideal for environments where mild steel might be subject to corrosion

80,000

Stainless steel
Acero inoxidable
Acciaio inossidabile

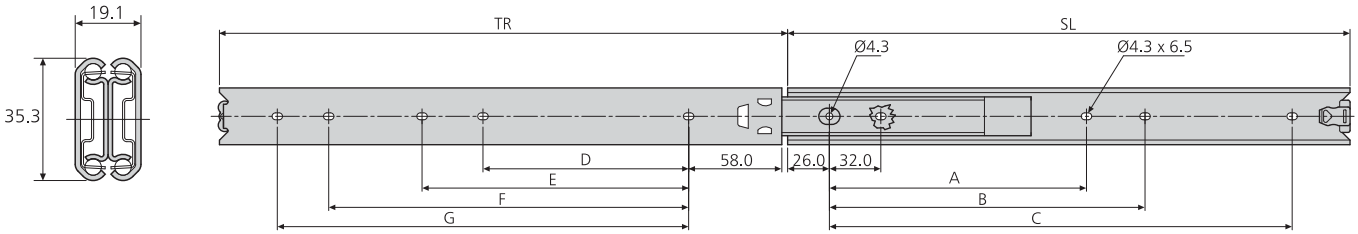

DS0330	mm									kg	
	SL	TR	A	B	C	D	E	F	G	W	L
DS0330-0030	300	304.5	-	192	224	-	-	192	224	1.15	50
DS0330-0035	350	354.0	-	224	256	-	-	224	256	1.36	55
DS0330-0040	400	403.0	-	192	320	160	-	288	320	1.46	55
DS0330-0045	450	452.0	-	224	352	192	-	320	352	1.66	65
DS0330-0050	500	501.0	256	288	416	224	256	384	416	1.88	55
DS0330-0055	550	550.5	288	320	480	256	288	416	448	2.06	50
DS0330-0060	600	600.0	320	352	512	288	320	480	512	2.27	45
DS0330-0070	700	698.0	352	384	608	320	352	576	608	2.70	35

Notes:

- *Fixing recommendation: M4 screw*

Note:

- *Consigli per il fissaggio: vite M4*

2907

- Load rating up to 55kg
- 100% + extension
- 9.6mm slide thickness
- Lock-out
- Front disconnect
- Optional enclosure mounting brackets

10,000

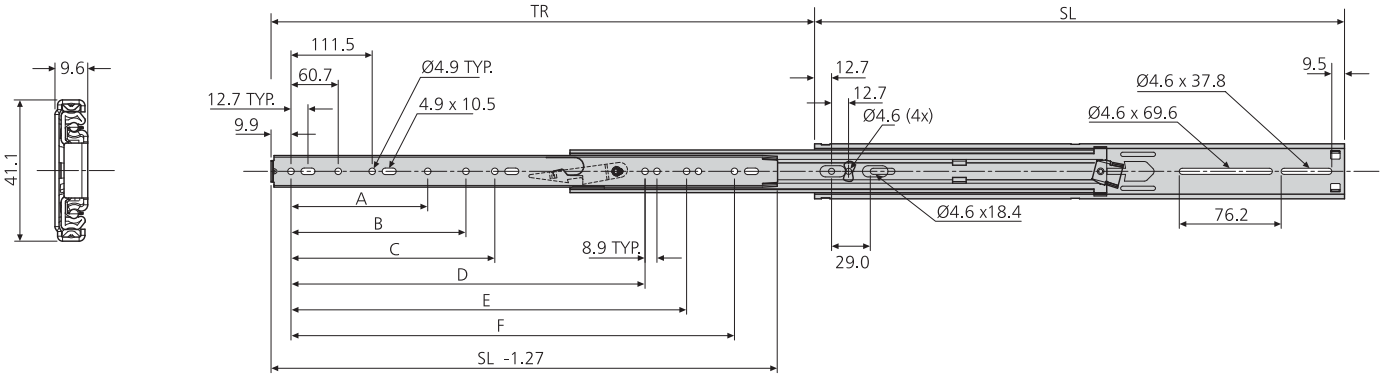

2907	mm								kg	
	SL	TR	A	B	C	D	E	F	W	L
DZ2907-0012	305	356	-	-	-	-	-	235.0	1.2	30
DZ2907-0014	356	406	-	-	-	-	-	285.8	1.4	35
DZ2907-0016	406	457	162.6	-	-	-	-	336.5	1.6	45
DZ2907-0018	457	508	-	-	164.8	314.3	-	387.3	1.8	50
DZ2907-0020	508	559	-	172.1	203.2	356.2	-	438.1	2.0	55
DZ2907-0022	559	610	-	-	213.0	407.0	-	488.9	2.2	55
DZ2907-0024	610	660	254.0	273.7	-	-	457.8	539.7	2.4	50
DZ2907-0026	660	711	140.3	232.4	269.1	416.6	508.6	590.5	2.6	50
DZ2907-0028	711	762	191.1	283.2	304.8	467.4	559.4	641.4	2.8	50
DZ2907-0030	762	813	-	241.9	319.9	518.2	610.2	692.1	3.0	50

Notes:

- *Fixing recommendation: M4 screw*
- *For enclosure mounting brackets refer to page 103*
- *For cable carriers refer to page 101*

2907WB

- White box slide (unbranded servers)
- For 1U to 4U chassis
- Load rating up to 55kg
- 100%+ extension
- 9.6mm slide thickness
- Lock-out
- Front disconnect
- Enclosure mounting brackets included
- Fixing hardware included

2,000

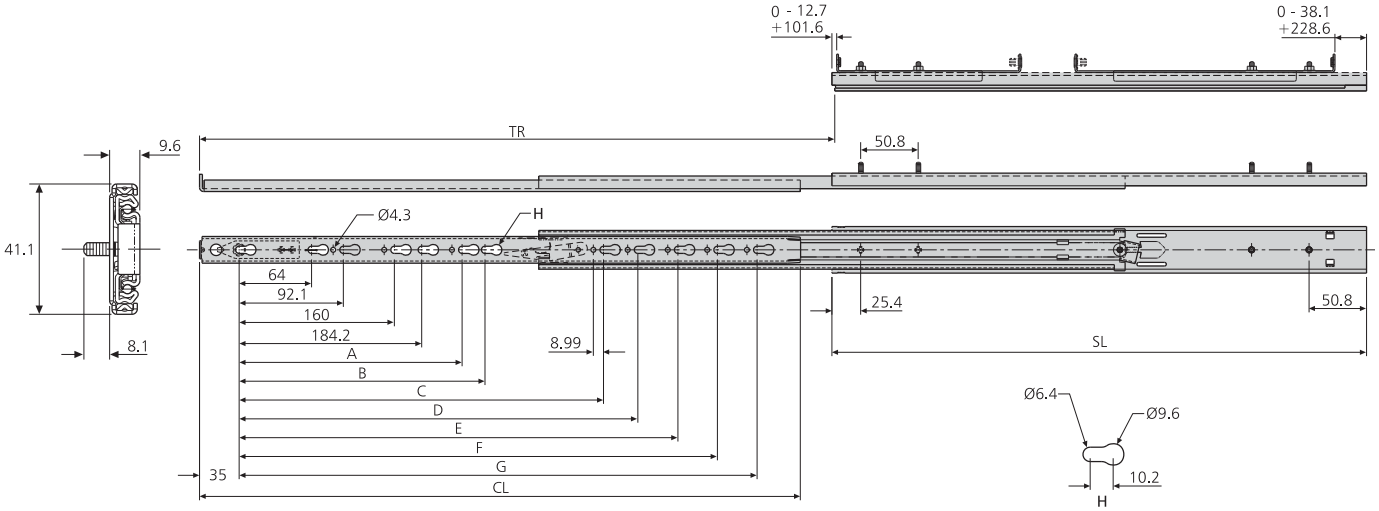

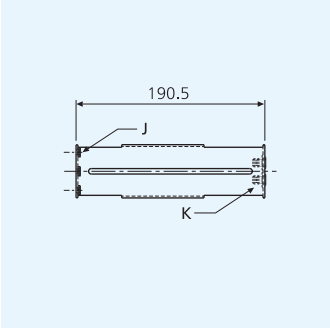

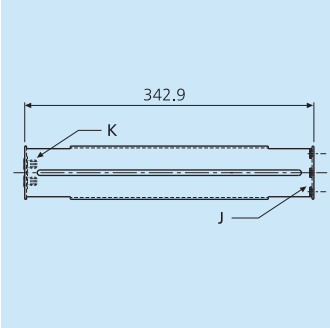

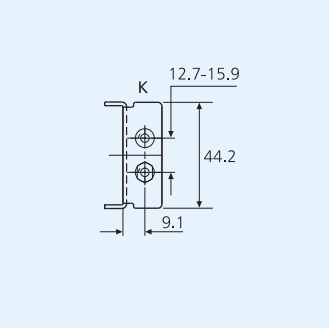

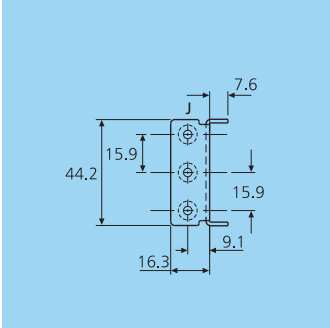

2907WB	mm									
	SL	CL	TR	A	B	C	D	E	F	G
DZ2907-0022WB-2	584	558	610	-	-	368.3	416	460.4	-	-
DZ2907-0024WB-2	635	608	660	-	-	368.3	416	460.4	512	-
DZ2907-0026WB-2	686	659	711	256	276.2	-	416	460.4	512	552.5

2907WB

Notes:

- *Load rating is based on a 406mm wide chassis cycled 2,000 times*
- *Each part number includes:*
  1 pair of slides, 2 x front brackets, 2 x rear brackets, 8 x thumb screws, 8 x keep nuts
- *Fixing recommendation: M4 button head*
- *For a front flush fascia use a No. 8-32 with Fillister head and cage nut.*
- *For cable carriers refer to page 101.*
  Suitability dependent on server depth.

5517-50

- Load rating up to 55kg
- 100% + extension
- 17.5mm slide thickness
- Bayonet mounting
- Hold-in

80,000

- Portata fino a 55kg
- Estrazione 100%+
- Spessore guida 17,5mm
- Montaggio a baionetta
- Trattenimento in posizione di chiusura

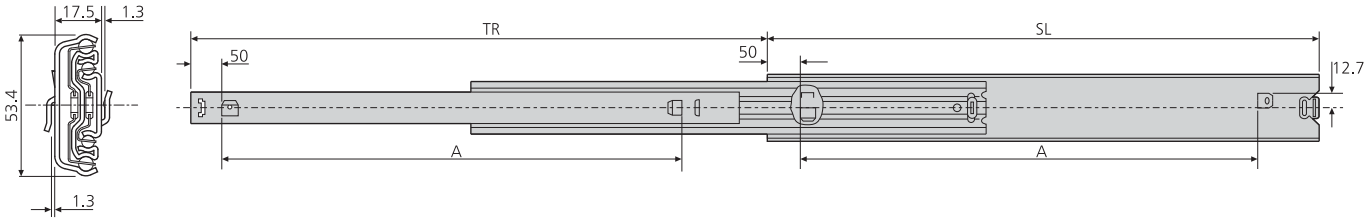

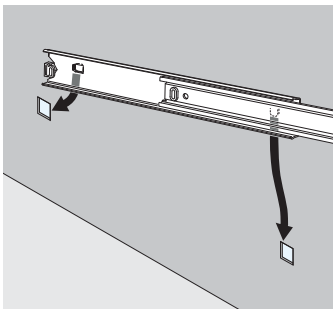

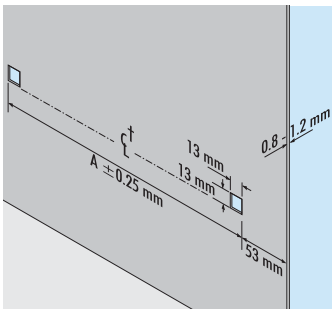

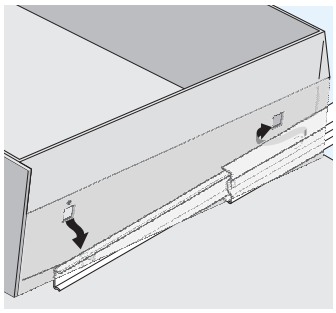

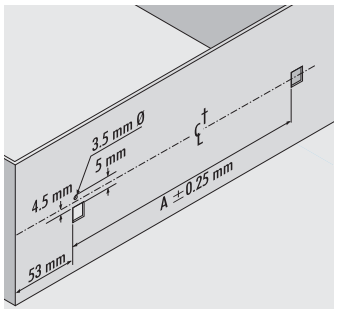

5517-50	mm			kg	
	SL	TR	A	W	L
DZ5517-5035	350	374	250	1.89	55
DZ5517-5040	400	424	300	2.16	55
DZ5517-5045	450	473	350	2.43	55
DZ5517-5050	500	522	400	2.70	55
DZ5517-5055	550	571	450	2.96	55
DZ5517-5060	600	620	500	3.23	55
DZ5517-5070	700	731	600	3.50	55

Notes:

- *Bayonet mounting for metal cabinets and chassis walls of between 0.8 - 1.2mm thickness*

3301

- Load rating up to 68kg
- 100%+ extension
- 12.7mm slide thickness
- Hold-in
- Optional enclosure mounting brackets

10,000

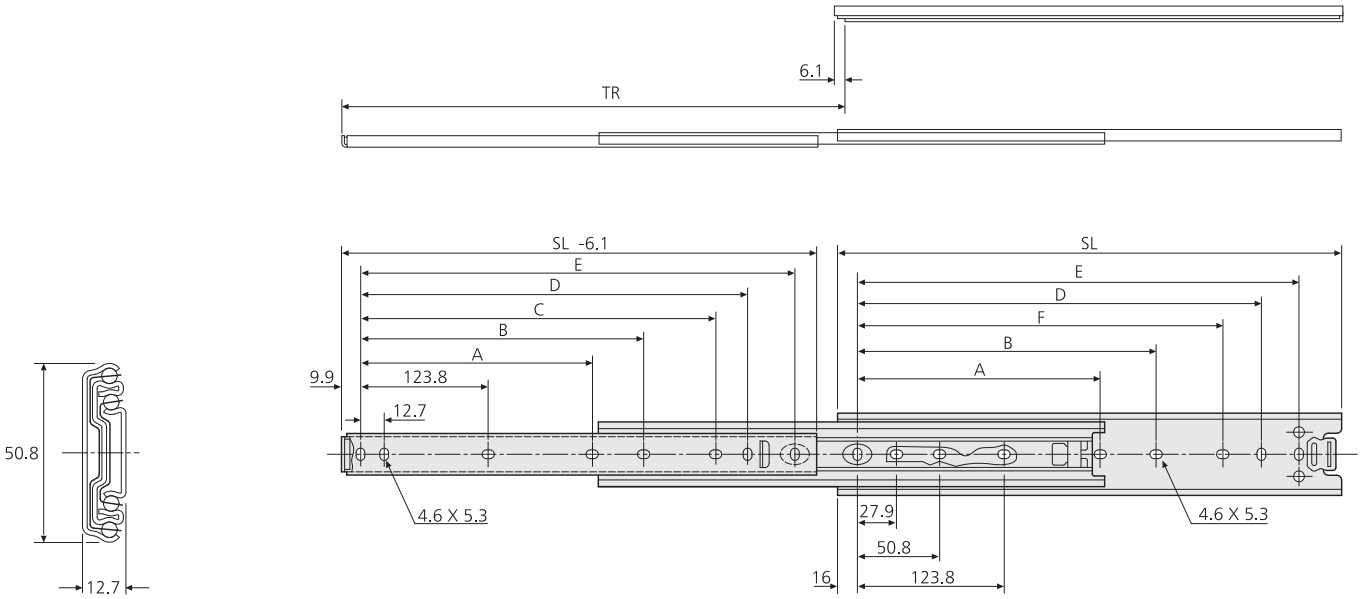

3301	mm								kg	
	SL	TR	A	B	C	D	E	F	W	L
DZ3301-0012-2	305	330	-	162.1	222.2	235.0	260.3	209.5	1.20	68
DZ3301-0014-2	356	381	-	212.8	273.0	285.7	311.1	260.3	1.41	67
DZ3301-0016-2	406	432	-	263.6	323.8	336.5	361.9	311.1	1.59	67
DZ3301-0018-2	457	483	212.8	314.4	374.6	387.3	412.7	361.9	1.82	66
DZ3301-0020-2	508	533	238.2	365.2	425.4	438.1	463.5	412.7	2.00	66
DZ3301-0022-2	559	584	263.6	416.0	476.2	488.9	514.3	463.5	2.23	64
DZ3301-0024-2	610	635	289.0	466.8	527.0	539.7	565.1	514.3	2.41	61
DZ3301-0026-2	660	686	314.4	517.6	577.8	590.5	615.9	565.1	2.64	58
DZ3301-0028-2	711	737	339.8	568.4	628.6	641.3	666.7	615.9	2.81	55

Notes:

- *Fixing hardware included or M4 screws are recommended*
- *For enclosure mounting brackets refer to page 103*
- *For cable carriers refer to page 101*

- Load rating up to 68kg
- 100%+ extension
- 12.7mm slide thickness
- Front disconnect
- Lock-out
- Fixing hardware included
- Optional enclosure mounting brackets

10,000

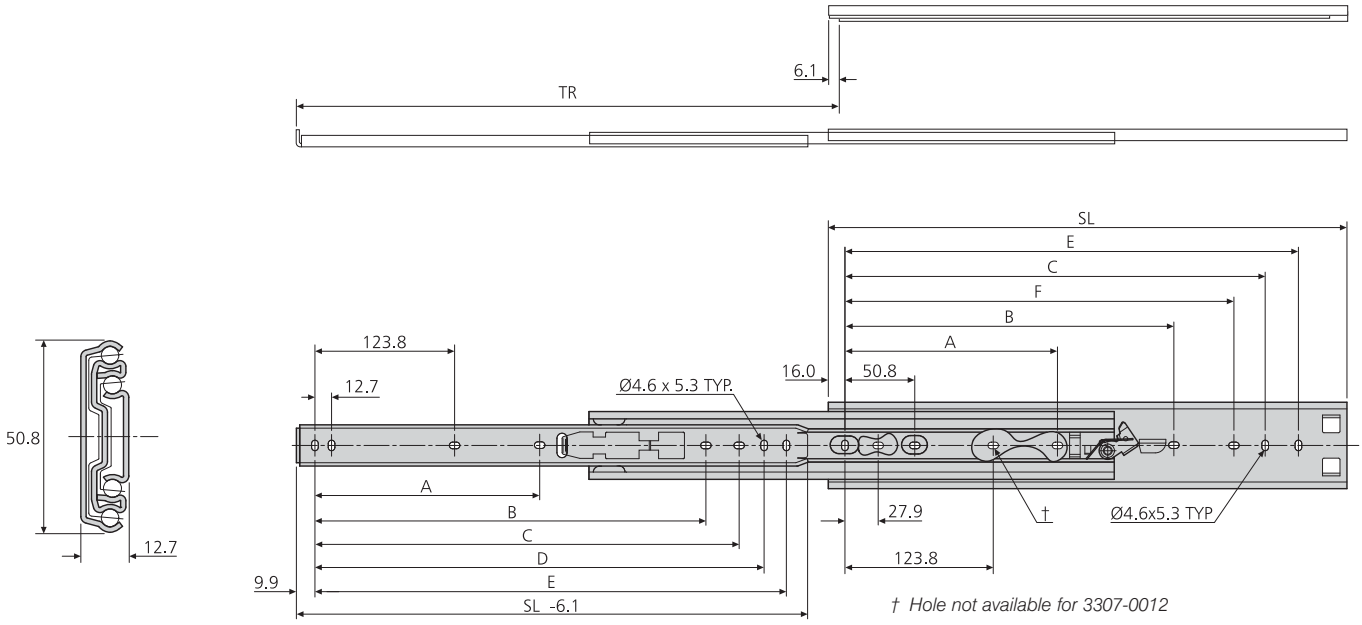

† *Hole not available for 3307-0012*
Agujero no disponible para la guía 3307-0012
Foro non disponible per 3307-0012

3307	mm								kg	
	SL	TR	A	B	C	D	E	F	W	L
DZ3307-0012-2	305	330	-	-	234.9	247.6	260.3	209.5	1.20	68
DZ3307-0014-2	356	381	-	-	285.7	298.4	311.1	260.3	1.41	67
DZ3307-0016-2	406	432	-	-	336.5	349.2	361.9	311.1	1.59	67
DZ3307-0018-2	457	483	177.8	314.4	387.3	400.0	412.7	361.9	1.82	66
DZ3307-0020-2	508	533	203.2	365.2	438.1	450.8	463.5	412.7	2.00	66
DZ3307-0022-2	559	584	228.6	416.0	488.9	501.6	514.3	463.5	2.23	64
DZ3307-0024-2	610	635	254.0	466.8	539.7	552.4	565.1	514.3	2.41	61
DZ3307-0026-2	660	686	279.4	517.6	590.5	603.2	615.9	565.1	2.64	58
DZ3307-0028-2	711	737	304.8	568.4	641.3	654.0	666.7	615.9	2.81	55

Notes:

- *Fixing hardware included or M4 screws are recommended*
- *For enclosure mounting brackets refer to page 103*
- *For cable carriers refer to page 101*

3308

- Load rating up to 68kg
- 100%+ extension
- 12.7mm slide thickness
- Lock-in
- Lock-out
- Front disconnect
- Fixing hardware included
- Optional enclosure mounting brackets

10,000

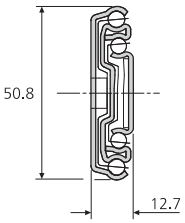

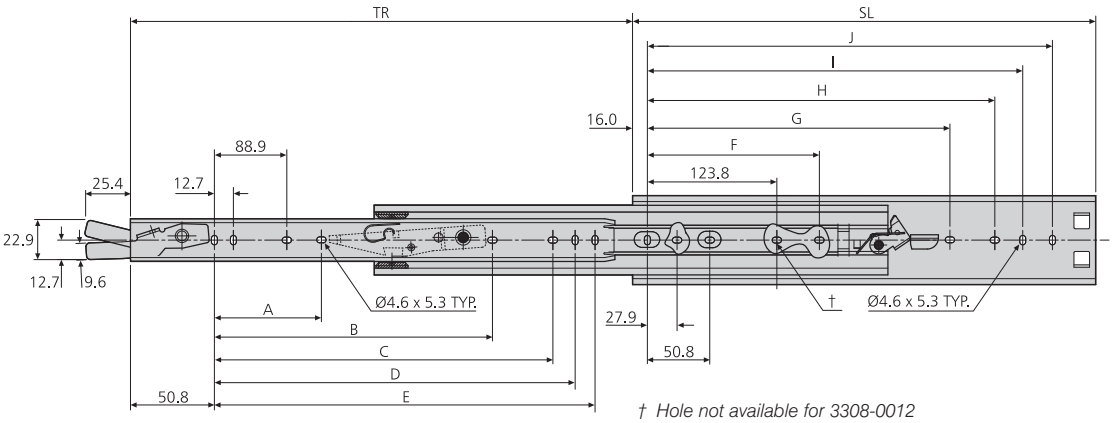

† *Hole not available for 3308-0012*
Agujero no disponible para la guía 3308-0012
Foro non disponible per 3308-0012

3308													kg	
	SL	TR	A	B	C	D	E	F	G	H	I	J	W	L
DZ3308-0012-2	305	330	-	-	220.1	212.8	225.5	-	-	209.5	234.9	260.3	1.25	68
DZ3308-0014-2	356	381	-	-	250.9	263.6	276.3	-	-	260.3	285.7	311.1	1.41	67
DZ3308-0016-2	406	432	-	-	301.7	314.4	327.1	-	-	311.1	336.5	361.9	1.59	67
DZ3308-0018-2	457	483	143.0	279.4	352.5	365.2	377.9	177.8	314.4	361.9	387.3	412.7	1.82	66
DZ3308-0020-2	508	533	168.4	330.2	403.3	416.0	428.7	203.2	365.2	412.7	438.1	463.5	2.00	66
DZ3308-0022-2	559	584	193.8	381.0	454.1	466.8	479.5	228.6	416.0	463.5	488.9	514.3	2.23	64
DZ3308-0024-2	610	635	219.2	431.8	504.9	517.6	530.3	254.0	466.8	514.3	539.7	565.1	2.41	61
DZ3308-0026-2	660	686	244.6	482.6	555.7	568.4	581.1	279.4	517.6	565.1	590.5	615.9	2.78	58
DZ3308-0028-2	711	737	270.0	533.4	606.5	619.2	631.9	304.8	568.4	615.9	641.3	666.7	2.96	55

Notes:

- *Handed slide assembly*
- *Fixing hardware included or M4 Fixing screws are recommended*
- *For enclosure mounting brackets refer to page 103*
- *For cable carriers refer to page 101*

- Load rating up to 70kg
- 100%+ extension
- 19.1mm slide thickness
- Low profile - only 35.3mm high
- Optional enclosure mounting brackets

10,000

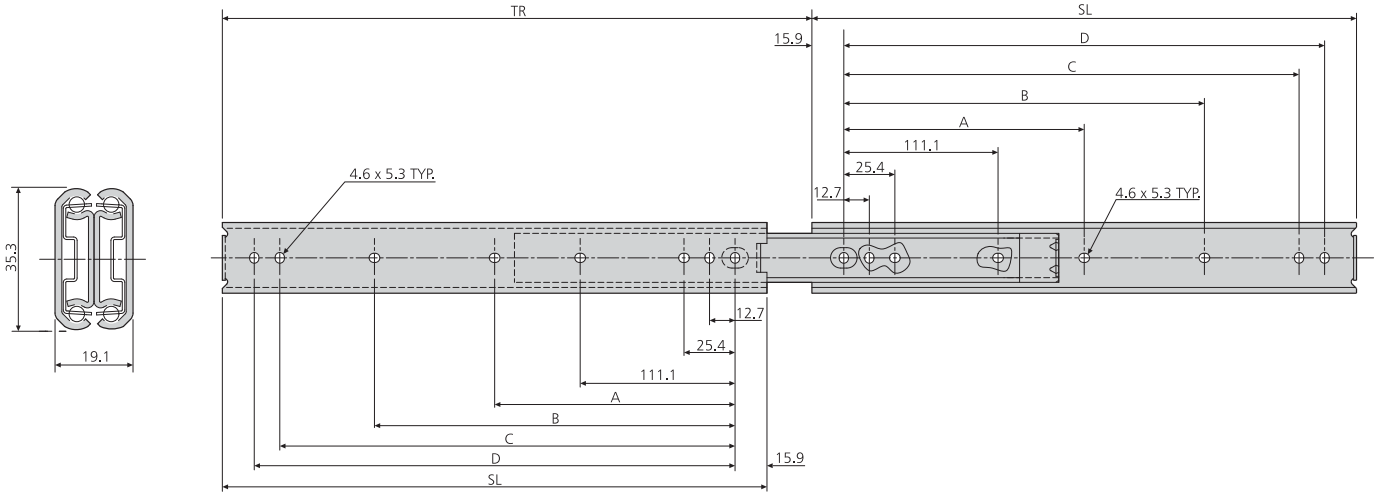

0301	mm						kg	
	SL	TR	A	B	C	D	W	L
DZ0301-0012	305	327	-	149.2	260.3	273.0	1.31	70
DZ0301-0014	356	378	-	200.0	311.1	323.8	1.57	67
DZ0301-0016	406	429	-	250.8	361.9	374.6	1.80	65
DZ0301-0018	457	480	212.7	301.6	412.7	425.4	2.02	63
DZ0301-0020	508	530	238.1	352.4	463.5	476.2	2.27	60
DZ0301-0022	559	581	263.5	403.2	514.3	527.0	2.51	55
DZ0301-0024	610	632	288.9	454.0	565.1	577.8	2.73	50
DZ0301-0026	660	683	314.3	504.8	615.9	628.6	2.93	45
DZ0301-0028	711	734	339.7	555.6	666.7	679.4	3.13	40

Notes:

- *Fixing recommendation:M4 screw*
- *For enclosure mounting brackets refer to page 103*
- *For cable carriers refer to page 101*

0305

- Load rating up to 70kg
- 100%+ extension
- 19.1mm slide thickness
- 10mm side space when recessed
- Lock-out
- Front disconnect
- Optional enclosure mounting brackets, suitable for recess mounting

10,000

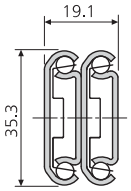

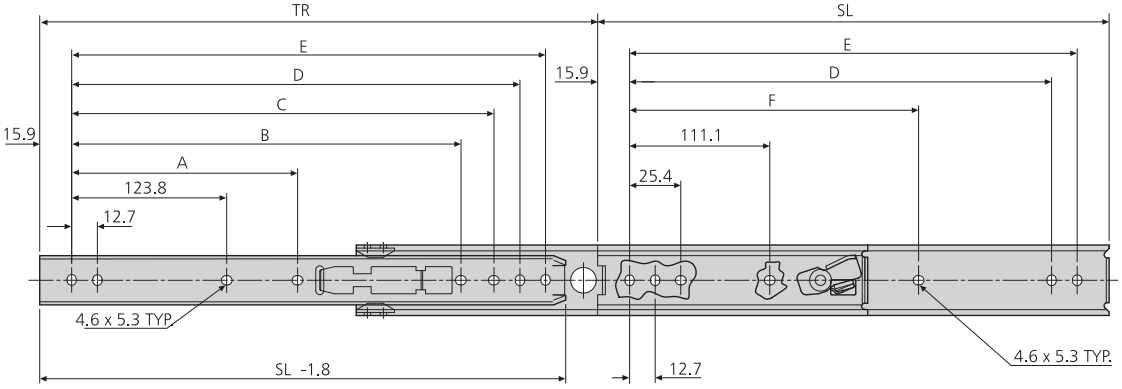

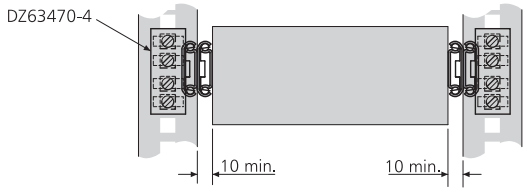

0305	mm								kg	
	SL	TR	A	B	C	D	E	F	W	L
DZ0305-0012	305	327.0	-	-	-	260.3	273.0	-	1.21	64
DZ0305-0014	356	378.0	-	-	298.4	311.1	323.8	-	1.42	60
DZ0305-0016	406	429.0	-	-	349.2	361.9	374.6	250.8	1.63	65
DZ0305-0018	457	479.5	212.7	-	400.0	412.7	425.4	301.6	1.81	70
DZ0305-0020	508	530.5	238.1	365.2	450.8	463.5	476.2	352.4	2.03	65
DZ0305-0022	559	581.0	263.5	415.9	501.6	514.3	527.0	403.2	2.24	60
DZ0305-0024	610	632.0	288.9	466.7	552.4	565.1	577.8	454.0	2.46	55
DZ0305-0026	660	683.0	314.3	517.7	603.2	615.9	628.6	504.8	2.68	39
DZ0305-0028	711	733.5	339.7	568.3	654.0	666.7	679.4	555.6	2.90	36

Notes:

- *Fixing recommendation: M4 screw*
- *For enclosure mounting brackets refer to page 103*
- *For cable carriers refer to page 101*

Heavy duty slides, load rating 100kg+

Guías de carga pesada, carga 100kg+

Guide per impieghi gravosi, portata 100kg+

Model	Load Kg	Travel	Disconnect	Page
Modelo	Carga	Recorrido	Desconexión	Página
Modello	Portata	Corsa	Sgancio	Pagina
DA4120	438	75%		78
3607	120	100%	●	80
9301	227	100%		81
9308	227	100%		82
DA4140	400	100%		88
5417	100	100%+		90
DS5322	120	100%+	●	91
5321SC	120	100%+		92
5321	180	100%+		93
DS5321	180	100%+		94
0522	180	100%+		95

DA4120

- Aluminium
- Load rating up to 438kg
- 75% extension
- Stainless steel ball retainer and ball bearings
- Corrosion resistant
- Slides sold singly

10,000

Aluminium
Aluminio
Alluminio

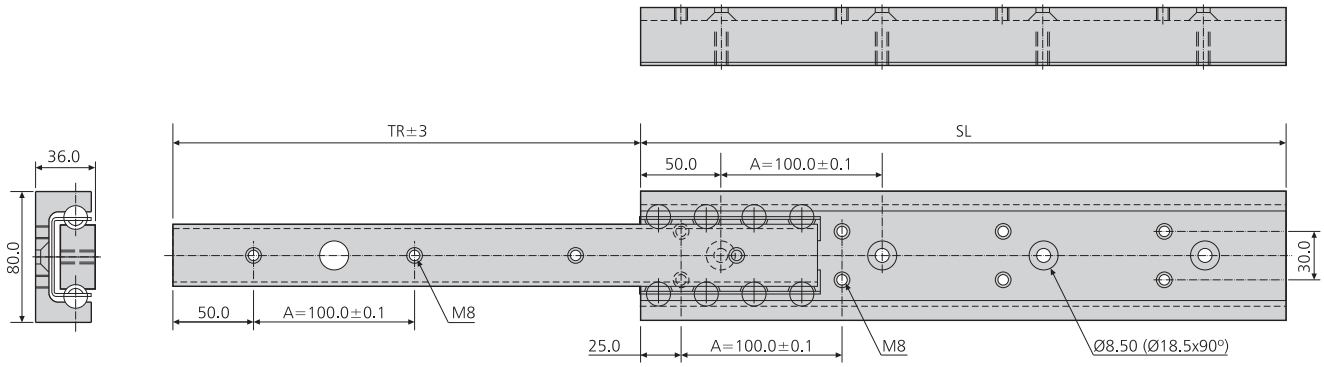

Tolerances are not accumulative
Las tolerancias no son cumulativas
Le tolleranze non sono cumulative

DA4120	mm			kg		
	SL	TR±3	A	W*	†L*	††L*
DA4120-0040	400	290	3 x	4.7	370	185
DA4120-0050	500	360	4 x	5.9	390	195
DA4120-0060	600	430	5 x	7.1	400	200
DA4120-0070	700	501	6 x	8.3	410	205
DA4120-0080	800	572	7 x	9.5	420	210
DA4120-0090	900	642	8 x	10.7	425	212
DA4120-0100	1000	713	9 x	11.9	430	215
DA4120-0110	1100	783	10 x	13.1	434	217
DA4120-0120	1200	853	11 x	14.3	438	219

** Weight and load rating per pair of slides*
** Peso y carga por un par de guías*
** Peso e portata per coppia di guide*

† Vertical mount
Montaje vertical
Montaggio verticale

†† Horizontal mount
Montaje horizontal
Montaggio orizzontale

Notes:

- *The load rating is based on slides mounted 600mm apart. These slides are suitable for wider applications - please consult with Accuride*
- *Fixing recommendation: M8 screw. All fixing positions must be used to achieve maximum load rating*
- *End stops have been tested to 10 cycles with 400kg at 0.8m/s. We recommend that additional external stopping arrangements are used*
- *Material specification: Aluminium slide - AW6082 (3.32315/AlMgSi 1), stainless steel ball bearings and retainer -1.4301*

This slide has been designed for very heavy duty applications. If you would like to confirm that this is the correct slide for your application please consult Accuride's technical department.

3607

- Load rating up to 120kg
- 100% extension
- 19.1mm slide width
- Lock-out
- Front disconnect
- Fixing hardware included
- Optional enclosure mounting brackets

10,000

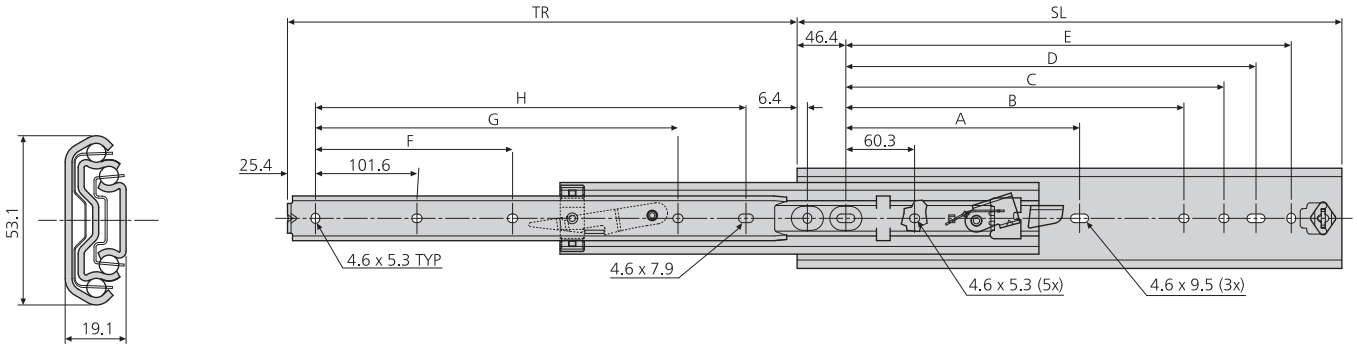

3607	mm										kg	
	SL	TR	A	B	C	D	E	F	G	H	W	L
DZ3607-0012-2	305	305	-	135.4	179.1	204.5	229.9	-	-	228.6	1.71	90
DZ3607-0014-2	356	356	-	186.2	229.9	255.3	280.7	-	-	279.4	2.02	90
DZ3607-0016-2	406	406	-	237.0	280.7	306.1	331.5	-	257.3	330.2	2.27	100
DZ3607-0018-2	457	457	-	287.8	331.5	356.9	382.3	-	308.1	381.0	2.62	110
DZ3607-0020-2	508	508	215.9	338.6	382.3	407.7	433.1	203.2	358.9	431.8	2.93	120
DZ3607-0022-2	559	559	241.3	389.4	433.1	458.5	483.9	228.6	409.7	482.6	3.24	110
DZ3607-0024-2	610	610	266.7	440.2	483.9	509.3	534.7	254.0	460.5	533.4	3.53	100
DZ3607-0026-2	660	660	292.1	491.0	534.7	560.1	585.5	279.4	511.3	584.2	3.83	92
DZ3607-0028-2	711	711	317.5	541.8	585.5	610.9	636.3	304.8	562.1	635.0	4.16	83

Notes:

- *Handed slide assembly - levers move in same direction when pair of slides installed*
- *Fixing hardware included or M4 screws are recommended*
- *For enclosure mounting brackets refer to page 103*
- *For cable carriers refer to page 101*

9301

- Load rating up to 227kg
- 100% extension
- 19.1mm slide thickness
- Slides sold singly
- Available in lengths up to 1.5 metres
- Optional bracket accessory kits for various mounting options

10,000

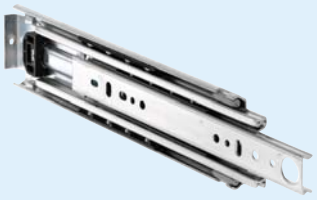

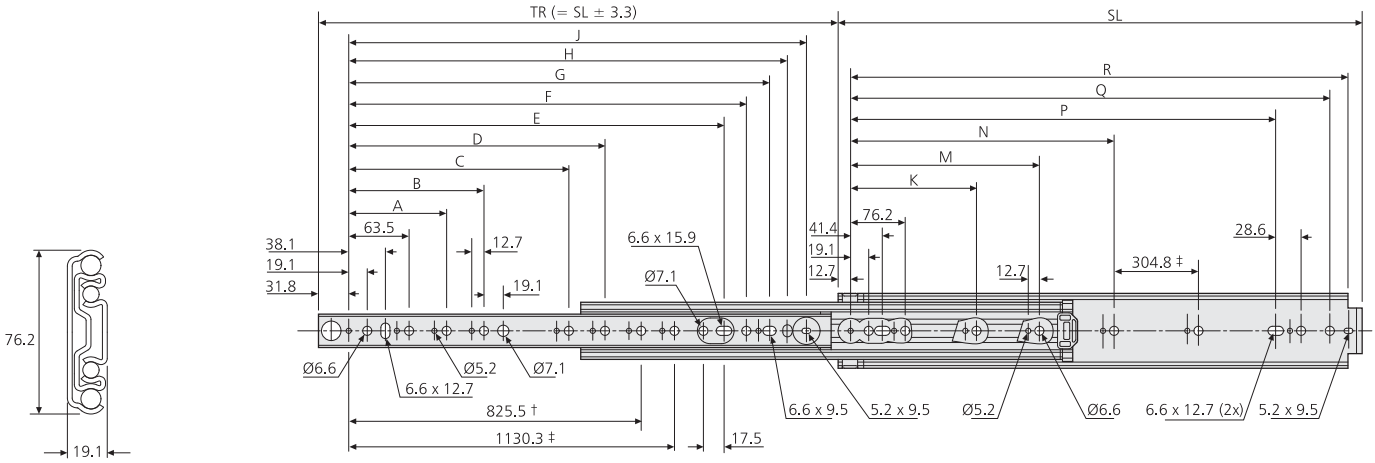

† 9301-0048, 9301-0060

‡ 9301-0060

9301	mm																	kg	
	SL	TR	A	B	C	D	E	F	G	H	J	K	M	N	P	Q	R	W	L*
DZ9301-0010U	254.0	254.0	-	-	-	-	-	103.1	128.5	142.6	166.6	-	-	-	152.4	209.6	228.6	1.20	227
DZ9301-0012U	304.8	304.8	-	-	-	-	-	153.9	179.3	198.4	217.4	-	-	-	203.2	260.4	279.4	3.07	227
DZ9301-0014U	355.6	355.6	-	-	-	-	-	204.7	230.1	249.2	268.2	-	-	-	254.0	311.2	330.2	3.63	227
DZ9301-0016U	406.4	406.4	127.0	-	-	-	-	255.5	280.9	300.0	319.0	-	-	-	304.8	362.0	381.0	4.09	227
DZ9301-0018U	457.2	457.2	127.0	-	-	-	246.1	306.3	331.7	350.8	369.8	-	-	-	355.6	412.8	431.8	4.55	227
DZ9301-0020U	508.0	508.0	127.0	190.5	-	-	296.9	357.1	382.5	401.6	420.6	-	-	-	406.4	463.6	482.6	5.11	227
DZ9301-0022U	558.8	558.8	127.0	190.5	-	-	347.7	407.9	433.3	452.4	471.4	-	-	-	457.2	514.4	533.4	5.68	227
DZ9301-0024U	609.6	609.6	127.0	190.5	-	-	398.5	458.7	484.1	503.2	522.2	-	-	-	508.0	565.2	584.2	6.14	227
DZ9301-0026U	660.4	660.4	127.0	190.5	-	-	449.3	509.5	534.9	554.0	573.0	-	-	-	558.8	616.0	635.0	6.82	227
DZ9301-0028U	711.2	711.2	127.0	190.5	-	-	500.1	560.3	585.7	604.8	623.8	-	-	-	609.6	666.8	685.8	7.05	227
DZ9301-0030U	762.0	762.0	127.0	190.5	368.3	-	550.9	611.1	636.5	655.6	674.6	235.0	-	501.7	660.4	717.6	736.6	7.73	222
DZ9301-0032U	812.8	812.8	127.0	190.5	368.3	-	601.7	661.9	687.3	706.4	725.4	235.0	393.7	552.5	711.2	768.4	787.4	8.18	218
DZ9301-0034U	863.6	863.6	127.0	190.5	368.3	469.9	652.5	712.7	738.1	757.2	776.2	235.0	419.1	603.3	762.0	819.2	838.2	8.64	213
DZ9301-0036U	914.4	914.4	127.0	190.5	368.3	520.7	703.3	763.5	788.9	808.0	827.0	235.0	444.5	654.1	812.8	870.0	889.0	9.32	209
DZ9301-0040U	1016.0	1016.0	127.0	190.5	368.3	520.7	804.9	865.1	890.5	909.6	928.6	235.0	546.1	755.7	914.4	971.6	990.6	10.43	200
DZ9301-0042U	1066.8	1066.8	127.0	190.5	368.3	520.7	855.7	915.9	941.3	960.4	979.4	235.0	546.1	806.5	965.2	1022.4	1041.4	10.89	195
DZ9301-0048U	1219.2	1219.2	127.0	190.5	368.3	520.7	1008.1	1068.3	1093.7	1112.8	1131.8	235.0	596.9	958.9	1117.6	1174.8	1193.8	12.27	182
DZ9301-0060U	1524.0	1524.0	127.0	190.5	368.3	520.7	1312.9	1373.1	1398.5	1417.6	1436.6	235.0	596.9	958.9	1422.4	1479.6	1498.6	15.45	154

Notes:

- *Load ratings vary depending upon application. See page 84*
- *Fixing recommendation: M5/M6 screw. Max. head ht. 4.8mm/Ø 12.7mm necessary to clear traversing members*
- *For bracket accessory kit see page 86*

* *Load rating per pair of slides*

9308

- Load rating up to 227kg
- 100% extension
- 19.1mm slide thickness
- Slides sold singly
- Lock-in
- Lock-out
- Front lever lock release
- Optional bracket accessory kits for various mounting options

10,000

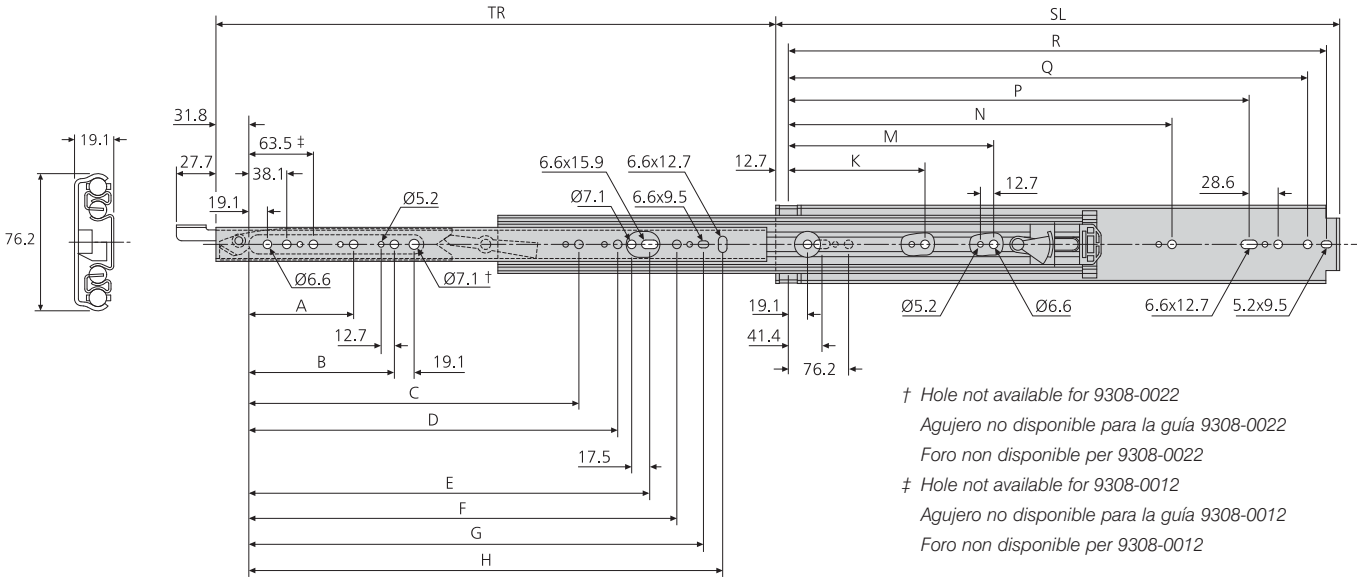

† *Hole not available for 9308-0022*
Agujero no disponible para la guía 9308-0022
Foro non disponible per 9308-0022
‡ *Hole not available for 9308-0012*
Agujero no disponible para la guía 9308-0012
Foro non disponible per 9308-0012

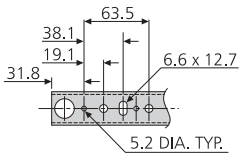

9301

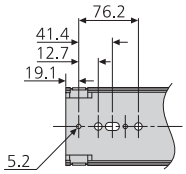

9301

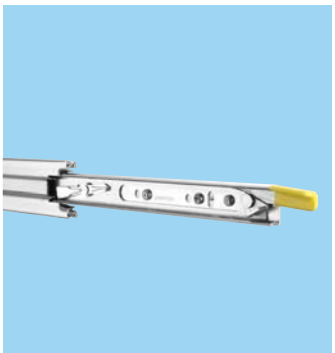

9308	mm																	kg	
	SL	TR	A	B	C	D	E	F	G	H	J	K	M	N	P	Q	R	W	L**
DZ9308-0012*	304.8	304.8	-	-	-	-	-	153.9	179.3	198.4	-	-	-	-	203.2	260.4	279.4	1.46	227
DZ9308-0014*	355.6	355.6	-	-	-	-	-	204.7	230.1	249.2	-	-	-	-	254.0	311.2	330.2	1.71	227
DZ9308-0016*	406.4	406.4	-	-	-	-	-	255.5	280.9	300.0	-	-	-	-	304.8	362.0	381.0	2.23	227
DZ9308-0018*	457.2	457.2	127.0	-	-	-	-	306.3	331.7	350.8	-	-	-	-	355.6	412.8	431.8	2.46	227
DZ9308-0020*	508.0	508.0	127.0	-	-	-	296.9	357.1	382.5	401.6	-	-	-	-	406.4	463.6	482.6	2.58	227
DZ9308-0022*	558.8	558.8	127.0	190.5	-	-	347.7	407.9	433.3	452.4	-	-	-	-	457.2	514.4	533.4	2.70	227
DZ9308-0024*	609.6	609.6	127.0	190.5	-	-	398.5	458.7	484.1	503.2	-	-	-	-	508.0	565.2	584.2	3.28	227
DZ9308-0026*	660.4	660.4	127.0	190.5	-	-	449.3	509.5	534.9	554.0	-	-	-	-	558.8	616.0	635.0	3.55	227
DZ9308-0028*	711.2	711.2	127.0	190.5	-	-	500.1	560.3	585.7	604.8	-	-	-	-	609.6	666.8	685.8	3.74	227
DZ9308-0030*	762.0	762.0	127.0	190.5	-	-	550.9	611.1	636.5	655.6	-	235.0	-	501.7	660.4	717.6	736.6	3.85	222
DZ9308-0032*	812.8	812.8	127.0	190.5	-	-	601.7	661.9	687.3	706.4	-	235.0	-	552.5	711.2	768.4	787.4	3.96	218
DZ9308-0034*	863.6	863.6	127.0	190.5	-	520.7	652.5	712.7	738.1	757.1	-	235.0	-	-	762.0	819.1	838.2	4.36	213
DZ9308-0036*	914.4	914.4	127.0	190.5	368.3	520.7	703.3	763.5	788.9	807.9	-	235.0	-	-	812.8	869.9	889.0	4.60	209
DZ9308-0040*	1016.0	1016.0	127.0	190.5	368.3	-	804.9	865.1	890.5	909.5	-	235.0	-	755.7	914.4	971.5	990.6	5.13	200
DZ9308-0042*	1066.8	1066.8	127.0	190.5	368.3	-	855.7	915.9	941.3	960.4	-	235.0	-	806.5	965.2	1022.4	1041.4	5.40	195
DZ9308-0048*	1219.2	1219.2	127.0	190.5	368.3	520.7	1008.1	1068.3	1093.7	1112.8	-	235.0	-	958.9	1117.6	1174.8	1193.8	6.05	182
DZ9308-0060*	1524.0	1524.0	127.0	190.5	368.3	520.7	1312.9	1373.1	1398.5	1417.8	-	235.0	596.9	958.9	1422.4	1479.5	1498.6	7.56	154

** Specify 'L' for left hand locking slide and 'R' for right hand locking slide, e.g. DZ9308-0012-L*

** Especifique 'L' para las guías de bloqueo a la izquierda y 'R' para las guías de bloqueo a la derecha; por ejemplo, DZ9308-0012-L*

** Specificare 'L' per guida con blocco a sinistra ed 'R' per guida con blocco a destra, es. DZ9308-0012-L*

Notes:

- *Load ratings vary depending upon application. See page 84*
- *Fixing recommendation: M5 and M6 screws*
- *Vertical mounting only*
- *Use slide 9301 as a non-locking companion slide.*
- *For applications requiring a lock on both sides, order an equal amount of 'L' and 'R' slides*
- *For bracket accessory kit see page 86*

*** Load rating per pair of slides*

9301/9308 load ratings

9301/9308 Capacidades de carga
9301/9308 Portate

The Accuride load ratings shown below represent a wide range of typical applications and take into consideration factors which can adversely affect the performance of the slide.

In general, slides installed in drawers that are wider than they are deep are subjected to lateral (side) stresses that reduce their load carrying capacity. Likewise, slides in applications that are cycled frequently also carry a lower load rating.

Las capacidades de carga de Accuride mostradas a continuación representan una amplia gama de aplicaciones típicas y toman en consideración factores que podrían afectar negativamente al rendimiento de la guía.

Por lo general, las guías instaladas en cajones que son más anchos que profundos están sometidas a tensiones laterales que reducen su capacidad de carga. De la misma manera, las guías en aplicaciones que se someten a ciclos frecuentes también sufren una reducción en la capacidad de carga.

Le portate Accuride sotto riportate rappresentano una vasta gamma di applicazioni tipiche e prendono in considerazione fattori che possono compromettere la performance della guida.

In generale, le guide installate in cassetti più larghi che profondi sono soggette a sollecitazioni laterali che ne riducono la portata. Analogamente, anche le guide che sono sottoposte a ciclizzazione frequente hanno portata inferiore.

Moderate use	up to 227kg Load rating is based on a 457.2mm slide in a 450mm wide drawer, cycled 10,000 times. A computer server storage unit may be cycled once per month for servicing. Electronic instrumentation may be cycled a few times each week.
Typical applications	*Computer server storage access* *Electronic instrumentation chassis*
Uso moderado	hasta 227kg La capacidad de carga está basada en una guía de 450mm en un cajón de 457.2mm de anchura, con 10,000 ciclos. Una unidad de almacenamiento de servidor informático puede completar varios ciclos una vez al mes para mantenimiento. La provisión de instrumentos electrónicos puede completar varios ciclos a la semana.
Aplicaciones típicas	*Acceso de almacenamiento de servidor informático* *Chasis de provisión de instrumentos electrónicos*
Uso moderato	fino a 227kg La portata è basata su una guida da 457,2mm in un cassetto di 450mm di larghezza, sottoposta a 10,000 cicli. Un'unità contenente un server può avere un ciclo al mese, per manutenzione. L'attrezzatura elettronica può avere più cicli alla settimana.
Applicazioni tipiche	*Accesso al server computer* *Telaio strumentazione elettronica*

Frequent use	up to 182kg Load rating is based on a 457.2mm slide in a 1000mm wide drawer, cycled 75,000 Times. A storage drawer opened and closed an average of three times per hour during each eight-hour work day would undergo a total of 60,000 cycles in 10 years.
Typical applications	*Heavy duty storage drawers* *Large pantry pull-outs* *Modular storage cabinets*
Uso frecuente	hasta 182kg La capacidad de carga está basada en una guía de 457,2mm en un cajón de 1000mm de anchura, con ciclos de 75,000 veces. Un cajón de almacenamiento abierto y cerrado una media de tres veces por hora durante un día laboral de 8 horas estaría sometido a un total de 60,000 ciclos en 10 años.
Aplicaciones típicas	*Cajones de almacenamiento de servicio pesado* *Despenseros extraíbles grandes* *Armarios modulares de almacenamiento*

Uso frequente	fino a 182kg La portata è basata su una guida da 457,2mm in un cassetto di 1000mm di larghezza, sottoposta a 75,000 cicli. Un cassetto aperto e chiuso in media tre volte all'ora per otto ore lavorative, sarebbe sottoposto a 60,000 cicli in 10 anni.
Applicazioni tipiche	*Cassetti per impieghi gravosi* *Estraibili per dispensa* *Armadi modulari*

Mobile (Vehicular)	up to 136kg Load rating is based on a 457.2mm slide in a 800mm wide drawer, cycled 10,000 times. Use for any application associated with transportation, or any application exposed to vibration and rough usage.
Typical applications	*Recreational vehicle drawers* *Vehicle battery trays* *Service truck tool drawers*
Móvil (para vehículos)	hasta 136kg La capacidad de carga está basada en una guía de 457,2mm en un cajón de 800mm de anchura, con ciclos de 10,000 veces. Se podrá utilizar para cualquier aplicación asociada con transportes, o cualquier aplicación expuesta a vibraciones y uso severo.
Aplicaciones típicas	*Cajones de almacenamiento para vehículos* *Bandejas para baterías de vehículos* *Cajones de herramientas para vehículos de manutención en carretera*
Mobile (veicolare)	fino a 136kg La portata è basata su una guida da 457,2mm in un cassetto di 800mm di larghezza, sottoposta a 10,000 cicli. Usata per qualsiasi applicazione associata ai trasporti o con qualsiasi applicazione soggetta a vibrazioni e ad un uso arduo.
Applicazioni tipiche	*Cassetti per veicoli ricreativi* *Vassoi per batterie* *Cassetti per attrezzi di manutenzione autocarri*

Flat mount (not 9308)	up to 45kg Load rating is based on a 457.2mm slide in a 800mm wide drawer, cycled 10,000 times. Deflection of flat mounted slides will vary depending upon the application. We recommend prototyping to determine that the deflection is within an acceptable range. Use anywhere side space is limited.
Typical applications	*Flight status monitor cabinets*
Montaje plano (no 9308)	hasta 45kg La capacidad de carga está basada en una guía de 457,2mm en un cajón de 800mm de anchura, con ciclos de 10,000 veces. Desviación de las guías montadas horizontalmente cambiarán dependiente de la aplicación. Recomendamos que hagan prototipos para se determinar que la desviación sea dentro de un rango aceptable. Para utilizar en lugares en los que el espacio lateral sea muy limitado.
Aplicaciones típicas	*Armarios de monitor de estado de vuelo*
Montaggio piatto (escluso 9308)	fino a 45kg La portata è basata su una guida da 457,2mm in un cassetto da 800mm di larghezza, sottoposta a 10,000 cicli. L'indice di flessione/curvatura nelle guide montate in piano dipende dal tipo di applicazione a cui sono soggette.Raccomandiamo di fare delle prove su campioni per determinare che la flessione risulti essere entro campi accettabili. Usata dovunque lo spazio laterale sia limitato.
Applicazioni tipiche	*Armadi per il monitoraggio del traffico aereo*

Caution:	This slide must never be used as a pull-out step, platform or any other application supporting human weight.
Precaución:	Esta guía nunca deberá utilizarse como peldaño desplegable, plataforma o cualquier otra aplicación para soportar el peso humano.
Attenzione:	Non si deve mai usare questa guida come gradino estraibile, piattaforma o qualsiasi altra applicazione che debba sopportare il peso di una persona.

634xx

- Platform bracket kit for 9301/9308
- 4 bottom and 2 side mount options
- Unhanded brackets
- Fixing hardware included

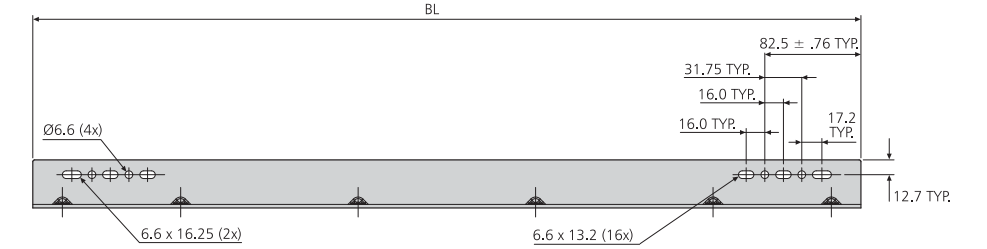

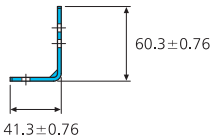

Bracket lengths (BL):

305mm, 406mm, 559mm, 711mm

Kit includes:

2 x brackets

4 x 6.4 x 15.9 hex head screws

4 x 6.4 hex head nuts and lock washers

Four bracket lengths can be used, either individually or in combination, to cover all slide lengths. See chart to determine number of bracket kits required.

S

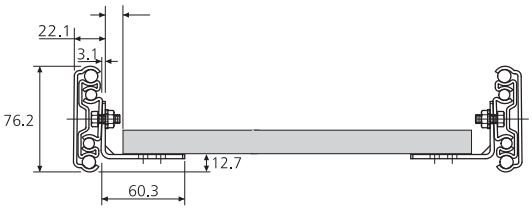

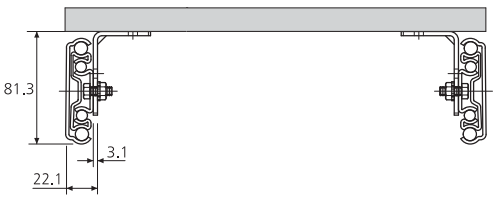

B

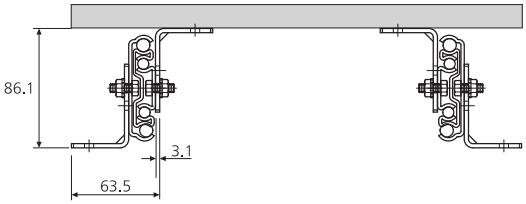

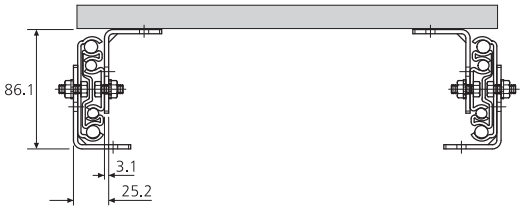

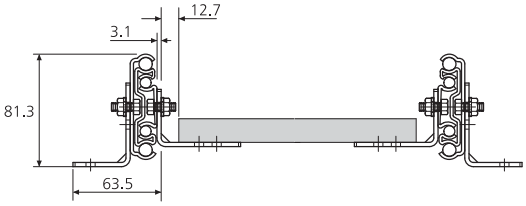

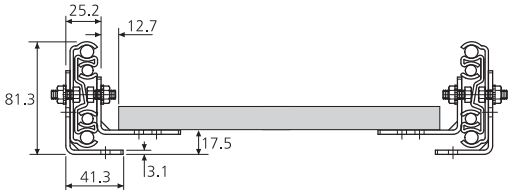

9301/9308	DZ63412-305mm		DZ63416-406mm		DZ63422-559mm		DZ63428-711mm	
	S	B	S	B	S	B	S	B
930x-0012	1	2	-	-	-	-	-	-
930x-0014	1	2	-	-	-	-	-	-
930x-0016	-	-	1	2	-	-	-	-
930x-0018	-	-	1	2	-	-	-	-
930x-0020	-	-	1	2	-	-	-	-
930x-0022	-	-	-	-	1	2	-	-
930x-0024	-	-	-	-	1	2	-	-
930x-0026	-	-	-	-	1	2	-	-
930x-0028	-	-	-	-	-	-	1	2
930x-0030	-	-	-	-	-	-	1	2
930x-0032	-	-	-	-	-	-	1	2
930x-0034	2	4	-	-	-	-	-	-
930x-0036	2	4	-	-	-	-	-	-
930x-0040	1	2	-	-	1	2	-	-
930x-0042	1	2	-	-	1	2	-	-
930x-0048	1	2	-	-	-	-	1	2
930x-0060	-	-	-	-	1	2	1	2

Slide lengths:

304.8mm - 812.8mm
1 kit to Side-Mount, 2 kits to Bottom-Mount

863.6mm - 914.4mm
2 kits (same part number) to Side-Mount, 4 kits (same part number) for Bottom-Mount

1016mm - 1524mm
2 kits (different part numbers) to Side-Mount, 4 kits (different part numbers) to Bottom-Mount

Notes:

- *Customer supplies hardware to mount brackets to base and/or platform/drawer*
- *Cold rolled steel*
- *Dimensions for reference only*

S= *Side-Mount*

B= *Bottom-Mount*

DA4140

- Aluminium
- Load rating up to 400kg
- 100% extension
- Slide thickness 38mm
- Stainless steel ball retainer and ball bearings
- Corrosion resistant
- Slides sold singly

10,000

Tolerances are not accumulative
Las tolerancias no son cumulativas
Le tolleranze non sono cumulative

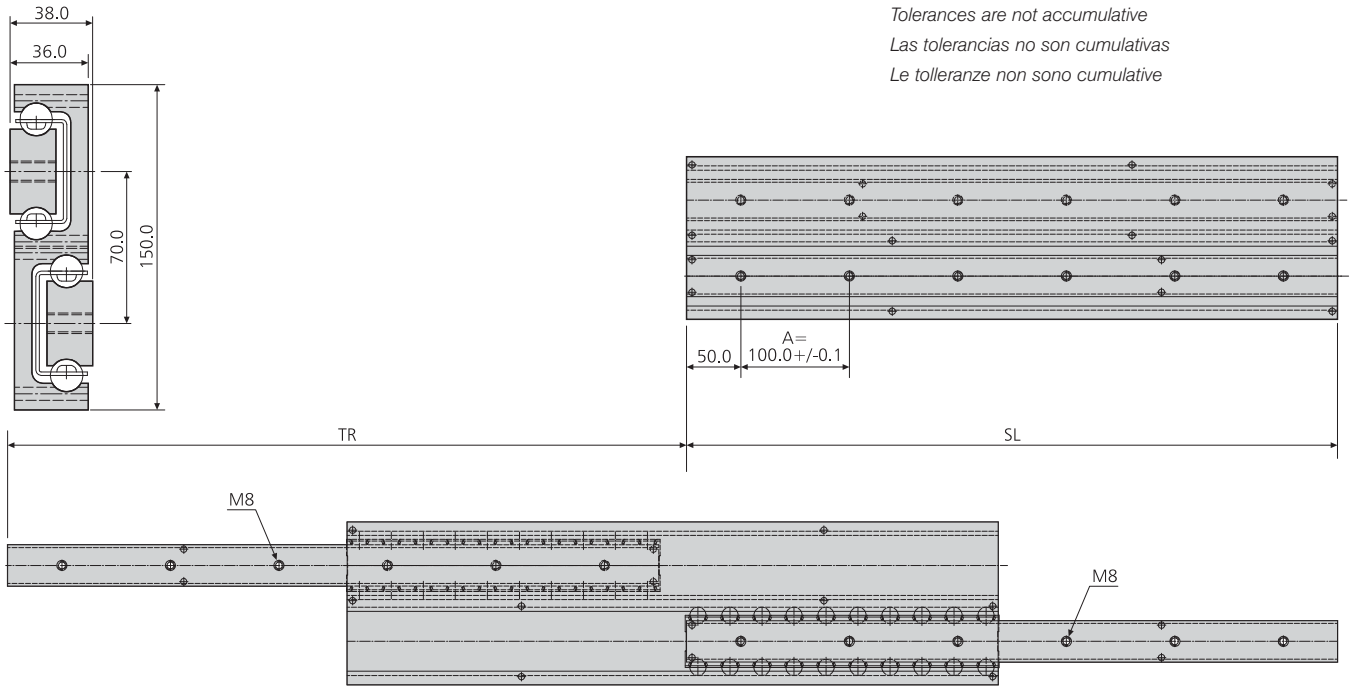

DA4140	mm			kg	
	SL	TR±3	A	W*	L*
DA4140-0040	400	402	3x	9.6	400
DA4140-0050	500	543	4x	11.8	400
DA4140-0060	600	625	5x	14.4	400
DA4140-0070	700	707	6x	16.8	400
DA4140-0080	800	848	7x	19.0	400
DA4140-0090	900	930	8x	21.4	400
DA4140-0100	1000	1012	9x	24.0	400
DA4140-0110	1100	1153	10x	26.0	400
DA4140-0120	1200	1235	11x	28.6	400
DA4140-0150	1500	1540	14x	35.8	400

** Weight and load rating per pair of slides*
** Peso y carga por un par de guías*
** Peso e portata per coppia di guide*

Notes:

- *The load rating is based on slides mounted 600mm apart. These slides are suitable for wider applications - please consult with Accuride*
- *Fixing recommendation: M8 screw. All fixing positions must be used to achieve maximum load rating*
- *Vertical mounting only*
- *End stops have been tested to 10 cycles with 400kg at 0.8m/s. We recommend that additional external stopping arrangements are used*
- *Material specification: Aluminium slide - AW6082 (3.32315/AlMgSi 1), stainless steel ball bearings and retainer -1.4301*

This slide has been designed for very heavy duty applications. If you would like to confirm that this is the correct slide for your application please consult Accuride's technical department.

5417

- Load rating up to 100kg
- 100%+ extension
- 17.5mm slide thickness
- Hold-in

10,000

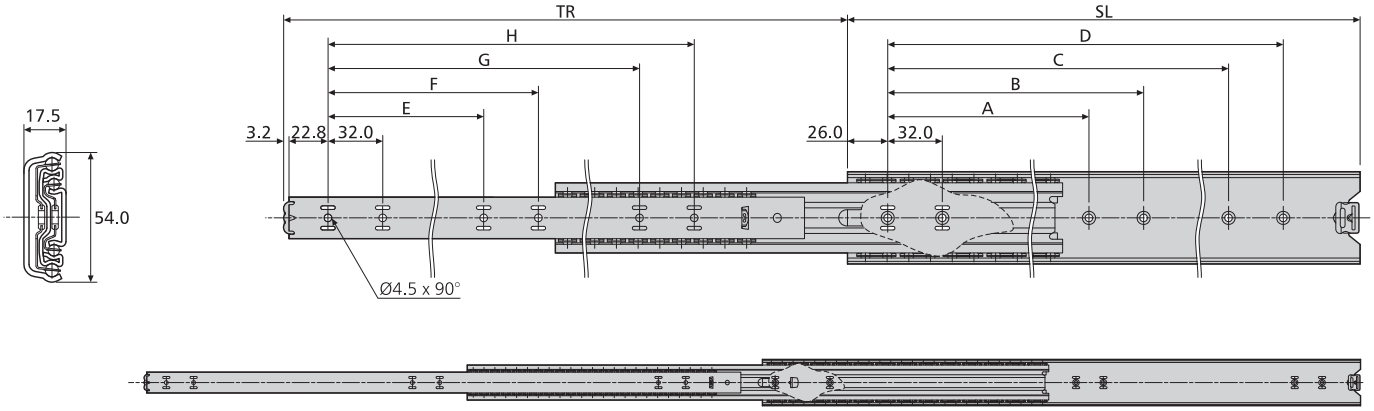

5417	mm										kg	
	SL	TR	A	B	C	D	E	F	G	H	W	L
DZ5417-0030	300	340	-	-	224	256	-	-	-	256	1.6	90
DZ5417-0035	350	389	-	-	224	256	-	-	-	256	1.9	90
DZ5417-0040	400	438	160	192	320	352	128	160	-	352	2.2	92
DZ5417-0045	450	487	160	192	320	352	128	160	320	352	2.5	95
DZ5417-0050	500	537	192	224	416	448	160	192	-	416	2.8	100
DZ5417-0055	550	586	224	-	448	480	160	192	-	448	3.1	100
DZ5417-0060	600	635	256	288	480	512	192	224	480	512	3.4	94
DZ5417-0065	650	684	288	320	544	576	192	256	-	544	3.7	92
DZ5417-0070	700	733	288	416	576	608	256	288	576	608	4.0	90

Notes:

- *Fixing recommendation: M4 countersunk screw*

DS5322

- High grade stainless steel
- Load rating up to 120kg
- 100%+ extension
- 20.7mm slide thickness
- Ideal for environments where mild steel might be subject to corrosion
- Hold-in
- Includes easy mount brackets with locator pins

80,000

Stainless steel
Acero inoxidable
Acciaio inossidabile

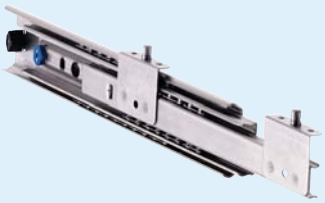

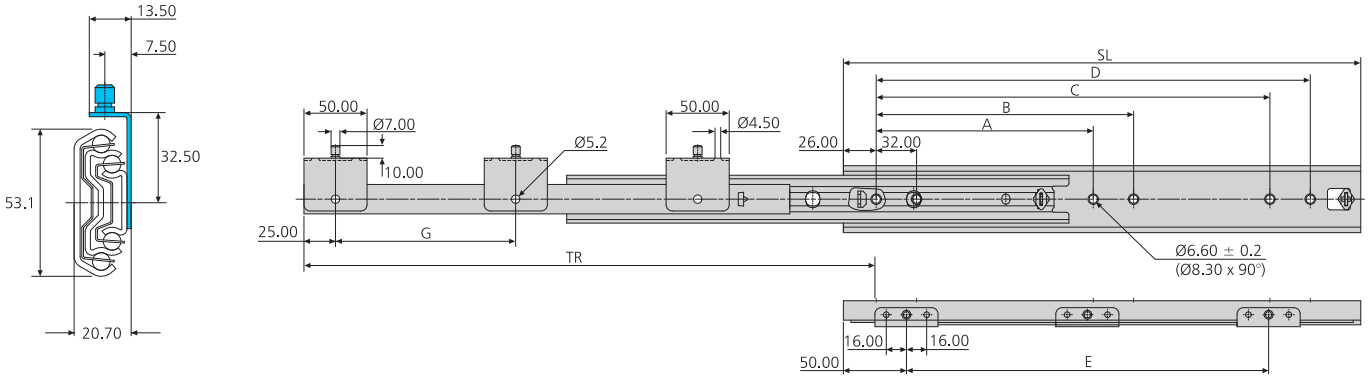

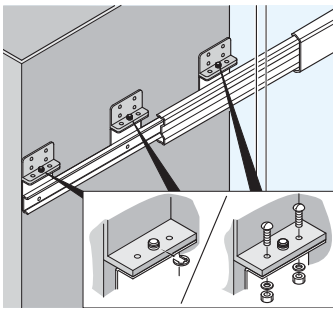

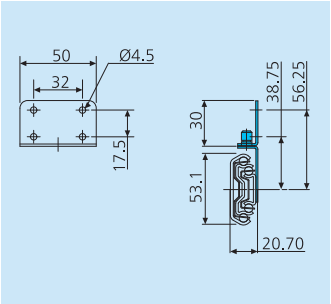

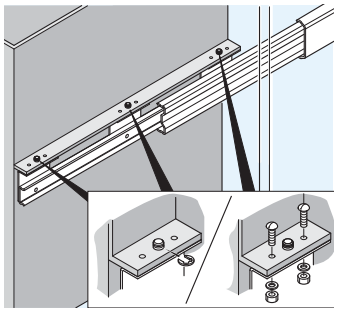

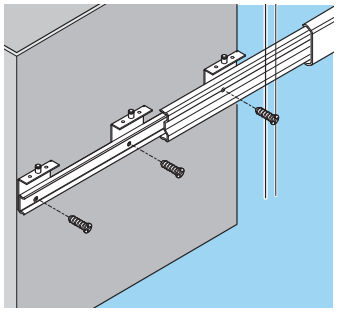

DS5322	mm								kg	
	SL	TR	A	B	C	D	E	G	W	L
DS5322-0030-2	300	342	-	-	192	224	177	-	1.90	80
DS5322-0035-2	350	392	-	-	256	288	227	-	2.15	90
DS5322-0040-2	400	442	160	192	288	320	277	-	2.40	100
DS5322-0045-2	450	492	192	224	352	384	327	-	2.66	110
DS5322-0050-2	500	542	192	224	384	416	377	-	2.98	120
DS5322-0055-2	550	592	224	256	448	480	427	-	3.28	110
DS5322-0060-2	600	642	256	288	480	512	477	238.5	3.58	100
DS5322-0070-2	700	742	320	352	608	640	577	288.5	4.20	70
DS5322-0080-2	790	822	352	384	672	704	677	338.5	4.80	50

Notes:

- *Fixing recommendation: M5 countersunk/ 6mm countersunk Euro screw*

5321SC

- Self close
- Load rating up to 120kg
- 100%+ extension
- 19.1mm slide thickness
- Hold-in
- Optional enclosure mounting brackets

10,000

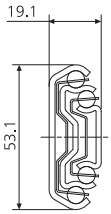

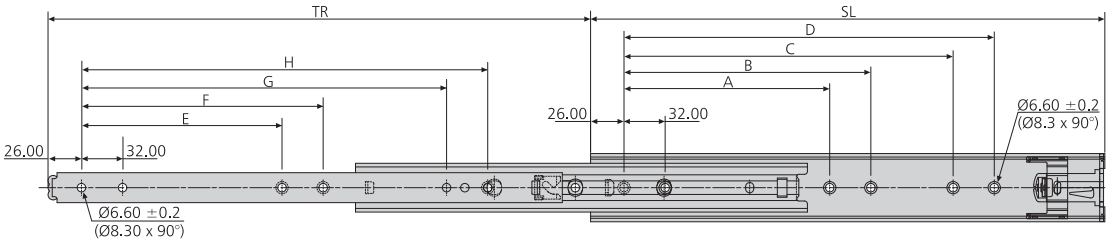

5321SC	mm										kg	
	SL	TR	A	B	C	D	E	F	G	H	W	L
DZ5321-0030SC	300	319	-	-	160	192	-	-	192	224	1.90	85
DZ5321-0035SC	350	369	-	-	224	256	-	-	224	256	2.15	90
DZ5321-0040SC	400	419	160	192	256	288	160	192	288	320	2.40	100
DZ5321-0045SC	450	469	192	224	320	352	192	224	352	384	2.66	110
DZ5321-0050SC	500	519	224	256	352	384	224	256	384	416	2.98	120
DZ5321-0055SC	550	569	224	256	416	448	224	256	448	480	3.28	110
DZ5321-0060SC	600	619	256	288	480	512	256	288	480	512	3.58	100
DZ5321-0070SC	700	719	320	352	544	576	320	352	576	608	4.20	70
DZ5321-0080SC	790	823	352	384	640	672	352	384	672	704	4.80	50

Notes:

- *Fixing recommendation: M5 countersunk/ 6mm countersunk Euro screw*
- *For enclosure mounting brackets refer to page 103*
- *For cable carriers refer to page 101*

- Load rating up to 180kg
- 100%+ extension
- 19.1mm slide thickness
- Hold-in
- Optional enclosure mounting brackets

10,000

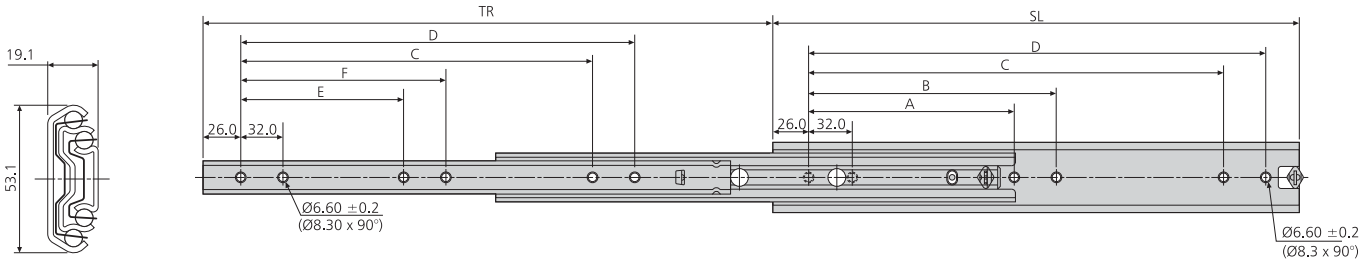

5321	mm								kg	
	SL	TR	A	B	C	D	E	F	W	L
DZ5321-0030	300	323.5	-	-	192	224	-	-	1.80	140
DZ5321-0035	350	373.5	-	-	224	256	-	-	2.07	150
DZ5321-0040	400	423.5	160	192	288	320	128	160	2.37	160
DZ5321-0045	450	473.5	160	192	320	352	128	160	2.70	170
DZ5321-0050	500	523.5	192	224	384	416	160	192	3.00	180
DZ5321-0055	550	573.5	192	224	416	448	160	192	3.31	170
DZ5321-0060	600	623.5	256	288	480	512	192	256	3.62	160
DZ5321-0070	700	723.5	288	320	576	608	256	288	4.26	130
DZ5321-0080	790	803.5	352	384	672	704	320	352	4.80	100
DZ5321-0090	900	923.5	448	480	768	800	384	416	5.57	90
DZ5321-0100	1000	1023.5	480	512	864	896	448	480	6.19	80
DZ5321-0110	1100	1123.5	544	576	992	1024	480	512	6.81	70

Notes:

- *Fixing recommendation: M5 countersunk/ 6mm countersunk Euro screw*
- *For enclosure mounting brackets refer to page 103*
- *For cable carriers refer to page 101*

DS5321

- High grade stainless steel
- Load rating up to 180kg
- 100%+ extension
- 19.1mm slide thickness
- Ideal for environments where mild steel might be subject to corrosion
- Hold-in

10,000

Stainless steel
Acero inoxidable
Acciaio inossidabile

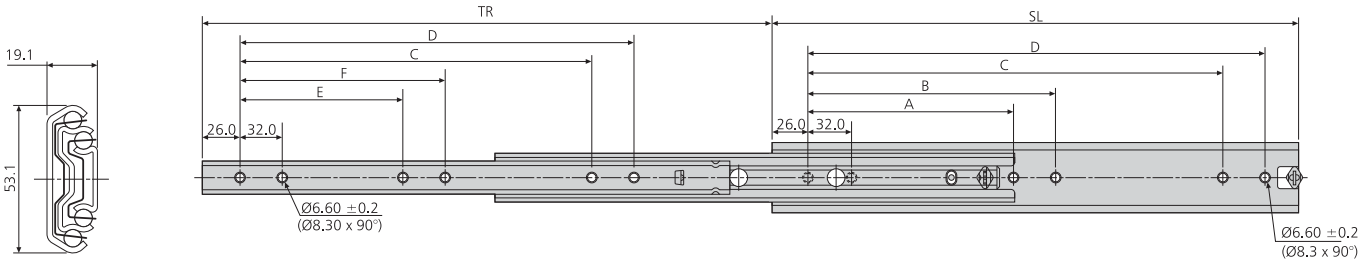

DS5321	mm								kg	
	SL	TR	A	B	C	D	E	F	W	L
DS5321-0030	300	323.5	-	-	192	224	-	-	1.70	140
DS5321-0035	350	373.5	-	-	224	256	-	-	1.96	150
DS5321-0040	400	423.5	160	192	288	320	128	160	2.24	160
DS5321-0045	450	473.5	160	192	320	352	128	160	2.56	170
DS5321-0050	500	523.5	192	224	384	416	160	192	2.84	180
DS5321-0055	550	573.5	192	224	416	448	160	192	3.13	170
DS5321-0060	600	623.5	256	288	480	512	192	256	3.43	160
DS5321-0070	700	723.5	288	320	576	608	256	288	4.03	130
DS5321-0080	790	803.5	352	384	672	704	320	352	4.55	100

Notes:

- *Fixing recommendation: M5 countersunk/ 6mm countersunk Euro screw*

- Load rating up to 180kg
- 100%+ extension
- Heavy duty construction
- Shock blocks for protection against shock and vibration
- Protective shroud prevents excessive contamination of the ball tracks
- Mounting plates on inner and outer members

10,000

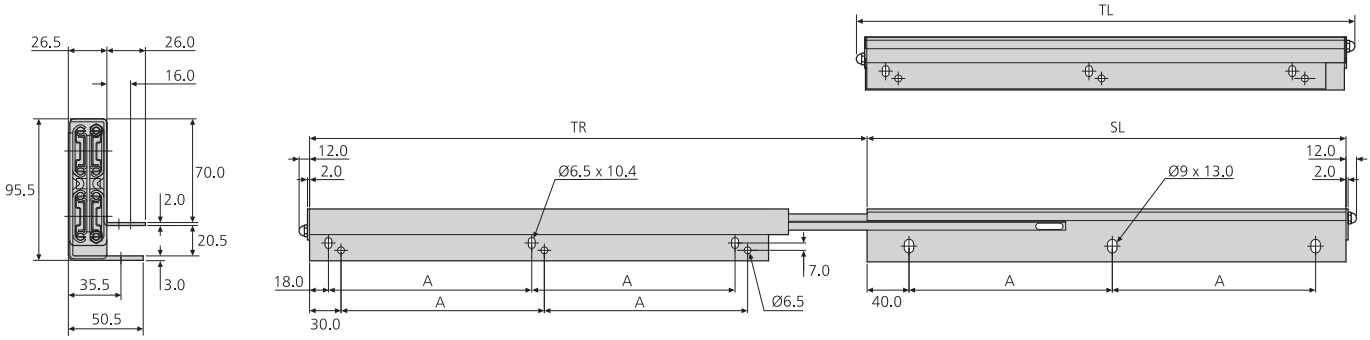

0522	mm				kg	
	SL	TL	TR	A	W	L
DZ0522-1159	457	481	534.0	194.0	9.57	180
DZ0522-1161	600	624	625.0	265.0	12.70	180
DZ0522-1162	900	924	907.0	276.5	19.25	150

Notes:

- *Load ratings vary depending upon application. See page 96*
- *On DZ0522-1162 there are additional fixing positions at Pitch A*
- *Fixing recommendation: M6 screws on the inner extending member, M8 screws on the outer fixed member*
- *Slide assembly is handed*
- *Total length (TL) = slide length +24mm*
- *All fixing positions must be used to achieve maximum load rating*
- *The cabinet and drawer must be designed to minimise any torsion or deflection of the slide*

0522 Load ratings

0522 Capacidades de carga
0522 Portate

The Accuride load ratings shown below are representative of a wide range of typical applications and take into consideration factors which can adversely affect the performance of the slide.

Please consult Accuride regarding specific application conditions where the load rating is critical.

Las capacidades de carga de Accuride mostradas a continuación representan una amplia gama de aplicaciones típicas y toman en consideración factores que podrían afectar negativamente al rendimiento de la guía.

Por favor consulte Accuride por lo que se refiere a condiciones de aplicaciones específicas donde las capacidades de carga son críticas.

Le portate Accuride sotto riportate rappresentano una vasta gamma di applicazioni tipiche e prendono in considerazione fattori che possono compromettere la performance della guida.

Per tutte quelle condizioni di lavoro dove la portata rappresenta un punto critico siete pregati di rivolgervi ad un rappresentante Accuride.

Moderate use	up to 180kg Load rating is based on a 600mm slide in a 500mm wide drawer, cycled 10,000 times.
Uso moderado	hasta 180kg La capacidad de carga está basada en una guía de 600mm en un cajón de 500mm de anchura, con ciclos de 10,000 veces.
Uso moderato	fino a 180kg La portata è basata su una guida da 600mm in un cassetto di 500mm di larghezza, sottoposta a 10,000 cicli.
Frequent use	up to 140kg Load rating is based on a 600mm slide in a 500mm wide drawer, cycled 40,000 times.
Uso frecuente	hasta 140kg La capacidad de carga está basada en una guía de 600mm en un cajón de 500mm de anchura, con ciclos de 40,000 veces.
Uso frequente	fino a 140kg La portata è basata su una guida da 600mm in un cassetto di 500mm di larghezza, sottoposta a 40,000 cicli.
Caution:	This slide must never be used as a pull-out step, platform or any other application supporting human weight.
Precaución:	Esta guía nunca deberá utilizarse como peldaño desplegable, plataforma o cualquier otra aplicación para soportar el peso humano.
Attenzione:	Non si deve mai usare questa guida come gradino estraibile, piattaforma o qualsiasi altra applicazione che debba sopportare il peso di una persona.

Enclosure mounting accessories

Accesorios de montaje para armarios

Accessori di montaggio per armada rack

CC11-AD cable carrier	Page 101
CC5AD cable carrier	Page 102
Bracket kits	Page 103

CC11-AD portador de cables	Página 101
CC5AD portador de cables	Página 102
Escuadras	Página 103

CC11-AD portacavi	Pagina 101
CC5AD portacavi	Pagina 102
Staffe	Pagina 103

Enclosure mounting accessories

Accesorios para montaje en armarios
Accessori di montaggio per armadi rack

Mounting brackets

Optional brackets are available to simplify the mounting of slides in an electronics rack/enclosure. Refer to the Bracket Selection Table on page 103.

- All brackets are supplied in kits complete with fixing hardware
- Short fixed brackets are usually used at the front of the chassis and short/long adjustable brackets at the rear

Hard mounting, general enclosures (without Accuride brackets)

1. Ensure cabinet sides are parallel and that chassis sides are parallel and square to the cabinet
2. Mount the slides to the cabinet and then the chassis to the slides
3. Check for even and smooth movement of the chassis
4. If binding occurs, or slide movement is not satisfactory:

- Loosen screws on main cabinet member and then on chassis member
- Cycle the unit a few times
- If movement has improved tighten off screws and cycle again
- If movement is still not satisfactory there may be a problem with the cabinet or chassis

Electronic cabinet mounting with Accuride brackets on uprights

1. Ensure cabinet sides are parallel and that chassis sides are parallel and square to the cabinet
2. Using mounting kits and brackets, mount brackets to slide cabinet members. Screw the back brackets on loosely.
3. Install slides into rack and secure with bar nuts.
4. Mount slide drawer members to the chassis.
5. Check for even and smooth movement of the chassis
6. If binding occurs, or slide movement is not satisfactory:

- Loosen screws on rear mount brackets (fig c1) and adjust brackets
- Loosen screws on the chassis member (fig c2)
- Cycle the unit a few times
- If movement has improved tighten off screws and cycle again
- If movement is still not satisfactory there may be a problem with the cabinet or chassis

If in doubt we recommend that you consult with your local Accuride representative to determine product suitability.

Cable carriers

Portadores de cables
Portacavi

- Broad and narrow cable management arms
- Concertina open/close
- Suitable for 2U high units and above
- Easy disconnect from chassis

CC11-AD

- Cable carrying widths: 72mm
- Weight per unit: 0.9kg
- Order code: DZCC11-AD

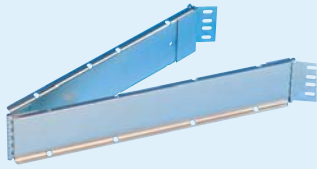

CC5AD

- Cable carrying widths: 31mm
- Weight per unit: 0.475kg
- Order code: DZCC5AD

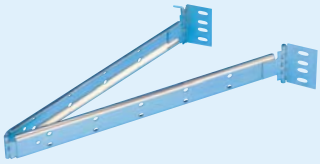

CC11-AD

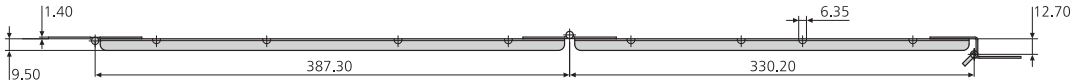

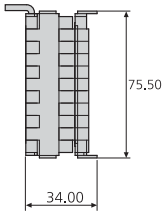

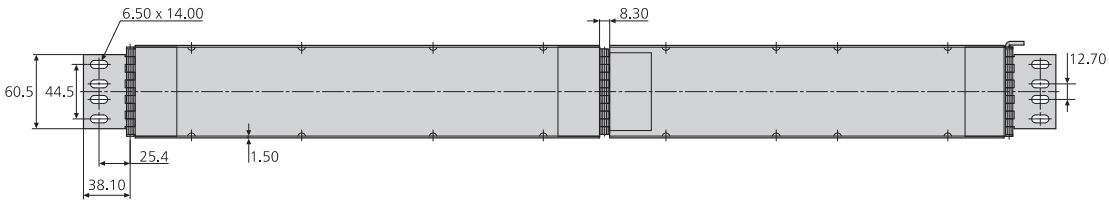

CC5AD

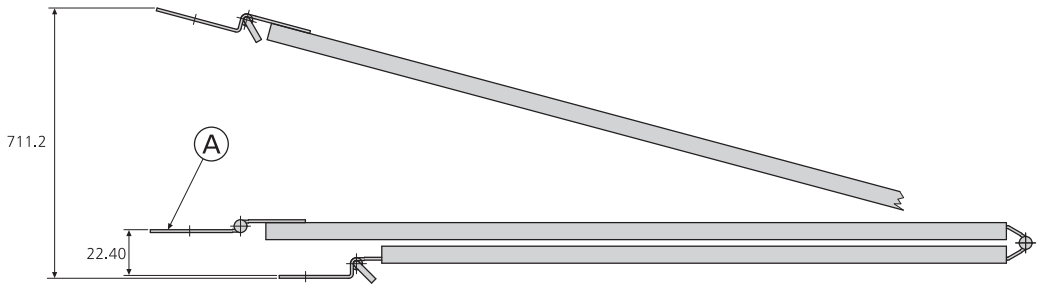

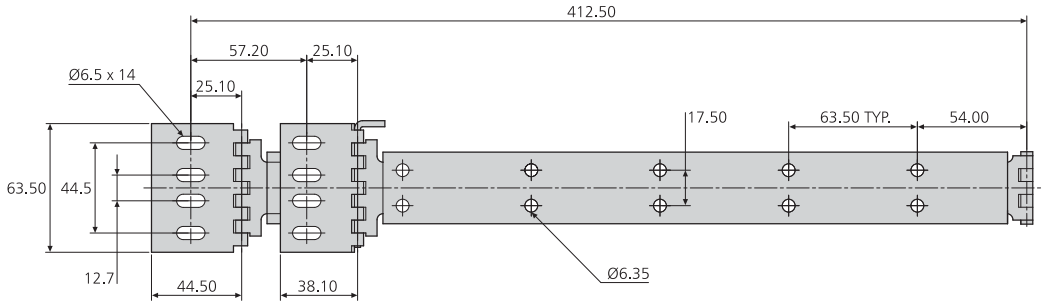

Notes:

- *Not suitable for slides over 700mm in length*
- *2 fixing holes used on each end of bracket is recommended*

A= Cabinet hinge

Brackets

Escuadras
Staffe

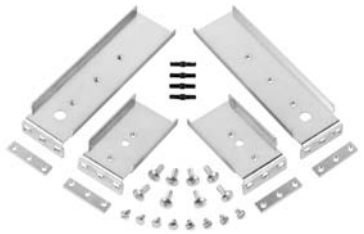

DZ63374-4
(2907)

DZ63460-4
(0201, 0204, 0301, 0305)

DZ63480-4
(3301, 3307, 3308)

DZ63450-4
(0201, 0204, 0301, 0305)

DZ65490-4
(3607, 5321, 5321SC)

DZ63470-4
(0305*)

63xxx	mm											
	SL	A (F)	A (R)	B (4)	B (3)	C	D	E	G	H	J	K
DZ63450-4	0201, 0204, 0301, 0305	69.9	266.7	57.2	-	15.0	6.35	12.7	-	76.2	82.6	165.1
DZ63460-4	0201, 0204, 0301, 0305	69.9	266.7	-	43.7	15.0	6.5	15.9	-	76.2	82.6	165.1
DZ63470-4	0305*	76.5	274.6	69.9(F) 64.0(R)	-	19.8	5.5(F) 7.4(R)	15.9	48.0	76.2	82.6	165.1
DZ63480-4	3301, 3307, 3308	114.6	114.6	-	44.5	18.3	7.4	15.2	66.0	-	-	-
DZ65490-4	3607, 5321, 5321SC	140.0	140.0	60.0 -	-	14.0	5.5	15.9	96.0	-	-	-
DZ63374-4	2907	77.2	153.4		44.2	17.5	-	15.9	-	-	-	-

** Recessed*	*(F) Front*	*(R) Rear*	*(4) 4 hole*	*(3) 3 hole*
** Empotrado*	*(F) Parte delantera*	*(R) Posterior*	*(4) 4 agujeros*	*(3) 3 agujeros*
** A incasso*	*(F) Anteriore*	*(R) Posteriore*	*(4) 4 fori*	*(3) 3 fori*

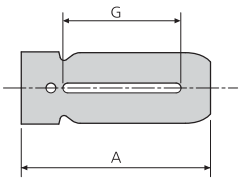

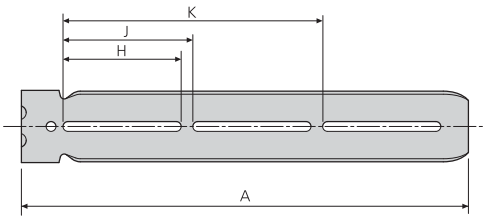

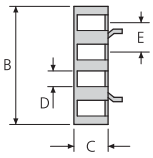

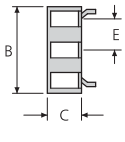

Bar nuts
Tuercas de barra
Dadi a barra

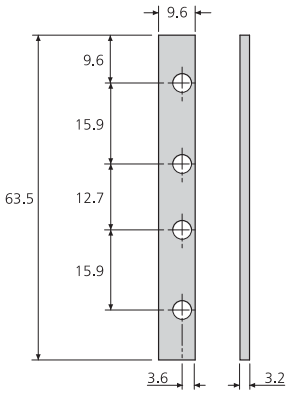

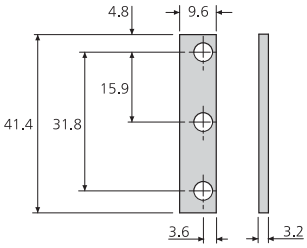

Notes:

- *Each kit comprises 4 brackets, 4 bar nuts, 8 screw kits for brackets, 8 fillister head screws. Customer supplies captive nuts.*

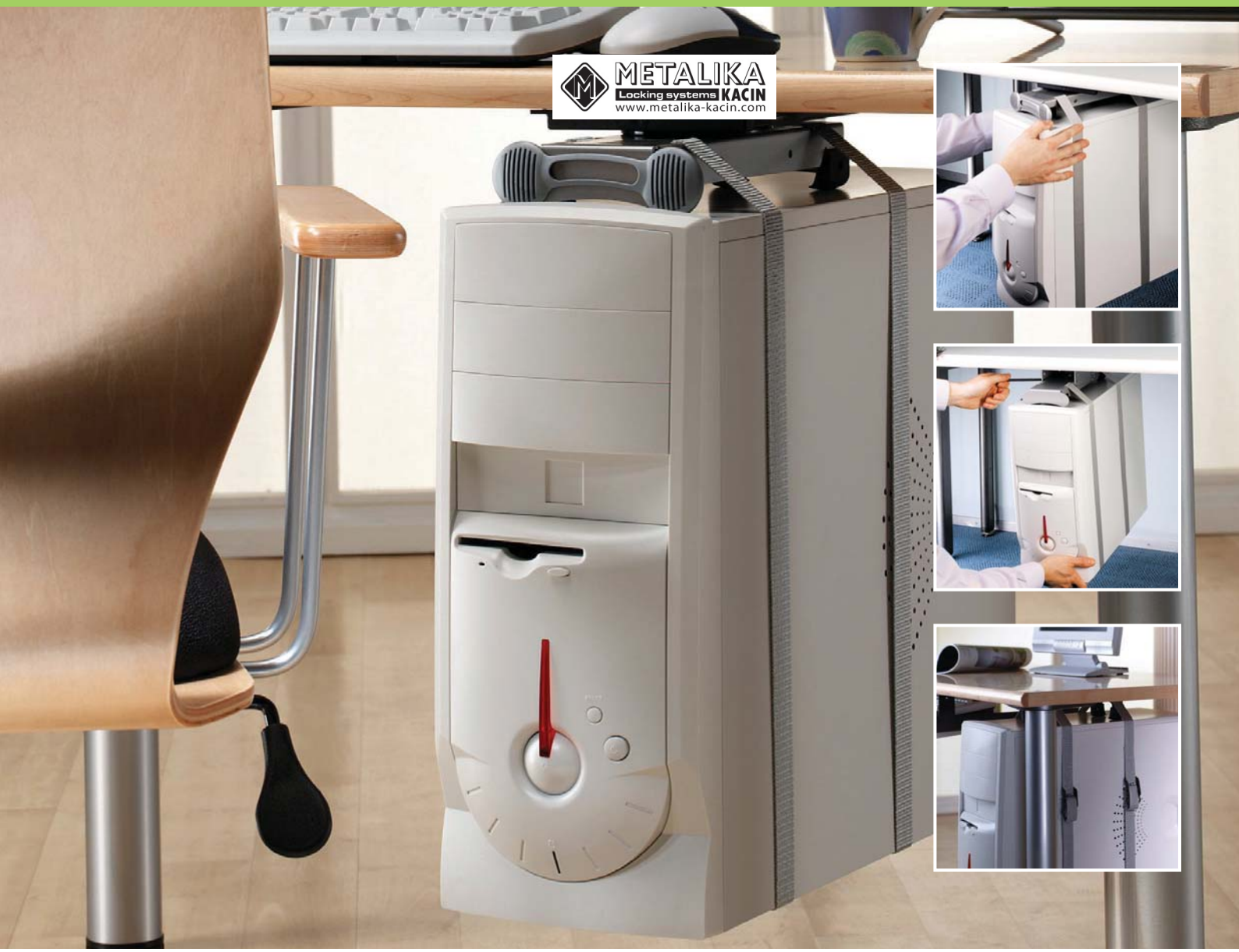

CPU holders

Soporte de CPU

Supporti per CPU

- The computer is held off the floor, well away from feet, dust and static and yet is easy to reach
- Straps hold most shapes and sizes of CPU - up to 34kg in weight and 163cm perimeter
- Soft gripper feet hold the CPU firmly
- Over centre buckle gives easy and secure tightening of straps
- Vertical mounting standard - horizontal mounting with optional adapter plates
- Ideal for height adjusting desk systems - the CPU moves with the desk top and prevents cable stretching

- El ordenador se sujeta en la parte inferior de la mesa, alejado de los pies, del polvo y de la electricidad estática, pero al mismo tiempo, al alcance de su mano
- Las correas pueden sujetar la mayoría de formas y tamaños de CPUs - hasta 34kg de peso y 163 cm de perímetro
- Unos suaves pies de agarre sujetan la CPU firmemente
- Una hebilla autotensante proporciona un apretado fácil y seguro de las correas
- Montaje vertical estándar - montaje horizontal con placas adaptadoras opcionales
- Ideal para sistemas de escritorio de ajuste de altura - la CPU se mueve con la parte superior del escritorio e impide el estirado de los cables

- Il computer è sollevato dal pavimento, lontano da piedi e dalla polvere statica, ma è a portata di mano
- Delle cinghie trattengono la maggior parte di forme e dimensioni di CPU - fino a un peso di 34kg e ad un perimetro di 163cm
- Piedini a presa morbida trattengono fermamente la CPU
- La fibbia auto-serrante consente il serraggio facile e sicuro delle cinghie
- Montaggio verticale standard - montaggio orizzontale con piastre adattatrici opzionali

CPU holders

Soporte de CPU
Supporti per CPU

CPUH-004

- CPU holder fixes directly to the underside of the desk using a bracket
- CPU can be installed and dismounted easily and quickly using a locating pin release mechanism
- No need to dismantle the CPU holder or release the strap tension to remove CPU
- Order codes:

  Black: EGCPUH-004BK

  Silver: EGCPUH-004SL

CPUH-005

- The holder is mounted under the desk on a glide track and can be swivelled through 360° at any position along the track
- Easy access to service cables and ports
- Silver pull grip supplied with black and silver versions
- Track length 451mm (455mm installed)
- Order codes:

  Black: EGCPUH-005BK

  Silver: EGCPUH-005SL

CPUH-201

- Holder attaches directly to underside of desk
- Order codes:

  Black: EGCPUH-201BK

  Silver: EGCPUH-201SL

Horizontal mounting plates

- Optional adapter plates for horizontal CPUs (2 brackets)
- For use with all Accuride CPU holders
- Order codes:

  Black: EGACCE-001BK

  Silver: EGACCE-001SL

CPUH-004

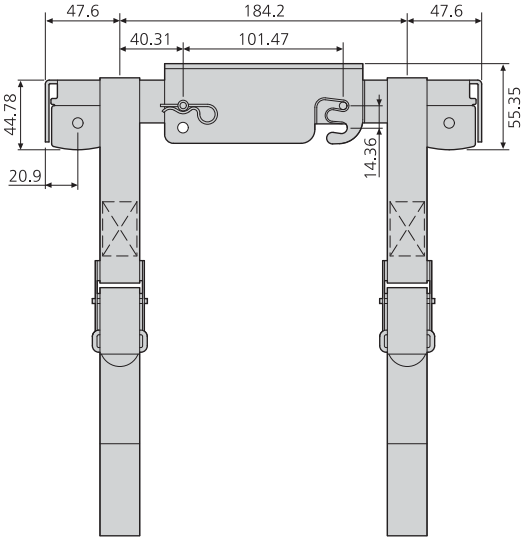

CPUH-201

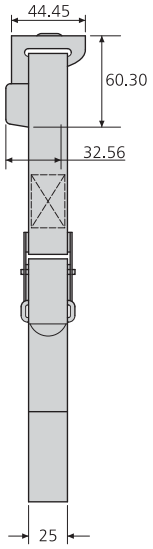

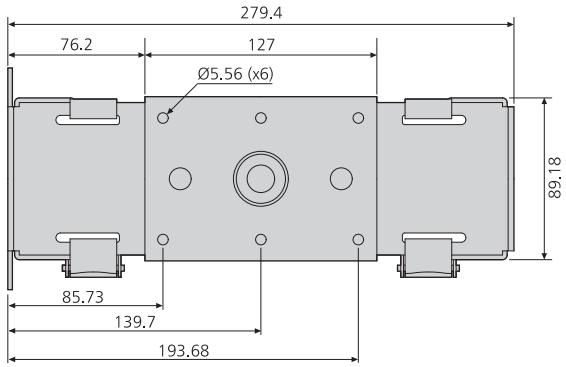

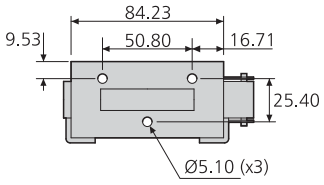

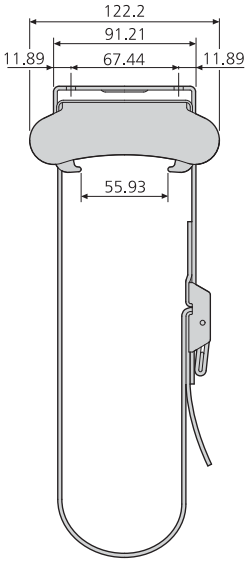

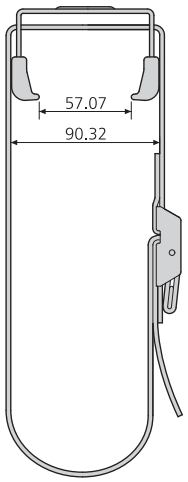

CPUH-005

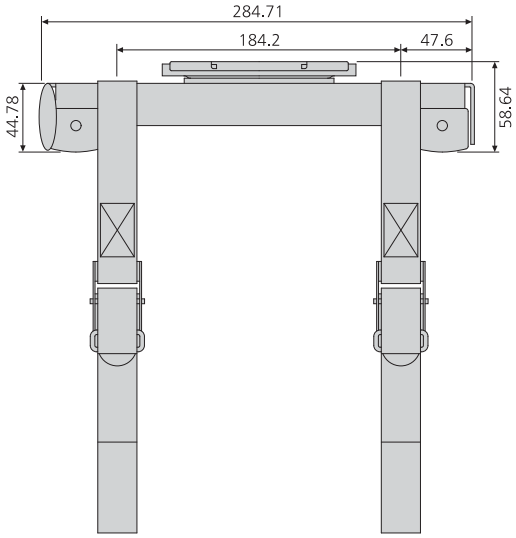
284.71
184.2
47.6
44.78
58.64

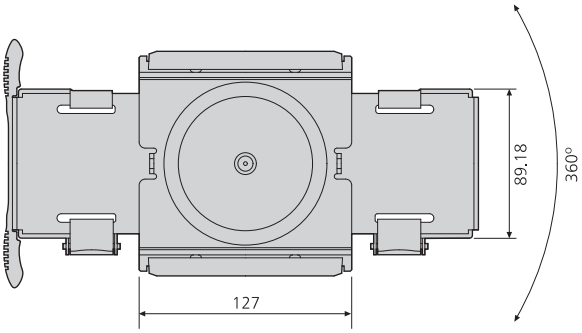
89.18
360°
127

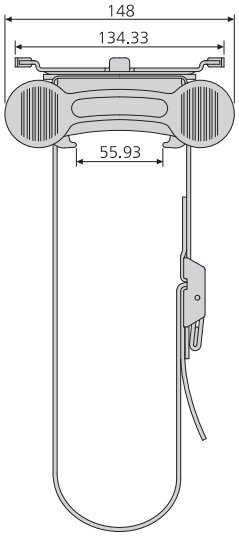
148
134.33
55.93

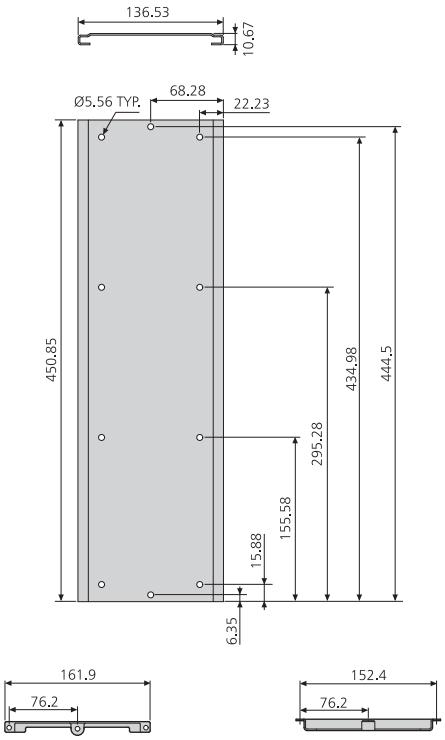
136.53
10.67
Ø5.56 TYP.
68.28
22.23
450.85
434.98
444.5
295.28
155.58
15.88
6.35
161.9
76.2
152.4
76.2