Toggle latches without strike

These latches are used with strike part numbers 16-7-3414, 16-7-3418, 16-7-3529 and 16-7-3531 (see below)
Padlockable options available are part numbers 16-7-3394 and 16-7-3396

A	B	C	note	part number	material	finish	weight
50	22	12.5	undrilled	**16-7-3416**	steel	raw	20g
50	22	12.5	drilled	**16-7-3410**	steel	zinc plated	20g
50	22	12.5	drilled	**16-7-3525**	304 stainless steel	raw	20g
49	22.5	11.8	undrilled	**16-7-3527**	304 stainless steel	raw	20g

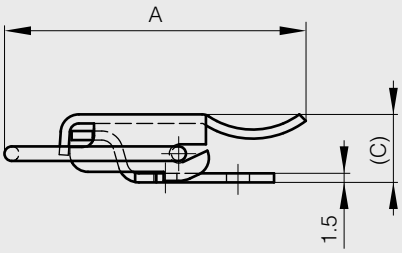

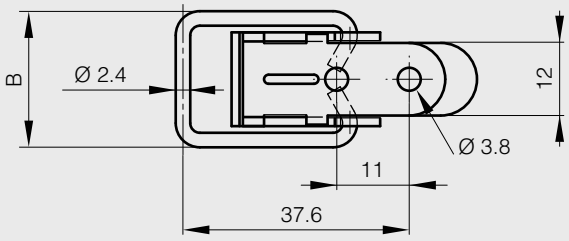

Strikes for part numbers 16-7-3410, 16-7-3416, 16-7-3525 and 16-7-3527

A	B	C	D	E	note	part number	material	finish	weight
12.8	24	1.5			undrilled	**16-7-3418**	steel	raw	3.5g
12.8	24	1.5	14	5	drilled	**16-7-3414**	steel	zinc plated	3.5g
12.8	24	1.5	14	5	drilled	**16-7-3529**	304 stainless steel	raw	3.5g
12.8	24	1.5			undrilled	**16-7-3531**	304 stainless steel	raw	3.5g

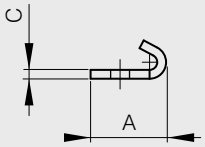

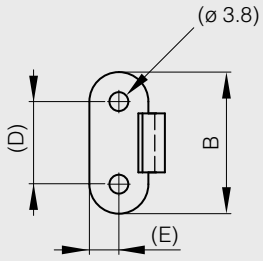

Toggle latch with strike

A	B	C	part number	material	finish	weight
52	41	13.5	**16-7-3845**	steel	zinc plated	23g
52	41	13.5	**16-7-3846**	304 stainless steel	raw	23g

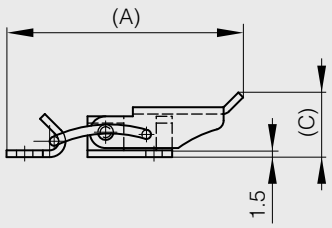

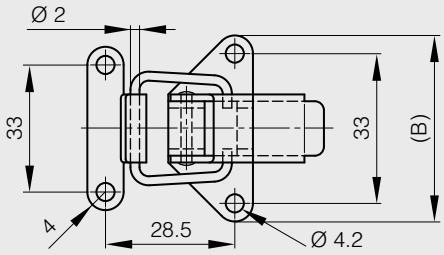

Toggle latch without strike

This latch is used with strike, part numbers 16-7-3873 and 16-7-3874 (see below)

A	B	C	part number	material	finish	weight
58.1	23.4	12.7	**16-7-3875**	steel	zinc plated	32g
58.1	23.4	12.7	**16-7-3876**	304 stainless steel	raw	32g

Strikes for part numbers 16-7-3875 and 16-7-3876

part number	material	finish	weight
16-7-3873	steel	zinc plated	3.5g
16-7-3874	304 stainless steel	raw	3.5g

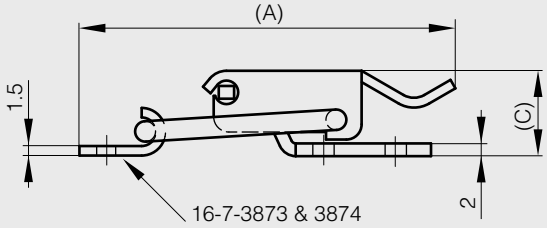

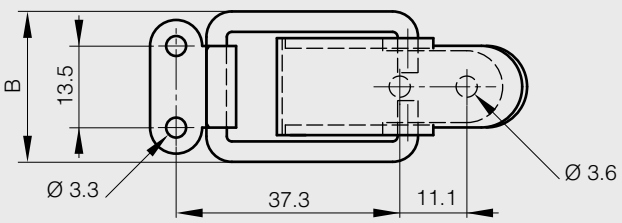

Toggle latches without strike

These latches are used with strike part numbers 16-7-3415, 16-7-3419, 16-7-3530 and 16-7-3532 (see below)
Padlockable options are available for part numbers 16-7-3395, 16-7-3397, 16-7-3719, 16-7-3723 and 16-7-3724

A	B	C	note	part number	material	finish	weight
80.2	32	14.5	drilled	**16-7-3411**	steel	zinc plated	53.5g
80.2	32	14.5	drilled	**16-7-3526**	304 stainless steel	raw	53.5g
80.2	32	14.5	undrilled	**16-7-3528**	304 stainless steel	raw	53.5g

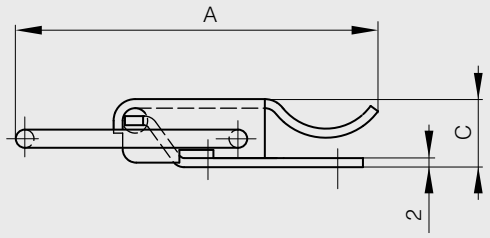

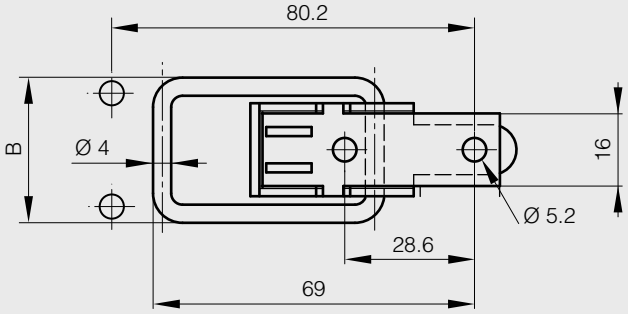

Strikes for part numbers 16-7-3411, 16-7-3526 and 16-7-3528

A	B	C	D	E	note	part number	material	finish	weight
20	26.2	2			undrilled	**16-7-3419**	steel	raw	9g
20	26.2	2	15	5.1	drilled	**16-7-3415**	steel	zinc plated	9g
20	26.2	2			undrilled	**16-7-3532**	304 stainless steel	raw	9g
20	26.2	2	15	5.1	drilled	**16-7-3530**	304 stainless steel	raw	9g

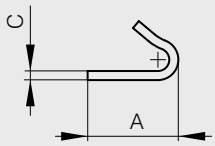

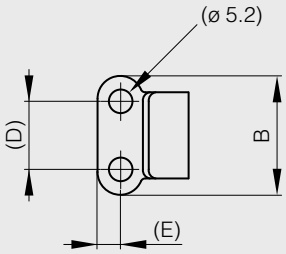

Toggle latch without strike

METALIKA Locking systems KAČIN www.metalika-kacin.com

This latch is used with strike part number 16-7-3881 (see below)

A	B	C	part number	material	finish	weight
89.7	33	14.2	**16-7-3880**	steel	zinc plated	68g

Strike for part number 16-7-3880

part number	material	finish	weight
16-7-3881	steel	zinc plated	9g

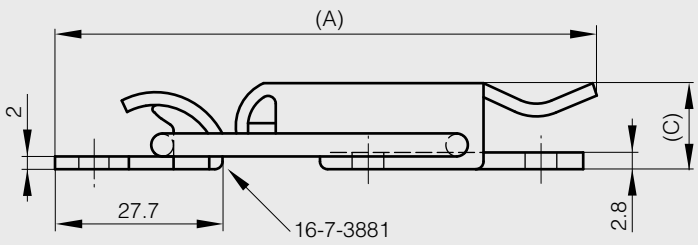

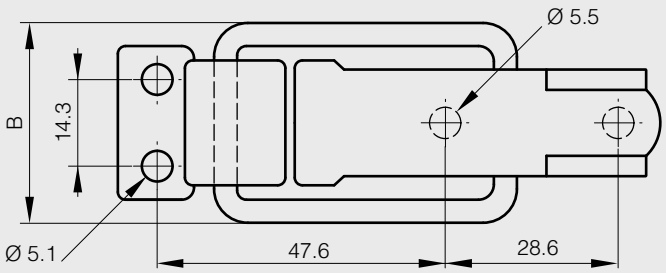

Toggle latches without strike

Punched holes
These latches are used with strike part numbers 16-7-3551, 16-7-3557 and 16-7-3601 (see below)

A	B	C	part number	material	finish	weight
88.5	40	19.5	**16-7-3424**	steel	raw	106g
88.5	40	19.5	**16-7-3508**	steel	zinc plated	106g
88.5	40	19.5	**16-7-3829**	304 stainless steel	raw	106g

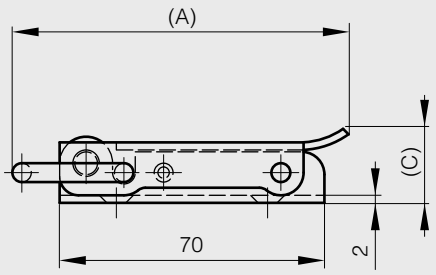

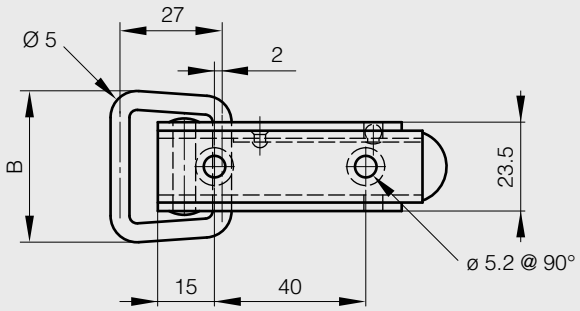

Punched holes.
This latch is used with strike part numbers 16-7-3551, 16-7-3406, 16-1-4038 and 16-7-3870 (see below).
Padlockable options are available for part numbers 16-7-3426 and 16-7-3664.

A	B	C	part number	material	finish	weight
122	45	16	**16-7-3502**	steel	zinc plated	161g

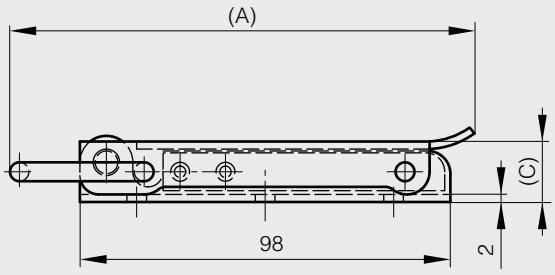

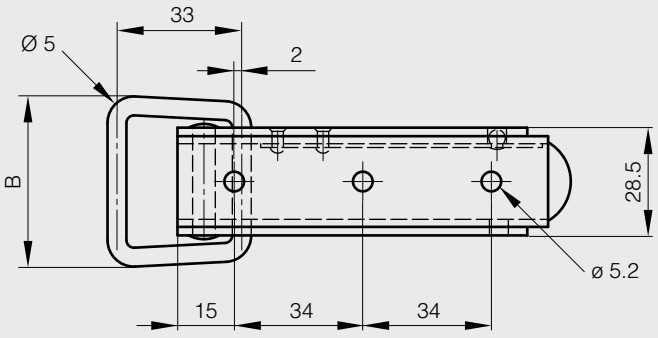

Strikes for part numbers 16-7-3424, 16-7-3502, 16-7-3508 and 16-7-3829

METALIKA Locking systems KACIN www.metalika-kacin.com

A	B	part number	material	finish	weight
28	25	**16-7-3557**	steel	raw	24g
28	25	**16-7-3551**	steel	zinc plated	24g
28	25	**16-7-3601**	304 stainless steel	raw	24g

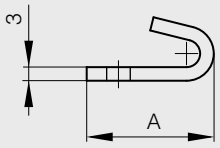

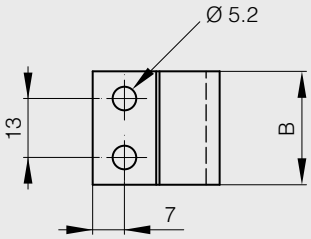

Other strikes available for part numbers 16-7-3424, 16-7-3502, 16-7-3508 and 16-7-3829

Drilled and countersunk for 4.5 mm diameter screws

A	B	part number	material	finish	weight
85	25	**16-7-3404**	steel	raw	57g
85	25	**16-7-3406**	steel	zinc plated	57g
85	25	**16-7-3828**	304 stainless steel	raw	57g

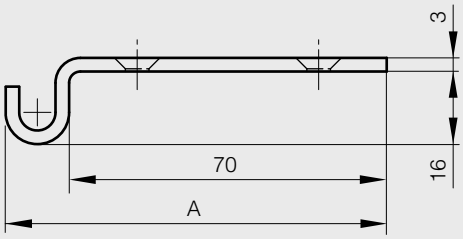

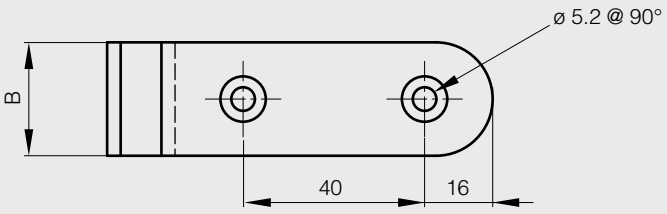

Other strikes available for pt. nos. 16-7-3424, 16-7-3502, 16-7-3508 and 16-7-3829

Drilled and countersunk for 4.5 mm diameter screws

A	B	C	F	G	S	part number	material	finish	weight
63	25	3	8.8	26	4.5	**16-1-4038**	steel	zinc plated	42g
63.5	20	2	7.9	19	5.4	**16-7-3870**	steel	zinc plated	24g

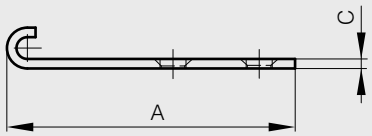

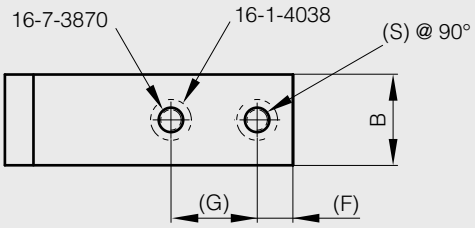

Other strike for part number 16-7-3502

A	B	part number	material	finish	weight
93	30	**16-7-3407**	steel	zinc plated	82.5g

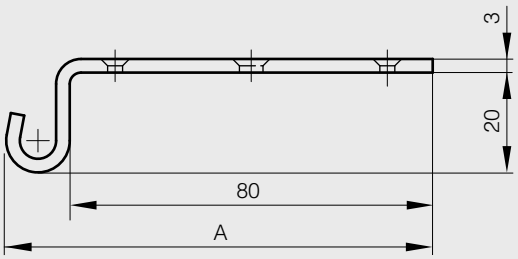

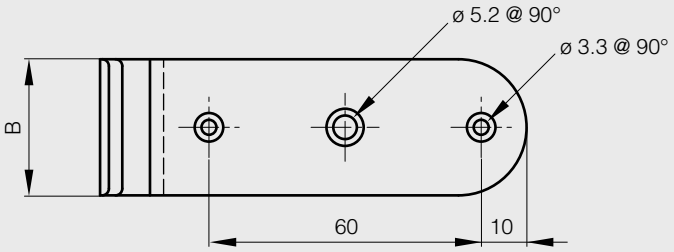

Toggle latches (consistent tension)

METALIKA Locking systems KACIN
www.metalika-kacin.com

This latch is used with strike part number 16-7-3874 (see below)

A	B	C	part number	material	finish	weight
58.6	20.6	12.7	**16-7-3891**	304 stainless steel	raw	27g

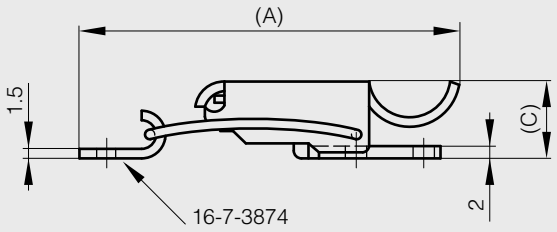

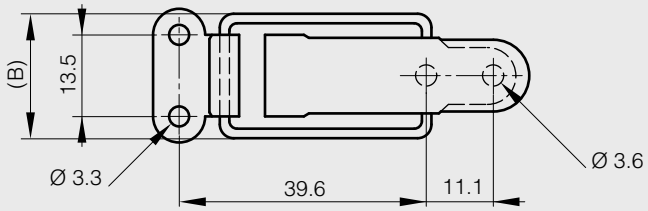

Toggle latches (consistent tension)

This latch is used with strike part number 16-7-3874 (see below)

A	B	C	part number	material	finish	weight
61.7	27	12.7	**16-7-3888**	304 stainless steel	raw	27g

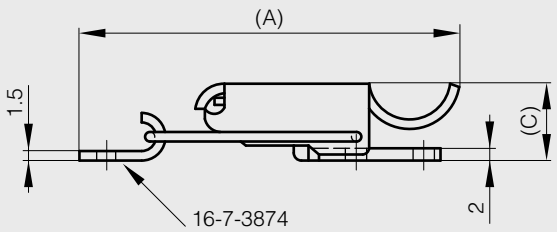

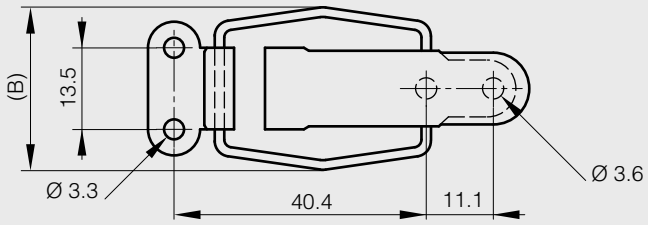

Strike for part numbers 16-7-3888 and 16-7-3891

part number	material	finish	weight
16-7-3874	304 stainless steel	raw	3.5g

Soft toggle latch

new!

A	B	C	part number	material	finish	weight
96.5	29	20	**16-1-9006**	elastomer	black	36g

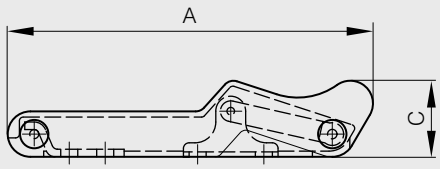

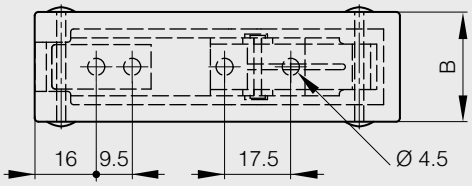

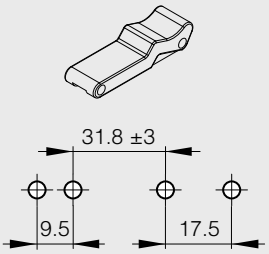

Heavy duty toggle latch

new!

This latch is in raw steel with the loop in zinc plated steel.

A	part number	material	finish	weight
134	**16-1-4150**	steel	raw	413g

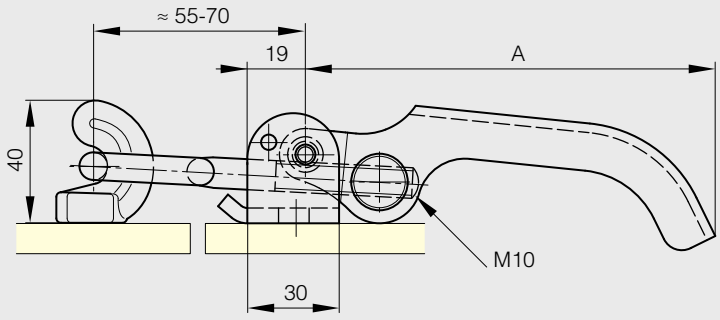

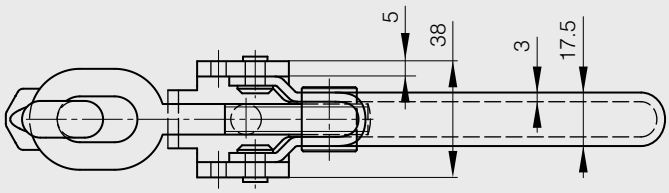

Spring loaded toggle latch without strike

METALIKA Locking systems KAČIN www.metalika-kacin.com

This latch is used with strike part number 16-7-3907 (see below)

A	B	C	part number	material	finish	weight
35.8	12.3	7.9	**16-7-3906**	304 stainless steel	raw	9g

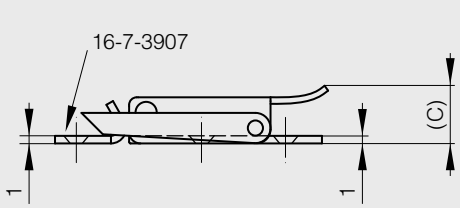

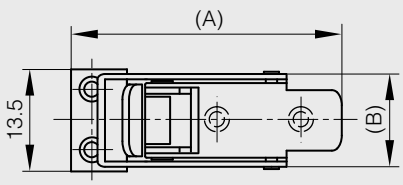

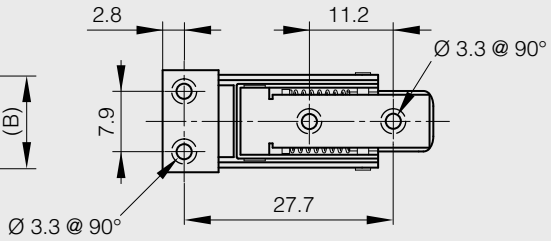

Strike for part number 16-7-3906

part number	material	finish	weight
16-7-3907	304 stainless steel	raw	4.5g

Spring loaded toggle latches without strike

These latches are used with strike part numbers 16-7-3915 and 16-7-3916 (see below)

A	B	C	note	part number	material	finish	weight
70.8	28.7	10.2		**16-7-3910**	steel	zinc plated	50g
70.8	28.7	10.2		**16-7-3911**	304 stainless steel	raw	50g
70.8	28.7	10.2	with seal wire hole	**16-7-3920**	304 stainless steel	raw	50g

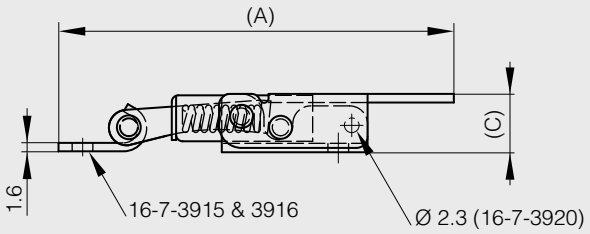

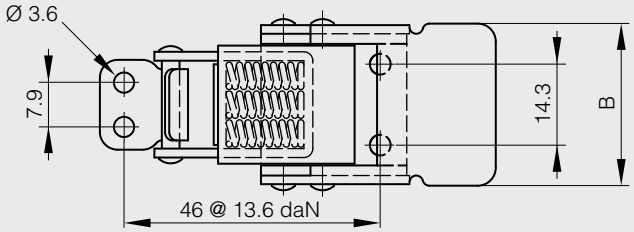

This latch is used with strike part number 16-7-3916 (see below).
A padlockable option is available for part number 16-7-3917.
The push button prevents accidental opening.

A	B	C	note	part number	material	finish	weight
70.9	28.7	14.7	with push button to open / no seal wire hole	**16-7-3918**	304 stainless steel	raw	50g

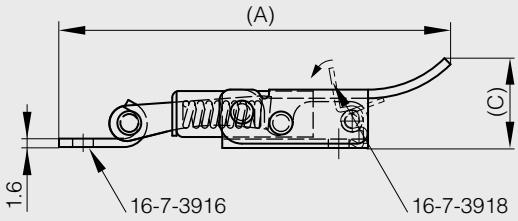

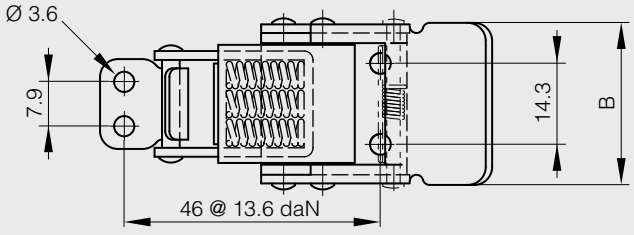

Strikes for part numbers 16-7-3910, 16-7-3911, 16-7-3918 and 16-7-3920

METALIKA Locking systems KAÇIN www.metalika-kacin.com

part number	material	finish	weight
16-7-3915	steel	zinc plated	4.5g
16-7-3916	304 stainless steel	raw	4.5g

Spring loaded toggle latches without strikes

These latches are used with strike part numbers 16-7-3738, 16-7-3739, 16-7-3741 and 16-7-3742 (see below)
Padlockable options are available for part numbers 16-7-3759 and 16-7-3760

A	B	C	part number	material	finish	weight
52	34.5	11.8	**16-7-3734**	steel	raw	27g
52	34.5	11.8	**16-7-3735**	steel	zinc plated	27g
52	34.5	11.8	**16-7-3736**	304 stainless steel	raw	27g

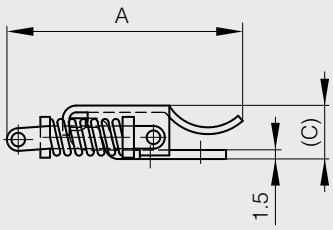

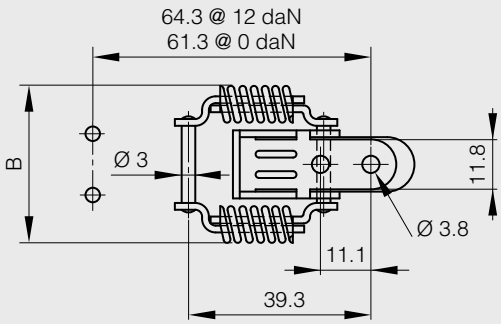

Strikes for part numbers 16-7-3734, 16-7-3735 and 16-7-3736

A	B	note	part number	material	finish	weight
28.5	20.5	undrilled	**16-7-3738**	steel	zinc plated	3.5g
28.5	20.5	drilled	**16-7-3741**	steel	zinc plated	3.5g
28.5	20.5	undrilled	**16-7-3739**	304 stainless steel	raw	3.5g
28.5	20.5	drilled	**16-7-3742**	304 stainless steel	raw	3.5g

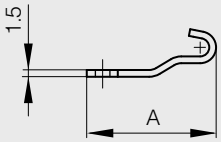

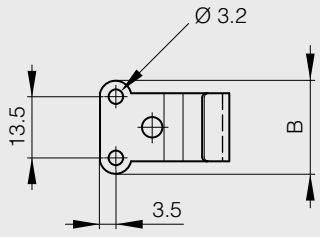

Spring loaded toggle latches without strikes

Dimension A (74mm) without tension. Dimension A can be extended up to 4mm putting the latch under tension.
The latches are used with strike part numbers 16-7-3751, 16-7-3752, 16-7-3753 and 16-7-3754 (see below)
Padlockable options are available for part numbers 16-7-3765 and 16-7-3766.

A	B	C	note	part number	material	finish	weight
74	47	15	drilled	**16-7-3746**	steel	raw	70g
74	47	15	drilled	**16-7-3747**	steel	zinc plated	70g
74	47	15	undrilled	**16-7-3745**	304 stainless steel	raw	70g
74	47	15	drilled	**16-7-3748**	304 stainless steel	raw	70g

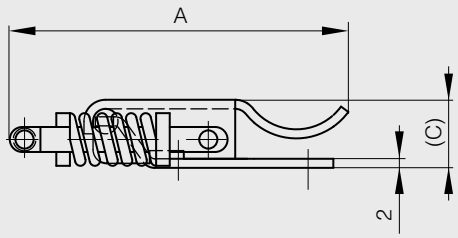

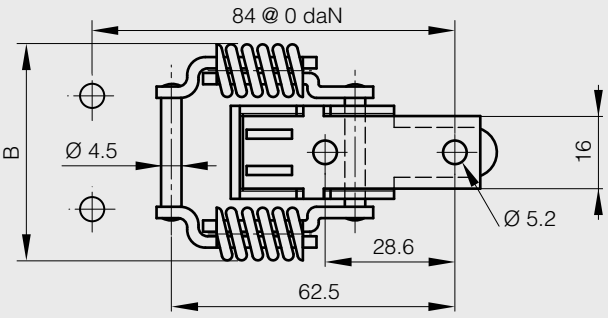

Strikes for part numbers 16-7-3745, 16-7-3746, 16-7-3747 and 16-7-3748

A	B	note	part number	material	finish	weight
36	40	drilled	**16-7-3752**	steel	raw	20g
36	40	drilled	**16-7-3753**	steel	zinc plated	20g
36	40	undrilled	**16-7-3751**	304 stainless steel	raw	20g
36	40	drilled	**16-7-3754**	304 stainless steel	raw	20g

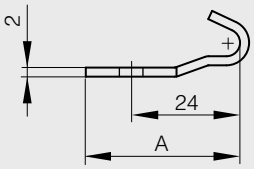

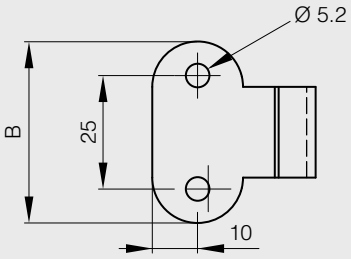

Spring loaded toggle latch without strike

METALIKA KACIN Locking systems www.metalika-kacin.com

This latch is used with strike part numbers 16-7-3404, 16-7-3406, 16-1-4038 and 16-7-3870 (see below).

A	B	C	part number	material	finish	weight
108	49.5	19.5	**16-7-3400**	steel	raw	118g
108	49.5	19.5	**16-7-3402**	steel	zinc plated	118g

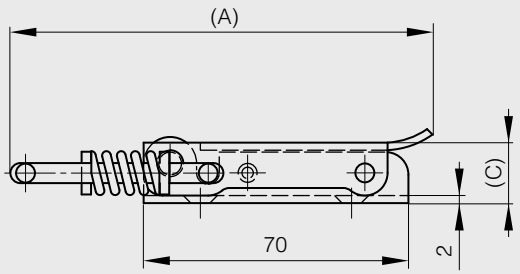

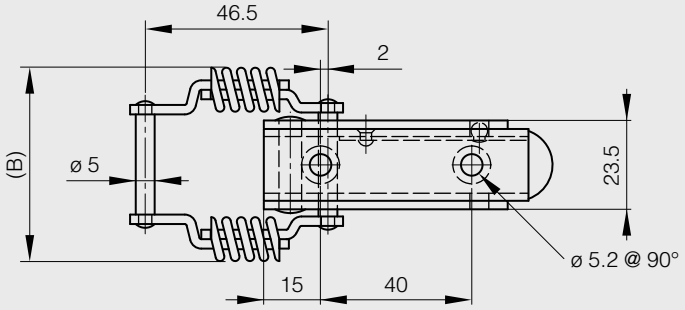

Strikes for part numbers 16-7-3400 and 16-7-3402

A	B	S	part number	material	finish	weight
85	25	5	**16-7-3404**	steel	raw	57g
85	25	5	**16-7-3406**	steel	zinc plated	57g

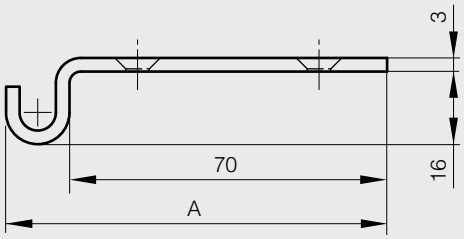

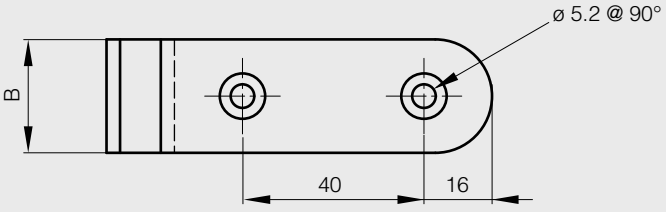

Alternative strikes for part numbers 16-7-3400 and 16-7-3402

Part number 16-7-3551 may also be used as an alternative strike.

A	B	C	F	G	S	part number	material	finish	weight
63	25	3	8.8	26	4.5	**16-1-4038**	steel	zinc plated	42g
63.5	20	2	7.9	19	5.4	**16-7-3870**	steel	zinc plated	24g

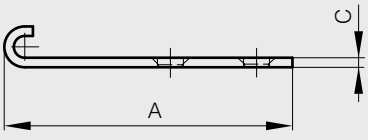

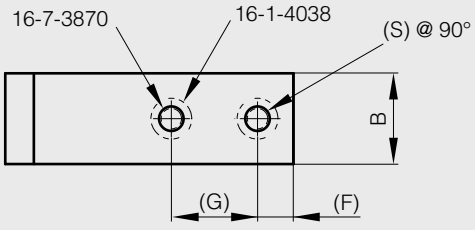

Spring hook toggle latch without strike

This latch is used with strike part number 16-7-3895 (see below).

A	B	C	part number	material	finish	weight
116.8	47.4	20.3	**16-7-3893**	steel	zinc plated	54g

Strike for part number 16-7-3893

part number	material	finish	weight
16-7-3895	steel	zinc plated	9g

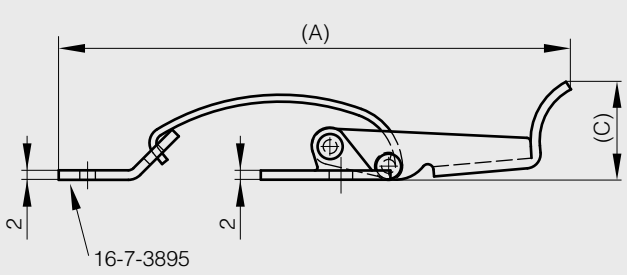

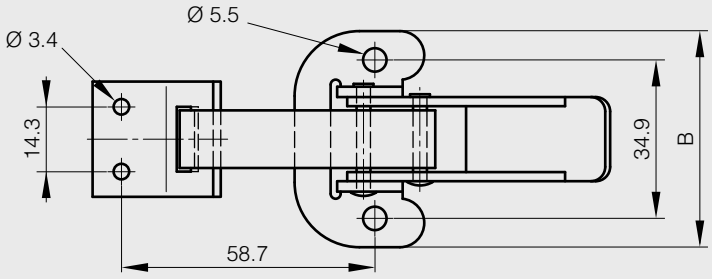

Lockable toggle latch without strike

METALIKA Locking systems KAĆIN
www.metalika-kacin.com

Complete with 2 keys.
Stainless steel shaft and zinc plated loop.
This latch is used with strike part number 16-7-3551 (see below)

A	B	C	part number	material	finish	weight
106.5	40	17	**16-1-4050**	steel	zinc plated	132g

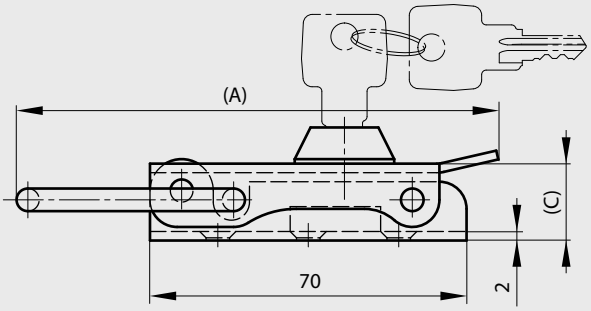

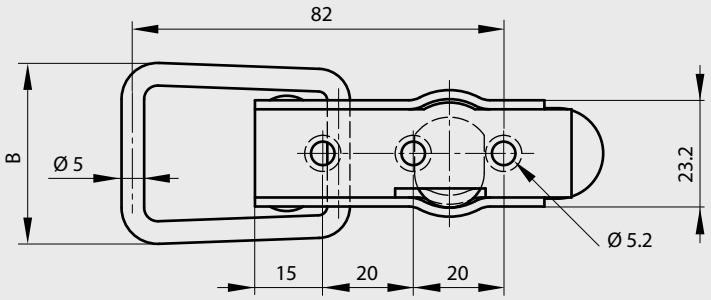

Strike for part number 16-1-4050

Possible alternative strikes: 16-1-4038, 16-7-3406 and 16-7-3870.

A	B	part number	material	finish	weight
28	25	**16-7-3551**	steel	zinc plated	24g

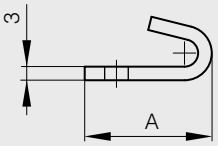

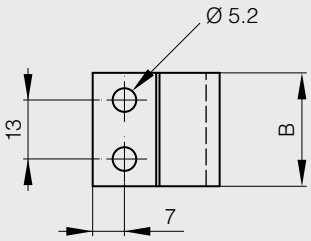

Zinc die-cast toggle latches with lockable options

new!

Available with or without keylock options.
Strike included.

A	B	C	E	F	G	note	part number	material	finish	weight
64.5	26.5	17.3	13	12	30	with key	**16-1-9003**	zinc die-cast	black	72g
64.5	26.5	17.3	13	12	30	without key	**16-1-9004**	zinc die-cast	black	72g
76	32	21	16.8	16	35.5	with key	**16-1-9001**	zinc die-cast	black	118g
76	32	21	16.8	16	35.5	without key	**16-1-9002**	zinc die-cast	black	118g

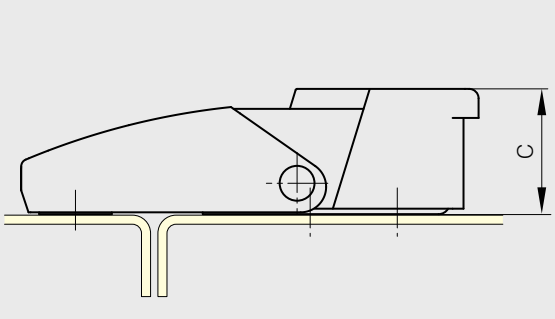

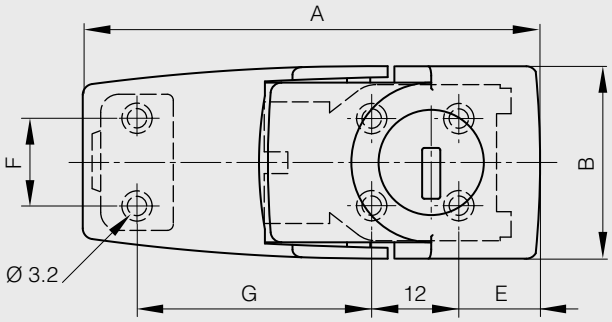

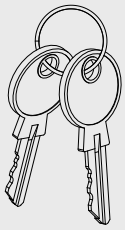

new!

Strike included

A	B	C	E	F	G	part number	material	finish	weight
92	36	25	12	12	28-32	**16-1-9005**	zinc die-cast	black	168g

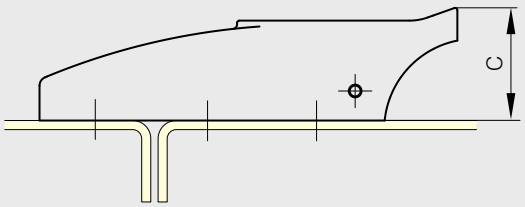

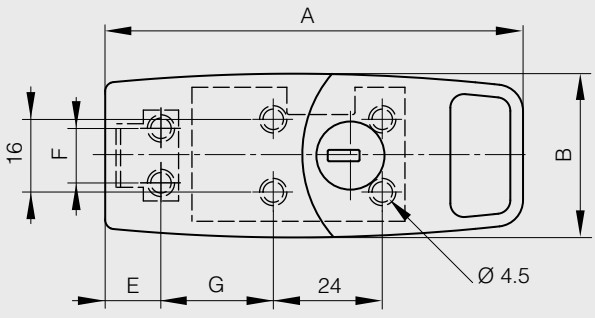

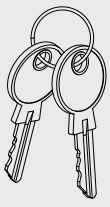

Padlockable toggle latch

METALIKA KACIN Locking systems
www.metalika-kacin.com

This latch is used with strike part numbers 16-7-3414 and 16-7-3418 (see below).

A	B	C	part number	material	finish	weight
49	22.5	19	**16-7-3396**	steel	raw	25g
49	22.5	19	**16-7-3394**	steel	zinc plated	25g

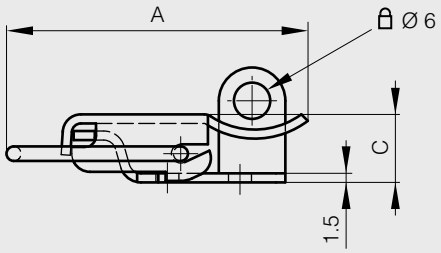

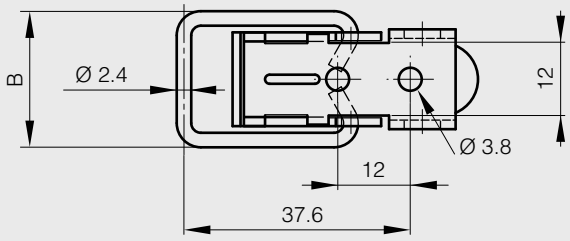

Strikes for part numbers 16-7-3394 and 16-7-3396

A	B	C	D	E	note	part number	material	finish	weight
12.8	24	1.5			undrilled	**16-7-3418**	steel	raw	3.5g
12.8	24	1.5	14	5	drilled	**16-7-3414**	steel	zinc plated	3.5g

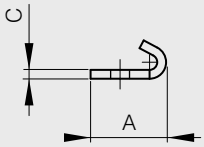

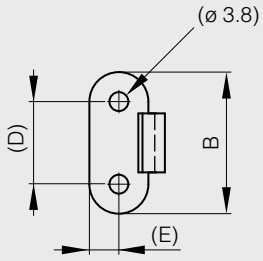

Padlockable toggle latch without strike

This latch is used with strike part number 16-7-3878 (see below).

A	B	C	part number	material	finish	weight
65	23.4	20.3	**16-7-3879**	steel	zinc plated	36g

Strike for part number 16-7-3879

part number	material	finish	weight
16-7-3878	steel	zinc plated	4.5g

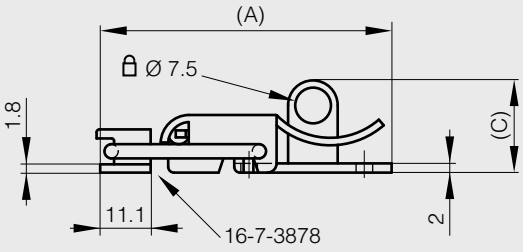

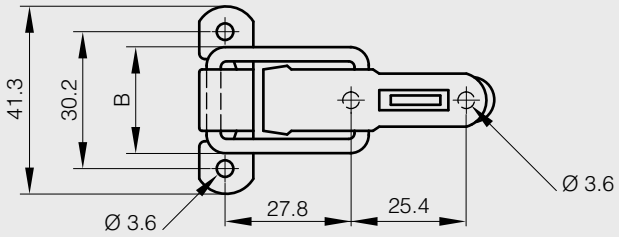

Padlockable toggle latches

METALIKA Locking systems KACIN
www.metalika-kacin.com

These latches are used with strike part numbers 16-7-3725, 16-7-3727, 16-7-3729 and 16-7-3730 (see below)

A	B	C	note	part number	material	finish	weight
80.2	32	23.5	undrilled	**16-7-3719**	steel	raw	55g
80.2	32	23.5	drilled	**16-7-3723**	steel	zinc plated	55g
80.2	32	23.5	drilled	**16-7-3724**	304 stainless steel	raw	55g

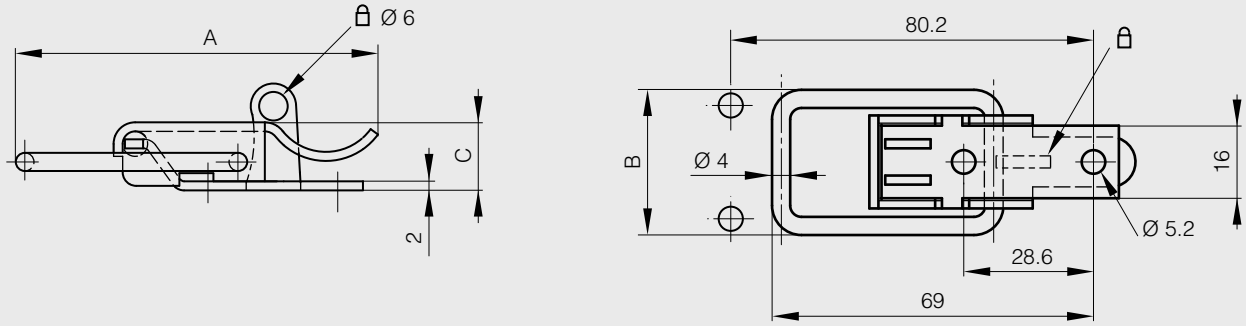

Strikes for part numbers 16-7-3719, 16-7-3723 and 16-7-3724

A	B	note	part number	material	finish	weight
27.4	26	undrilled	**16-7-3725**	steel	raw	10g
27.4	26	drilled	**16-7-3729**	steel	zinc plated	10g
27.4	26	undrilled	**16-7-3727**	304 stainless steel	raw	10g
27.4	26	drilled	**16-7-3730**	304 stainless steel	raw	10g

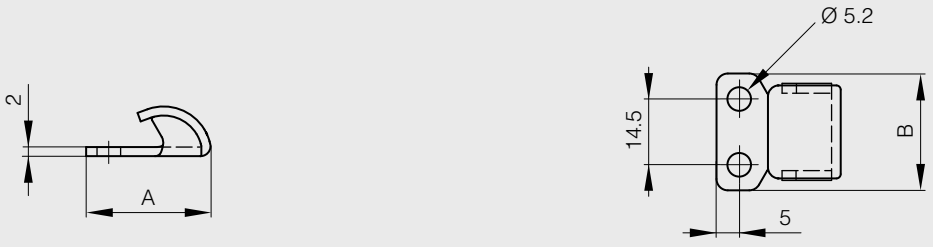

Padlockable toggle latch

This latch is used with strike part numbers 16-7-3415 and 16-7-3419 (see below)

A	B	C	note	part number	material	finish	weight
80.5	32	18.5	drilled	**16-7-3397**	steel	raw	58.5g
80.5	32	18.5	drilled	**16-7-3395**	steel	zinc plated	58.5g

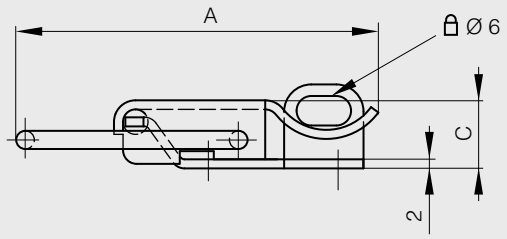

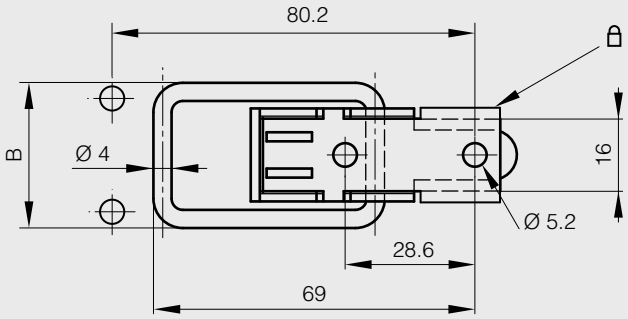

Strikes for part numbers 16-7-3395 and 16-7-3397

A	B	C	D	E	note	part number	material	finish	weight
20	26.2	2			undrilled	**16-7-3419**	steel	raw	9g
20	26.2	2	15	5.1	drilled	**16-7-3415**	steel	zinc plated	9g

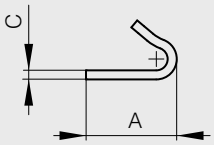

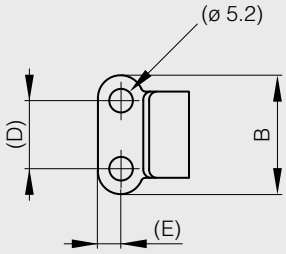

Padlockable toggle latch

METALIKA Locking systems KAÇIN www.metalika-kacin.com

This latch is used with strike part numbers 16-7-3881 and 16-7-3885 (see below)

A	B	C	part number	material	finish	weight
97.6	33	23.1	**16-7-3883**	steel	zinc plated	68g
97.5	33	23.1	**16-7-3884**	304 stainless steel	raw	68g

Strikes for part numbers 16-7-3883 and 16-7-3884

part number	material	finish	weight
16-7-3881	steel	zinc plated	9g
16-7-3885	304 stainless steel	raw	9g

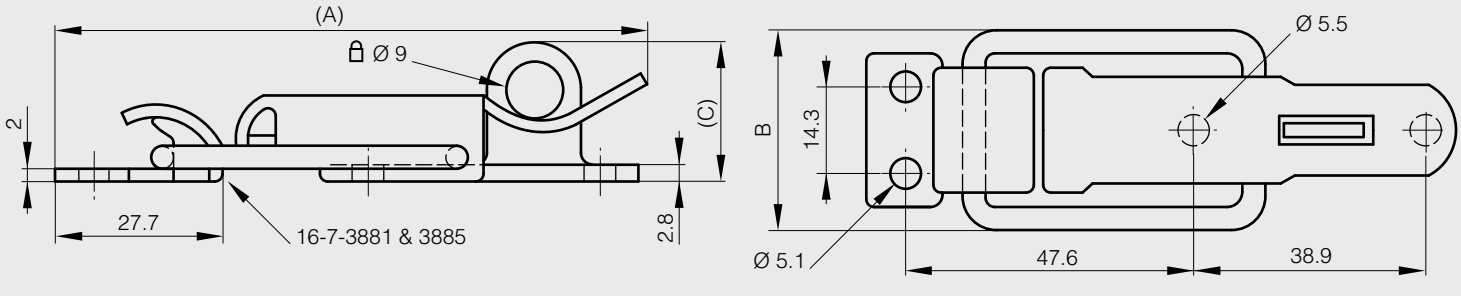

Padlockable toggle latch

This latch is used with strike part numbers 16-7-3407, 16-7-3551 and 16-7-3557
Alternative options are available (see part number 16-7-3502).

A	B	C	part number	material	finish	weight
122	45	32.5	**16-7-3426**	steel	raw	176g
122	45	32.5	**16-7-3664**	steel	zinc plated	176g

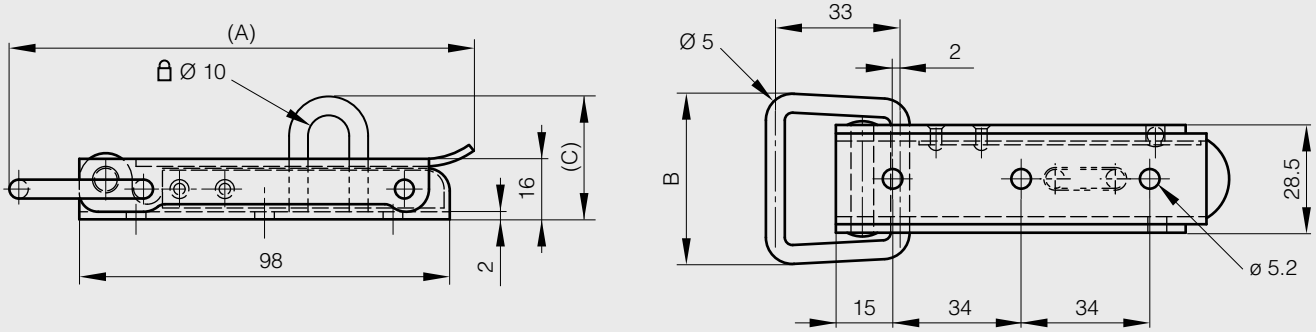

Strike for part numbers 16-7-3426 and 16-7-3664

A	B	part number	material	finish	weight
28	25	**16-7-3557**	steel	raw	24g
28	25	**16-7-3551**	steel	zinc plated	24g

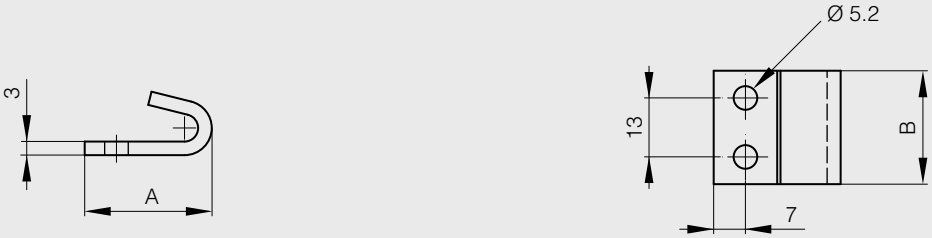

Other strike for part numbers 16-7-3426 and 16-7-3664

METALIKA Locking systems KAÇIN
www.metalika-kacin.com

A	B	S1	S2	part number	material	finish	weight
93	30	3	5	**16-7-3407**	steel	zinc plated	82.5g

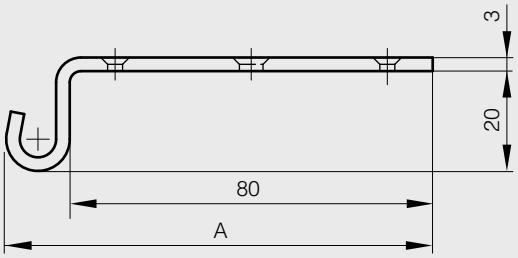

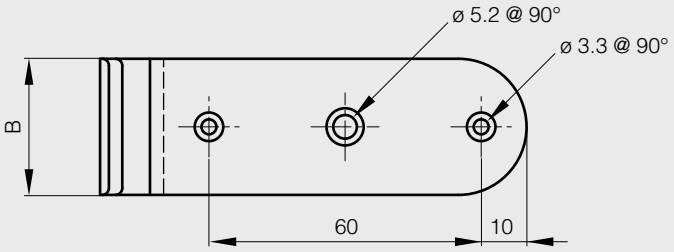

Spring loaded and padlockable toggle latch

METALIKA Locking systems KAÇIN www.metalika-kacin.com

Dimension A (52mm) without tension. Dimension A can be extended up to 3mm putting the latch under tension.
These latches are used with strike part numbers 16-7-3738, 16-7-3739, 16-7-3741 and 16-7-3742 (see below).

A	B	C	part number	material	finish	weight
52	34.5	19.25	**16-7-3759**	steel	zinc plated	32g
52	34.5	19.25	**16-7-3760**	304 stainless steel	raw	32g

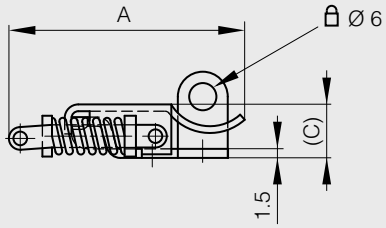

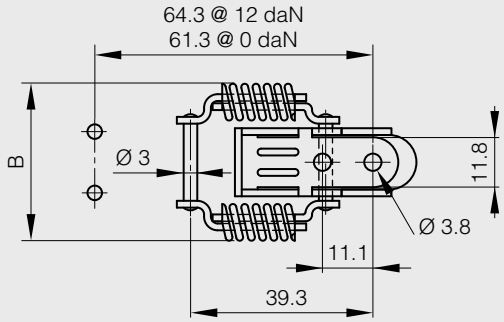

Strikes for part numbers 16-7-3759 and 16-7-3760

A	B	note	part number	material	finish	weight
28.5	20.5	undrilled	**16-7-3738**	steel	zinc plated	3.5g
28.5	20.5	drilled	**16-7-3741**	steel	zinc plated	3.5g
28.5	20.5	undrilled	**16-7-3739**	304 stainless steel	raw	3.5g
28.5	20.5	drilled	**16-7-3742**	304 stainless steel	raw	3.5g

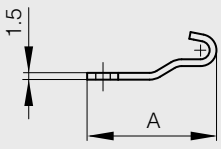

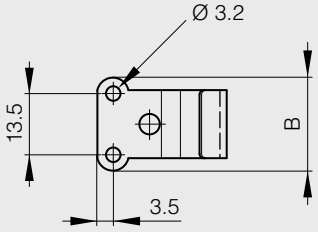

Spring loaded and padlockable toggle latch

METALIKA KACIN Locking systems www.metalika-kacin.com

Dimension A (74mm) without tension. Dimension A can be extended up to 4mm putting the latch under tension.
This latch is used with strike part numbers 16-7-3751, 16-7-3752, 16-7-3753 and 16-7-3754 (see below)

A	B	C	part number	material	finish	weight
74	47	18.5	**16-7-3765**	steel	zinc plated	75g
74	47	18.5	**16-7-3766**	304 stainless steel	raw	75g

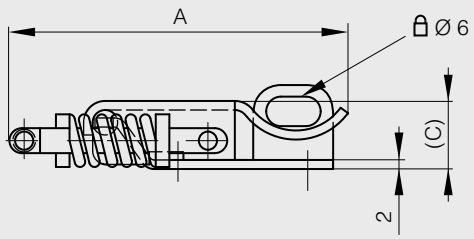

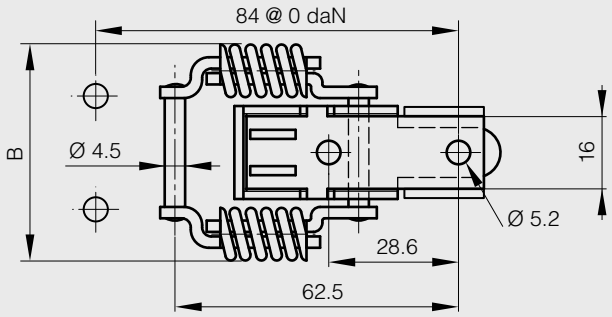

Strikes for part numbers 16-7-3765 and 16-7-3766

A	B	note	part number	material	finish	weight
36	40	drilled	**16-7-3752**	steel	raw	20g
36	40	drilled	**16-7-3753**	steel	zinc plated	20g
36	40	undrilled	**16-7-3751**	304 stainless steel	raw	20g
36	40	drilled	**16-7-3754**	304 stainless steel	raw	20g

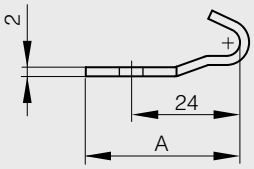

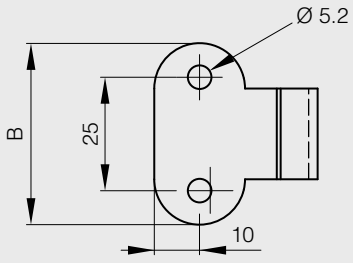

Spring loaded and padlockable toggle latch

This latch is used with strike part number 16-7-3916 (see below)

A	B	C	part number	material	finish	weight
70.9	28.7	23.1	**16-7-3917**	304 stainless steel	raw	50g

Strike for part number 16-7-3917

part number	material	finish	weight
16-7-3916	304 stainless steel	raw	4.5g

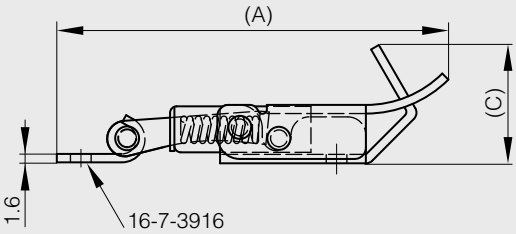

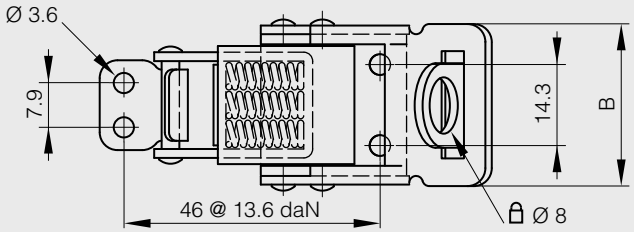

Adjustable toggle latch - padlockable

METALIKA KACIN Locking systems www.metalika-kacin.com

This latch is used with strike part numbers 16-7-3939 and 16-7-3940 (see below)

A	B	C	part number	material	finish	weight
70.6	28.2	16	**16-7-3937**	steel	zinc plated	50g
70.6	28.2	16	**16-7-3938**	304 stainless steel	raw	50g

Strike for part numbers 16-7-3937 and 16-7-3938

Strikes for part numbers 16-7-3932, 16-7-3933, 16-7-3934, 16-7-3936 16-7-3937 and 16-7-3938

part number	material	finish	weight
16-7-3939	steel	zinc plated	4.5g
16-7-3940	304 stainless steel	raw	4.5g

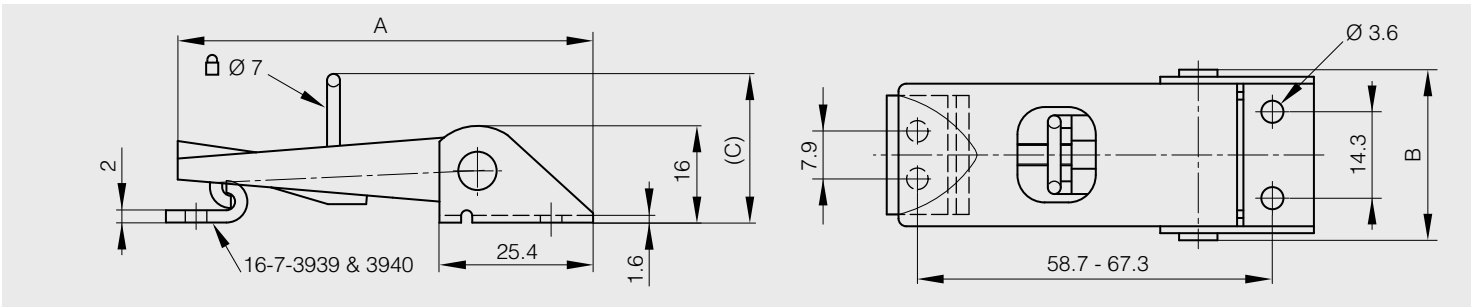

Adjustable toggle latches with strike - padlockable

A	B	C	C1	C2	D	E	F	G	H	J	K	L	note	part number	material	finish	weight
82	27	19	2	2	4	14	5	10	62-72	22	11	14	82<A<92	**16-7-4018**	steel	zinc plated	48g
109	34	18	2.5	3	5	17	6.5	10	109-120	27	16	18	109<A<120	**16-7-4020**	steel	zinc plated	102g
117	39	22	3	2.5	6	20	6.5	18	117-128	33	15	20	117<A<128	**16-7-4021**	steel	zinc plated	124g
82	27	19	2	2	4	14	5	10	62-72	22	11	14	82<A<92	**16-7-4025**	304 stainless steel	raw	48g
109	34	18	2.5	3	5	17	6.5	10	109-120	27	16	18	109<A<120	**16-7-4027**	304 stainless steel	raw	102g
117	39	22	3	2.5	6	20	6.5	18	117-128	33	15	20	117<A<128	**16-7-4028**	304 stainless steel	raw	124g

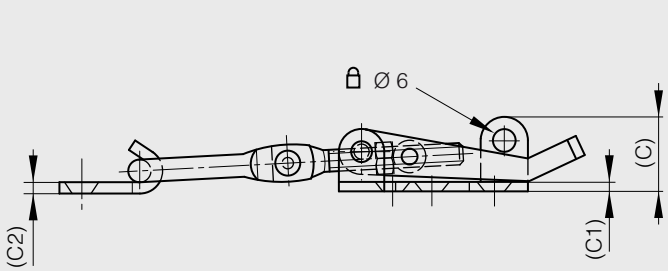

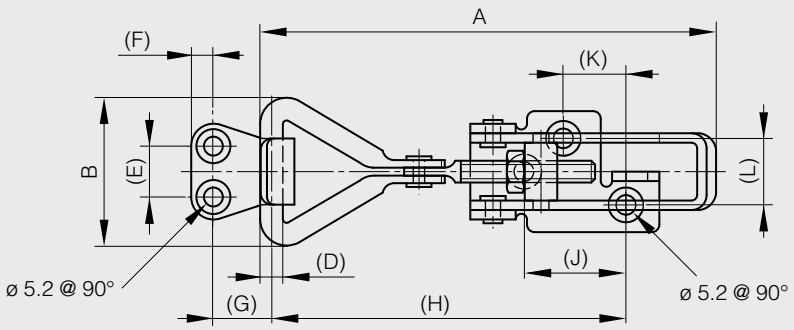

Adjustable toggle latches with strike - padlockable

A	B	C	note	part number	material	finish	weight
174	50	27	174<A<186	**16-7-4023**	steel	zinc plated	236g
174	50	27	174<A<186	**16-7-4030**	304 stainless steel	raw	236g

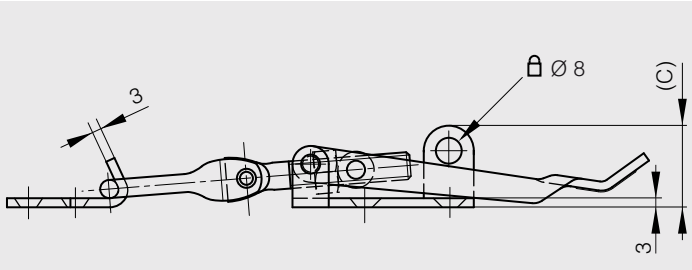

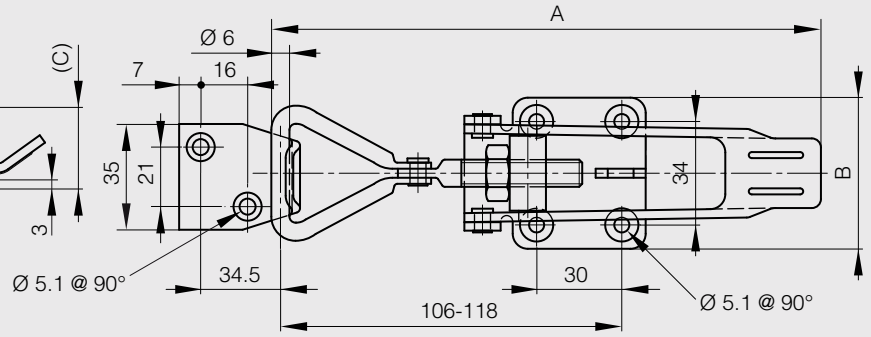

Adjustable toggle latch with strike

METALIKA KAČIN Locking systems www.metalika-kacin.com

Dimension A is adjustable / 60mm to 65mm

A	B	C	note	part number	material	finish	weight
60	22	10	60<A<65	**16-7-3839**	steel	zinc plated	36g

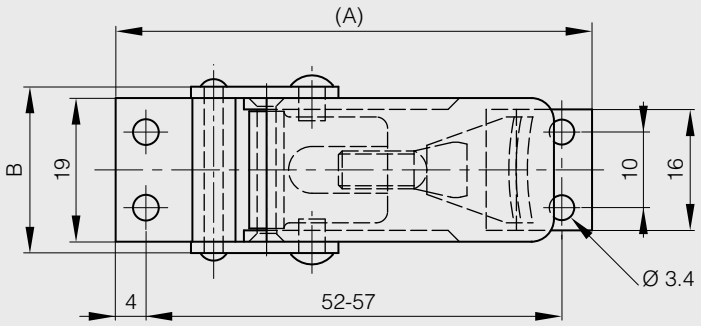

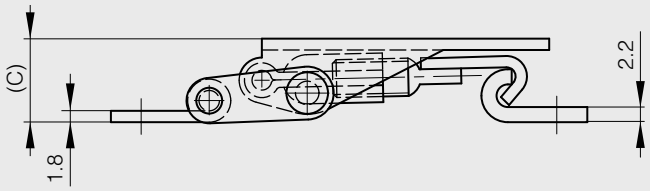

Adjustable toggle latches without strike

This latch is used with strike part numbers 16-7-3939 and 16-7-3940 (see below)
Part number 16-7-3934 has a lockable nut.

A	B	C	part number	material	finish	weight
70.6	28.2	16	**16-7-3932**	steel	zinc plated	50g
70.6	28.2	16	**16-7-3934**	steel	zinc plated	50g
70.6	28.2	16	**16-7-3933**	304 stainless steel	raw	50g

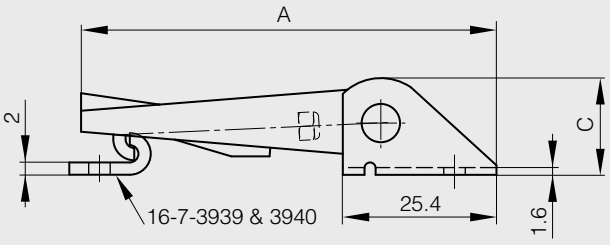

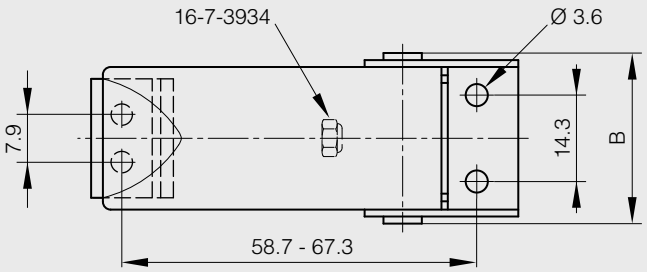

Strike for part numbers 16-7-3932, 16-7-3933 and 16-7-3934

part number	material	finish	weight
16-7-3939	steel	zinc plated	4.5g
16-7-3940	304 stainless steel	raw	4.5g

Adjustable toggle latch with strike

A	B	C	part number	material	finish	weight
88	48.5	26	**16-7-3843**	steel	zinc plated	174g
88	48.5	26	**16-7-3844**	304 stainless steel	raw	174g

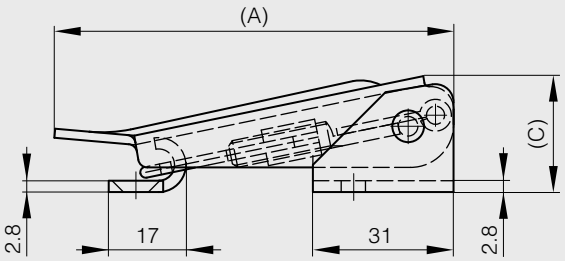

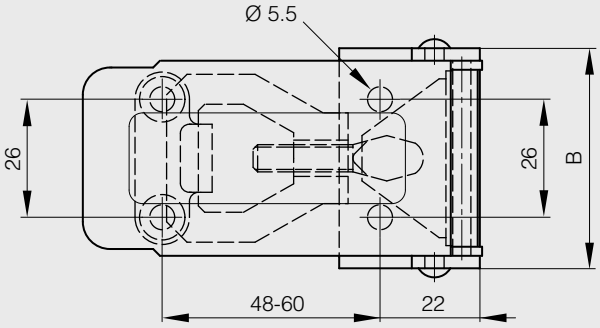

Adjustable toggle latches with strike

A	B	C	C1	C2	D	E	F	G	H	J	note	part number	material	finish	weight
82	28	14	2	2	4	14	5	10	52-59	18	82<A<89	**16-7-4017**	steel	zinc plated	46g
103	34	18	2.5	3	5	17	6.5	10	68-86	17	103<A<121	**16-7-4019**	steel	zinc plated	90g
82	28	14	2	2	4	14	5	10	52-59	18	82<A<89	**16-7-4024**	304 stainless steel	raw	46g
103	34	18	2.5	3	5	17	6.5	10	68-86	17	103<A<121	**16-7-4026**	304 stainless steel	raw	90g

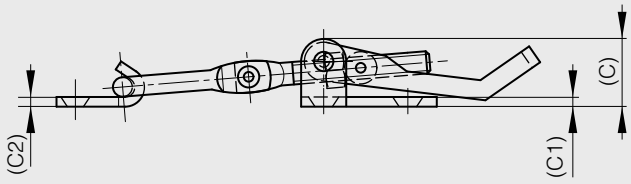

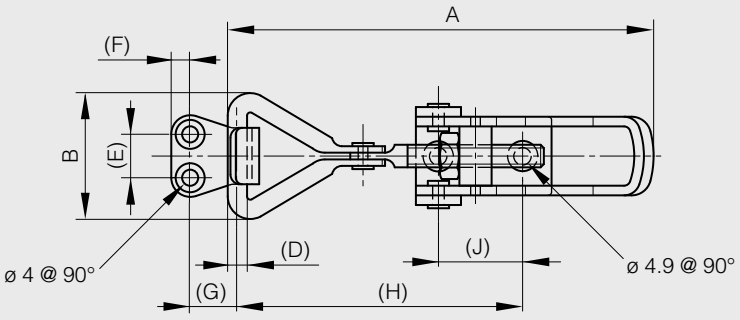

Adjustable toggle latch with strike

METALIKA KAČIN Locking systems
www.metalika-kacin.com

A	B	C	note	part number	material	finish	weight
118	40.5	18	118<A<128	**16-7-4022**	steel	zinc plated	130g
118	40.5	18	118<A<128	**16-7-4029**	304 stainless steel	raw	130g

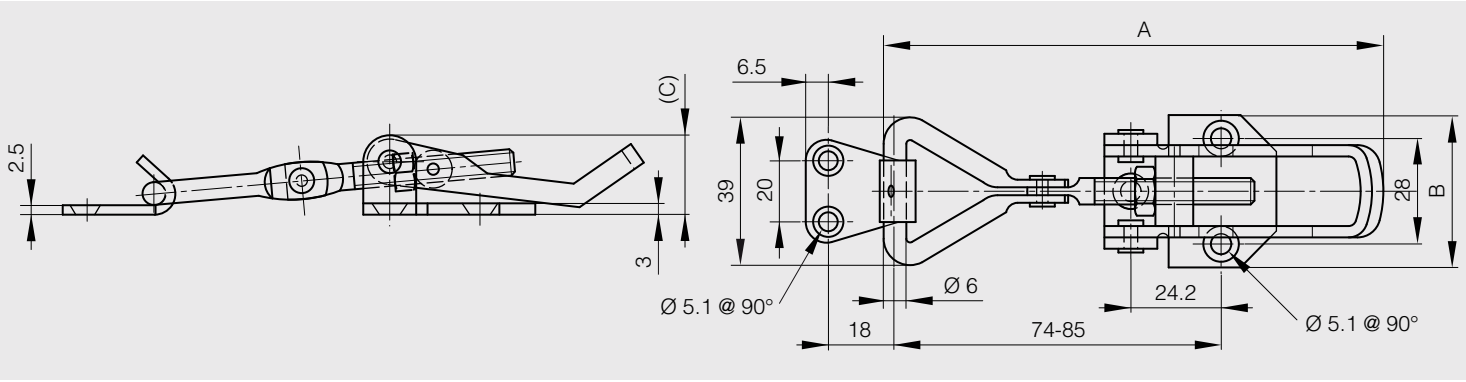

Adjustable toggle latch without strike

Dimension A is adjustable / 119.1mm to 133.6mm.
Aluminium mounting plate.
This latch is used with strike part number 16-7-3944 (see below)

A	B	C	note	part number	material	finish	weight
119.1	76.2	25.9	119.1<A<133.6	**16-7-3941**	steel	zinc plated	150g

Strike for part number 16-7-3941

part number	material	finish	weight
16-7-3944	alu	raw	9g

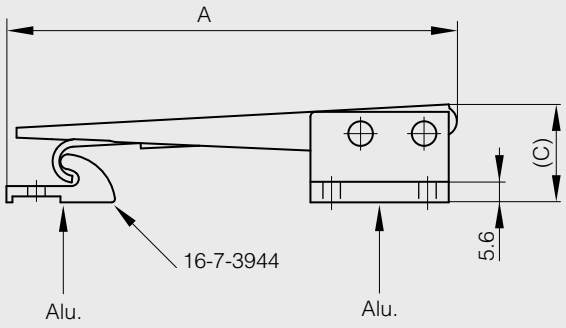

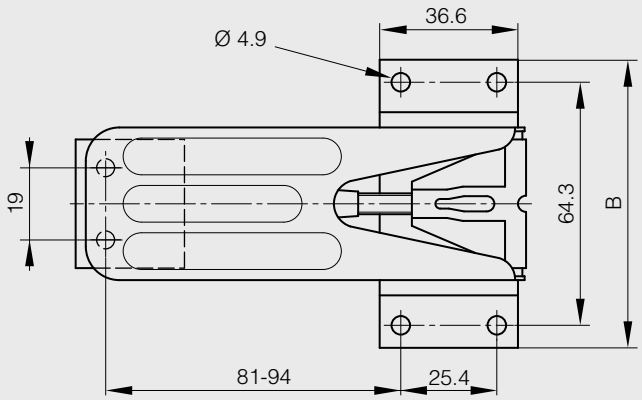

Adjustable toggle latch with strike

METALIKA Locking systems KAÇIN www.metalika-kacin.com

Dimension A is adjustable / 135mm to 150mm.

A	B	C	note	part number	material	finish	weight
135	45.5	23	135<A<150	**16-7-3842**	steel	zinc plated	170g

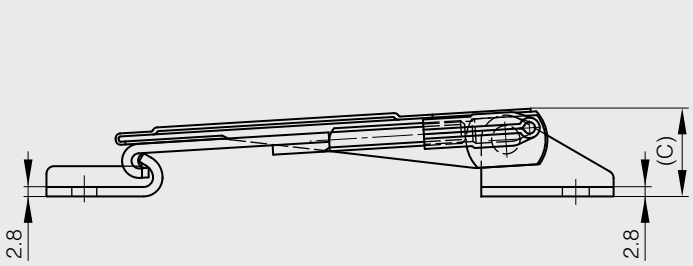

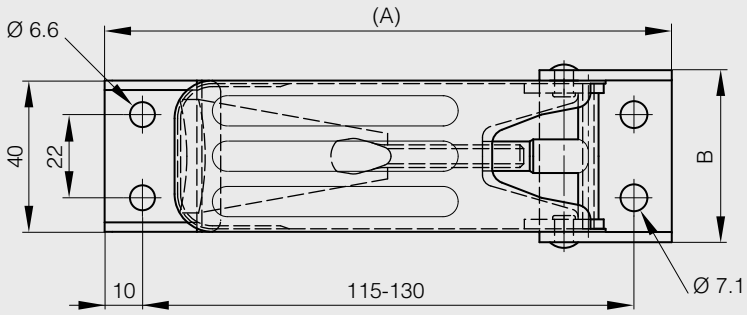

Adjustable toggle latch with strike

Dimension A is adjustable / 138mm to 150mm.

A	B	C	note	part number	material	finish	weight
138	52	18	138<A<150	**16-7-3840**	steel	zinc plated	100g
138	52	18	138<A<150	**16-7-3841**	304 stainless steel	raw	100g

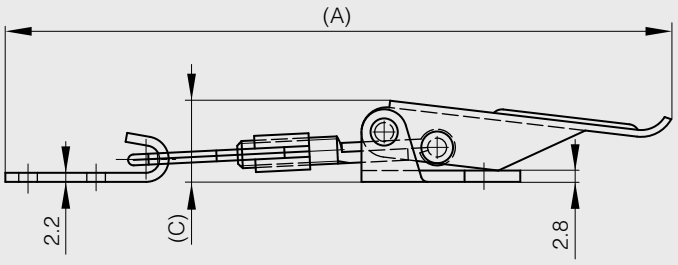

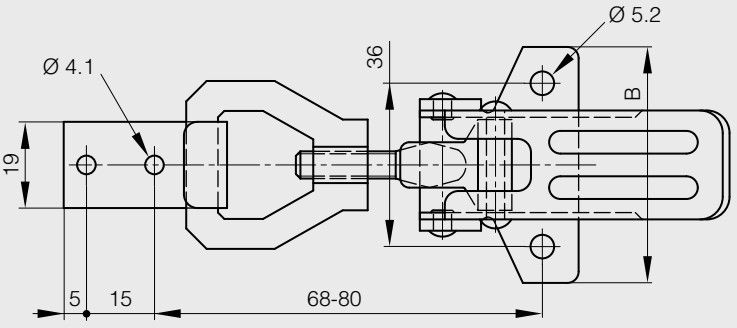

Toggle latches without strike

A	B	C	part number	material	finish	weight
62.5	24.6	14.2	**16-7-3897**	304 stainless steel	raw	27g

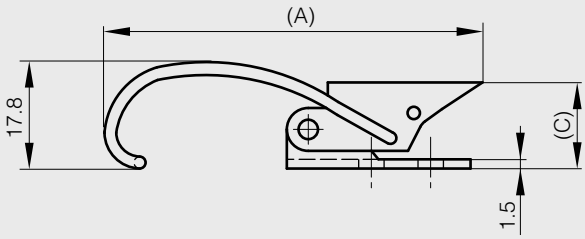

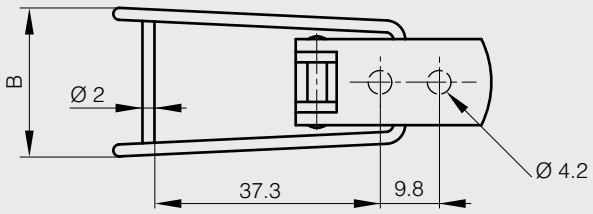

A	B	C	part number	material	finish	weight
62.5	24.4	13.5	**16-7-3900**	304 stainless steel	raw	27g

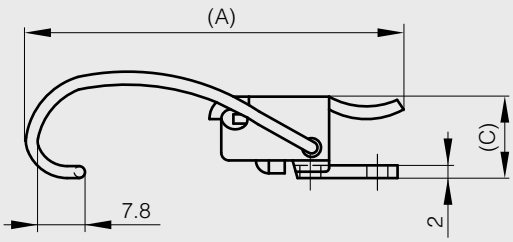

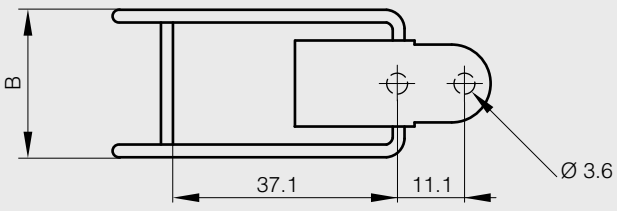

Toggle latches without strike

METALIKA Locking systems KAÇIN www.metalika-kacin.com

A	B	C	part number	material	finish	weight
63.6	22.5	11.8	**16-7-3767**	steel	black cataphoresis	20g

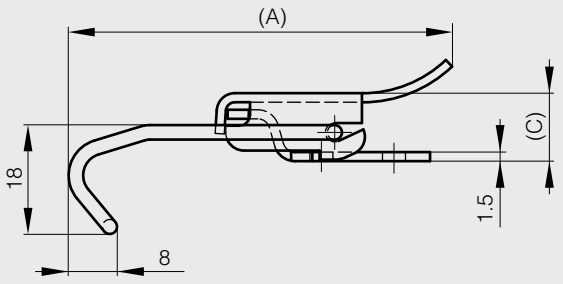

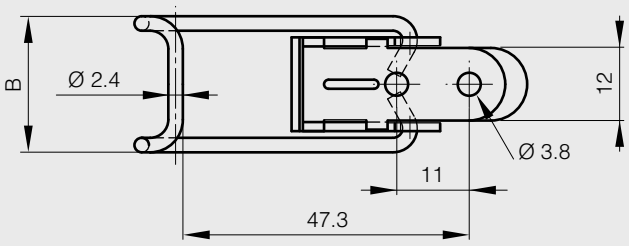

A	B	C	part number	material	finish	weight
64	28.7	14	**16-7-3947**	steel	zinc plated	45g
64	28.7	14	**16-7-3948**	stainless steel	raw	45g

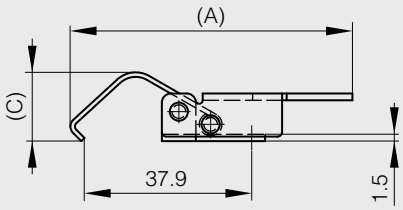

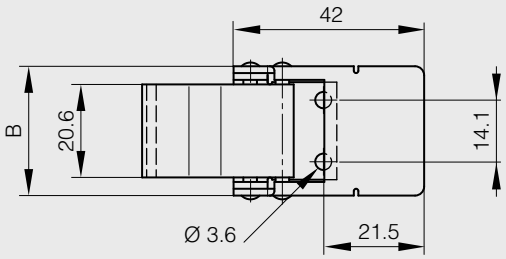

Toggle latches without strike

A	B	C	part number	material	finish	weight
67.6	25.4	13.7	**16-7-3901**	steel	zinc plated	32g
67.6	25.4	13.7	**16-7-3902**	304 stainless steel	raw	32g

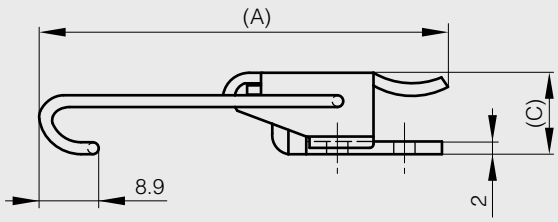

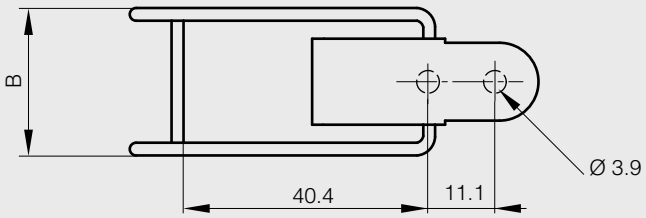

A	B	C	part number	material	finish	weight
93.2	25.4	13.7	**16-7-3903**	304 stainless steel	raw	32g

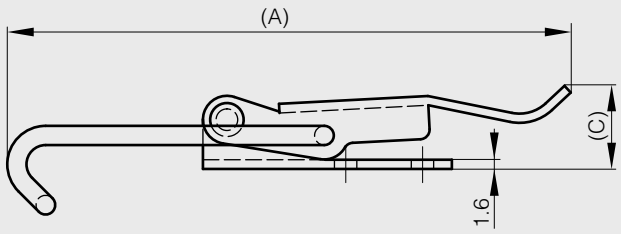

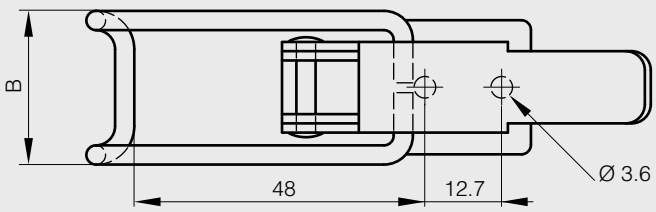

Toggle latch without strike

METALIKA KACIN Locking systems
www.metalika-kacin.com

A	B	C	part number	material	finish	weight
106	47	19.5	**16-7-3768**	steel	black cataphoresis	42g

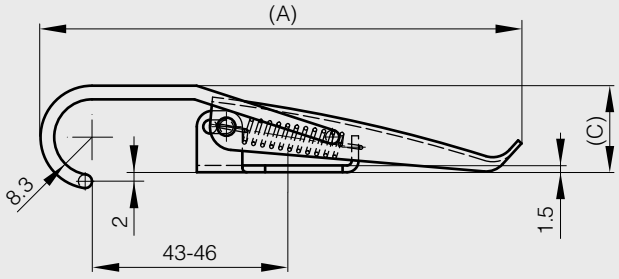

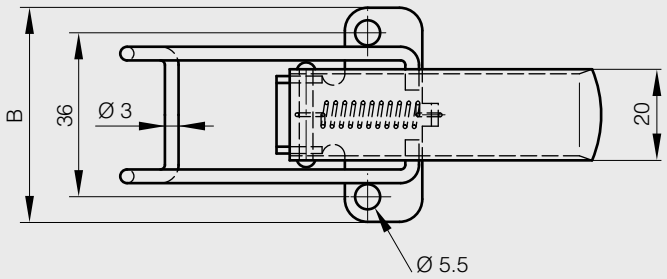

Alternative strike for toggle latches

A	B	part number	material	finish	weight
21.4	22.4	**16-7-3872**	304 stainless steel	raw	9g

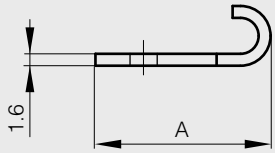

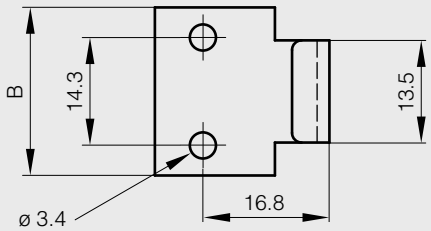

Paddle latches

METALIKA Locking systems KACIN
www.metalika-kacin.com

A	B	note	part number	material	finish	weight
68.5	84	with key	**16-1-4108**	304 stainless steel	raw	184g
68.5	84	without key	**16-1-4107**	304 stainless steel	raw	184g

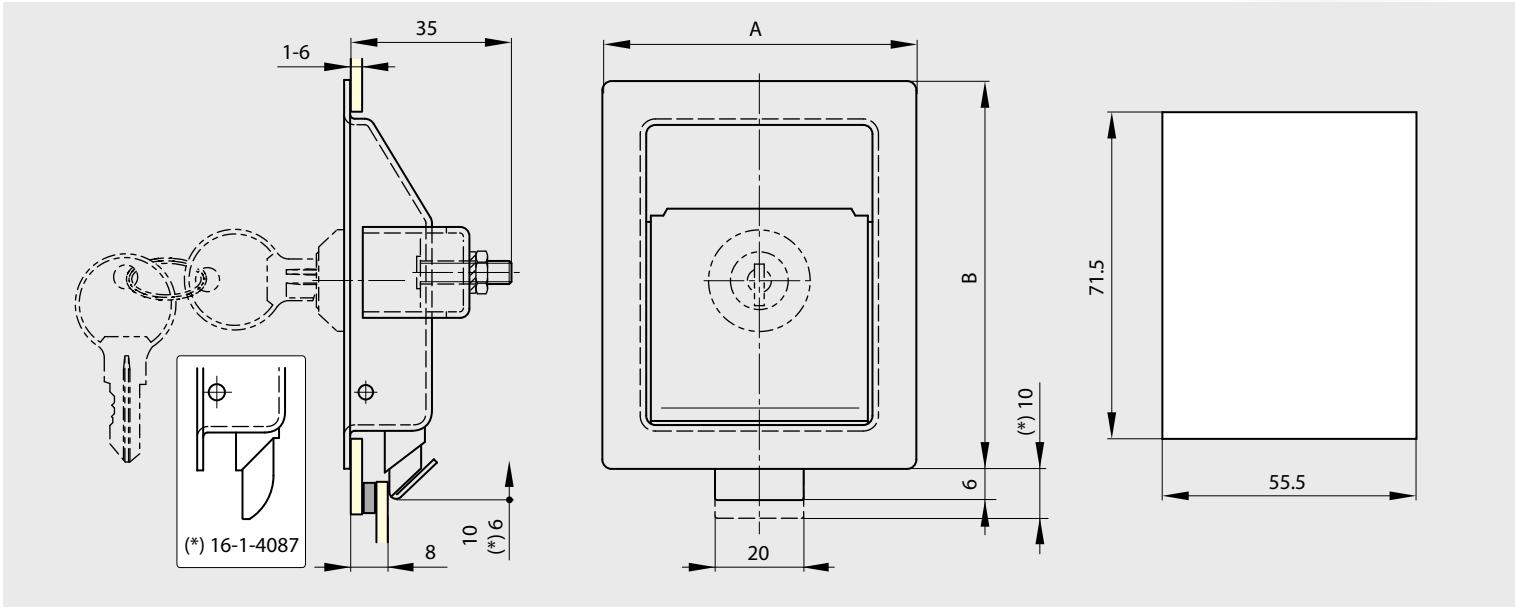

A	B	note	part number	material	finish	weight
41	92	with key	**16-1-4088**	304 stainless steel	brushed	162g

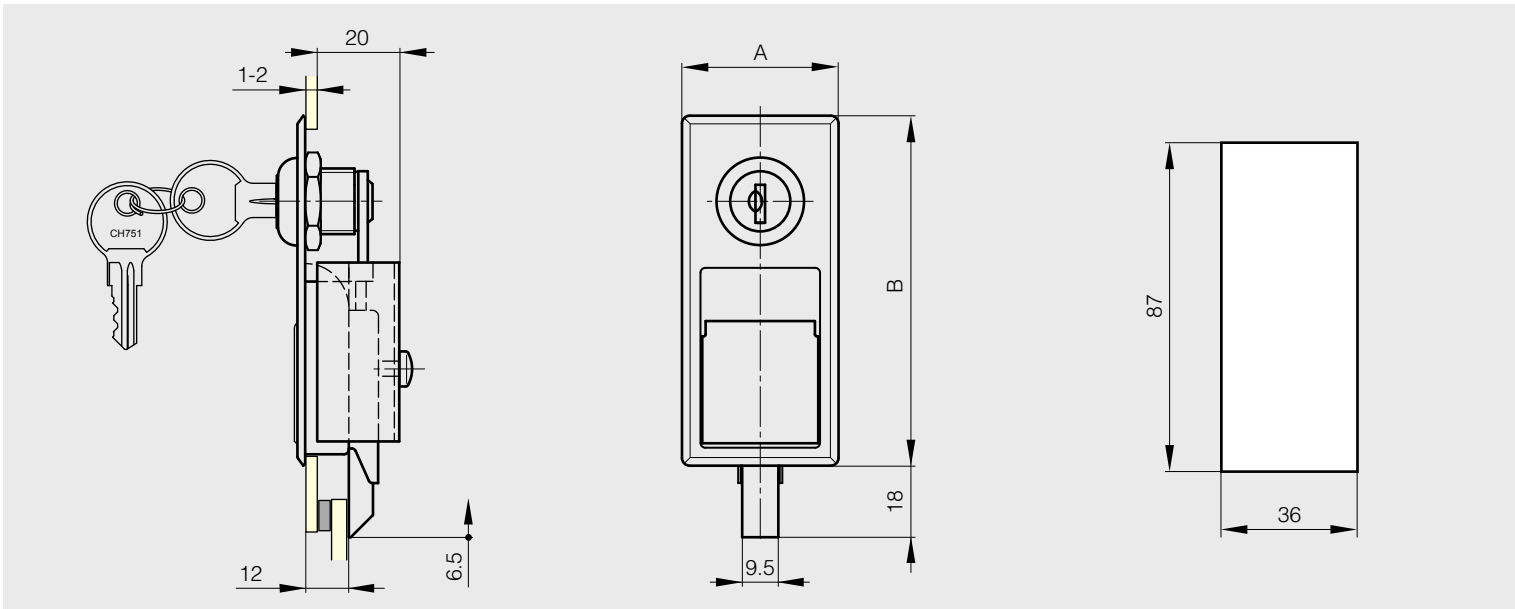

Budget latch

Not handed

A	B	C	W	part number	material	finish	weight
85	17	8.5	90°	**16-1-3972**	304 stainless steel	raw	56g

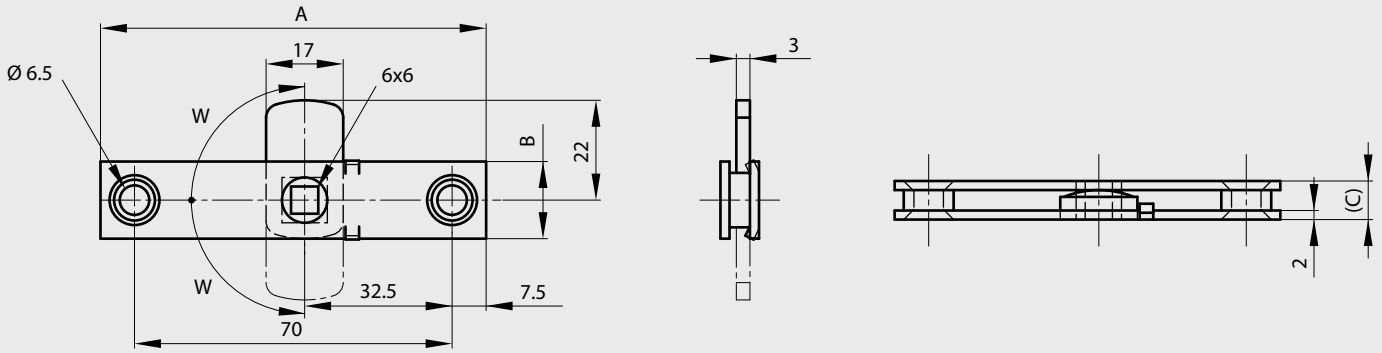

Spring budget latch

Not handed

A	B	C	note	part number	material	finish	weight
85	53.4	8.5	Budget latch (no strike)	**16-1-4031**	304 stainless steel	deburred	69g
85	17	8.5	Strike	**16-1-4032**	304 stainless steel	deburred	48g

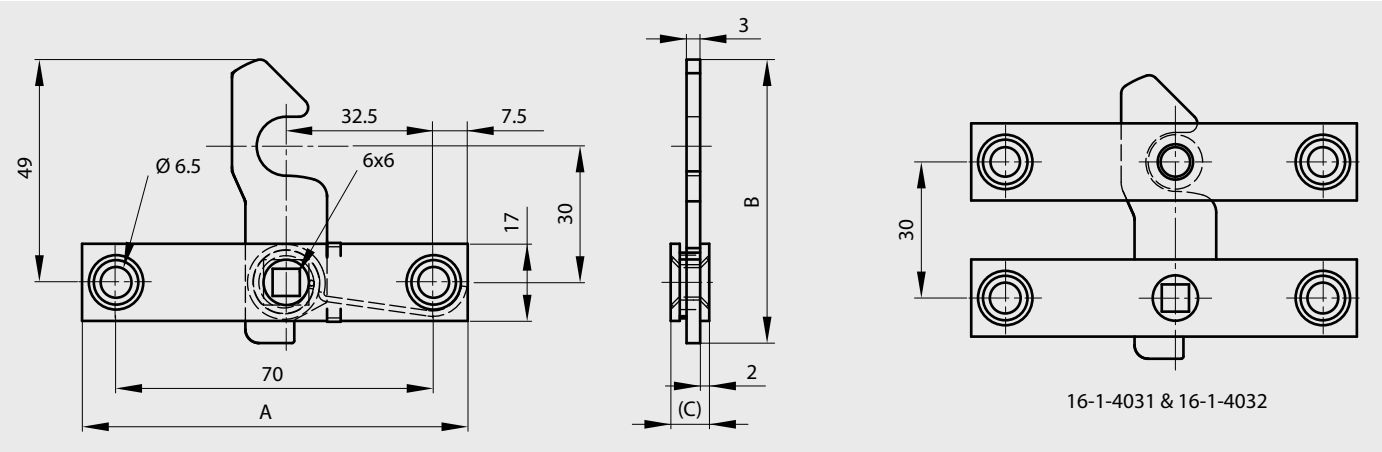

16-1-4031 & 16-1-4032

Budget latch

METALIKA Locking systems KACIN
www.metalika-kacin.com

Not handed
3 indend positions

A	B	C	W	part number	material	finish	weight
80	19	8	90°	**16-1-4086**	304 stainless steel	raw	63g

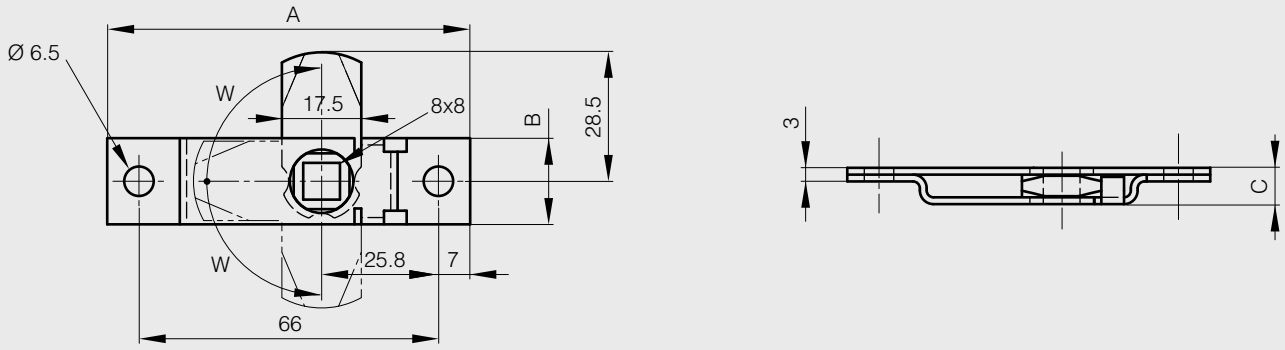

Push barrel bolt

new!

Stainless steel latch with steel shaft and plastic button

A	B	C	part number	material	finish	weight
68	33.5	15	**16-1-9008**	stainless steel	raw	44g

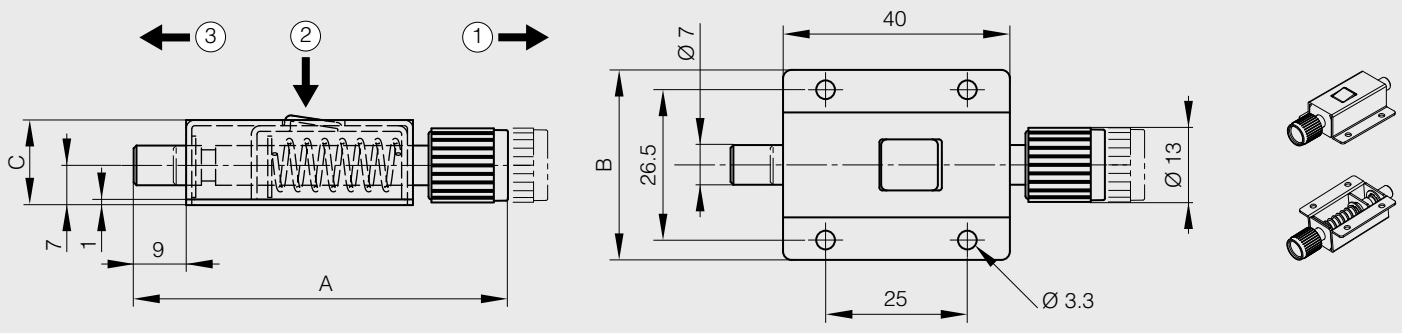

Springloaded bolt

Slam blot - reversible

A	B	C	note	part number	material	finish	weight
62	57	15.8	bolt delivered 'nose-down'	**16-7-3835**	304 stainless steel	raw	185g

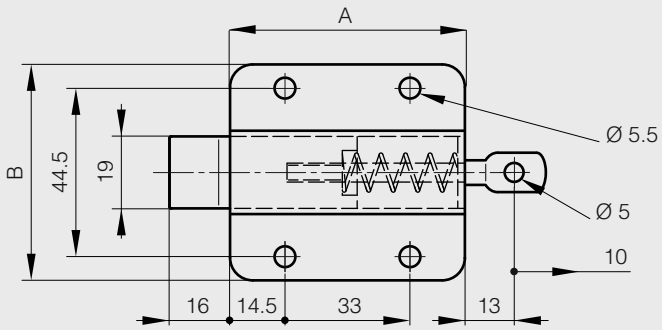

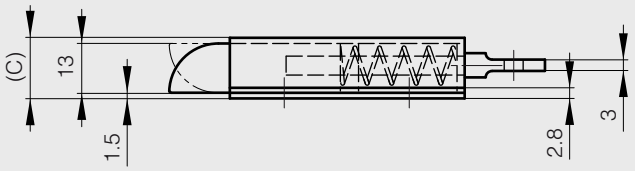

Barrel bolt

Can be fixed in vertical or horizontal position (stop when locked)
Supplied with 2 different strikes (see drawing).

A	B	C	part number	material	finish	weight
50	37	27	**16-7-3863**	304 stainless steel	satin	80g

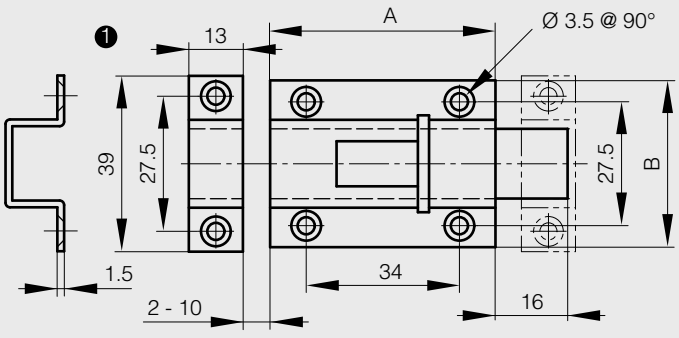

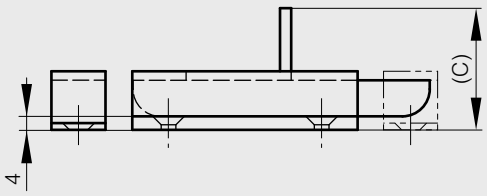

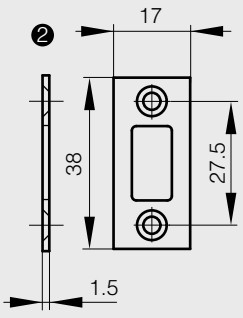

Toggle latches without strike

METALIKA Locking systems KACIN
www.metalika-kacin.com

These latches are used with strike part numbers 16-7-3414, 16-7-3418, 16-7-3529 and 16-7-3531 (see below)

A	B	C	note	part number	material	finish	weight
50	22	12.5	drilled	**16-7-3525**	304 stainless steel	raw	20g
49	22.5	11.8	undrilled	**16-7-3527**	304 stainless steel	raw	20g

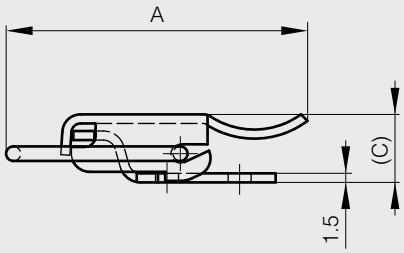

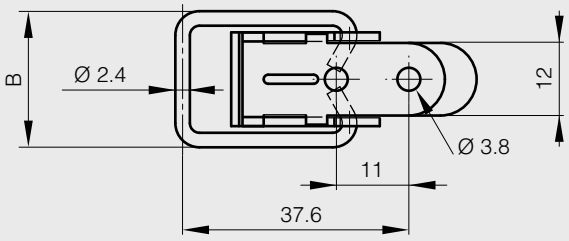

Strikes for part numbers 16-7-3525 and 16-7-3527

A	B	C	D	E	note	part number	material	finish	weight
12.8	24	1.5	14	5	drilled	**16-7-3529**	304 stainless steel	raw	3.5g
12.8	24	1.5			undrilled	**16-7-3531**	304 stainless steel	raw	3.5g

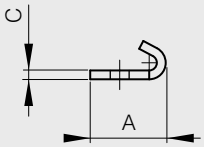

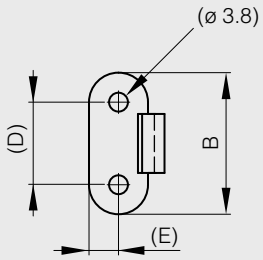

Toggle latch with strike

A	B	C	part number	material	finish	weight
52	41	13.5	**16-7-3846**	304 stainless steel	raw	23g

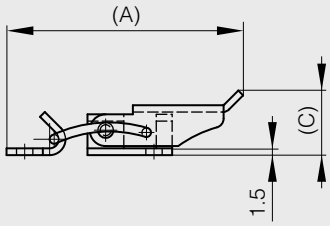

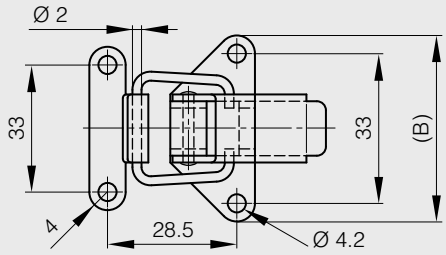

Toggle latch without strike

This latch is used with strike part number 16-7-3874 (see below)

A	B	C	part number	material	finish	weight
58.1	23.4	12.7	**16-7-3876**	304 stainless steel	raw	32g

Strike for part number 16-7-3876

part number	material	finish	weight
16-7-3874	304 stainless steel	raw	3.5g

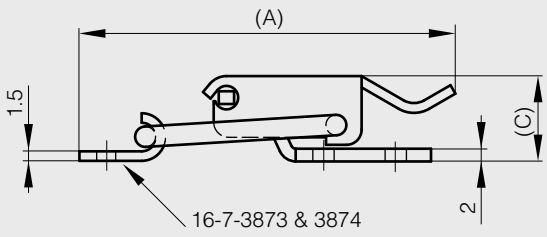

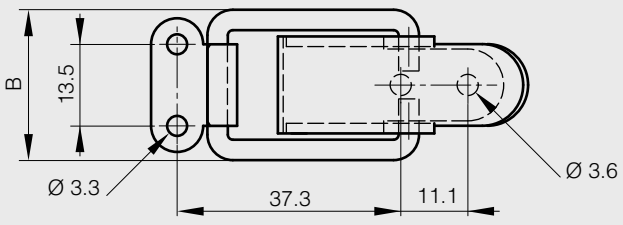

Toggle latches without strike

METALIKA Locking systems KAÇIN www.metalika-kacin.com

These latches are used with strike part numbers 16-7-3530 and 16-7-3532 (see below).
A padlockable option is available for part number 16-7-3724.

A	B	C	note	part number	material	finish	weight
80.2	32	14.5	drilled	**16-7-3526**	304 stainless steel	raw	53.5g
80.2	32	14.5	undrilled	**16-7-3528**	304 stainless steel	raw	53.5g

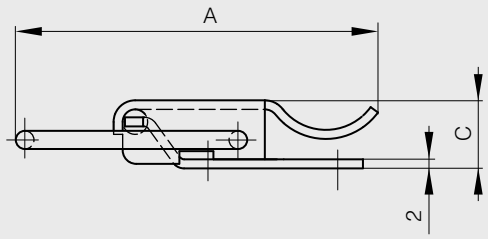

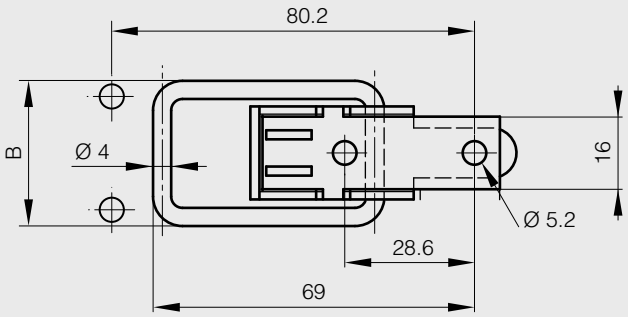

Strikes for part number 16-7-3526 and 16-7-3528

A	B	C	D	E	note	part number	material	finish	weight
20	26.2	2	15	5.1	drilled	**16-7-3530**	304 stainless steel	raw	9g
20	26.2	2			undrilled	**16-7-3532**	304 stainless steel	raw	9g

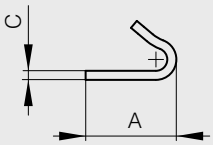

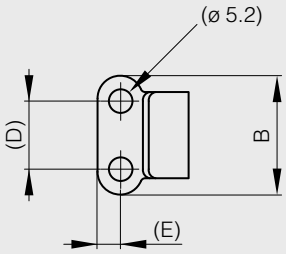

Toggle latch without strike

Punched holes
This latch is used with strike part number 16-7-3601 (see below)

A	B	C	part number	material	finish	weight
88.5	40	19.5	**16-7-3829**	304 stainless steel	raw	106g

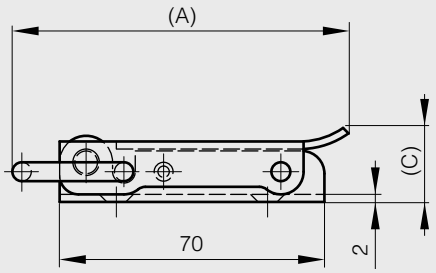

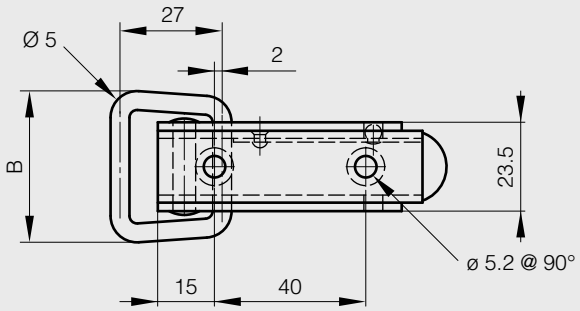

Strike for part number 16-7-3829

A	B	part number	material	finish	weight
28	25	**16-7-3601**	304 stainless steel	raw	24g

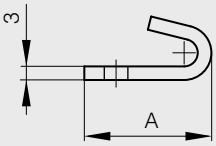

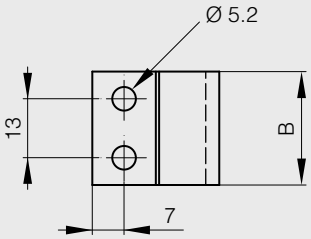

Other strike available for part number 16-7-3829

Drilled and countersunk for 4.5 mm diameter screws

A	B	part number	material	finish	weight
85	25	**16-7-3828**	304 stainless steel	raw	57g

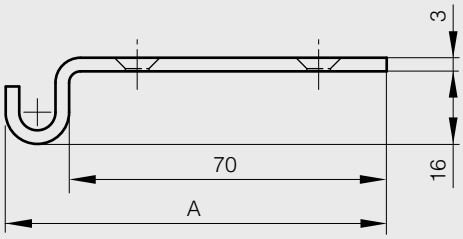

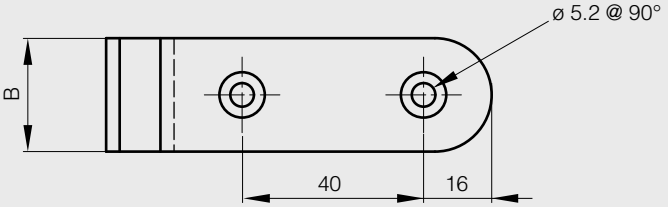

Toggle latches (consistent tension)

METALIKA Locking systems KAÇIN www.metalika-kacin.com

This latch is used with strike part number 16-7-3874 (see below)

A	B	C	part number	material	finish	weight
58.6	20.6	12.7	**16-7-3891**	304 stainless steel	raw	27g

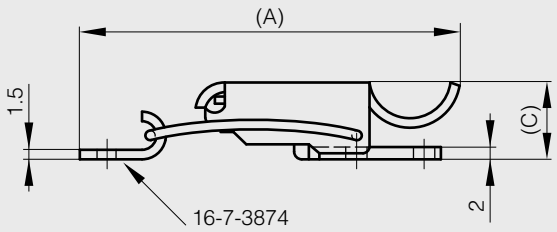

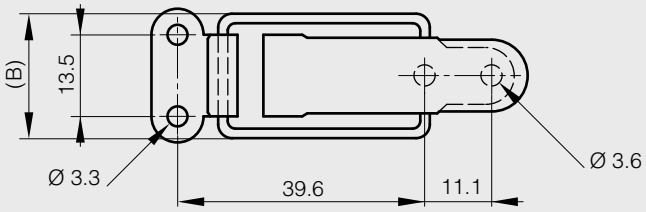

This latch is used with strike part number 16-7-3874 (see below)

A	B	C	part number	material	finish	weight
61.7	27	12.7	**16-7-3888**	304 stainless steel	raw	27g

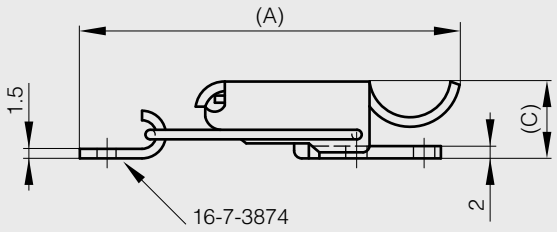

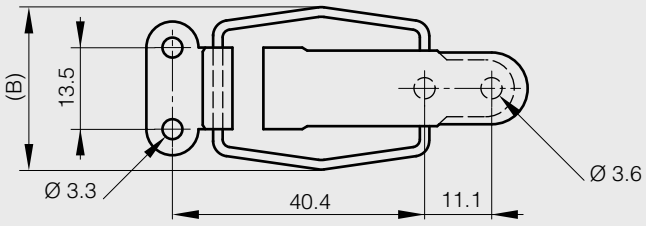

Strike for part numbers 16-7-3888 and 16-7-3891

part number	material	finish	weight
16-7-3874	304 stainless steel	raw	3.5g

Spring loaded toggle latch without strike

METALIKA KACIN Locking systems www.metalika-kacin.com

This latch is used with strike part number 16-7-3907 (see below)

A	B	C	part number	material	finish	weight
35.8	12.3	7.9	**16-7-3906**	304 stainless steel	raw	9g

Strike for part number 16-7-3906

A	B	part number	material	finish	weight
13.5	9.4	**16-7-3907**	304 stainless steel	raw	4.5g

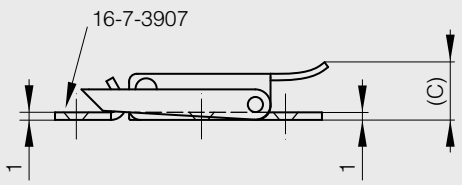

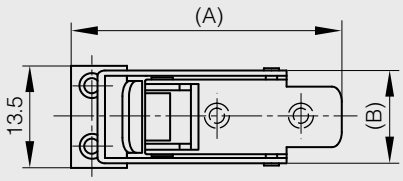

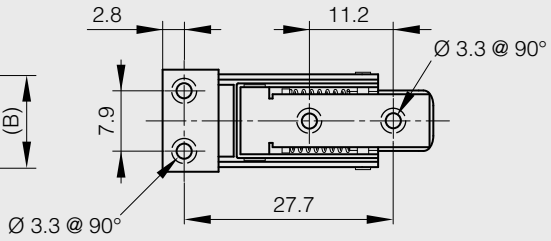

Spring loaded toggle latches without strike

These latches are used with strike part number 16-7-3916 (see below)

A	B	C	note	part number	material	finish	weight
70.8	28.7	10.2		**16-7-3911**	304 stainless steel	raw	50g
70.8	28.7	10.2	with seal wire hole	**16-7-3920**	304 stainless steel	raw	50g

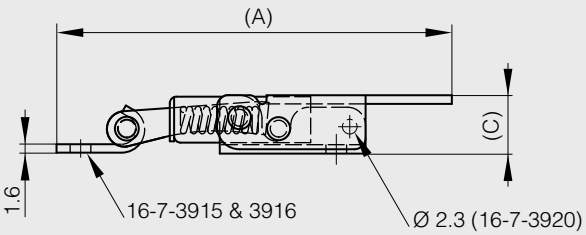

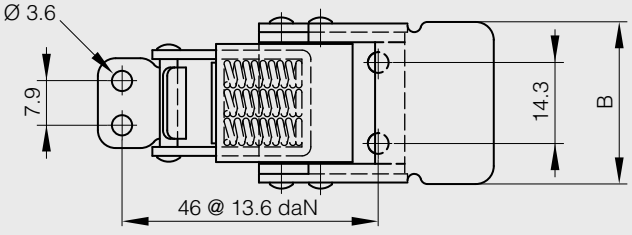

Spring loaded toggle latch without strike

METALIKA Locking systems KAČIN www.metalika-kacin.com

This latch is used with strike part number 16-7-3916 (see below).
A padlockable option is available for part number 16-7-3917.
The push button prevents accidental opening.

A	B	C	note	part number	material	finish	weight
70.9	28.7	14.7	with push button to open / no seal wire hole	**16-7-3918**	304 stainless steel	raw	50g

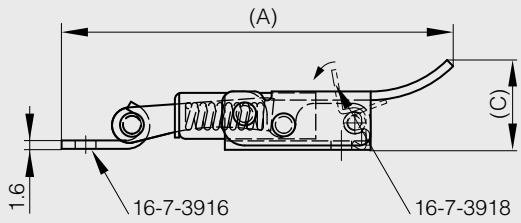

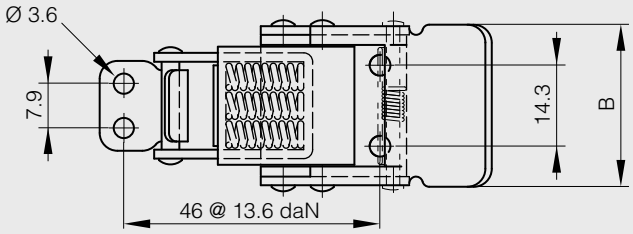

Strikes for part numbers 16-7-3910, 16-7-3911, 16-7-3918 and 16-7-3920

part number	material	finish	weight
16-7-3916	304 stainless steel	raw	4.5g

Spring loaded toggle latch without strikes

METALIKA KACIN Locking systems www.metalika-kacin.com

This latch is used with strike part numbers 16-7-3739 and 16-7-3742 (see below).
A padlockable option is available for part number 16-7-3760.

A	B	C	part number	material	finish	weight
52	34.5	11.8	**16-7-3736**	304 stainless steel	raw	27g

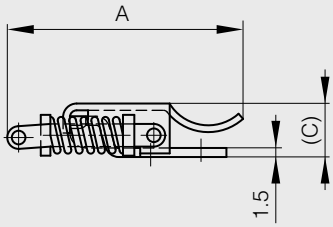

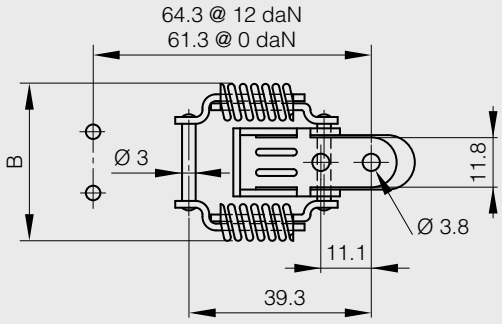

Strikes for part number 16-7-3736

A	B	note	part number	material	finish	weight
28.5	20.5	undrilled	**16-7-3739**	304 stainless steel	raw	3.5g
28.5	20.5	drilled	**16-7-3742**	304 stainless steel	raw	3.5g

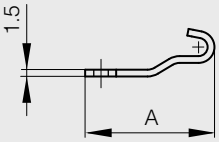

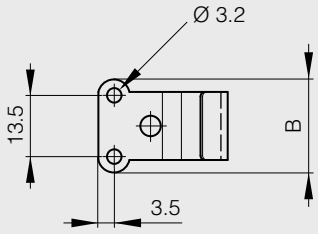

Spring loaded toggle latches without strikes

METALIKA Locking systems KAÇIN www.metalika-kacin.com

Dimension A (74mm) without tension. Dimension A can be extended up to 4mm putting the latch under tension.
The latches are used with strike part numbers 16-7-3751 and 16-7-3754 (see below)
Padlockable options are available for part numbers 16-7-3765 and 16-7-3766.

A	B	C	note	part number	material	finish	weight
74	47	15	undrilled	**16-7-3745**	304 stainless steel	raw	70g
74	47	15	drilled	**16-7-3748**	304 stainless steel	raw	70g

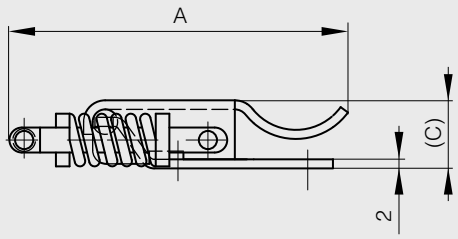

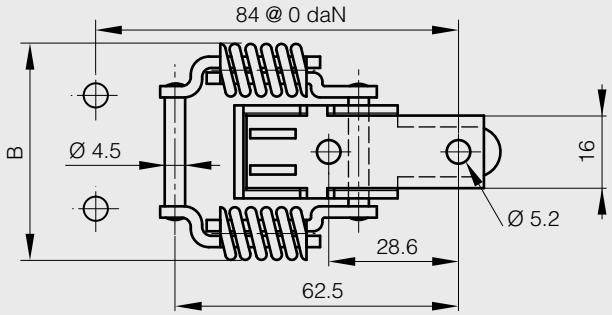

Strikes for part numbers 16-7-3745 and 16-7-3748

A	B	note	part number	material	finish	weight
36	40	undrilled	**16-7-3751**	304 stainless steel	raw	20g
36	40	drilled	**16-7-3754**	304 stainless steel	raw	20g

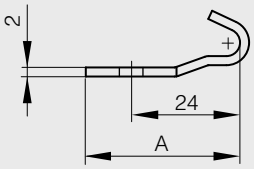

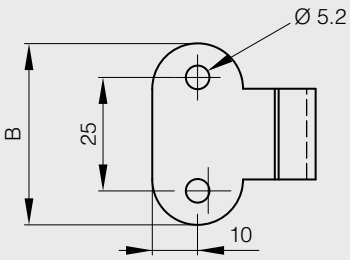

Padlockable toggle latches

METALIKA KACIN Locking systems www.metalika-kacin.com

This latch is used with strike part numbers 16-7-3727 and 16-7-3730 (see below)

A	B	C	note	part number	material	finish	weight
80.2	32	23.5	drilled	**16-7-3724**	304 stainless steel	raw	55g

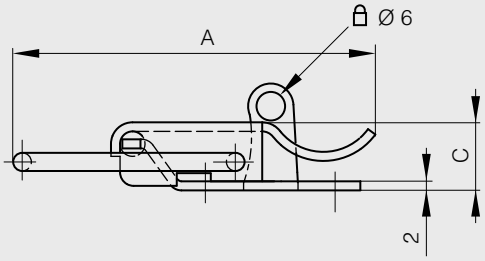

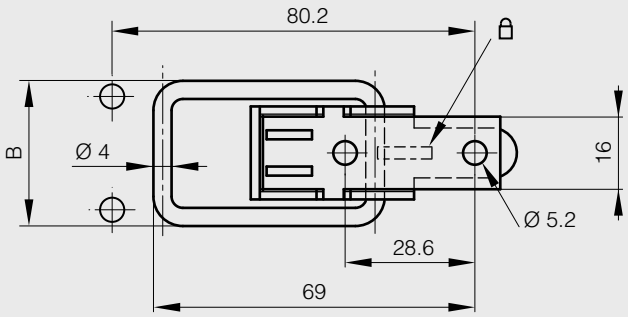

Strikes for part number 16-7-3724

A	B	note	part number	material	finish	weight
27.4	26	undrilled	**16-7-3727**	304 stainless steel	raw	10g
27.4	26	drilled	**16-7-3730**	304 stainless steel	raw	10g

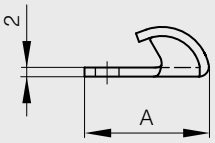

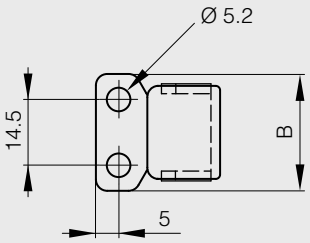

Padlockable toggle latch

METALIKA Locking systems KACIN www.metalika-kacin.com

This latch is used with strike part number 16-7-3885 (see below)

A	B	C	part number	material	finish	weight
97.5	33	23.1	**16-7-3884**	304 stainless steel	raw	68g

Strike for part number 16-7-3884

part number	material	finish	weight
16-7-3885	304 stainless steel	raw	9g

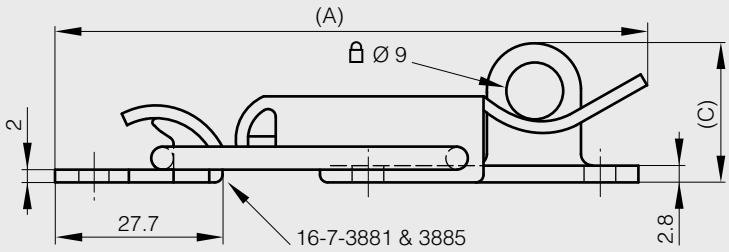

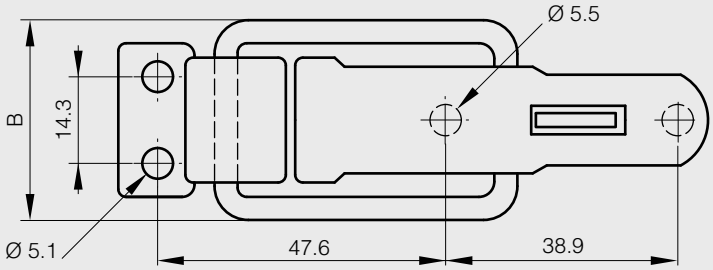

Spring loaded and padlockable toggle latch

METALIKA KACIN Locking systems www.metalika-kacin.com

Dimension A (52mm) without tension. Dimension A can be extended up to 3mm putting the latch under tension.
This latch is used with strike part numbers 16-7-3739 and 16-7-3742 (see below).

A	B	C	part number	material	finish	weight
52	34.5	19.25	**16-7-3760**	304 stainless steel	raw	32g

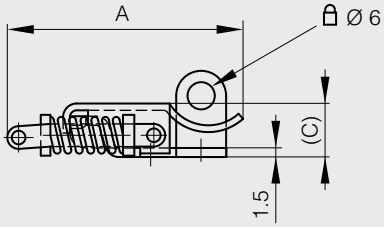

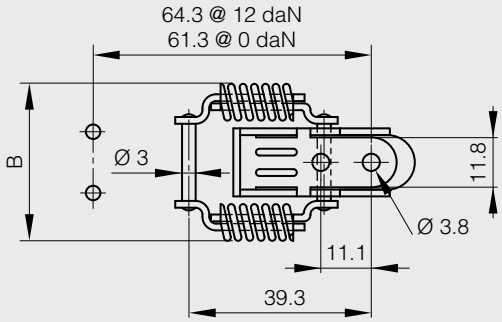

Strikes for part number 16-7-3760

A	B	note	part number	material	finish	weight
28.5	20.5	undrilled	**16-7-3739**	304 stainless steel	raw	3.5g
28.5	20.5	drilled	**16-7-3742**	304 stainless steel	raw	3.5g

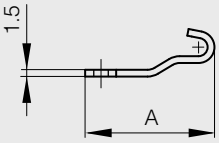

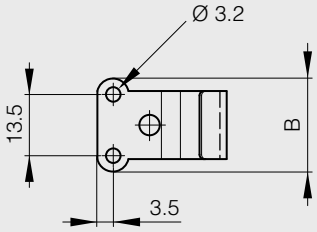

Spring loaded and padlockable toggle latch

METALIKA Locking systems KACIN www.metalika-kacin.com

Dimension A (74mm) without tension. Dimension A can be extended up to 4mm putting the latch under tension.
This latch is used with strike part numbers 16-7-3751 and 16-7-3754 (see below).

A	B	C	part number	material	finish	weight
74	47	18.5	**16-7-3766**	304 stainless steel	raw	75g

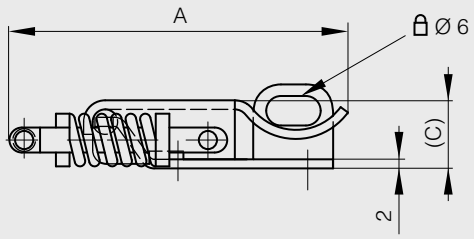

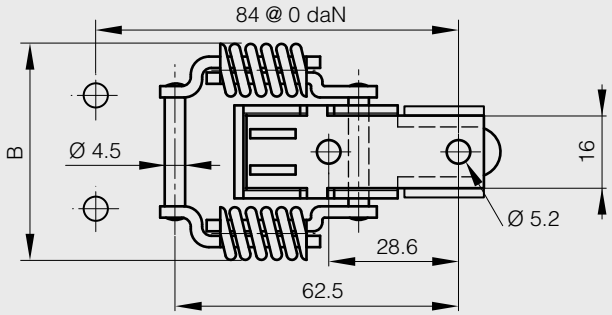

Strikes for part number 16-7-3766

A	B	note	part number	material	finish	weight
36	40	undrilled	**16-7-3751**	304 stainless steel	raw	20g
36	40	drilled	**16-7-3754**	304 stainless steel	raw	20g

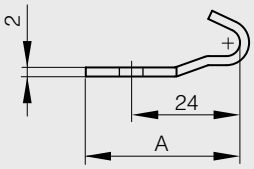

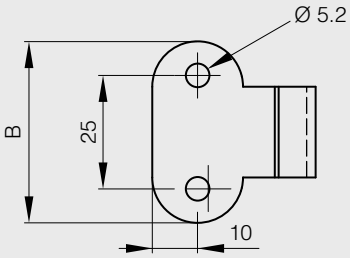

Spring loaded and padlockable toggle latch

METALIKA Locking systems KACIN www.metalika-kacin.com

This latch is used with strike part number 16-7-3916 (see below)

A	B	C	part number	material	finish	weight
70.9	28.7	23.1	**16-7-3917**	304 stainless steel	raw	50g

Strike for part number 16-7-3917

part number	material	finish	weight
16-7-3916	304 stainless steel	raw	4.5g

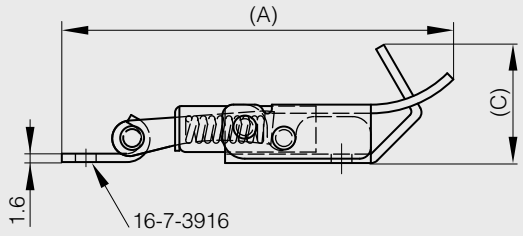

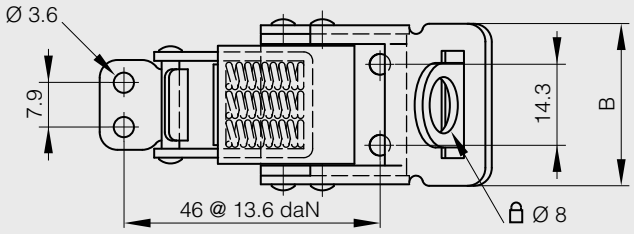

Adjustable toggle latch - padlockable

METALIKA Locking systems KAÇIN www.metalika-kacin.com

This latch is used with strike part number 16-7-3940 (see below)

A	B	C	part number	material	finish	weight
70.6	28.2	16	**16-7-3938**	304 stainless steel	raw	50g

Strike for part number 16-7-3938

part number	material	finish	weight
16-7-3940	304 stainless steel	raw	4.5g

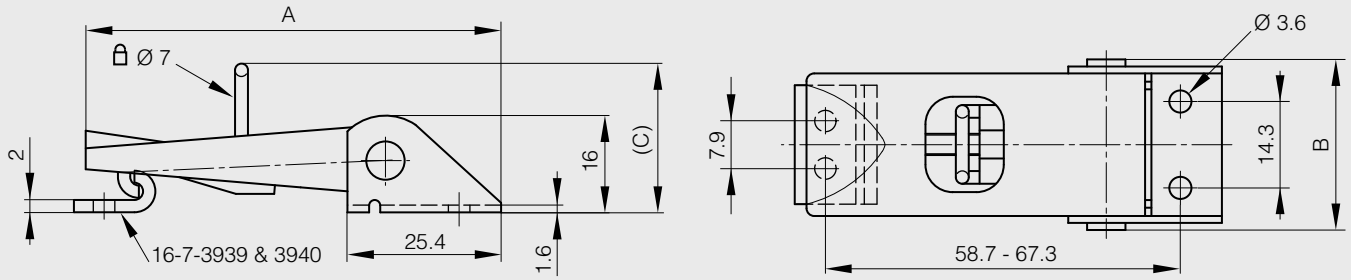

Adjustable toggle latches with strike - padlockable

METALIKA KACIN Locking systems www.metalika-kacin.com

A	B	C	C1	C2	D	E	F	G	H	J	K	L	note	part number	material	finish	weight
82	27	19	2	2	4	14	5	10	62-	22	11	14	82<A<92	**16-7-4025**	304 stainless steel	raw	48g
109	34	18	2.5	3	5	17	6.5	10	109-	27	16	18	109<A<120	**16-7-4027**	304 stainless steel	raw	102g
117	39	22	3	2.5	6	20	6.5	18	117-	33	15	20	117<A<128	**16-7-4028**	304 stainless steel	raw	124g

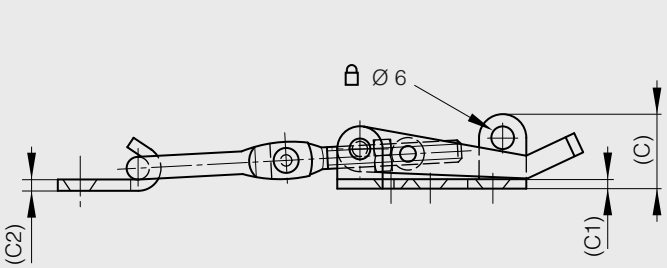

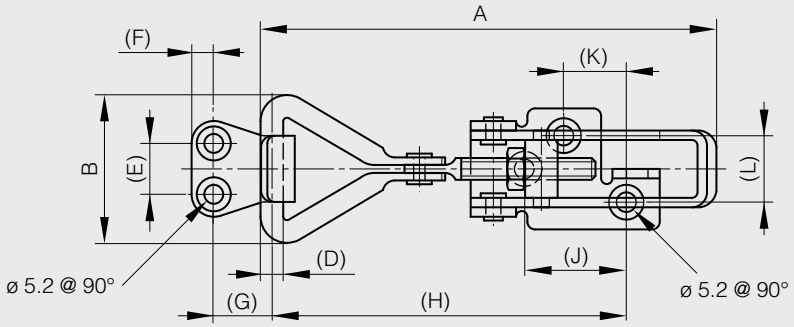

A	B	C	note	part number	material	finish	weight
174	50	27	174<A<186	**16-7-4030**	304 stainless steel	raw	236g

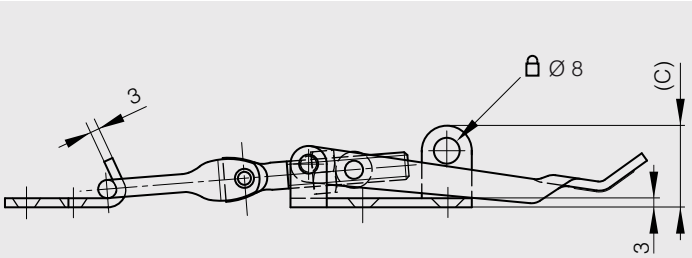

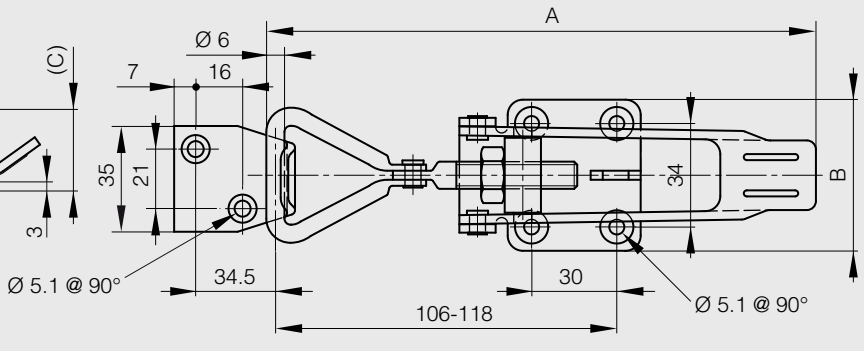

Adjustable toggle latch without strike

METALIKA Locking systems KAÇIN www.metalika-kacin.com

This latch is used with strike part number 16-7-3940 (see below)
Part number 16-7-3934 has a lockable nut.

A	B	C	part number	material	finish	weight
70.6	28.2	16	**16-7-3933**	304 stainless steel	raw	50g

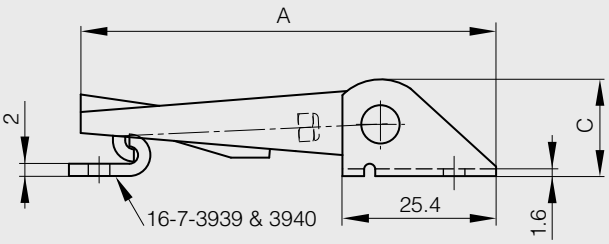

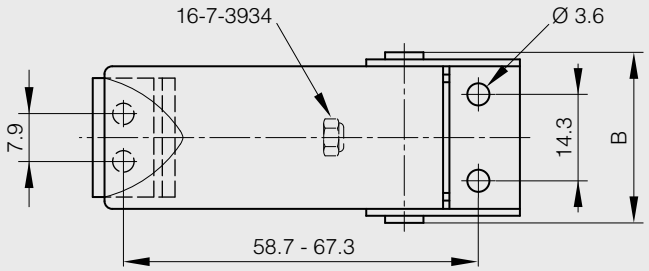

Strike for part number 16-7-3933

part number	material	finish	weight
16-7-3940	304 stainless steel	raw	4.5g

Adjustable toggle latch with strike

A	B	C	part number	material	finish	weight
88	48.5	26	**16-7-3844**	304 stainless steel	raw	174g

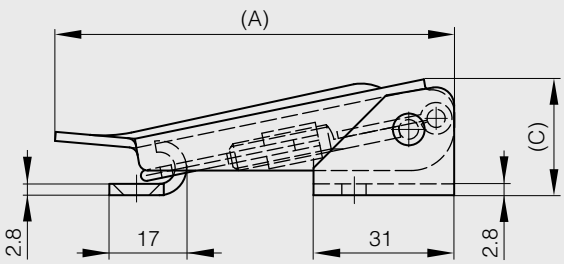

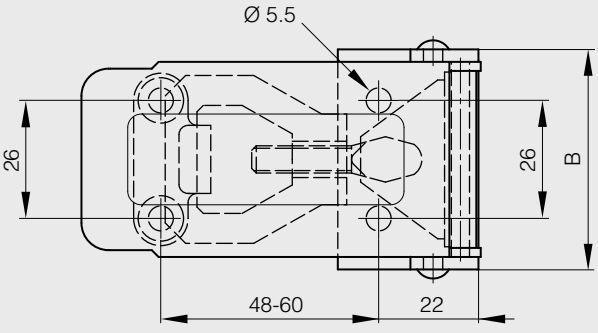

Adjustable toggle latches with strike

METALIKA Locking systems KACIN
www.metalika-kacin.com

A	B	C	C1	C2	D	E	F	G	H	J	note	part number	material	finish	weight
82	28	14	2	2	4	14	5	10	52-59	18	82<A<89	**16-7-4024**	304 stainless steel	raw	46g
103	34	18	2.5	3	5	17	6.5	10	68-86	17	103<A<121	**16-7-4026**	304 stainless steel	raw	90g

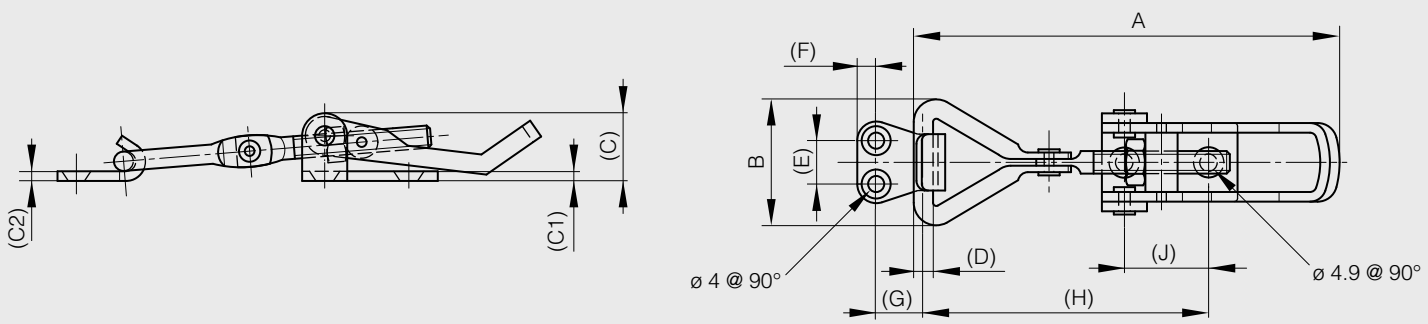

Dimension A is adjustable / 118mm to 128mm.

A	B	C	note	part number	material	finish	weight
118	40.5	18	118<A<128	**16-7-4029**	304 stainless steel	raw	130g

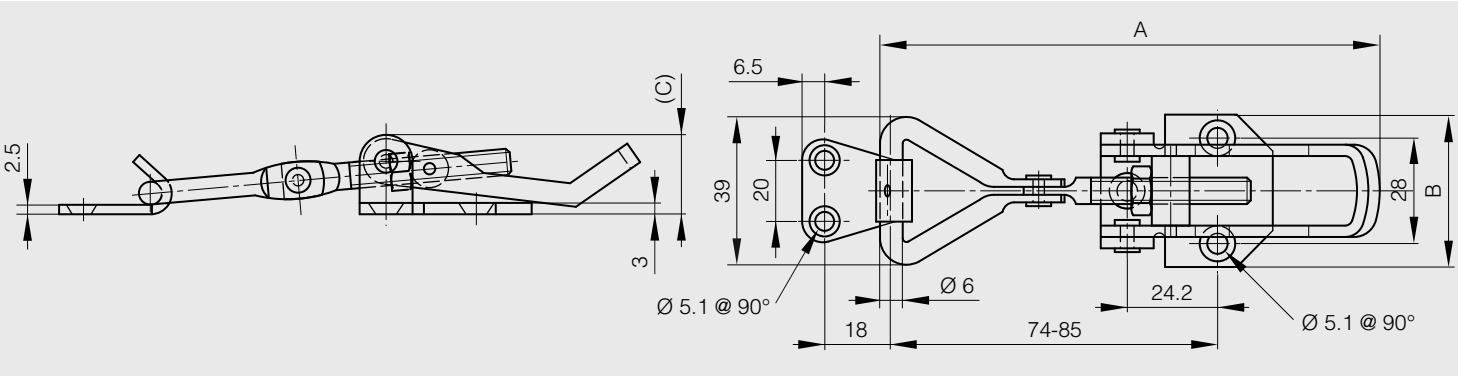

Adjustable toggle latch with strike

METALIKA Locking systems KACIN
www.metalika-kacin.com

Dimension A is adjustable / 138mm to 150mm.

A	B	C	note	part number	material	finish	weight
138	52	18	138<A<150	**16-7-3841**	304 stainless steel	raw	100g

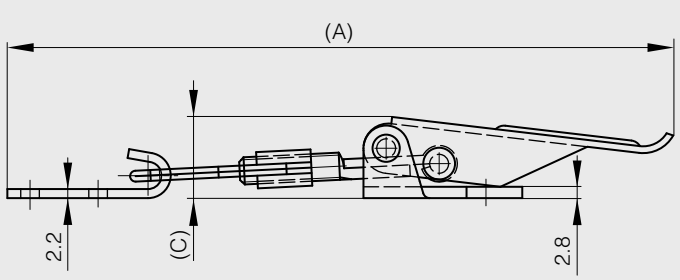

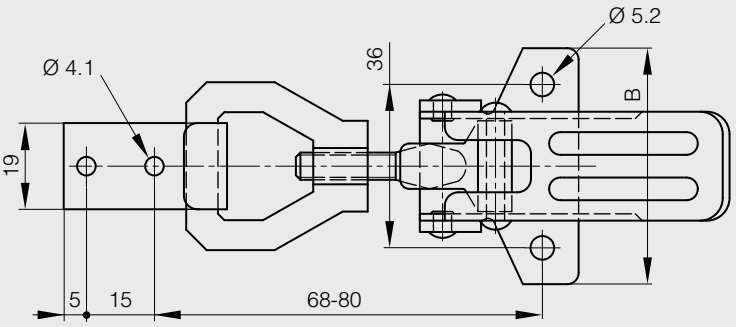

Toggle latches without strike

METALIKA Locking systems KACIN
www.metalika-kacin.com

A	B	C	part number	material	finish	weight
62.5	24.6	14.2	**16-7-3897**	304 stainless steel	raw	27g

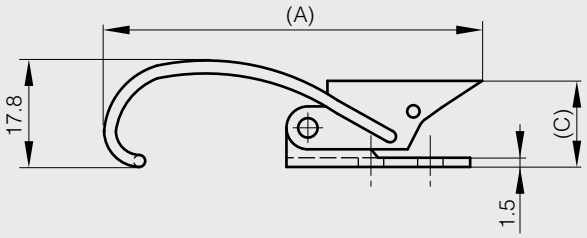

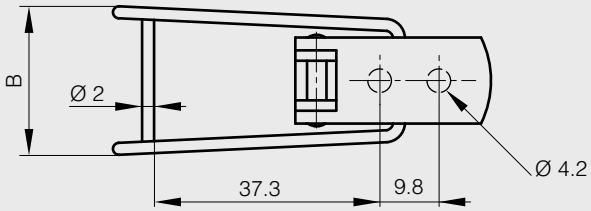

A	B	C	part number	material	finish	weight
62.5	24.4	13.5	**16-7-3900**	304 stainless steel	raw	27g

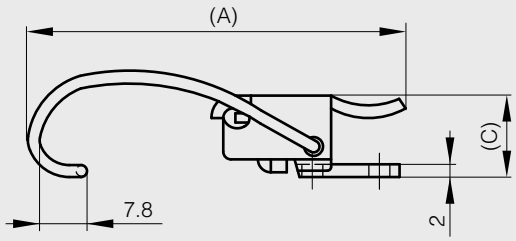

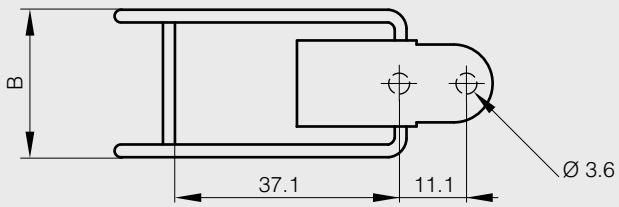

A	B	C	part number	material	finish	weight
64	28.7	14	**16-7-3948**	stainless steel	raw	45g

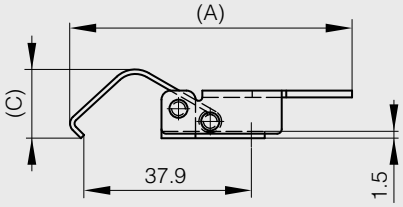

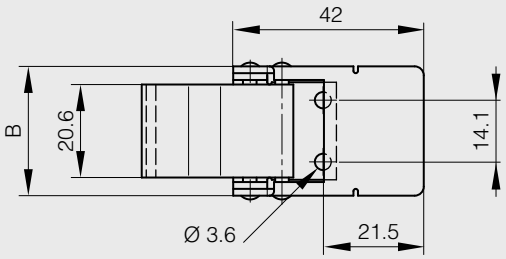

Toggle latches without strike

METALIKA Locking systems KAÇIN
www.metalika-kacin.com

A	B	C	part number	material	finish	weight
67.6	25.4	13.7	**16-7-3902**	304 stainless steel	raw	32g

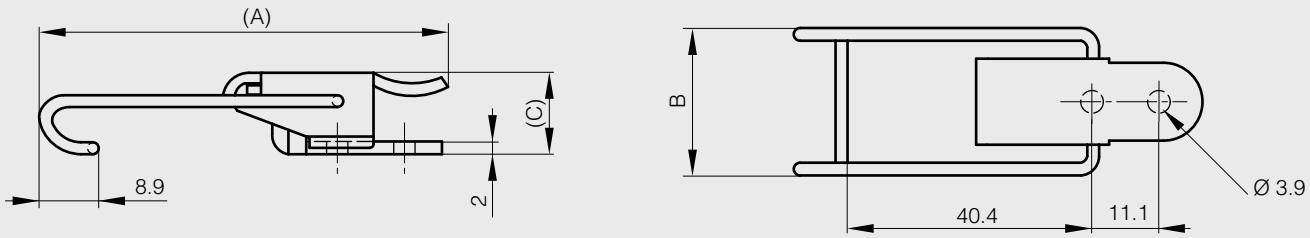

A	B	C	part number	material	finish	weight
93.2	25.4	13.7	**16-7-3903**	304 stainless steel	raw	32g

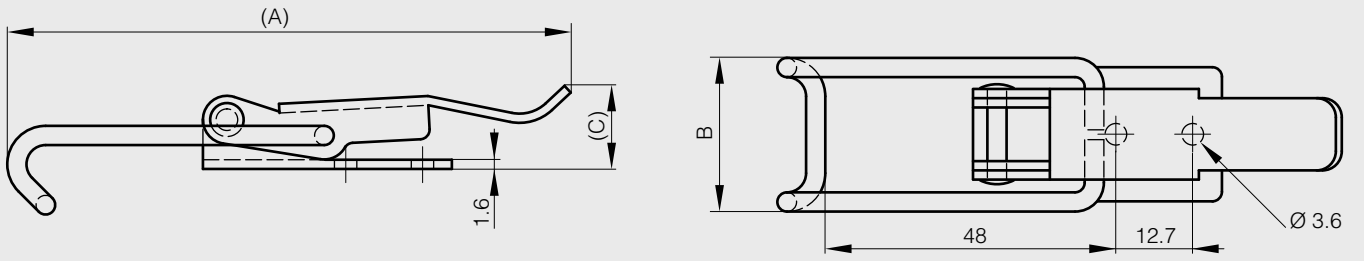

Alternative strike for toggle latches

METALIKA Locking systems KACIN
www.metalika-kacin.com

A	B	part number	material	finish	weight
21.4	22.4	**16-7-3872**	304 stainless steel	raw	9g

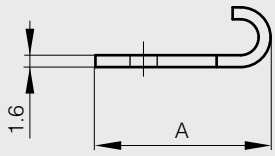

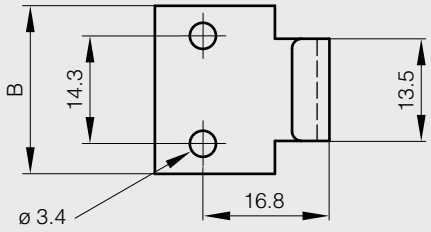

Verschlusslager

Mat.: St, galv. verzinkt
Spannband: Gummi, schwarz

Art.-Nr. 5812
Länge Spannband: 60 mm

Ersatzbedarf:
loses Spannband **Art.-Nr. 5812 A**

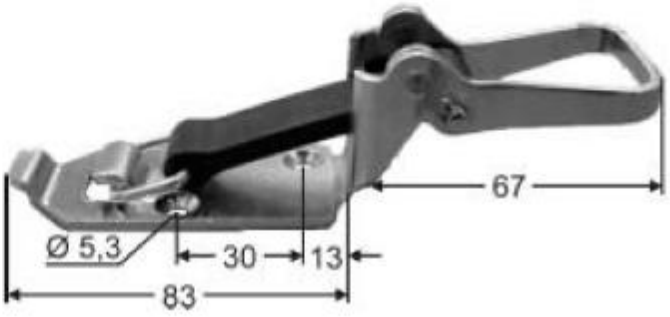

Art.-Nr. 5811
Länge Spannband: 77,5 mm

Ersatzbedarf:
loses Spannband **Art.-Nr. 5811 A**

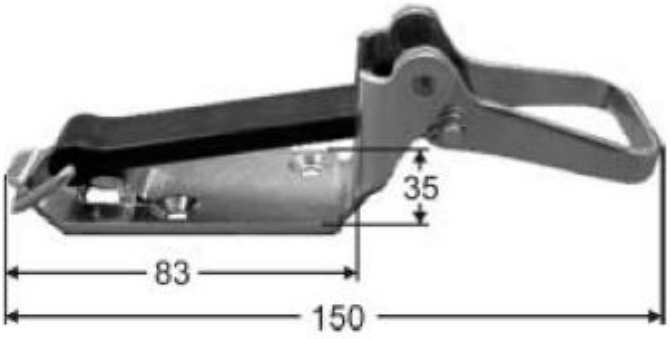

Im Bedarfsfalle gesondert bestellen:

Art.-Nr. 5804

Gummiplatte zu Nr. 5811/12

Spatenverschluss

Mat.: St, roh-blank

Art.-Nr. 5810

Ferner gegen Aufpreis galv. verzinkt lieferbar (Art.-Nr. 5810 Z)

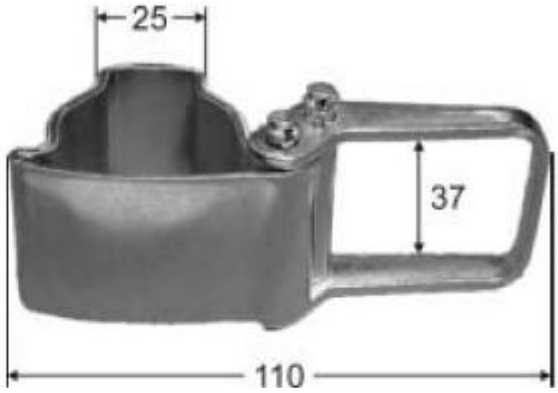

Gummi-Metallpuffer

Ausführung: schwarzer Gummipuffer auf verz. Metallplatte mit Innengewinde aufvulkanisiert

Art.-Nr.	D	H	Gewinde
12300	15 mm	15 mm	M 4
12301	20 mm	20 mm	M 6
12302	20 mm	25 mm	M 6
12304	25 mm	15 mm	M 6
12305	25 mm	20 mm	M 6
12306	25 mm	30 mm	M 6
12307	30 mm	30 mm	M 8
12308	30 mm	40 mm	M 8
12310	40 mm	30 mm	M 8
12311	40 mm	35 mm	M 8
12312	50 mm	40 mm	M 10

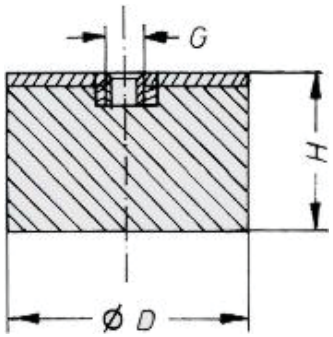

Weitere Abmessungen auf Anfrage

Haubenhalter

Art.-Nr. 3529
kompl. Haubenhalter

bestehend aus:

Art.-Nr. 3529 Anhaker
loser Anhaker
Mat.: St, galv. verzinkt

Art.-Nr. 3529 A
loses Gummiteil
Mat.: EPDM, schwarz
60° +/- 5° Shore

Art.-Nr. 3529 Bolzen
loser Bolzen
mit Scheibe und Splint
Mat.: St, galv. verzinkt

Art.-Nr. 3529 Böckchen
loses Böckchen
Mat.: St, galv. verzinkt
Ausführung: gelocht

Haubenhalter

Art.-Nr. 3533
kompl. Haubenhalter

bestehend aus:

Art.-Nr. 3533 Anhaker loser Anhaker Mat.: St, galv. verzinkt	**Art.-Nr. 3533 A** loses Gummiteil Mat.: NR, schwarz 60° +/- 5° Shore
Art.-Nr. 3533 Bolzen loser Bolzen mit Scheibe und Splint Mat.: St, galv. verzinkt	**Art.-Nr. 3533 Böckchen** loses Böckchen Mat.: St, galv. verzinkt Ausführung: ungelocht

Kabeltüllen

einseitig
Mat.: Gummi, schwarz

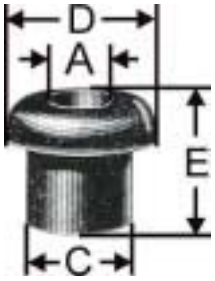

Art.-Nr.	A	C	D	E
2602	6,0 mm	10,0 mm	14,0 mm	12,0 mm
2614	8,0 mm	12,0 mm	16,0 mm	13,5 mm
2601	10,0 mm	14,0 mm	19,0 mm	15,0 mm

Flexibler Over-Center Hebelspannverschluss

SR 5597

Griff: Gummi, schwarz

Halter und Klammer:Edelstahl

- Niedriges Profil
- Der verdeckte Halter wird unter dem Verschluss befestigt
- nicht korrodierend
- Befestigung mit M4 Schrauben (nicht mitgeliefert)

Artikelnummer	Stück/VPE
493577	20

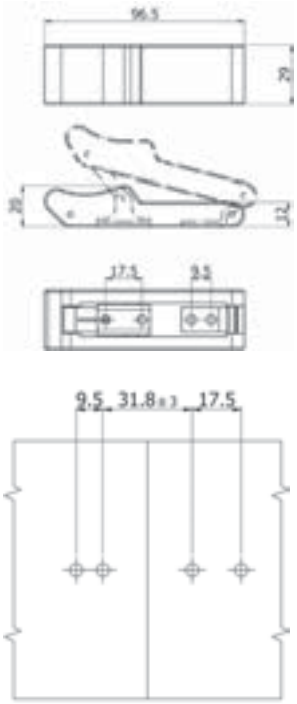

Befestigungsmaße

Einstellbarer Hebelverschluss

SR 5433

Stahl, verzinkt / 304 Edelstahl

- Einstellbarer Verschluss
- Sekundärer Verriegelungsknopf verhindert ungewolltes Öffnen
- für M4 Befestigungen
- Wird mit Halter geliefert

Artikelnummer	Material	Stück/VPE
493596	Edelstahl	10
493597	Verzinkter Stahl	20

Inox

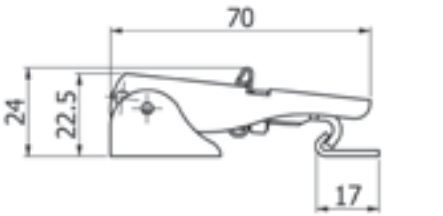

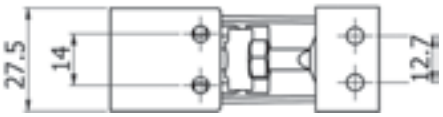

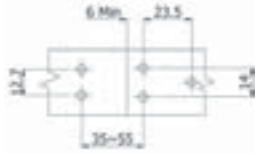

Platte für den Halter — Platte für den Verschluss

Befestigungsmaße

tel | **0180 389 0089** fax | **0180 389 0980** **(Festnetzpreis 9ct/Min., Mobilfunkpreise max. 42ct/Min.)**

Serie 1429L

- Max. Belastbarkeit 1.000 N
- Betriebsbelastung 700 N
- Modernes, flaches Design
- Kleine Baugröße bei großer Belastbarkeit
- Werkstoff: Stahl oder Stahl rostfrei
- Verschiedene Ausführungen – universell anwendbar
- Mit selbstrastender Sicherung
- Plombiermöglichkeit

Serie E2.03.

- Zugbelastung max. 1200 N
- Mit Sicherung und Schlossöse lieferbar

- Max. tensile strength 1200 N
- Available with secondary lock and hasp

Serie E2.03.

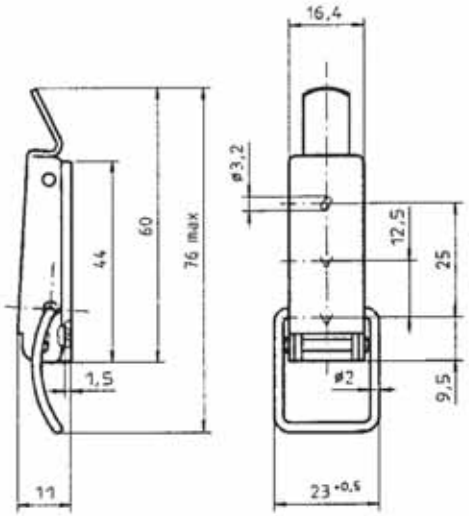

Artikel-Nr.: Part No.:	Material/Oberfläche: Material/Finish:
E2.03.00.04/6	Stahl / verzinkt Stahl / zinc-plated
E2.03.00.30/6	Stahl / rostfrei Stainless steel

Mit Schlossöse
With hasp

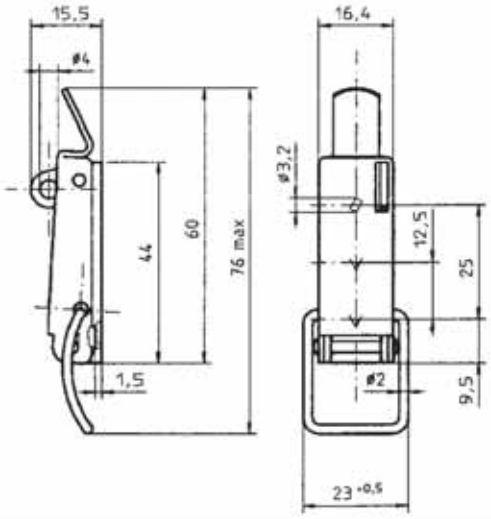

Artikel-Nr.: Part No.:	Material/Oberfläche: Material/Finish:
E2.03.01.04/6	Stahl / verzinkt Stahl / zinc-plated
E2.03.01.30/6	Stahl / rostfrei Stainless steel

Sicherung
secondary
lock

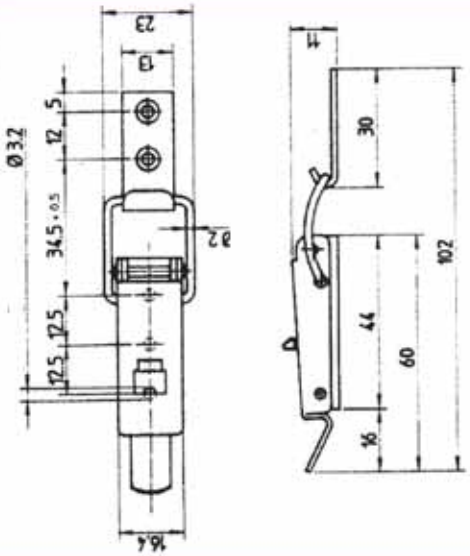

Artikel-Nr.: Part No.:	Material/Oberfläche: Material/Finish:
E2.03.02.04/6	Stahl / verzinkt Stahl / zinc-plated
E2.03.02.30/6	Stahl / rostfrei Stainless steel

Gegenhaken / Strike Serie E2.03.

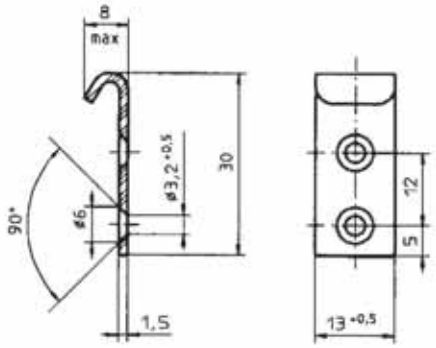

Artikel-Nr.: Part No.:	Material/Oberfläche: Material/Finish:
E2.03.00.04/5	Stahl / verzinkt Steel / zinc-plated
E2.03.00.30/5	Stahl / rostfrei Stainless steel

Einbauanleitung / Installation Instruction Serie E2.03.

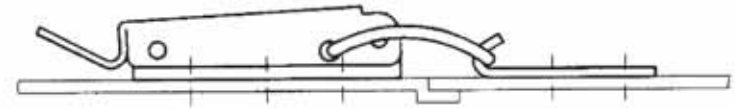

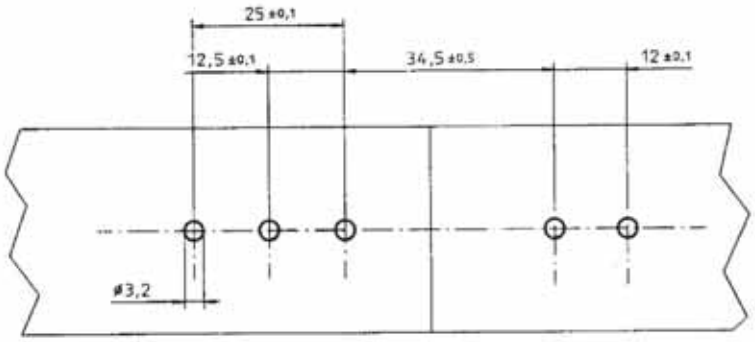

Serie 1429L

Mit Spannhaken

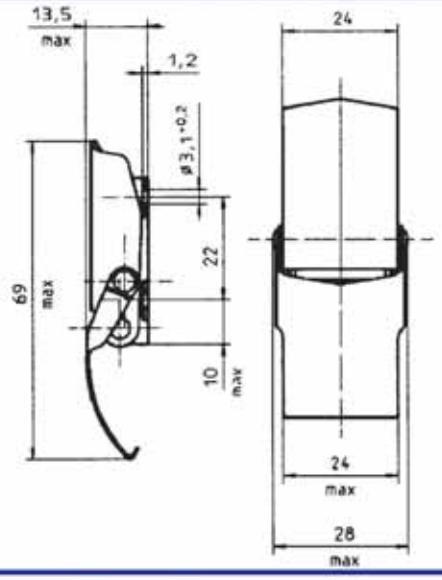

Artikel-Nr. :	Material/Oberfläche:
1429L02-1-1BP	Stahl / rostfrei / passiviert

Mit Spannbügel

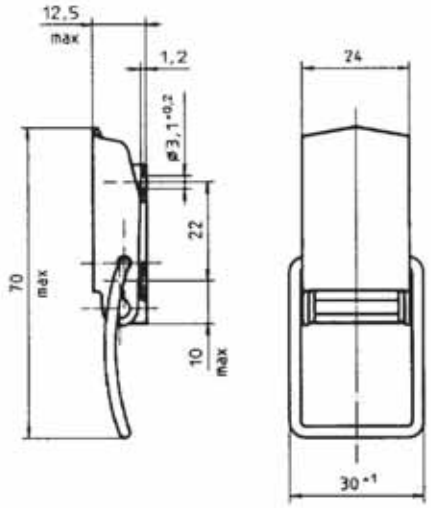

Artikel-Nr. :	Material/Oberfläche:
1429L02-2-1BP	Stahl / rostfrei / passiviert

Mit gekröpftem Spannbügel

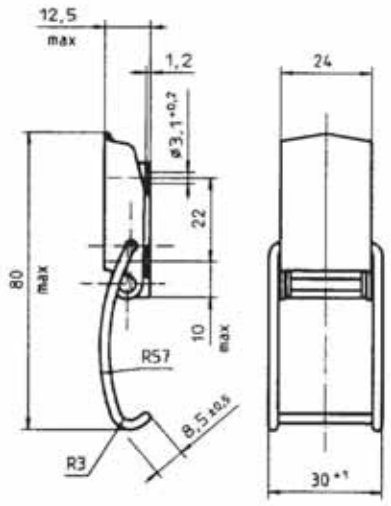

Artikel-Nr. :	Material/Oberfläche:
1429L02-3-1BP	Stahl / rostfrei / passiviert

Serie 1429L

Mit Spannhaken und Sicherung

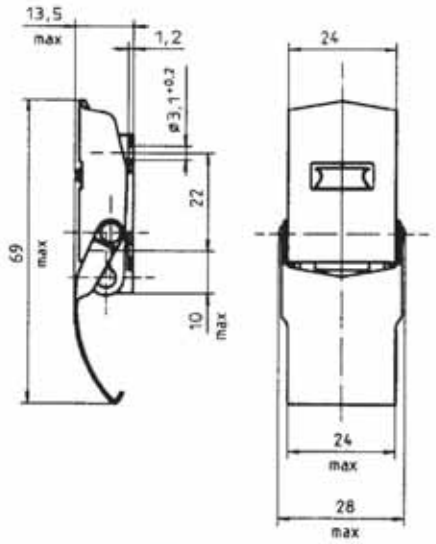

Artikel-Nr. :	Material/Oberfläche:
1429L02-1X1AG	Stahl / verzinkt und farblos chromatiert
1429L02-1X1BP	Stahl rostfrei / passiviert

Mit Spannbügel und Sicherung

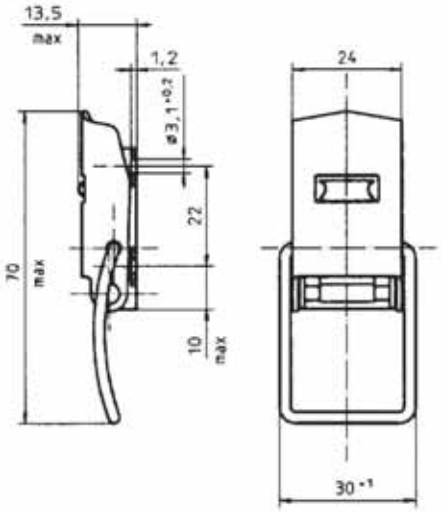

Artikel-Nr. :	Material/Oberfläche:
1429L02-2X1BP	Stahl rostfrei / passiviert

Mit gekröpftem Spannbügel und Sicherung

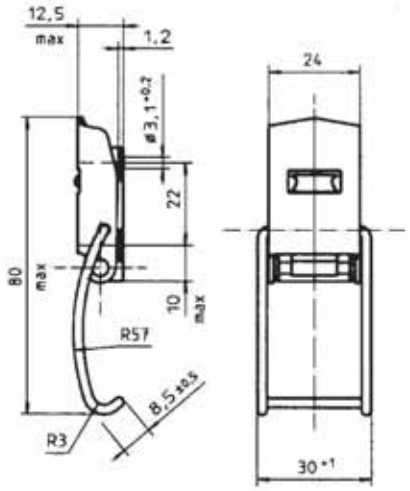

Artikel-Nr. :	Material/Oberfläche:
1429L02-3X1BP	Stahl / rostfrei / passiviert

Gegenhaken Serie 1429L

Für Spannhaken

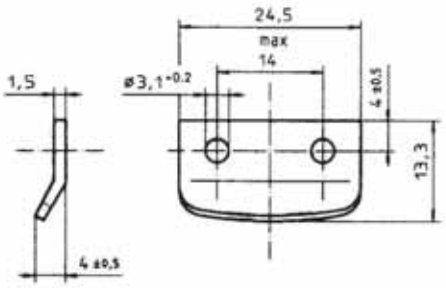

Artikel-Nr. :	Material/Oberfläche:
1429L8-1AG	Stahl / verzinkt und farblos chromatiert
1429L8-1BP	Stahl rostfrei / passiviert

Für Spannbügel

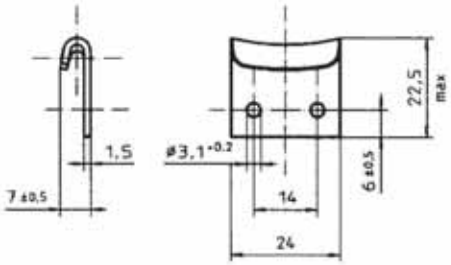

Artikel-Nr. :	Material/Oberfläche:
1429L9-1BP	Stahl rostfrei / passiviert

Einbauanleitung Serie 1429L

Spannverschluß mit Spannhaken / Gegenhaken für Spannhaken

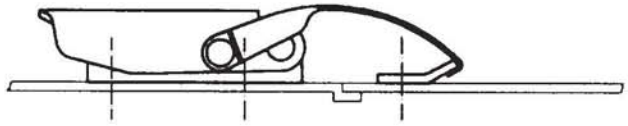

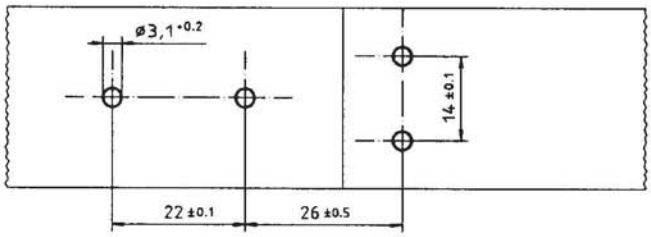

1429L02-1-

1429L8-

Spannverschluß mit Spannbügel / Gegenhaken für Spannbügel

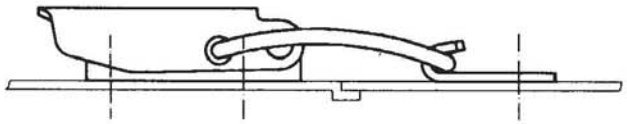

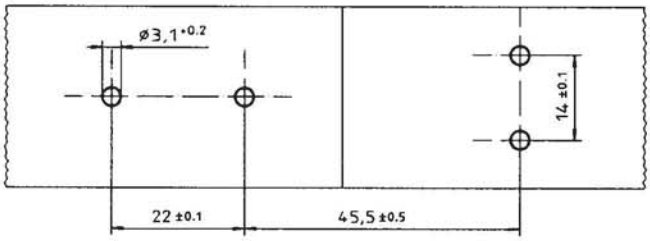

1429L02-2-

1429L9-

Spannverschluß mit gekröpftem Spannbügel

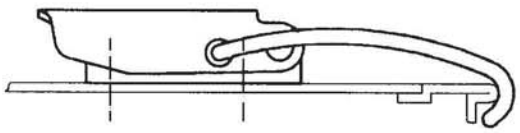

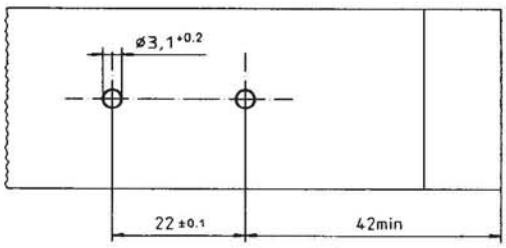

1429L02-3-

(1429L9-)

Serie V917L

- Max. Belastbarkeit 3.600 N
- Betriebsbelastung 2.700 N
- Einstellbar bis 12 mm
- Mit selbstrastender Sicherung
- Mit Schloßöse
- Spannhaken abgedeckt
- Niet-/Schraub- oder Schweiß-befestigung
- Verdrehsicher
- Werkstoff: Stahl oder Stahl rostfrei

Serie V917L

Offene Basis

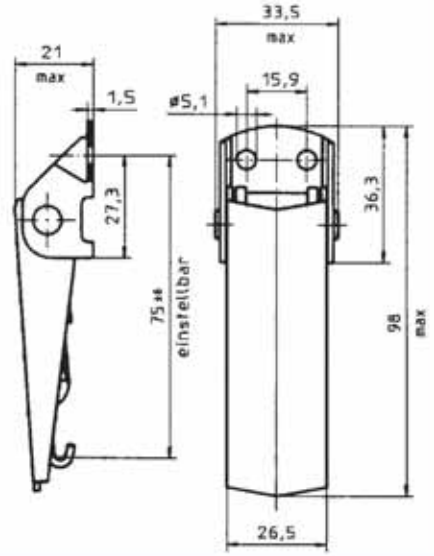

Artikel-Nr. :	Material/Oberfläche:
V917L01-1-1AG	Stahl / verzinkt und farblos chromatiert
V917L01-1-1BP	Stahl rostfrei / passiviert

Hohe Basis

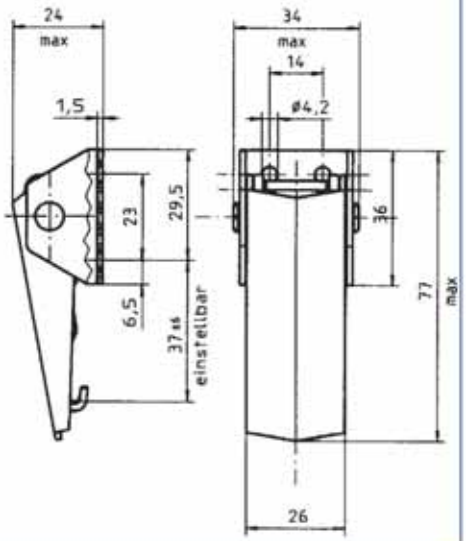

Artikel-Nr. :	Material/Oberfläche:
V917L12-1-1AA	Stahl / verzinkt und farblos chromatiert

Offene Basis mit Schloßöse

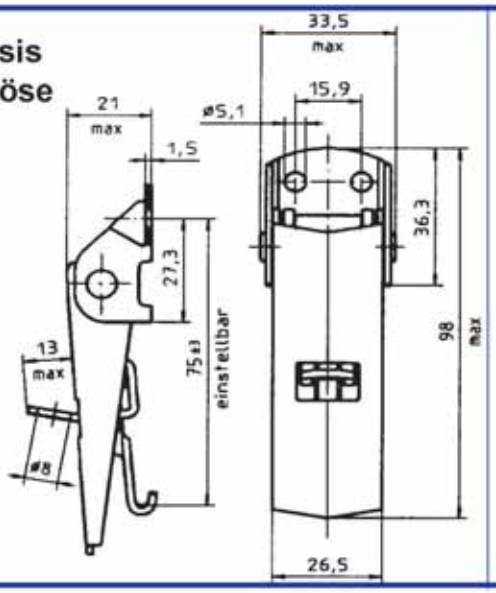

Artikel-Nr. :	Material/Oberfläche:
V917L01-1Y1AG	Stahl / verzinkt und farblos chromatiert

Serie V917L

Mit Sicherung offene Basis

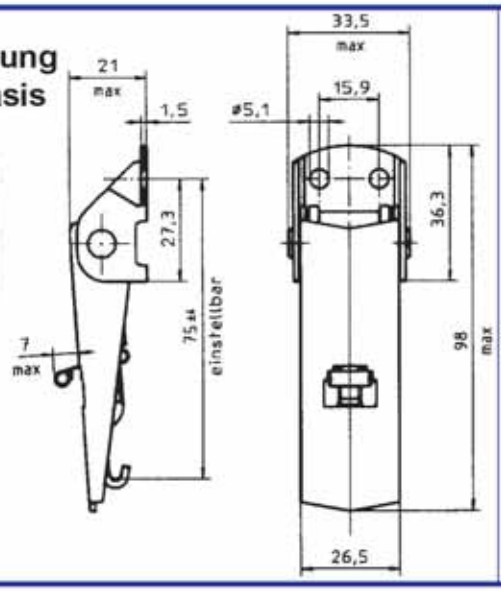

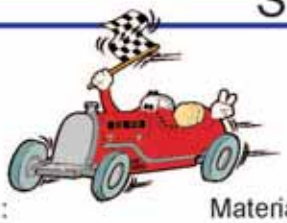

Artikel-Nr. :	Material/Oberfläche:
V917L01-1X1AG	Stahl / verzinkt und farblos chromatiert
V917L01-1X1BP	Stahl rostfrei / pasiviert
V917L01-1X1BT	Stahl rostfrei / schwarz verchromt

Mit Sicherung hohe Basis

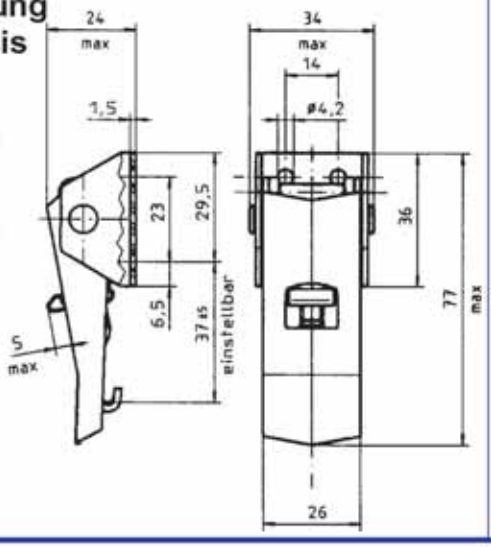

Artikel-Nr. :	Material/Oberfläche:
V17L12-2X1AA	Stahl / verzinkt und farblos chromatiert

Mit Sicherung für gewölbte Flächen (R min = 125 mm)

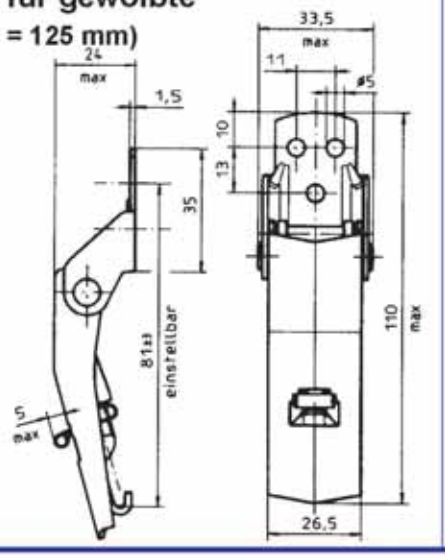

Artikel-Nr. :	Material/Oberfläche:
1449L02-1X1AG	Stahl / verzinkt und farblos chromatiert
1449L02-1X1BP	Stahl rostfrei / pasiviert

Gegenhaken Serie V917L

Kurz

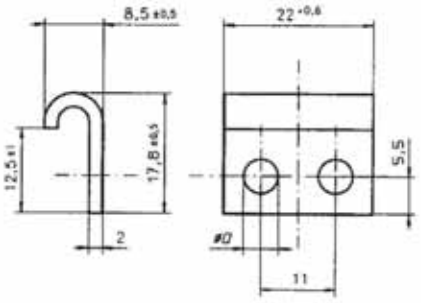

Artikel-Nr. :	D	Material/Oberfläche:
V917L11-1-1AG	5,1	Stahl / verzinkt und farblos chromatiert
V917L11-1-3AG	4,2	Stahl verzinkt und farblos chromatiert
V917L11-1-1BP	5,1	Stahl rostfrei / passiviert
V917L11-1-1BT	5,1	Stahl rostfrei / schwarz verchromt

Mit Führung

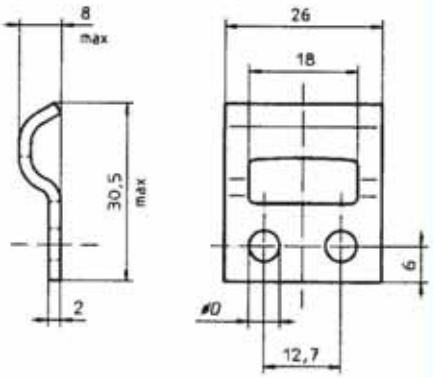

Artikel-Nr. :	D	Material/Oberfläche:
V951L50-1AG	4,2	Stahl / verzinkt und farblos chromatiert
V951L50-5AG	5,1	Stahl verzinkt und farblos chromatiert
V951L50-5BP	5,1	Stahl rostfrei / passiviert
V951L50-1BP	4,2	Stahl rostfrei / passiviert

D = Durchmesser

Einbauanleitung V917L

Spannverschluß offene Basis / Gegenhaken kurz

V917L01-

V917L11-

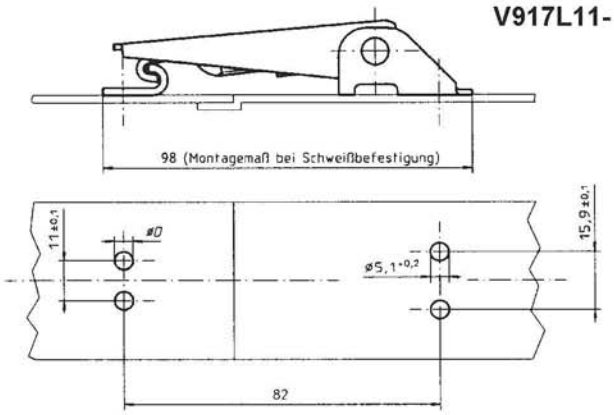

Spannverschluß hohe Basis / Gegenhaken kurz

V917L12-

V917L11-

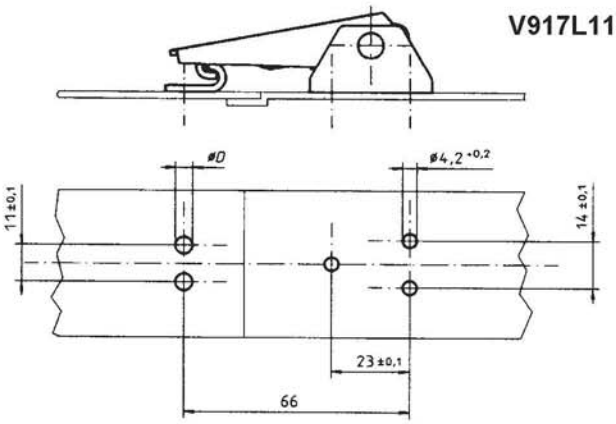

Spannverschluß offene Basis / Gegenhaken mit Führung

V917L01-

V917L50-

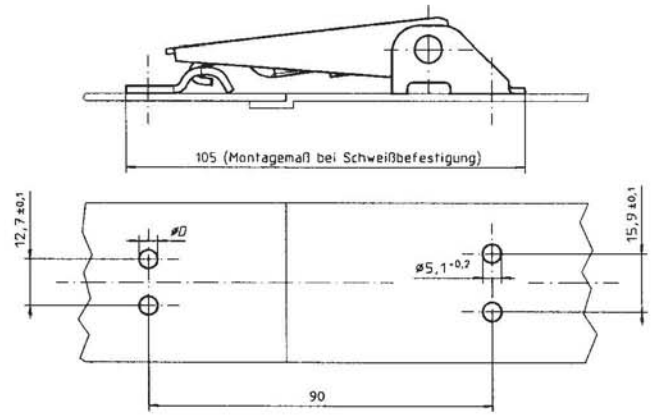

Spannverschluß für gewölbte Flächen / Gegenhaken mit Führung

1449L02-

V917L50-

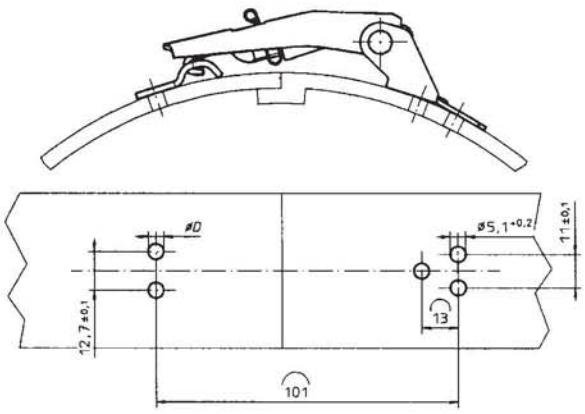

Durchmesser D entsprechend der Gegenhaken-Ausführung wählen

Serie V951L

- Max. Belastbarkeit 2.250 N
- Betriebsbelastung 1.550 N
- Feineinstellbar bis 8 mm
- Mit selbstrastender Sicherung
- Mit Schloßöse
- Niet-/Schraub- oder Schweiß-befestigung
- Verdrehsicher
- Werkstoff: Stahl oder Stahl rostfrei
- Kombinierbar mit Aushebefeder

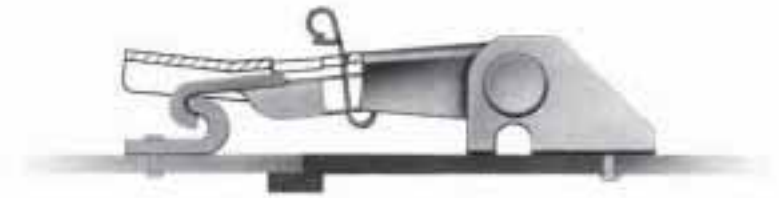

Serie V951L

Offene Basis

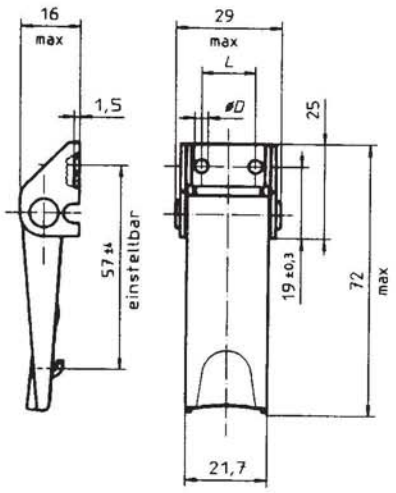

Artikel-Nr. :	D	L	Material/Oberfläche:
V951L02-1-5AF	4,2	12,7	Stahl / verzinkt und gelb chromatiert
V951L02-1-5AD	4,2 Innenteile:	12,7	Stahl / verchromt Stahl verzinkt und farblos chromatiert
V951L02-1-5BP	4,2	12,7	Stahl rostfrei / passiviert

Verdeckte Basis

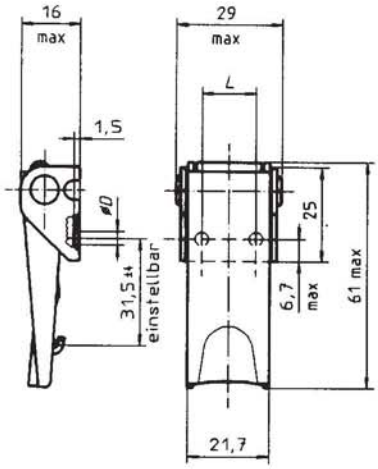

Artikel-Nr. :	D	L	Material/Oberfläche:
V951L03-1-5AF	4,2	12,7	Stahl / verzinkt und gelb chromatiert
V951L03-1-5AG	4,2	12,7	Stahl / verzinkt und farblos chromatiert
V951L03-1-5AD	4,2 Innenteile:	12,7	Stahl / verchromt Stahl verzinkt und farblos chromatiert
V951L03-1-5BP	4,2	12,7	Stahl rostfrei / passiviert

Mit Schloßöse

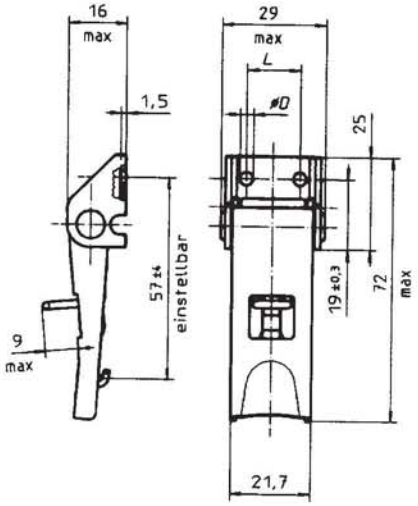

Artikel-Nr. :	Material/Oberfläche:
V951L01-1Y5AF	Stahl / verzinkt und gelb chromatiert
V951L01-1Y5BP	Stahl / rostfrei passiviert

Serie V951L

Mit Sicherung offene Basis

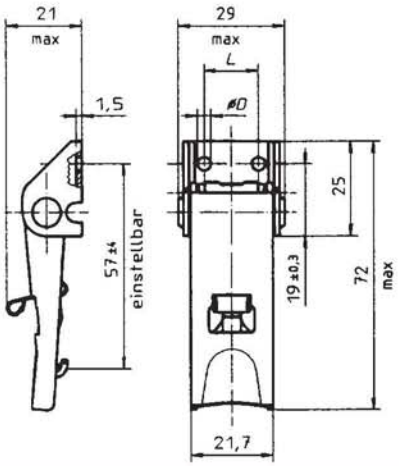

Artikel-Nr. :	D	L	Material/Oberfläche:
V951L04-1X5AF	4,2	12,7	Stahl / verzinkt und gelb chromatiert
V951L04-1X5AD	4,2	12,7	Stahl / verchromt
	Innenteile:		Stahl verzinkt und farblos chromatiert
V951L04-1X5BP	4,2	12,7	Stahl rostfrei / passiviert

Mit Sicherung verdeckte Basis

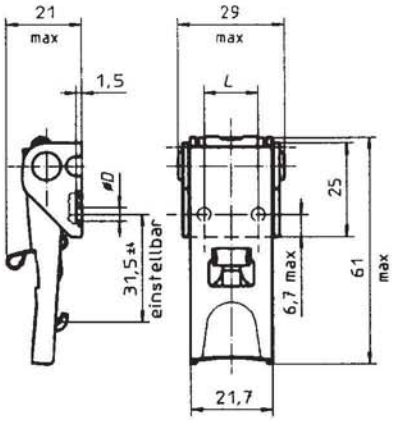

Artikel-Nr. :	D	L	Material/Oberfläche:
V951L03-1X5AF	4,2	12,7	Stahl / verzinkt und gelb chromatiert
V951L03-1X5AD	4,2	12,7	Stahl / verchromt
	Innenteile:		Stahl verzinkt und farblos chromatiert
V951L03-1X5BP	4,2	12,7	Stahl rostfrei / passiviert

Mit Sicherung hohe Basis

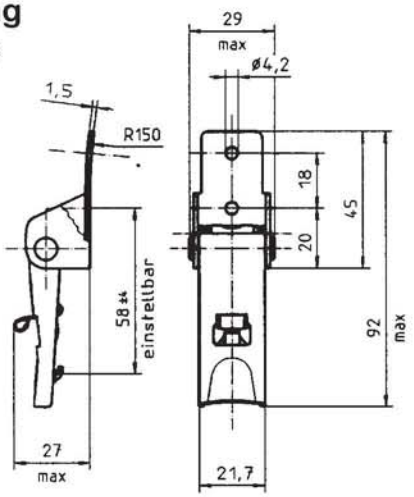

Artikel-Nr. :		Material/Oberfläche:
V951L05-1X1AG		Stahl / verzinkt und farblos chromatiert
	Sicherung:	Stahl rostfrei / passiviert
V951L05-1X1BP		Stahl rostfrei / passiviert

Gegenhaken Serie V951L

Kurz

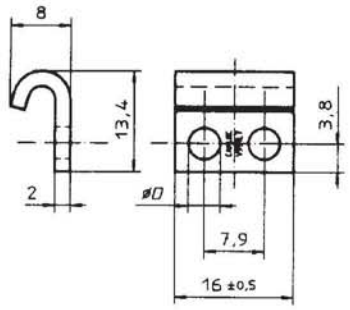

Artikel-Nr. :	D	Material/Oberfläche:
V951L7-5AF	4,2	Stahl / verzinkt und gelb chromatiert
V951L7-5AG	4,2	Stahl / verzinkt und farblos chromatiert
V951L7-5AD	4,2	Stahl / verchromt
V951L7-5BP	4,2	Stahl rostfrei / passiviert

Mit Führung

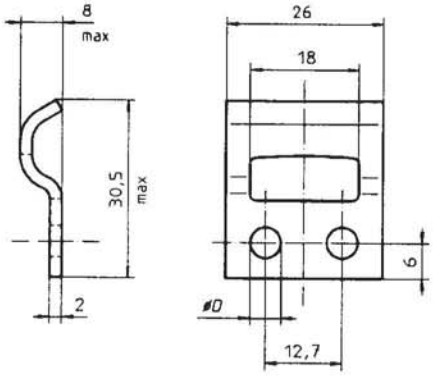

Artikel-Nr. :	D	Material/Oberfläche:
V951L50-1AF	4,2	Stahl / verzinkt und gelb chromatiert
V951L50-1AG	4,2	Stahl / verzinkt und farblos chromatiert
V951L50-1BP	4,2	Stahl / rostfrei passiviert

Eckbefestigung

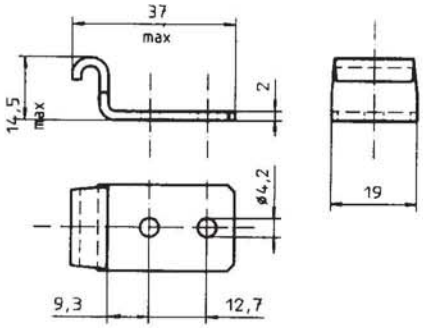

Artikel-Nr. :	Material/Oberfläche:
V951L52-1AF	Stahl / verzinkt und gelb chromatiert
V951L52-1BP	Stahl rostfrei / passiviert

D = Durchmesser; L = Lochabstand

Einbauanleitung Serie V951L

Spannverschluß offene Basis / Gegenhaken kurz

V951L02-
V951L04-
V951L01-

V951L7-

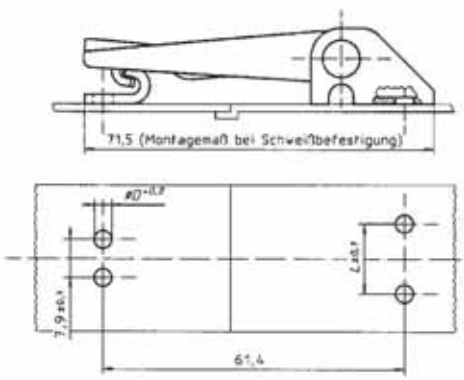

Spannverschluß verdeckte Basis / Gegenhaken kurz

V951L03-

V951L7-

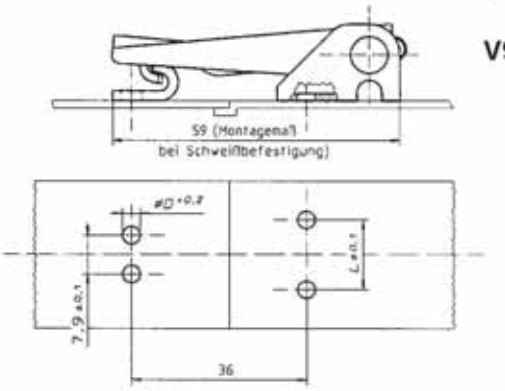

Durchmesser D und Abstand L entsprechend der Gegenhaken- und Spannverschluß-Ausführung wählen

Spannverschluß offene Basis / Gegenhaken mit Führung

V951L02-
V951L04-
V951L01-

V951L50-

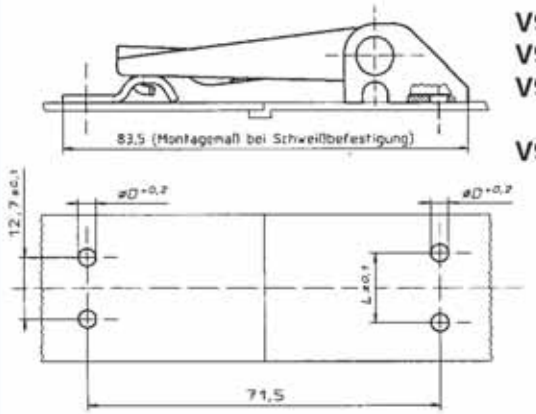

Spannverschluß verdeckte Basis / Gegenhaken mit Führung

V951L03-

V951L50-

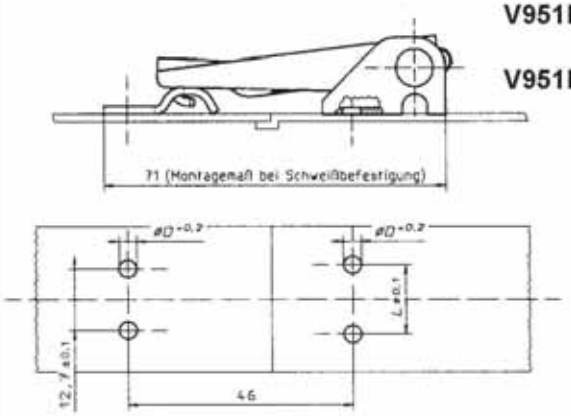

Durchmesser D und Abstand L entsprechend der Gegenhaken- und Spannverschluß-Ausführung wählen

Spannverschluß offene Basis / Gegenhaken Eckbefestigung

V951L02-
V951L04-
V951L01-

V951L52-

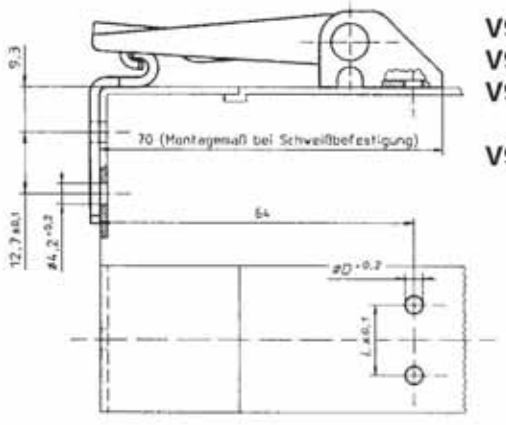

Spannverschluß verdeckte Basis / Gegenhaken Eckbestigung

V951L03-

V951L52-

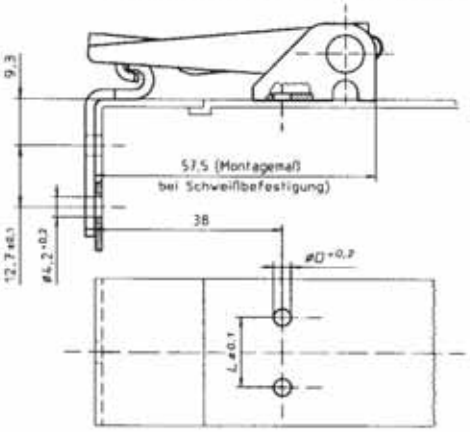

Durchmesser D und Abstand L entsprechend der Spannverschluß-Ausführung wählen

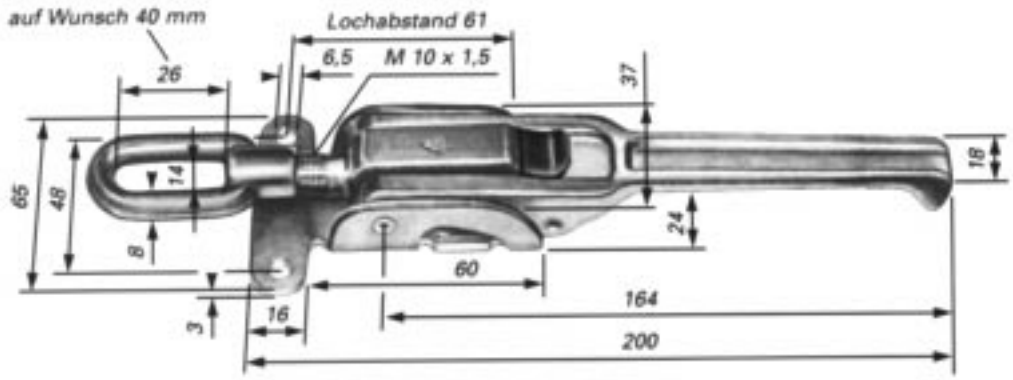

3840 **Spannverschluss Größe 0**

mit Sicherungstaste, Längenverstellung 15 mm,

Artikel-Nr.	**Material/Oberfläche**
3840-00-0000	Stahl roh, zum Anschweißen
3840-00-2010	Stahl, verzinkt, zum Anschrauben

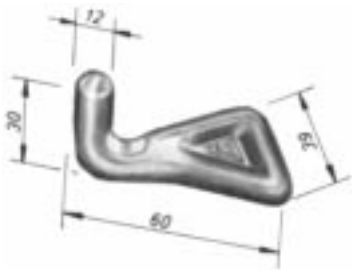

Gegenhaken

Artikel-Nr.:	**Material/Oberfläche:**
3843	Stahl roh, zum Anschweißen

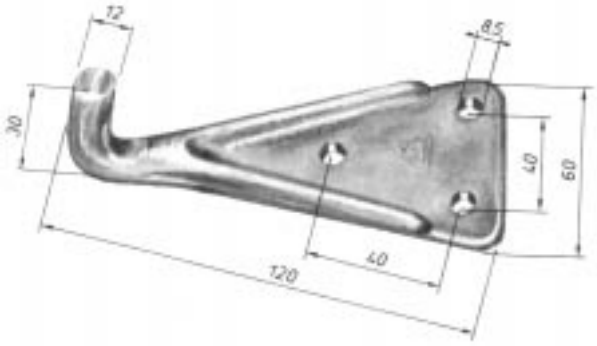

3844	Stahl, verzinkt, zum Anschrauben

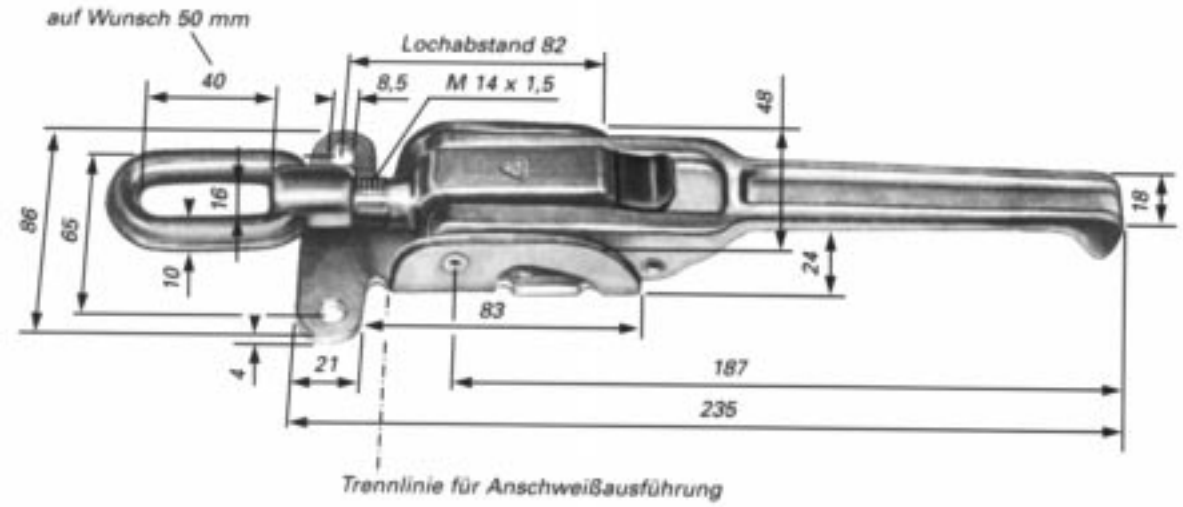

3841 **Spannverschluss Größe 1**

mit Sicherungstaste, Längenverstellung 25 mm,

Artikel-Nr.	**Material/Oberfläche**
3841-00-0000	Stahl roh, zum Anschweißen
3841-00-2010	Stahl, verzinkt, zum Anschrauben

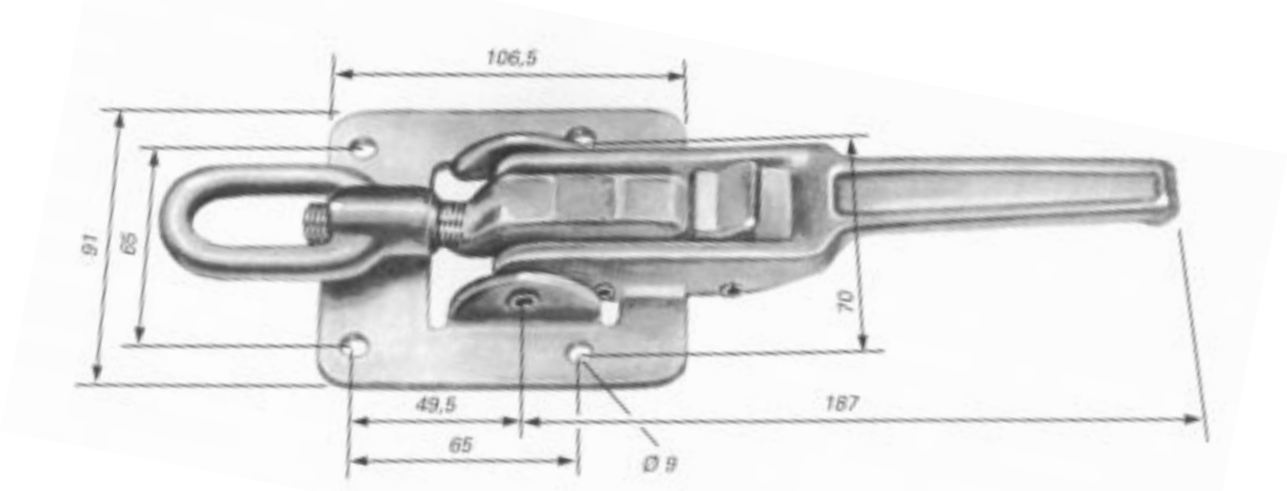

3841.4 **Spannverschluss Größe 1**

wie 3841, jedoch mit 4-Loch-Anschraubplatte

Artikel-Nr.	**Material/Oberfläche**
3841-00-2040	Stahl, verzinkt, zum Anschrauben

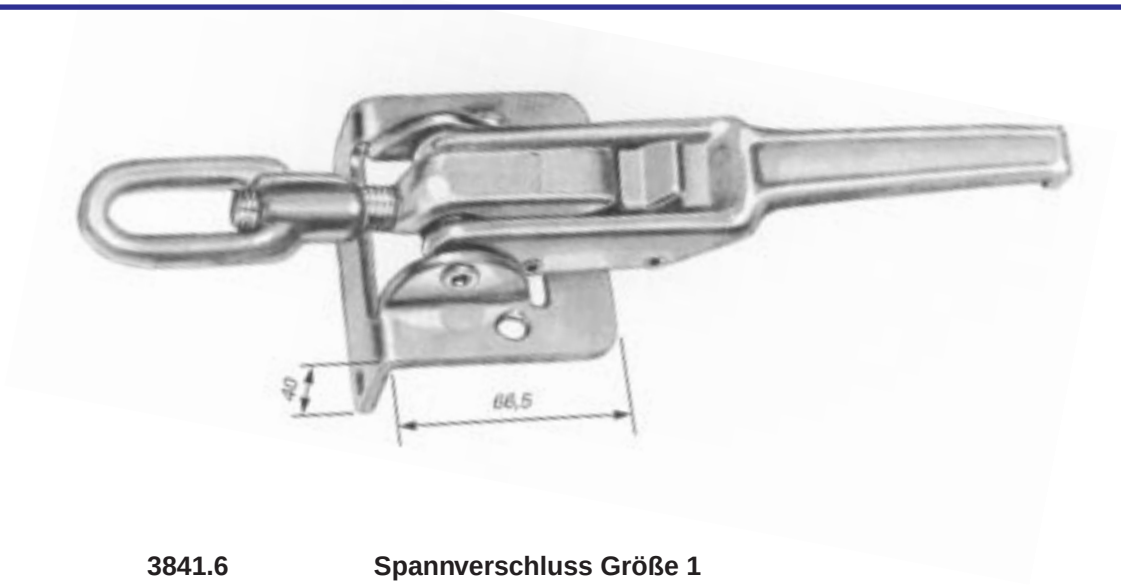

3841.6 **Spannverschluss Größe 1**

wie 3841.4, jedoch mit abgekanteter Grundplatte

Artikel-Nr.	**Material/Oberfläche**
3841-00-2060	Stahl, verzinkt, zum Anschrauben

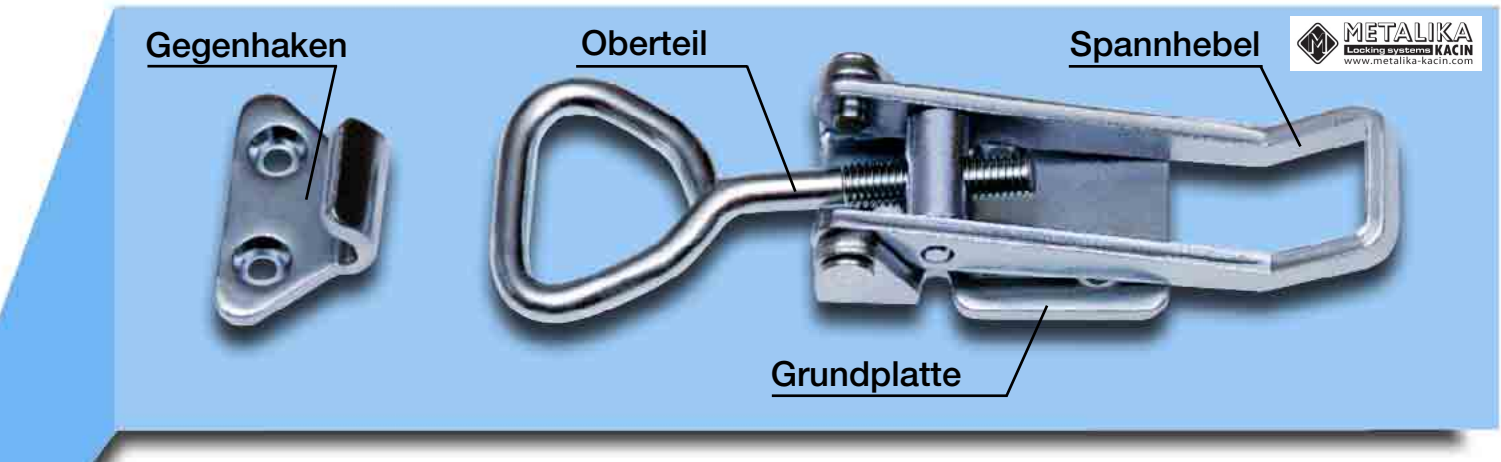

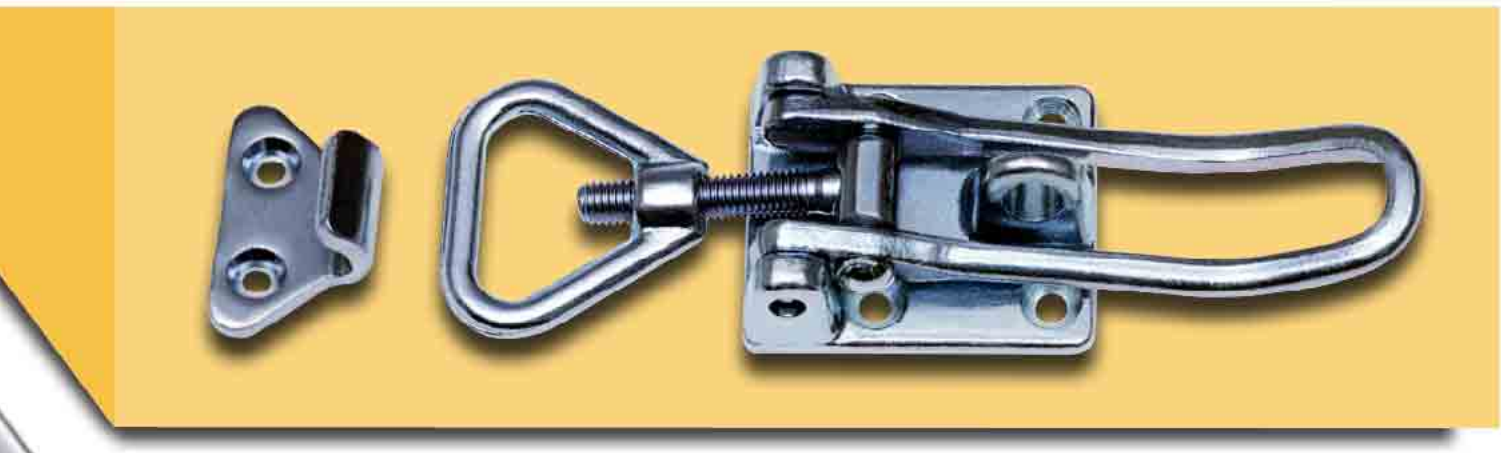

Serie	Material	Verzinkung 12 my	Edelstahl 1.4401	Oberfläche
700	kalt gewalzter Stahl warm gewalzter Stahl	x	x	Elektrolytisch poliert
900	kalt gewalzter Stahl	x	x	
100–500	Stahl geschmiedet	x	Serie 400+500	Elektrolytisch poliert

Serie 701

Schließhaken
15, 18 or 30

Schließhaken
14, 49 or 50

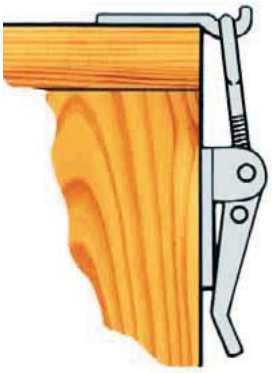

Schließhaken
siehe Seite 31–36

Kombinations-möglichkeiten		Belastung			Gewicht	
Verschluss	Haken	max. empfohlene Belastung			Gewicht per 100 St.	
		Kp	N	Pounds	Kilo	Pounds
701 S/C	15, 30, 49, 50	100	981	220	3,6	7.9
701 TS/C	14, 18	200	1962	440	3,3	7.3
701 HS/C	–	100	981	220	3,2	7.0
701 L/C	15, 30, 49, 50	100	981	220	4,1	9.0
701 TL/C	14, 18	200	1962	440	3,8	8.4
701 HL/C	–	100	981	220	3,7	8.1

701 TS

L = 77–88 2.68”–3.46”

701 S

L = 77–88 3.03”–3.46”

701 HS

L = 75–90 2.95”–3.54”

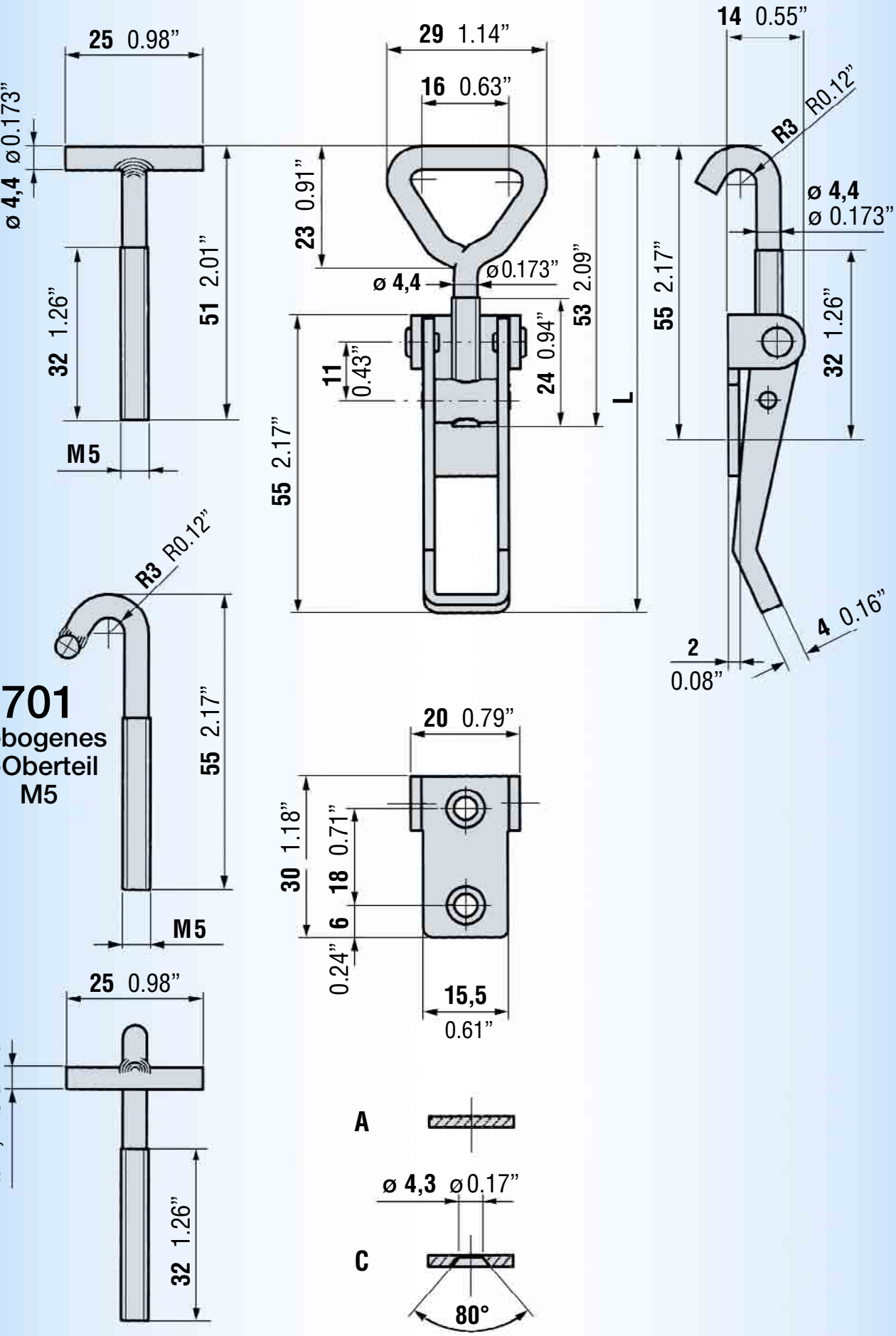

701 TL

L = 82–88 3.23”–3.46”

701 L

L = 82–88 3.23”–3.46”

701 HL

L = 84–90 3.31”–3.54”

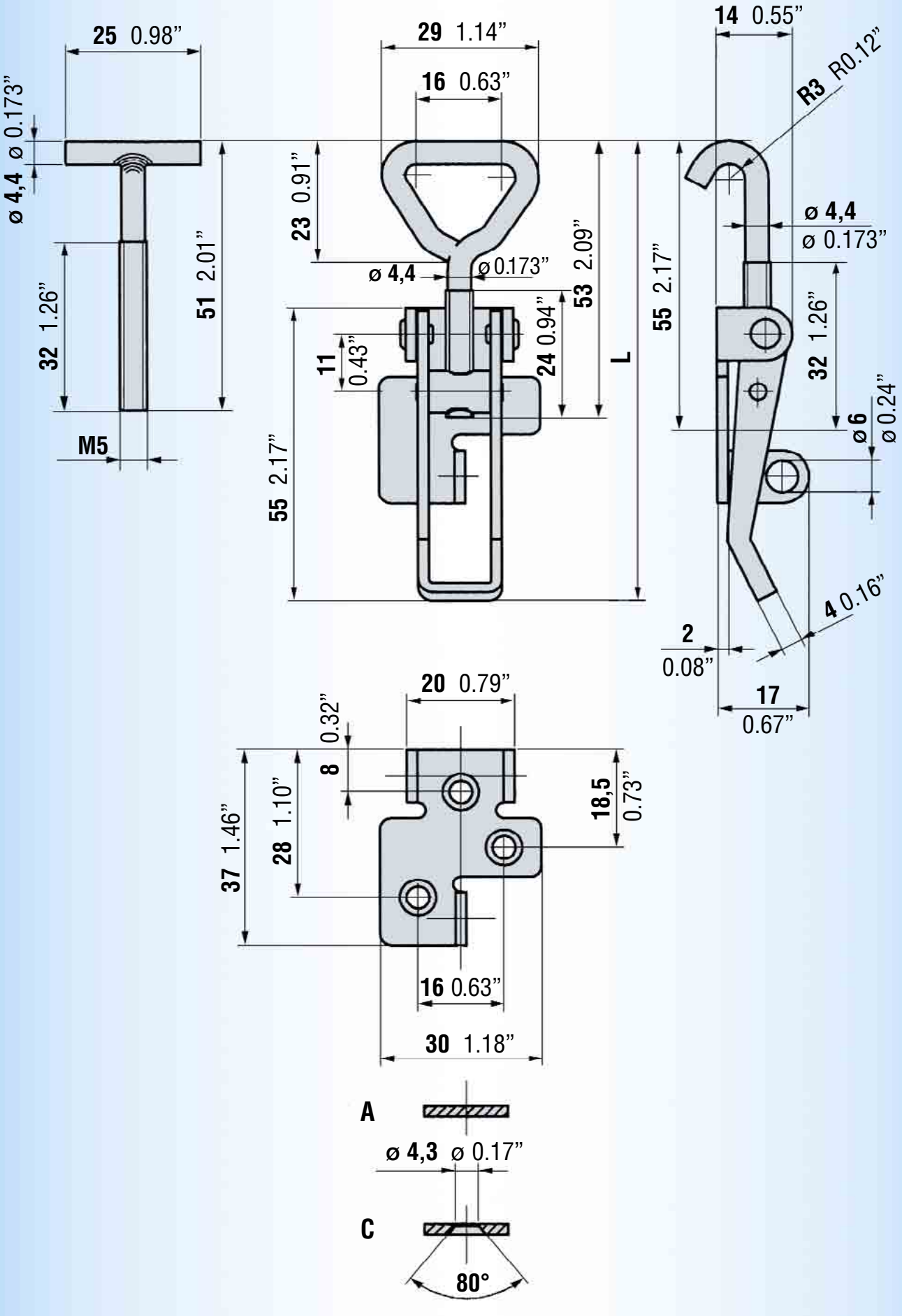

Schließhaken
19 or 31

Schließhaken
10 or 14

Schließhaken
siehe Seite 31–36

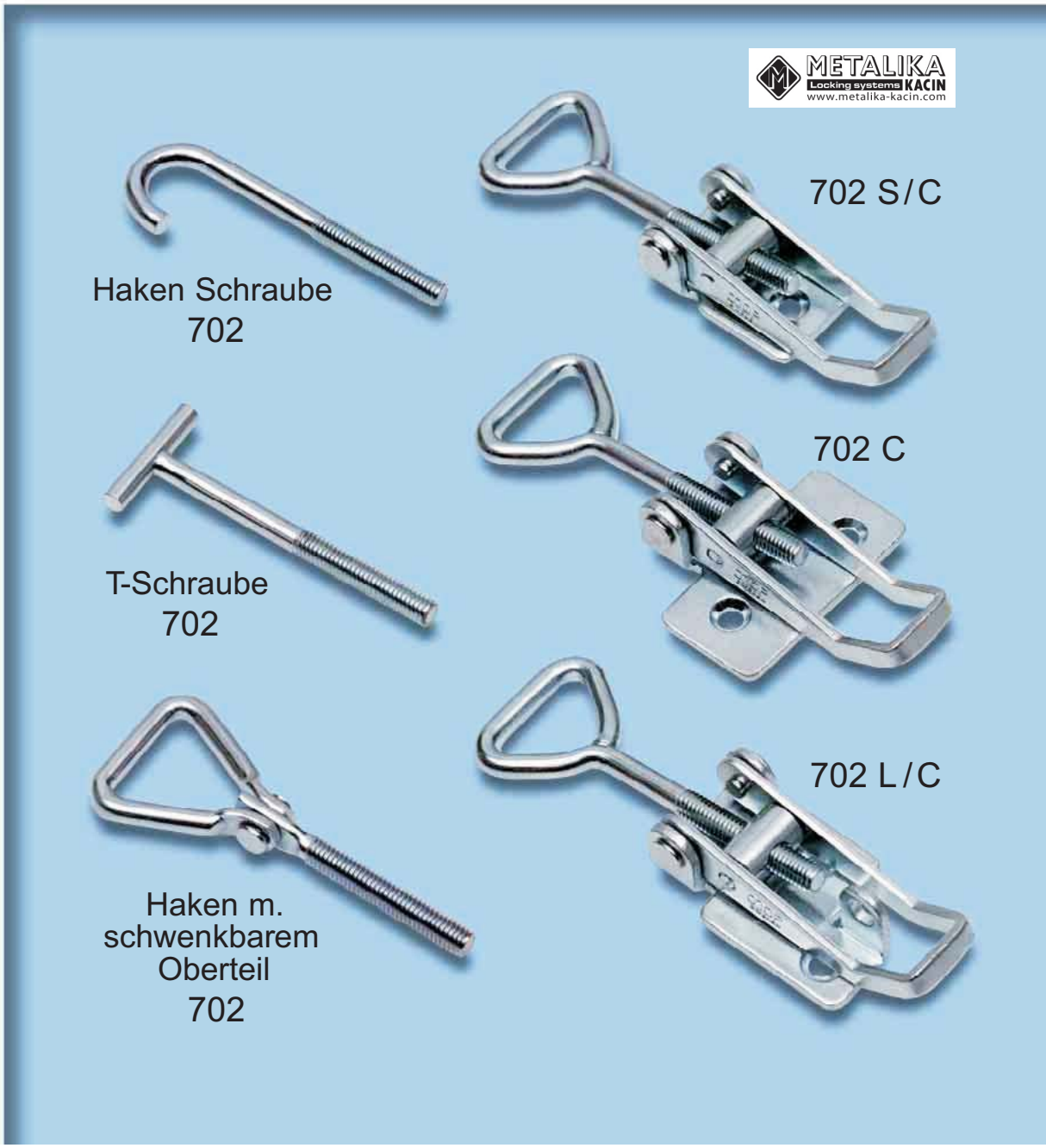

Kombinations-möglichkeiten		Belastung			Gewicht	
Verschluss	Haken	max. empfohlene Belastung			Gewicht per 100 St.	
		Kp	N	Pounds	Kilo	Pounds
702 S/C	10, 31	300	2943	660	7,2	15.9
702 TS/C	14, 19	400	3924	881	6,7	14.8
702 HS/C	–	100	981	220	6,6	14.5
702 S/C Schwenkb.	10, 31	250	2452	550	7,5	16.5
702 L/C	10, 31	300	2943	660	8,0	17.6
702 TL/C	14, 19	400	3924	881	7,4	16.3
702 HL/C	–	100	981	220	7,3	16.1
702 L/C Schwenkb.	10, 31	250	2452	550	8,3	18.3
702 C	10, 31	300	2943	660	8,4	18.5
702 T/C	14, 19	400	3924	881	7,8	17.2
702 H/C	–	100	981	220	7,7	17.0
702 C Schwenkb.	10, 31	250	2452	550	8,6	18.9

702 TS

L = 94 – 112 3.46”–4.41”

702 S

L = 98 – 122 3.86”–4.80”

702 HS

L = 88 – 112 3.46”–4.41”

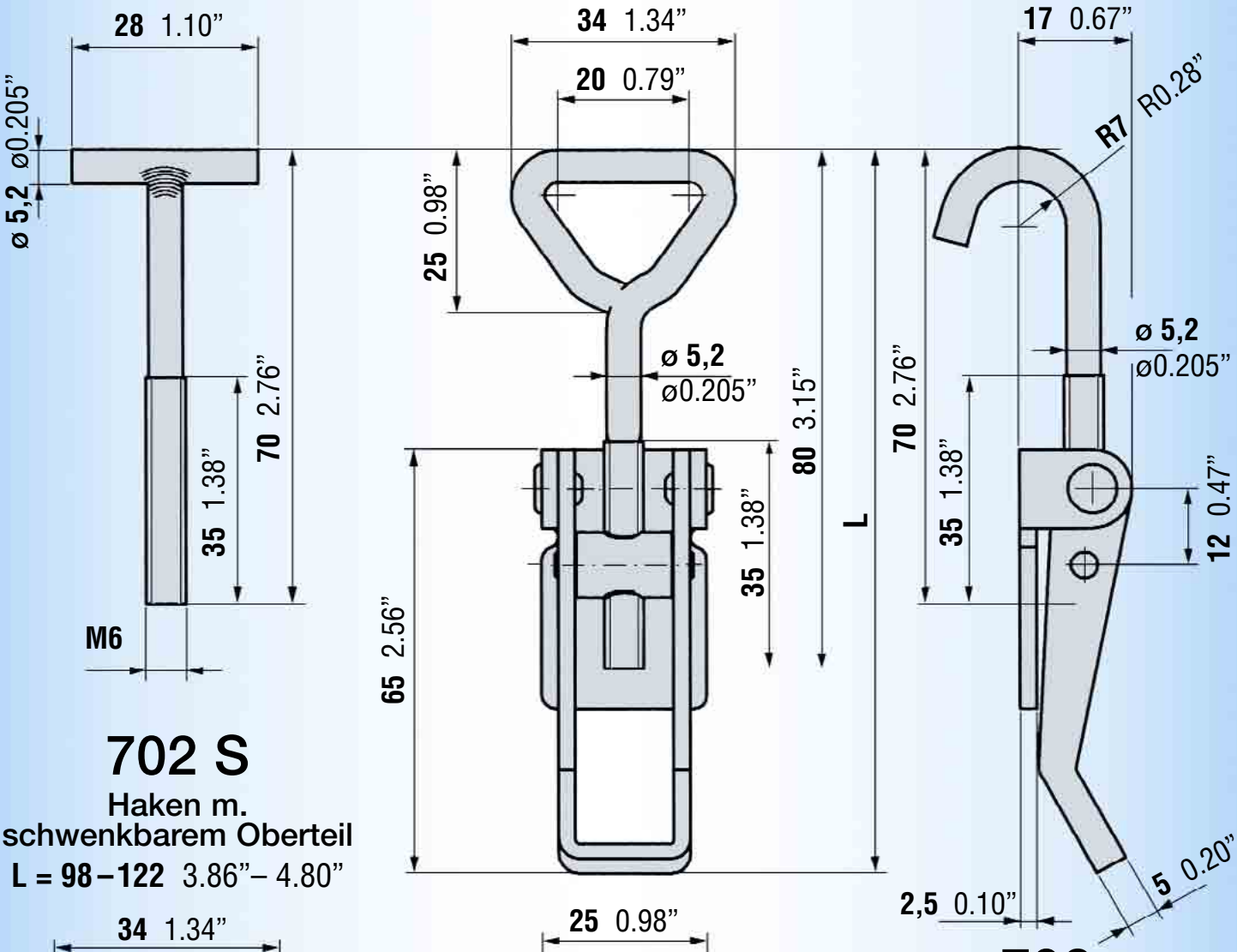

702 S

Haken m. schwenkbarem Oberteil

L = 98 – 122 3.86”– 4.80”

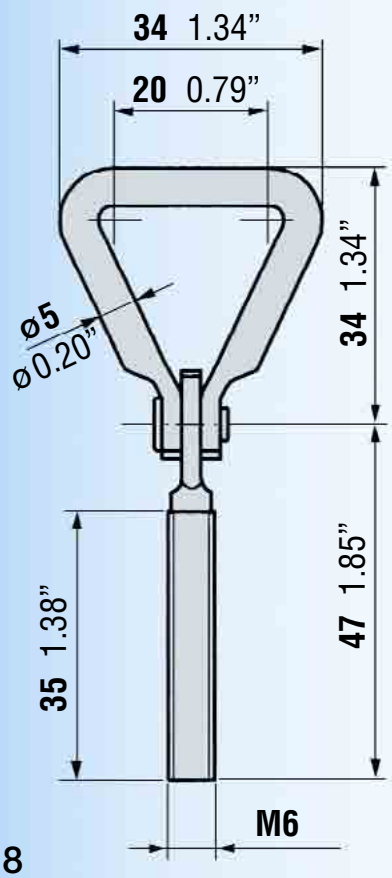

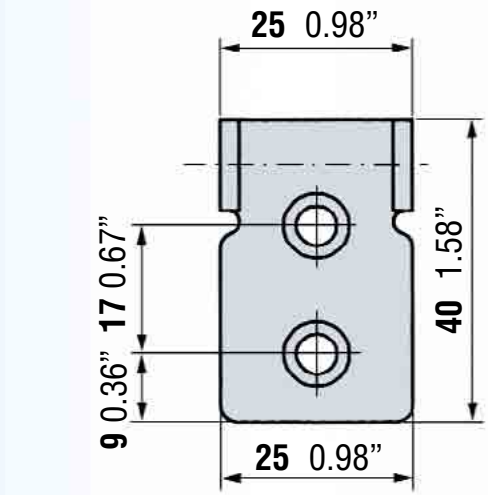

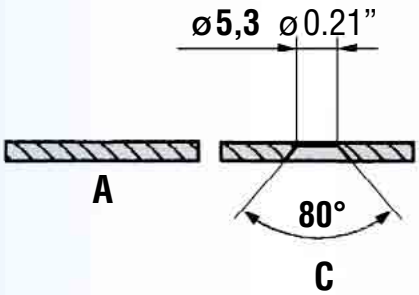

702

gebogenes T-Oberteil M6

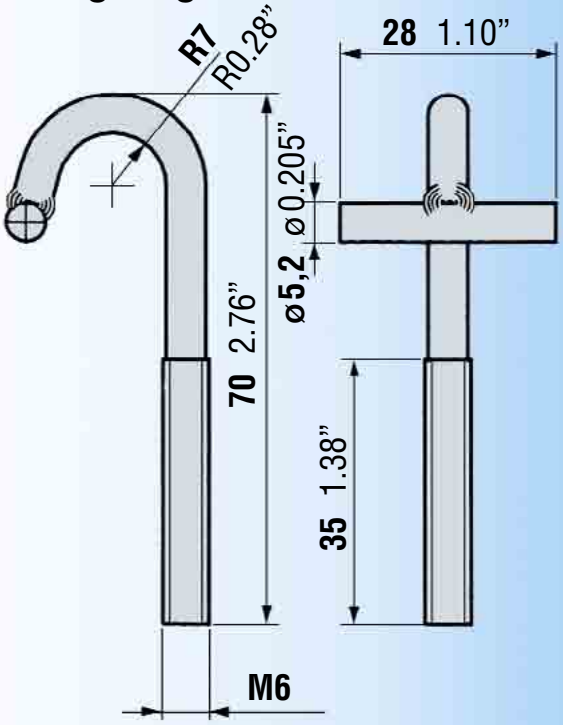

702 TL

L = 98 – 112 3.86”–4.41”

702 L

L = 107 – 122 4.21”–4.80”

702 HL

L = 98 – 112 3.86”–4.41”

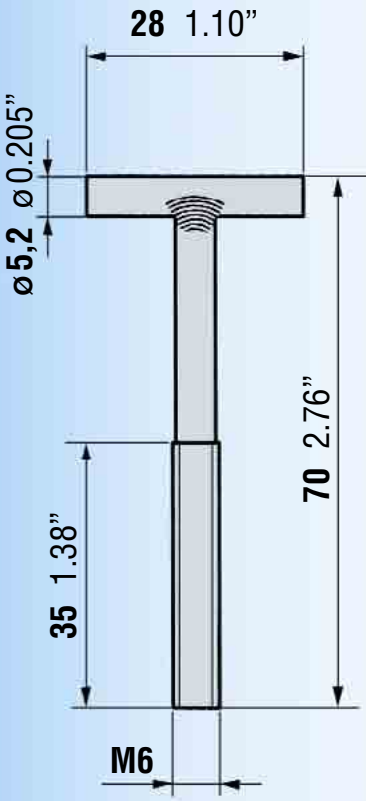

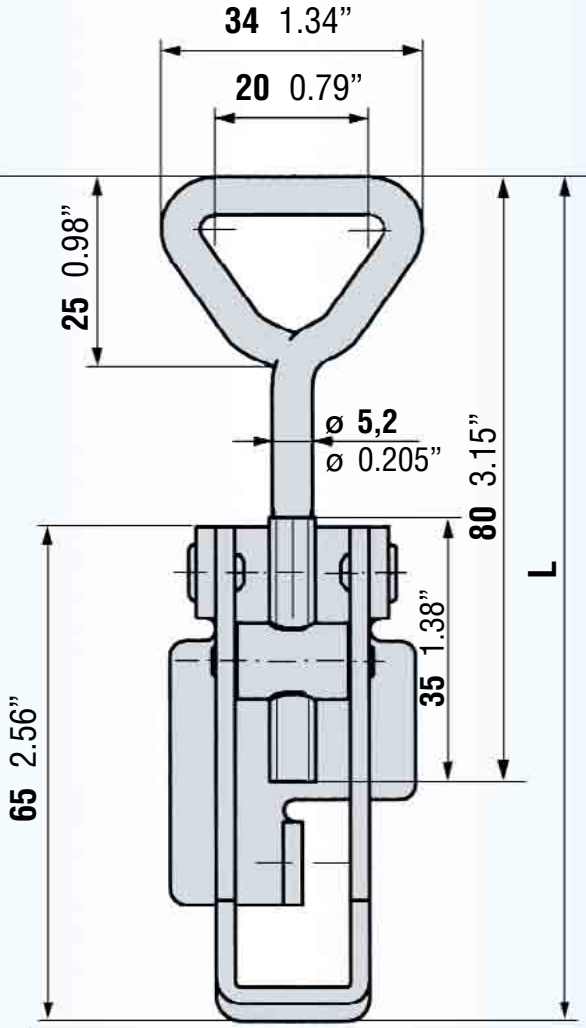

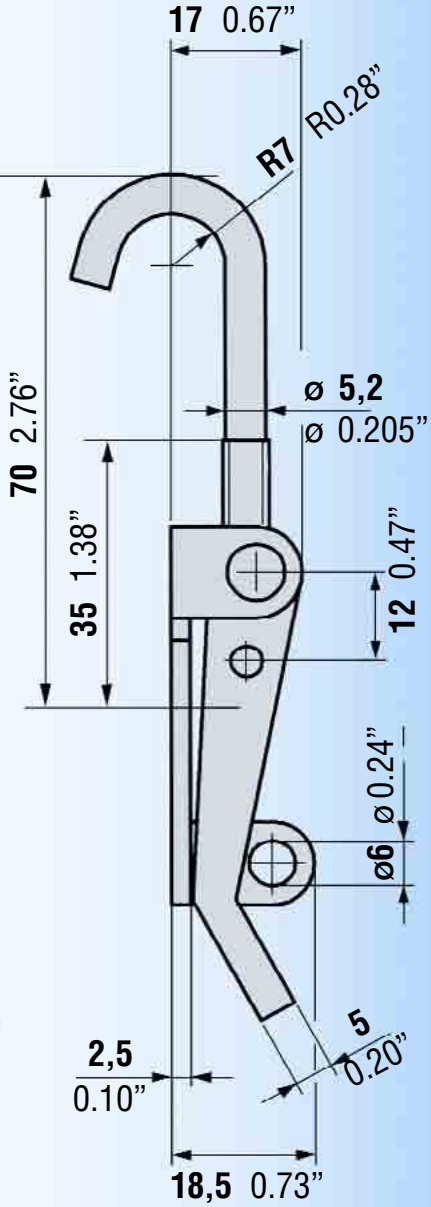

702 L

Haken m. schwenkbarem Oberteil

L = 108 – 122 4.25”–4.80”

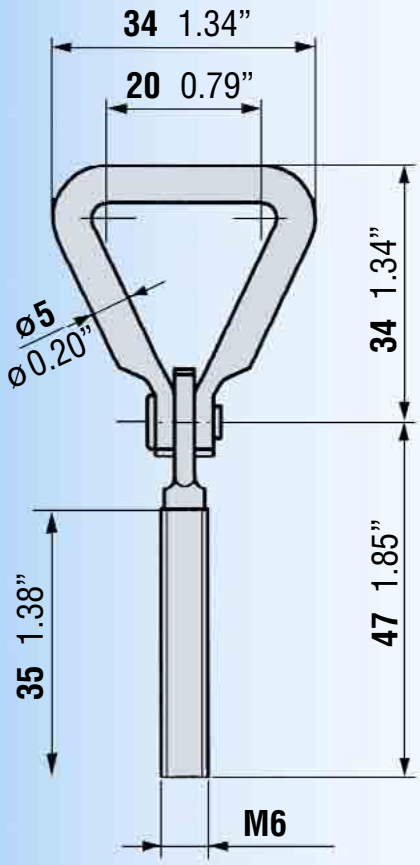

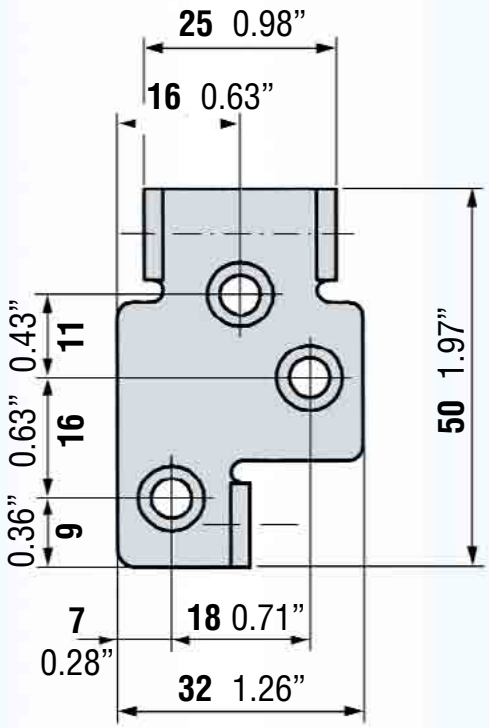

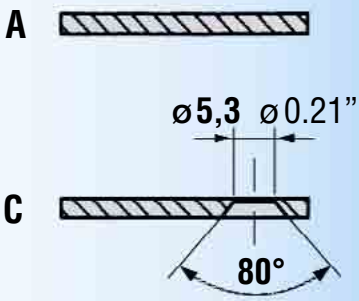

702 T

L = 94 – 112 3.46” – 4.41”

702

L = 98 – 122 3.86” – 4.80”

702 H

L = 88 – 112 3.46” – 4.41”

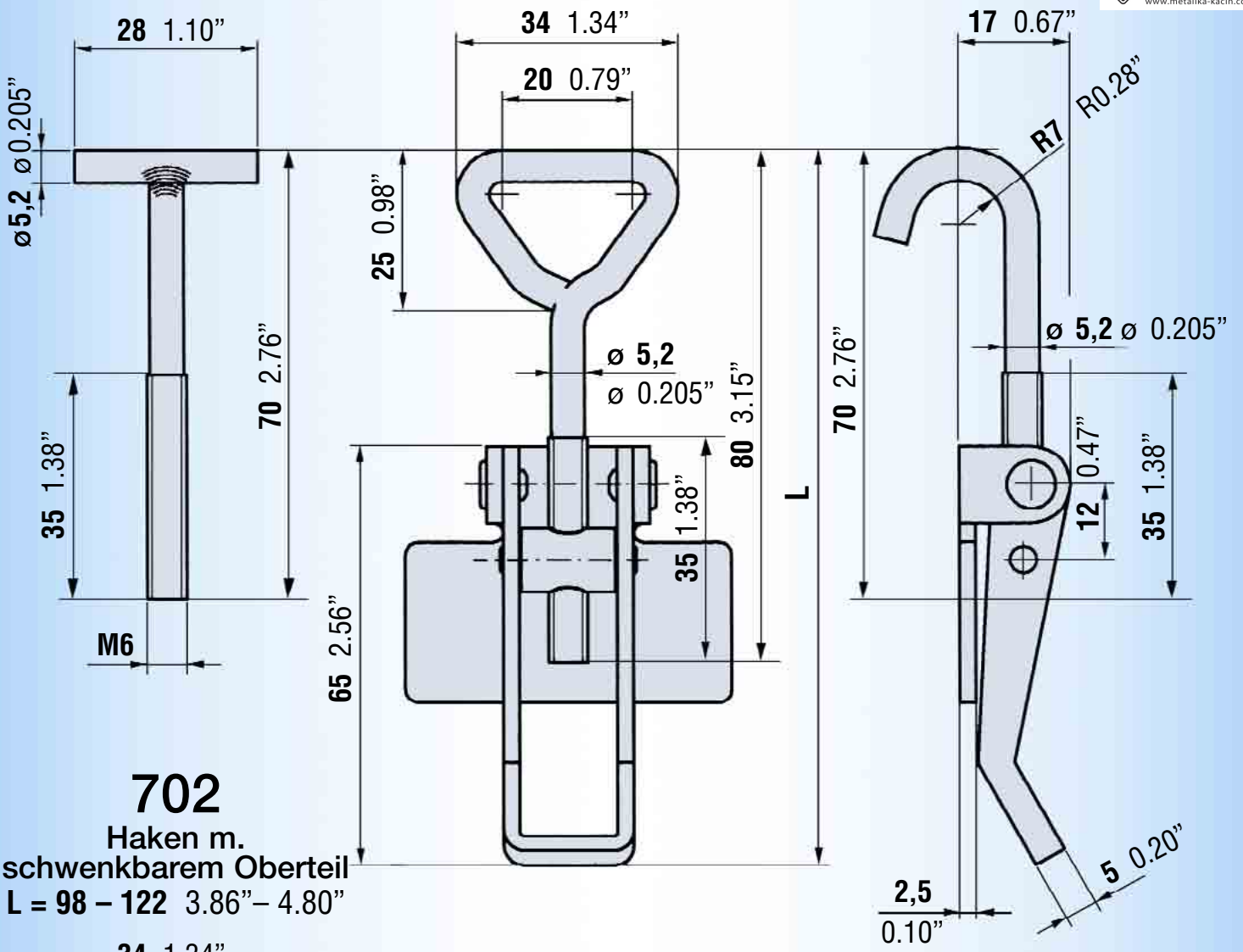

702

Haken m. schwenkbarem Oberteil

L = 98 – 122 3.86” – 4.80”

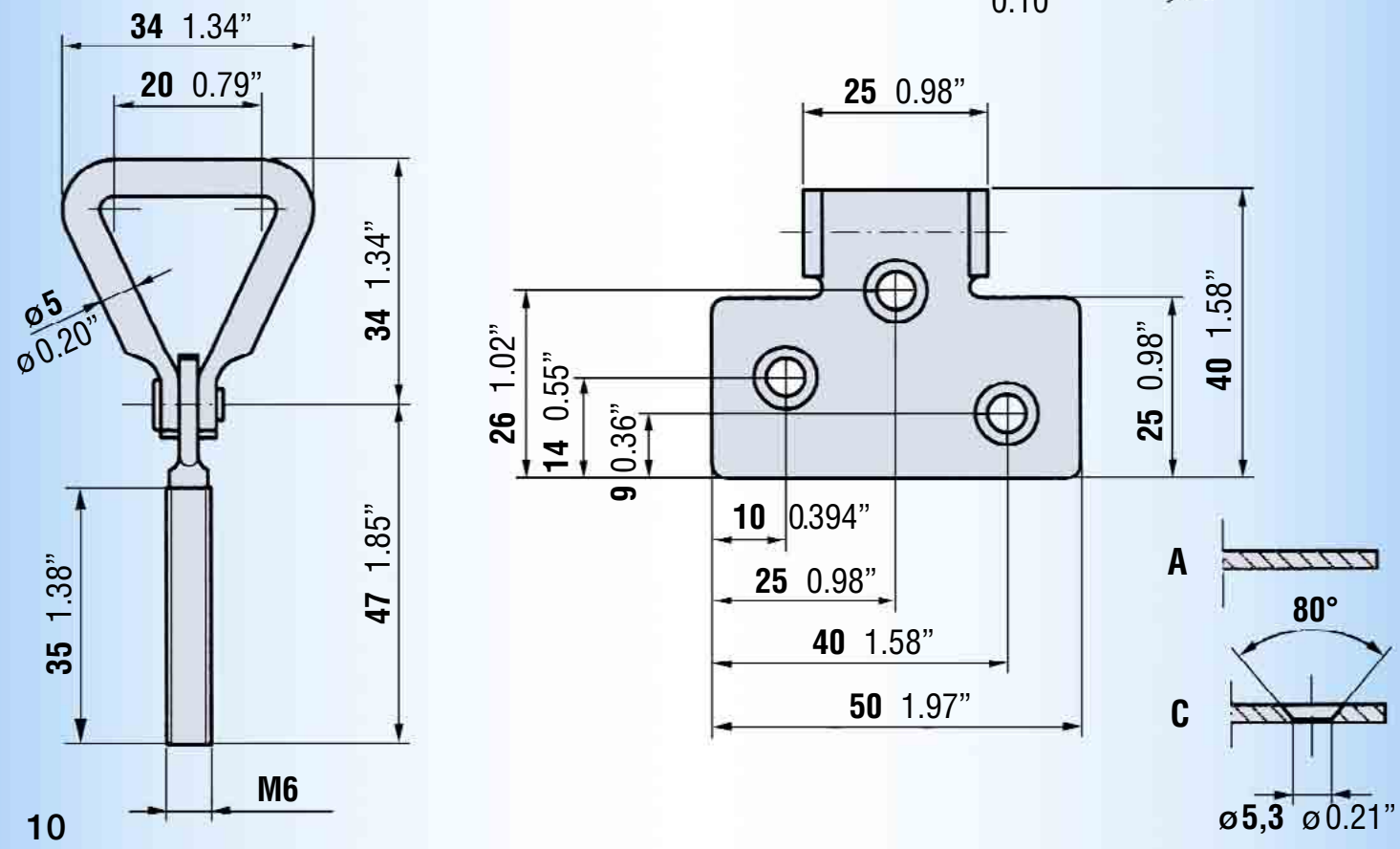

Schließhaken
16, 19, 22 or 41

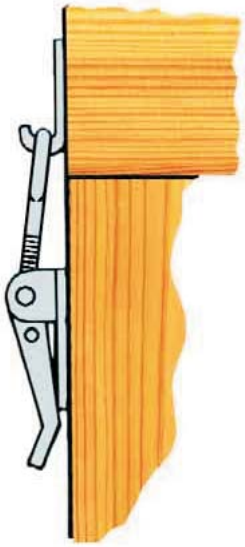

Schließhaken
17 or 20

Schließhaken
siehe Seite 31–36

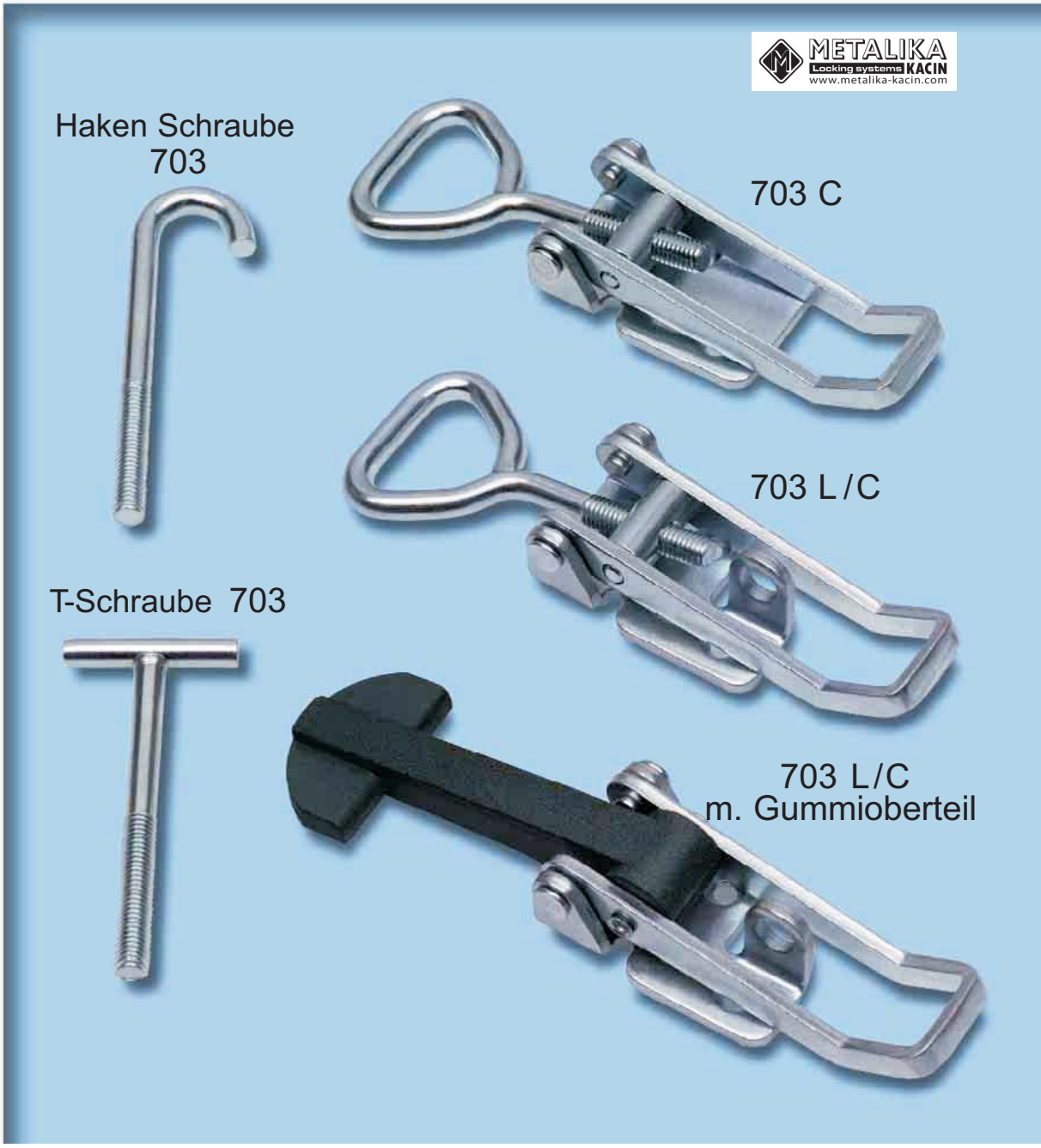

Kombinations-möglichkeiten		Belastung			Gewicht	
Verschluss	Haken	max. empfohlene Belastung			Gewicht per 100 St.	
		Kp	N	Pounds	Kilo	Pounds
703 L/C	20, 22, 41	500	4905	1101	20,1	44.3
703 TL/C	16, 17	500	4905	1101	18,8	41.4
703 HL/C	–	150	1471	330	18,9	41.6
703 C	20, 22, 41	500	4905	1101	20,8	45.8
703 T/C	16, 17	500	4905	1101	19,4	42.7
703 H/C	–	150	1471	330	19,5	43.0
703 L/C Gummi	16				16,7	36.8
703 C Gummi	16				17,4	38.3

703 T

L = 135 – 163 5.31”–6.42”

703

L = 145 – 164 5.71”–6.46”

703 H

L = 145 – 174 5.71”–6.85”

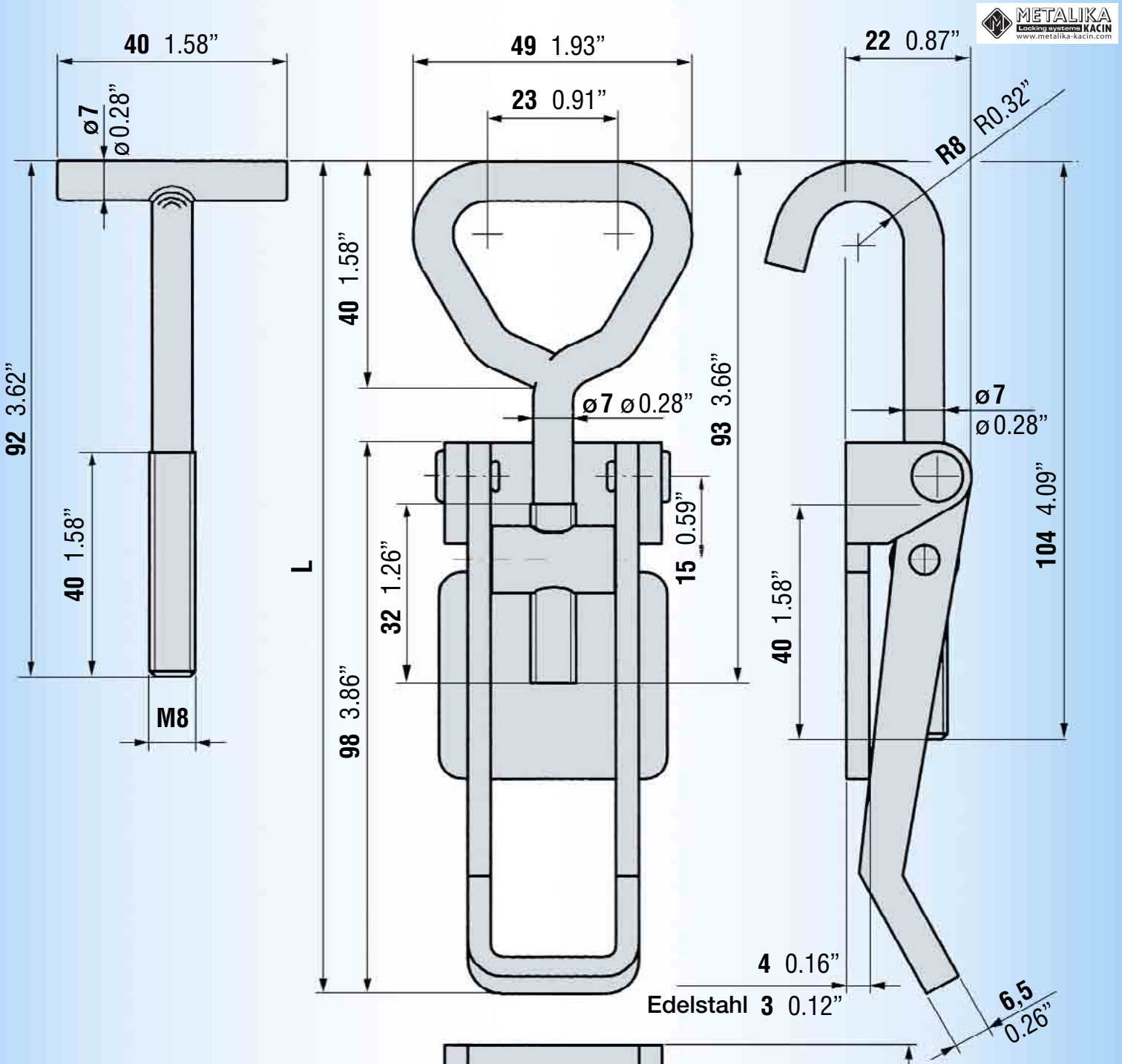

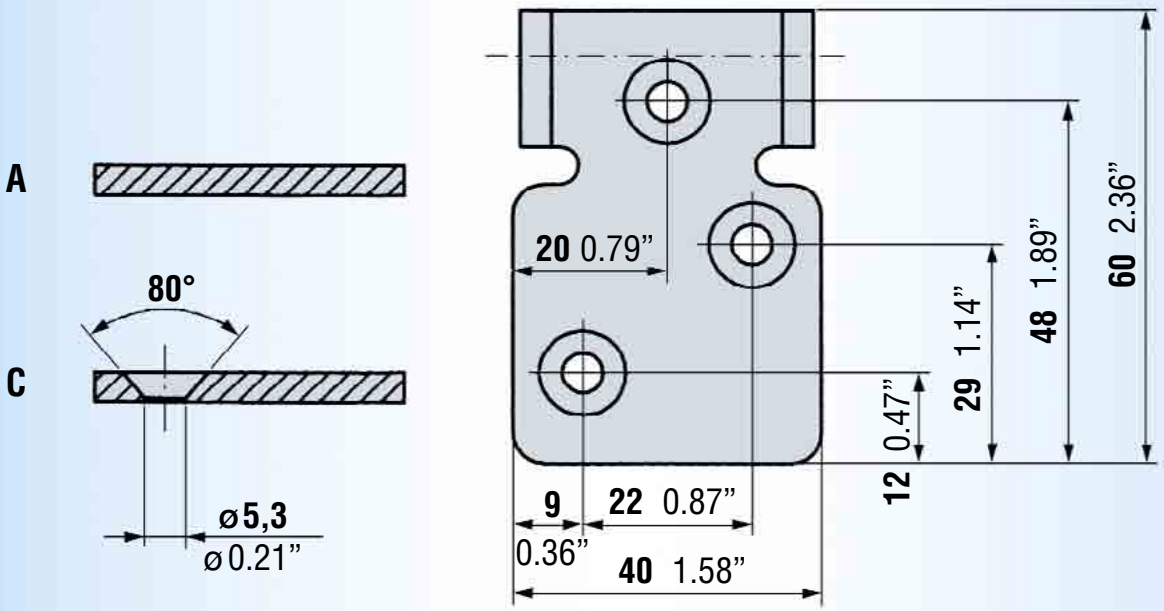

703 TL

L = 149 – 164 5.87” – 6.46”

703 L

L = 149 – 164 5.87” – 6.46”

703 HL

L = 159 – 174 6.26” – 6.85”

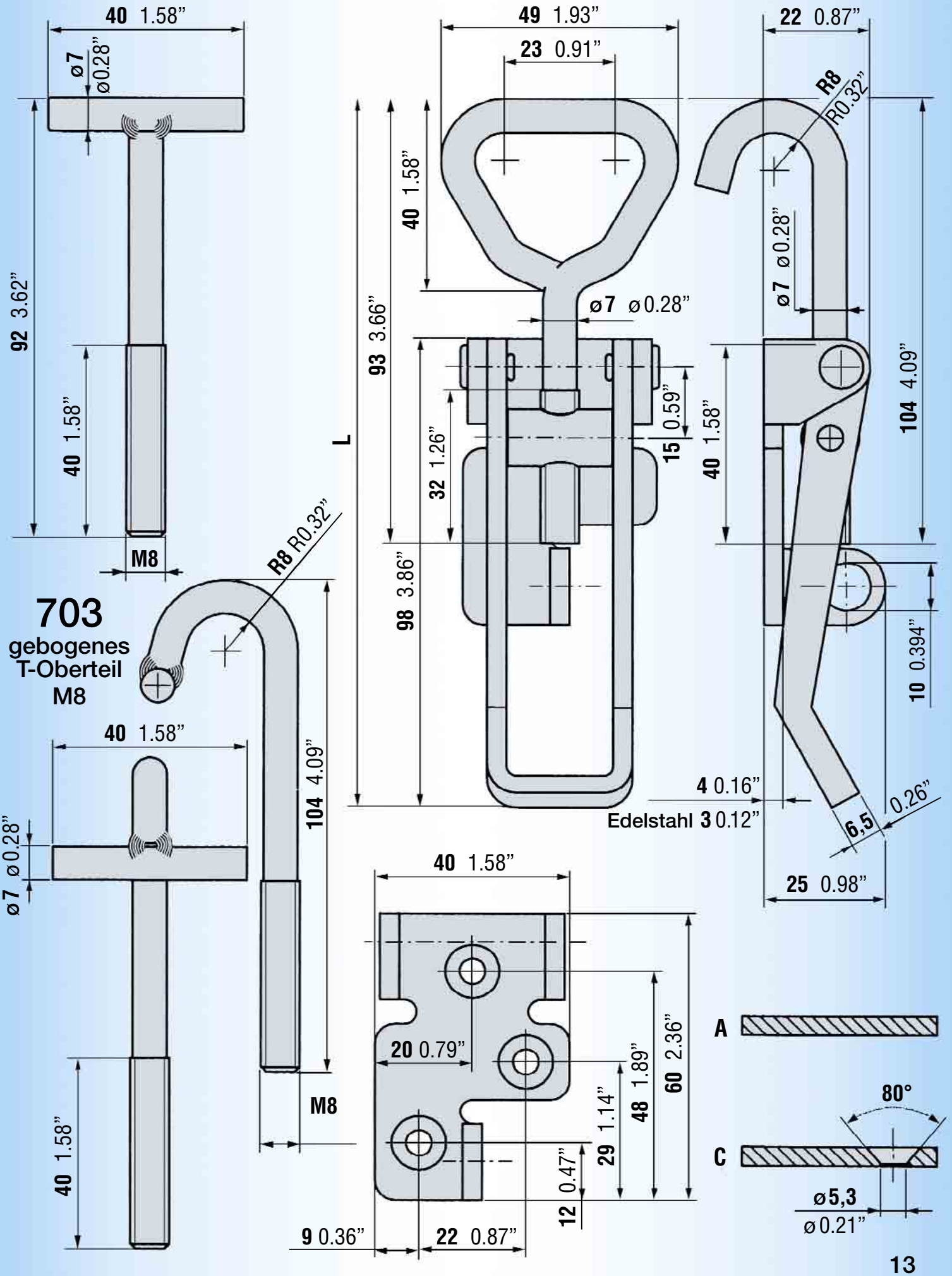

703 m. Gummioberteil

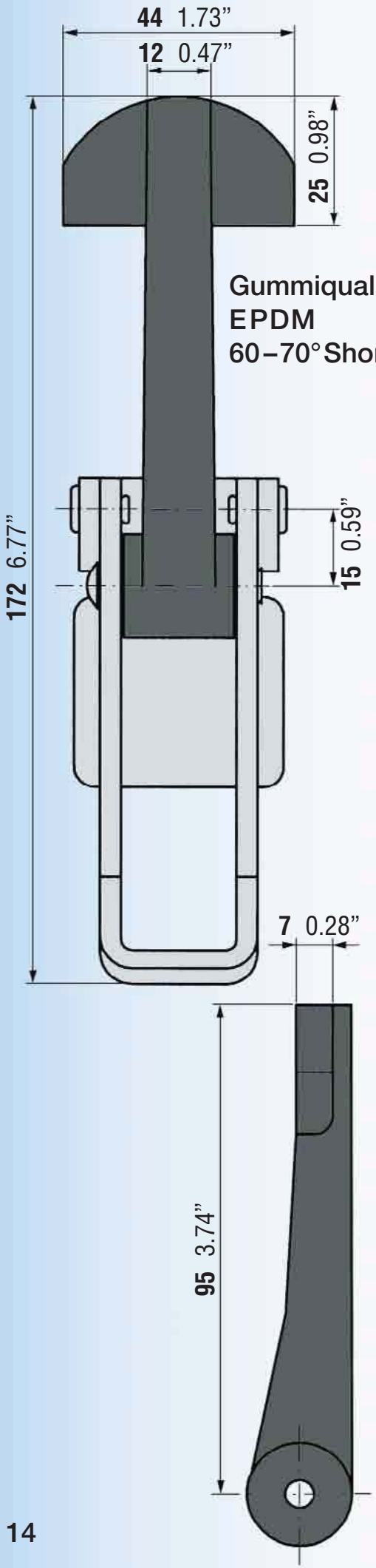

704 L/C With safety catch

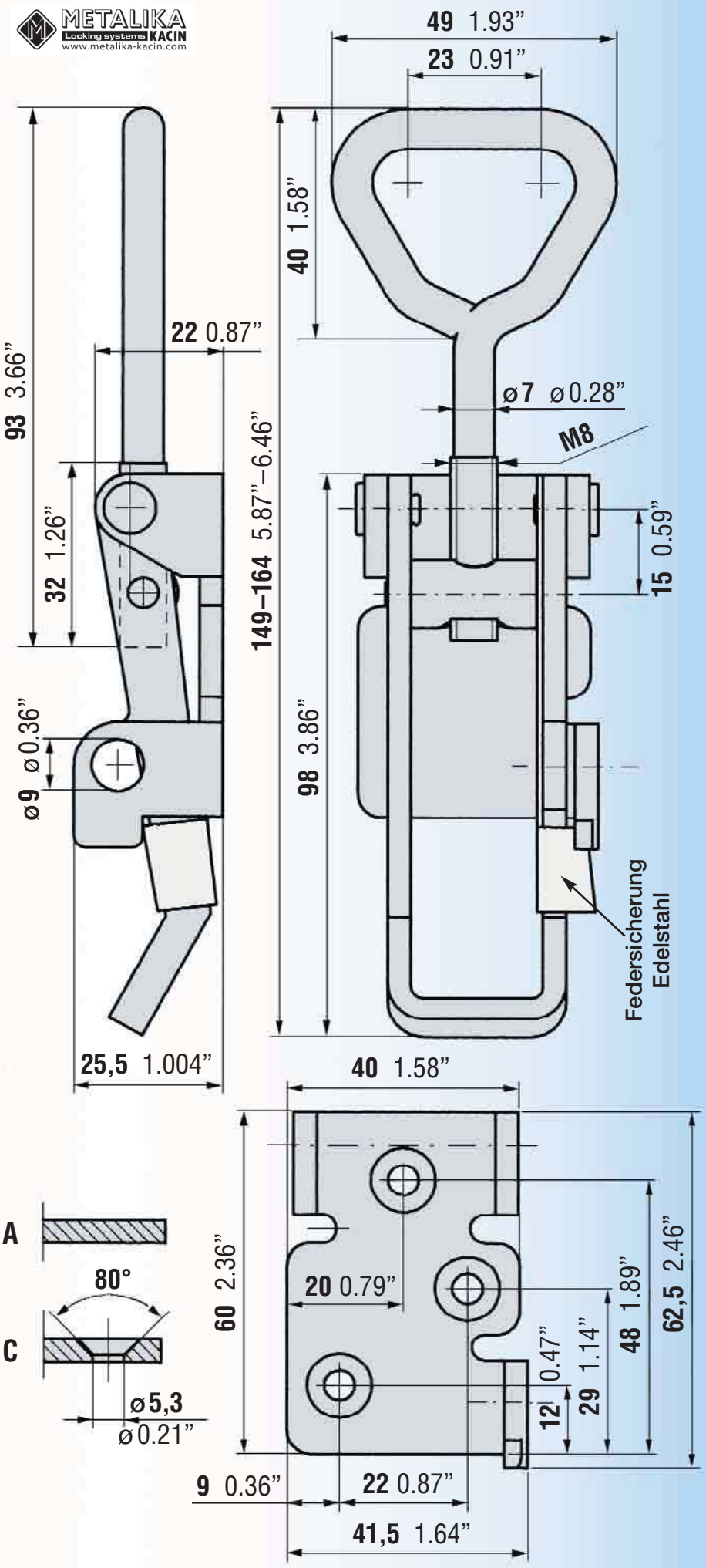

Innovationen

41 C
schwarz chromatiert

703 L/C, schwarz chromatiert
m. selbstsicherndem Oberteil
und Federsicherung
zum Patent angemeldet

703 L/C, verzinkt,
m. selbstsicherndem Oberteil
zum Patent angemeldet

703 L/C, verzinkt,
m. Kunststoff überzogenem
Spannhebel
eingetragenes Design

Schwere Ausführung

804 TL/C
eingetragenes Design

Belastung 1600 Kp
16000 N
3500 Pound

42 C

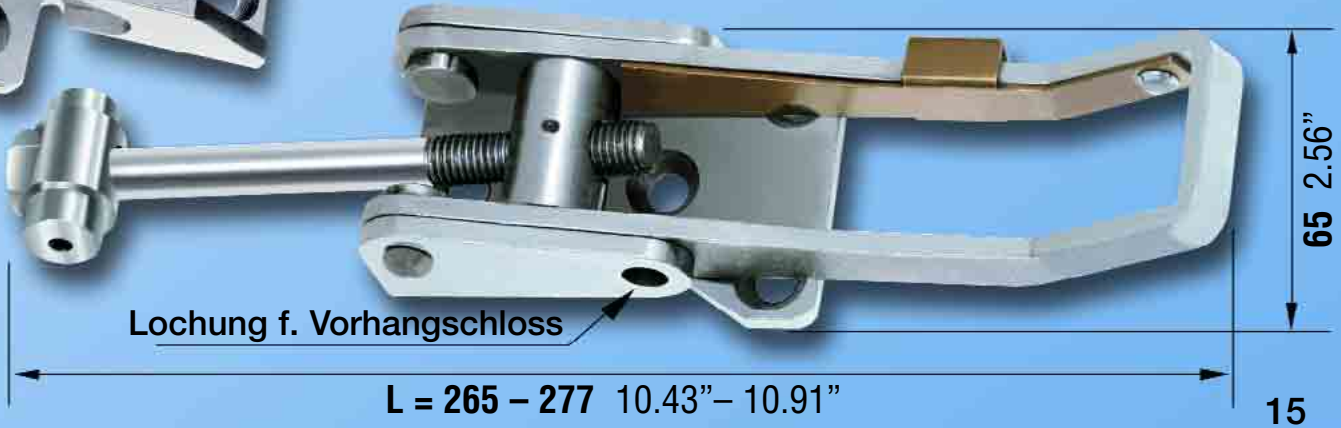

Serie 900

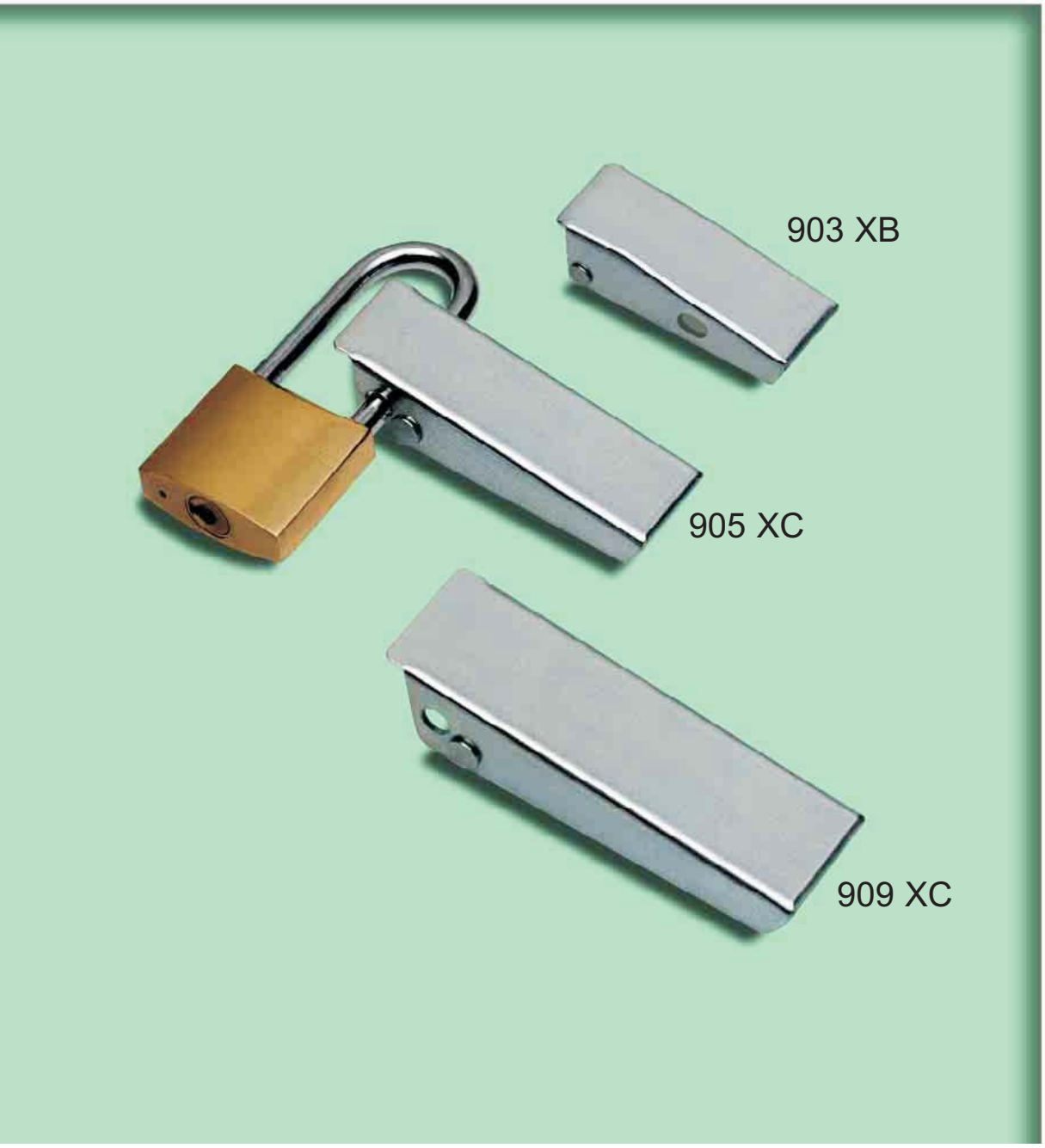

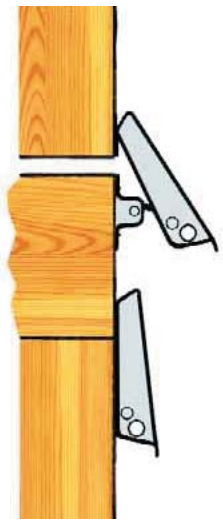

Schließhaken
94, 95 or 99

Schließhaken
siehe Seite 31–36

Kombinations-möglichkeiten		Belastung			Gewicht	
Verschluss	Haken	max. empfohlene Belastung			Gewicht per 100 St.	
		Kp	N	Pounds	Kilo	Pounds
903 XB	94	75	736	165	4,9	10.8
905 XC	95	100	981	220	7,6	16.7
909 XC	99	125	1226	275	12,3	27.1

903 XB

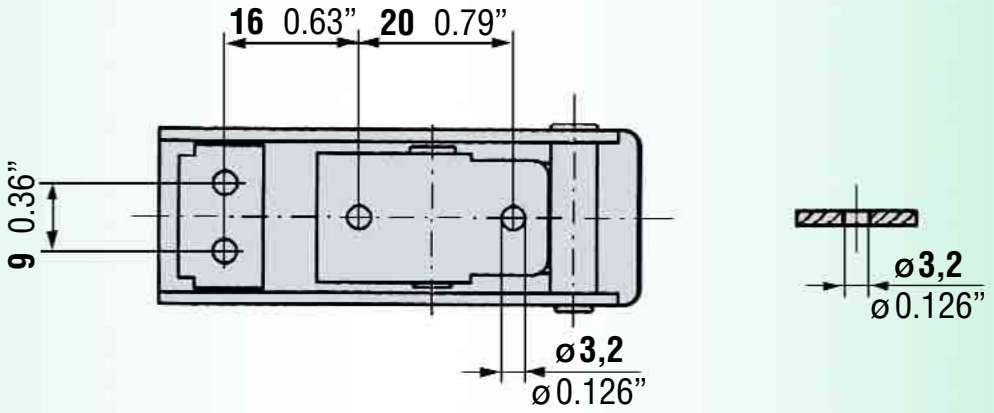

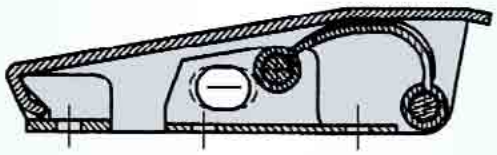

A–A

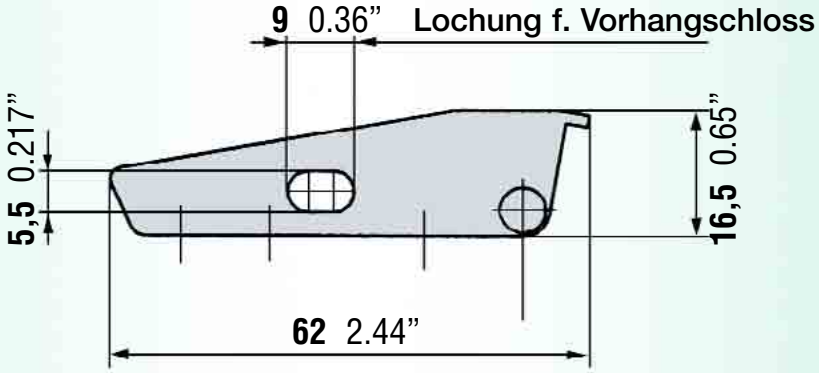

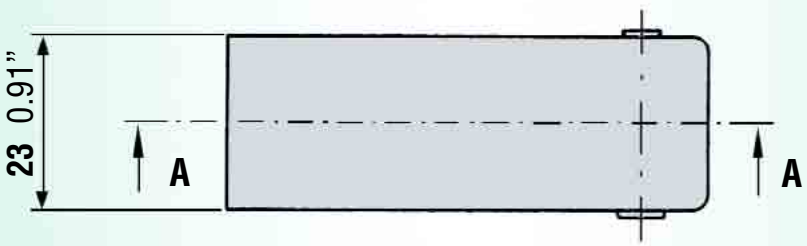

Stärke **1,5** 0.06”

905 XC

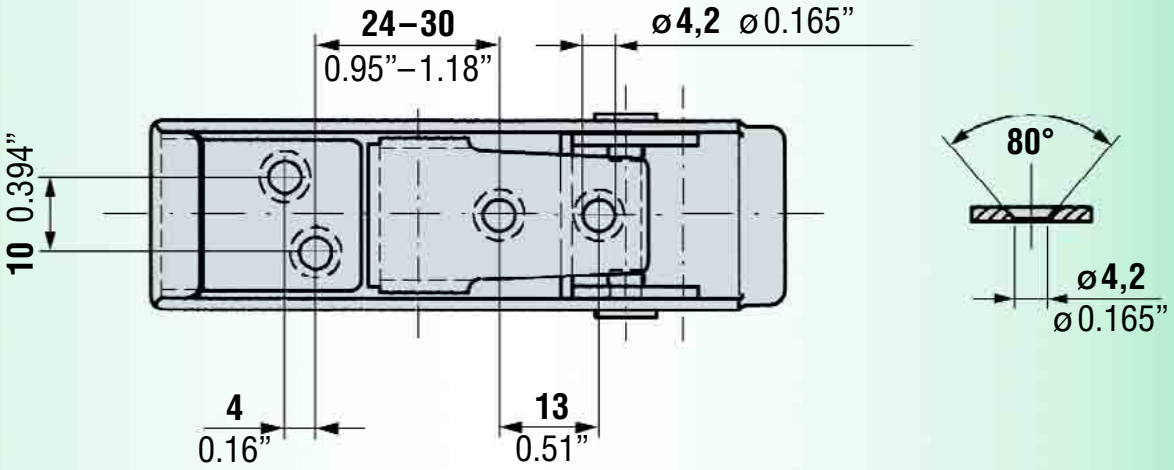

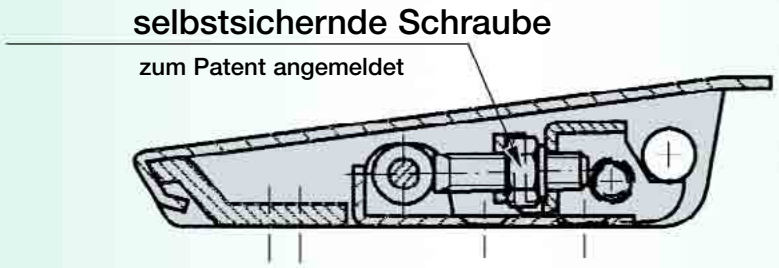

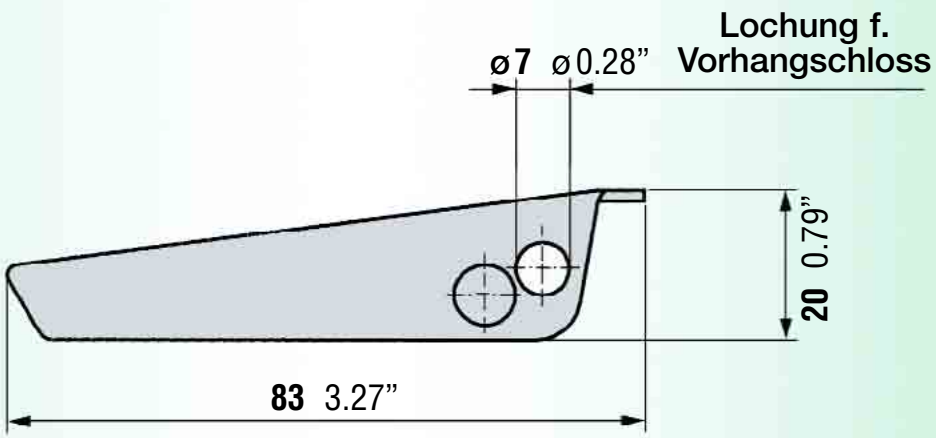

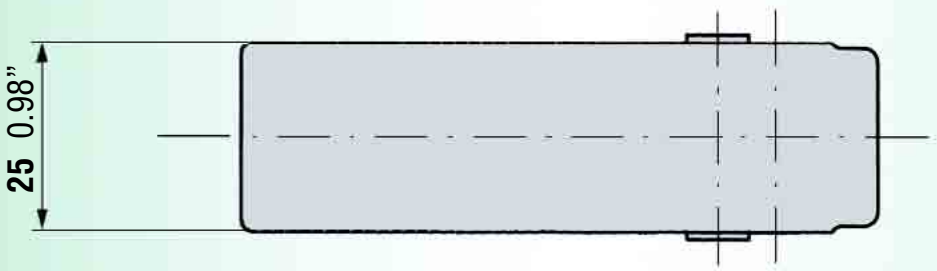

Stärke 1,5 0.06”

909 XC

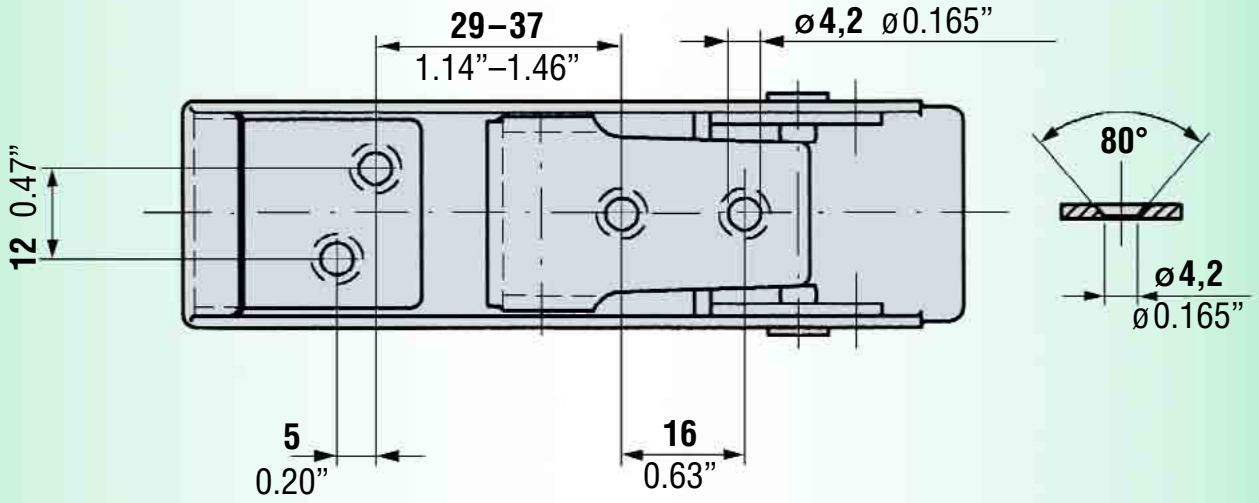

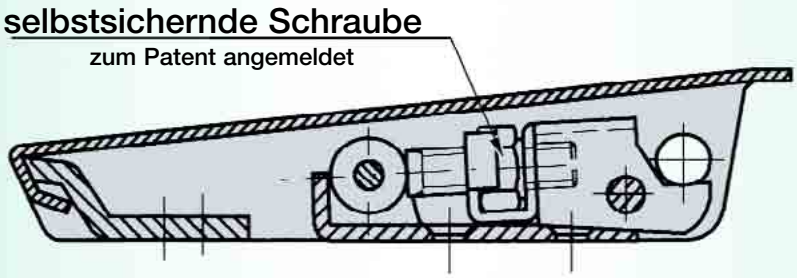

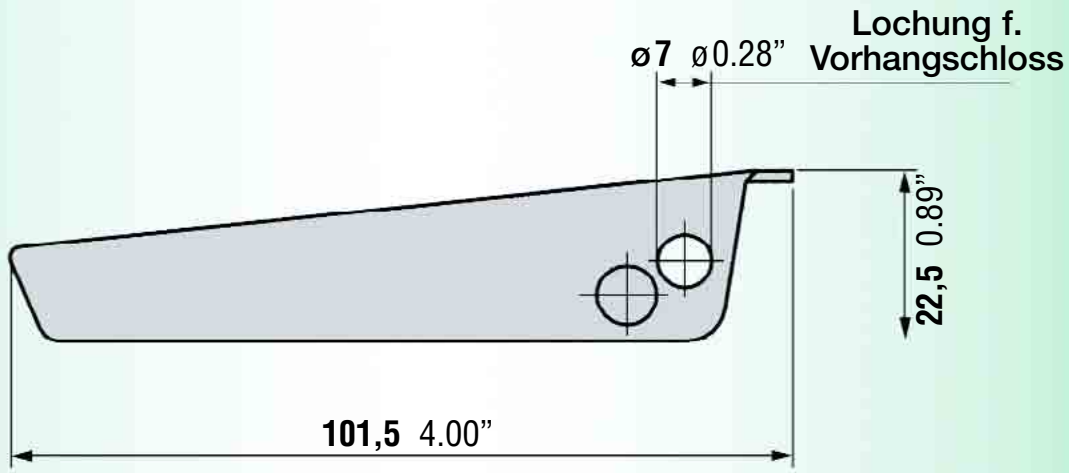

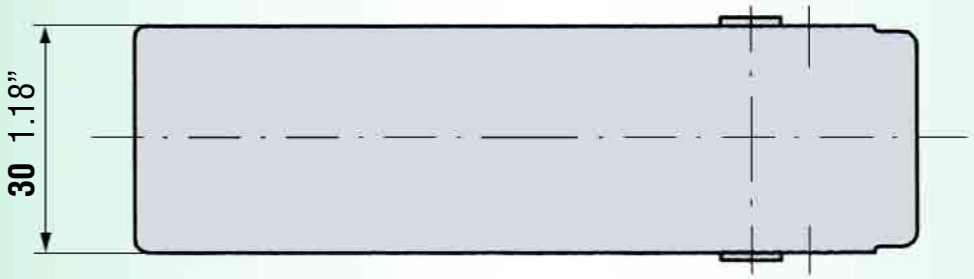

Stärke 1,5 0.06”

Pulverbeschichtet

Schließhaken
22, 31 or 41

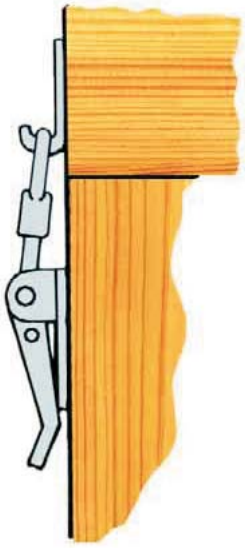

Schließhaken
10 or 20

Schließhaken
siehe Seite 31–36

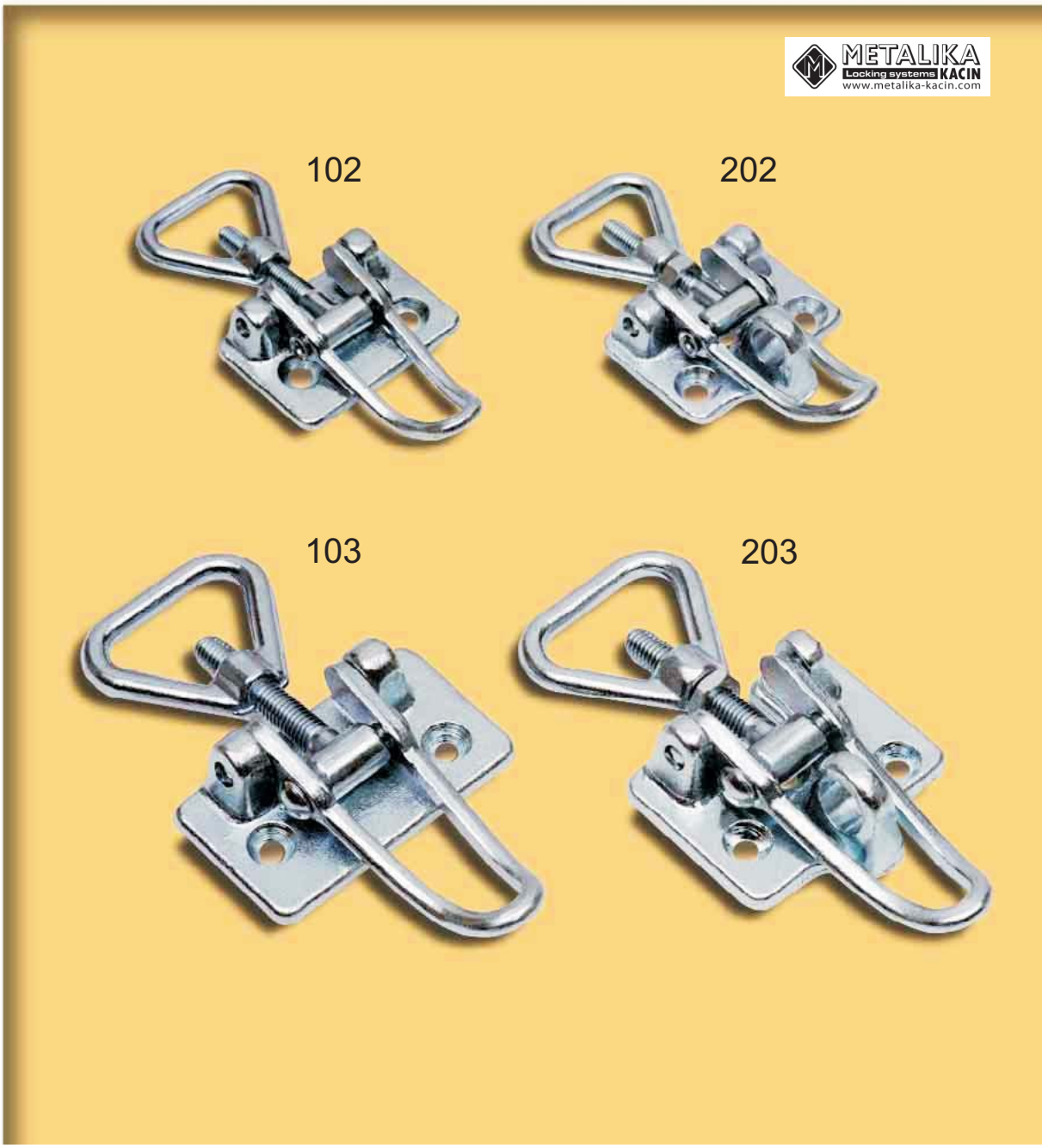

Kombinations-möglichkeiten		Belastung			Gewicht	
Verschluss	Haken	max. empfohlene Belastung			Gewicht per 100 St.	
		Kp	N	Pounds	Kilo	Pounds
102	10, 31	300	2943	660	10,2	22.5
103	20, 22, 41	500	4905	1101	21,2	46.7
202	10, 31	300	2943	660	11,8	26.0
203	20, 22, 41	500	4905	1101	23,0	50.7

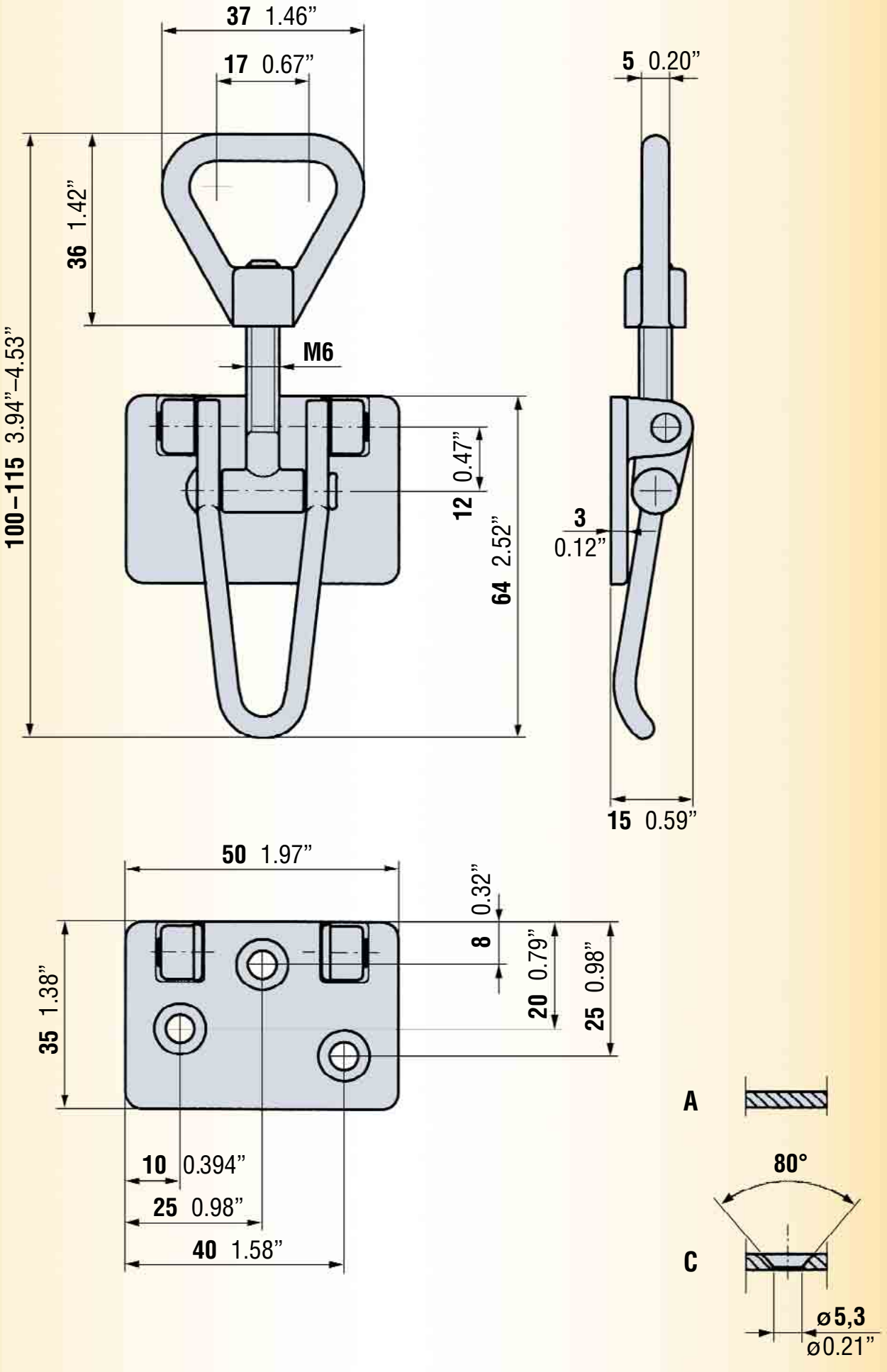
37 1.46”
17 0.67”
36 1.42”
100–115 3.94”–4.53”
M6
12 0.47”
64 2.52”
5 0.20”
3
0.12”
15 0.59”
50 1.97”
8 0.32”
20 0.79”
25 0.98”
35 1.38”
10 0.394”
25 0.98”
40 1.58”
A
80°
C
ø5,3
ø0.21”

103

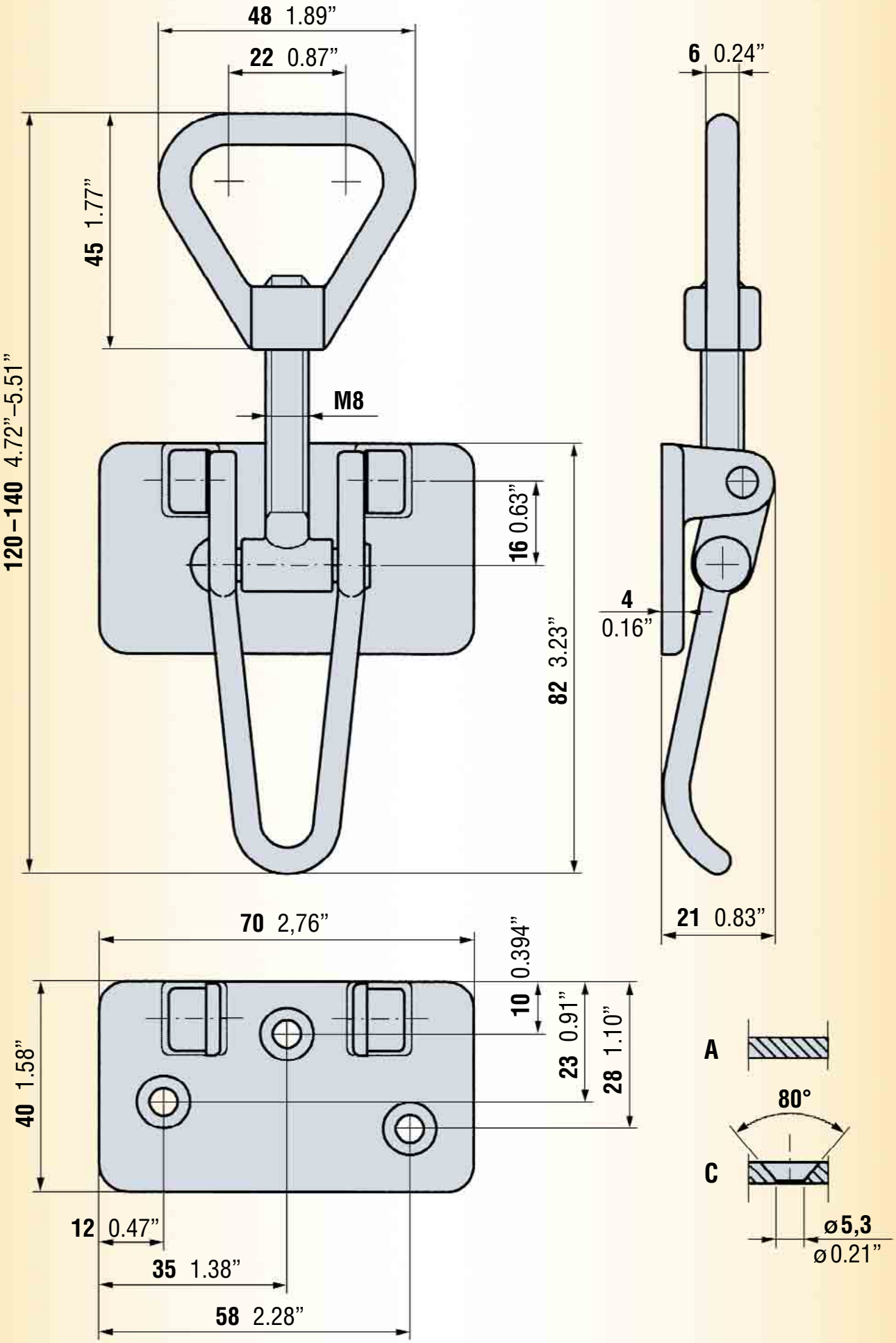
48 1.89”
22 0.87”
45 1.77”
120–140 4.72”–5.51”
M8
16 0.63”
82 3.23”
6 0.24”
4
0.16”
21 0.83”
70 2,76”
10 0.394”
23 0.91”
28 1.10”
40 1.58”
12 0.47”
35 1.38”
58 2.28”
A
80°
C
ø5,3
ø0.21”

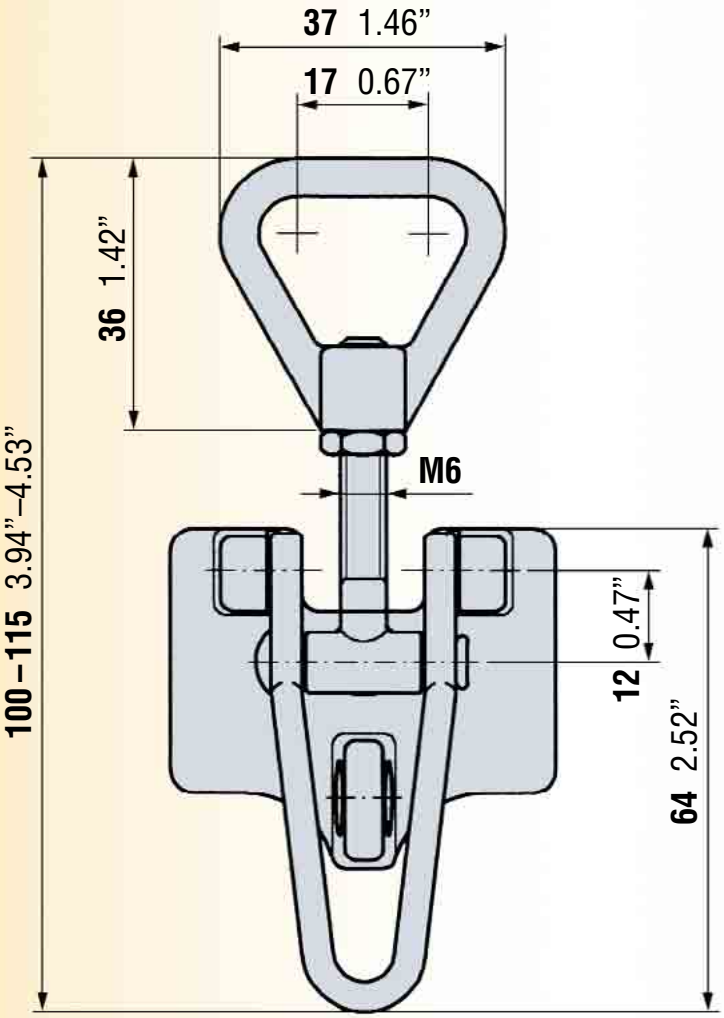
37 1.46”
17 0.67”
36 1.42”
100–115 3.94”–4.53”
M6
12 0.47”
64 2.52”

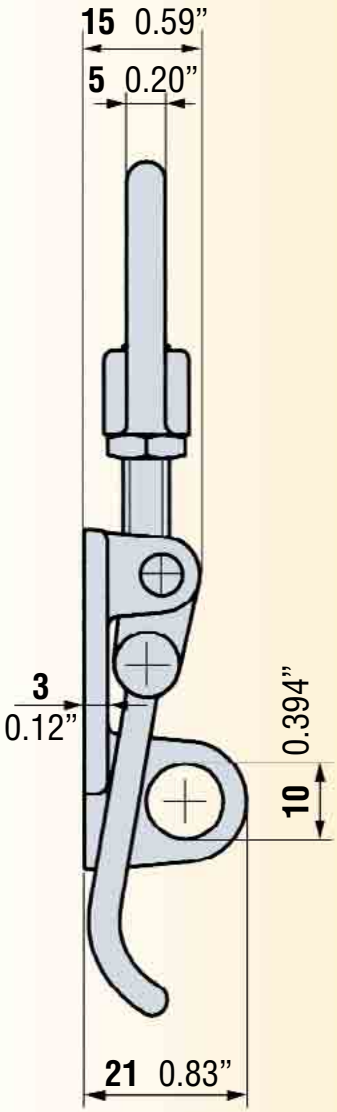
15 0.59”
5 0.20”
3
0.12”
10 0.394”
21 0.83”

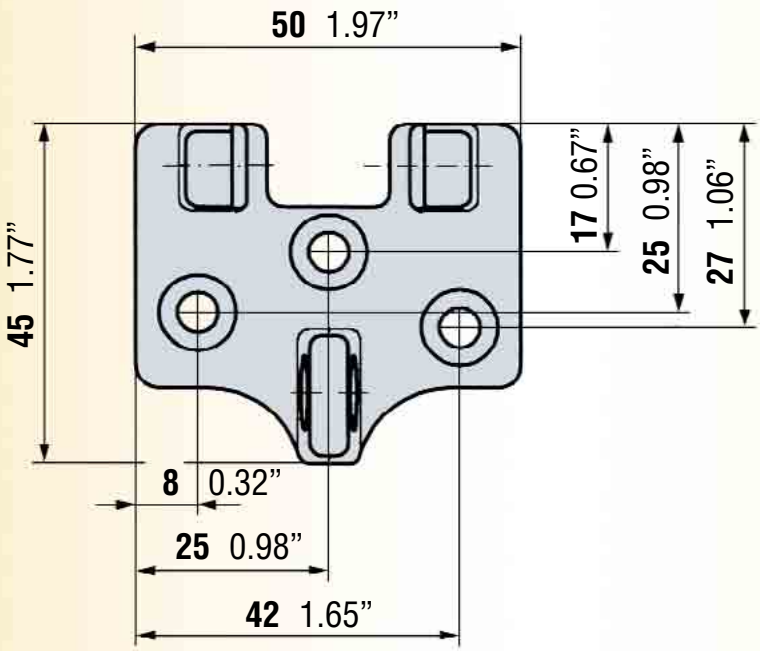
50 1.97”
45 1.77”
17 0.67”
25 0.98”
27 1.06”
8 0.32”
25 0.98”
42 1.65”

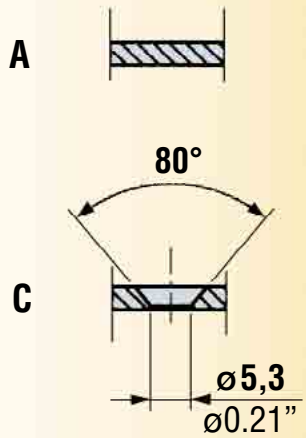
A
80°
C
ø5,3
ø0.21”

203

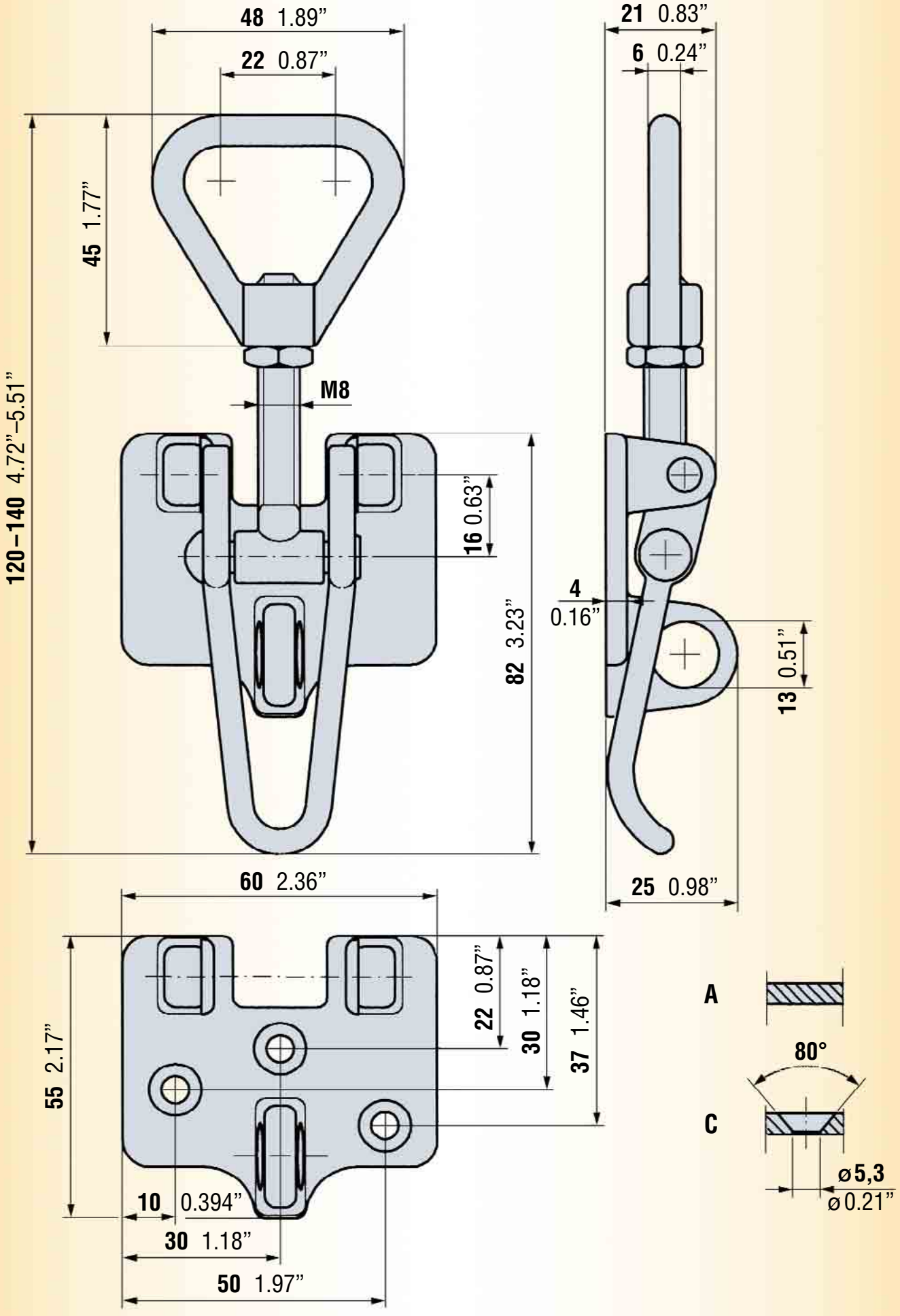
48 1.89”
22 0.87”
45 1.77”
120–140 4.72”–5.51”
M8
16 0.63”
82 3.23”
21 0.83”
6 0.24”
4
0.16”
13 0.51”
25 0.98”
60 2.36”
55 2.17”
22 0.87”
30 1.18”
37 1.46”
10 0.394”
30 1.18”
50 1.97”
A
80°
C
ø5,3
ø0.21”

Serie 400–500

Schließhaken
22 or 41

Schließhaken
20

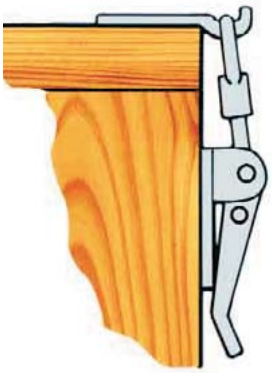

Schließhaken
siehe Seite 31–36

Kombinations-möglichkeiten		Belastung			Gewicht	
Verschluss	Haken	max. empfohlene Belastung			Gewicht per 100 St.	
		Kp	N	Pounds	Kilo	Pounds
403	20, 22, 41	600	5886	1321	25,6	56.4
404	20, 22, 41	600	5886	1321	23,4	51.5
503	20, 22, 41	500	4905	1101	23,2	51.1
504	20, 22, 41	500	4905	1101	20,0	44.1

403

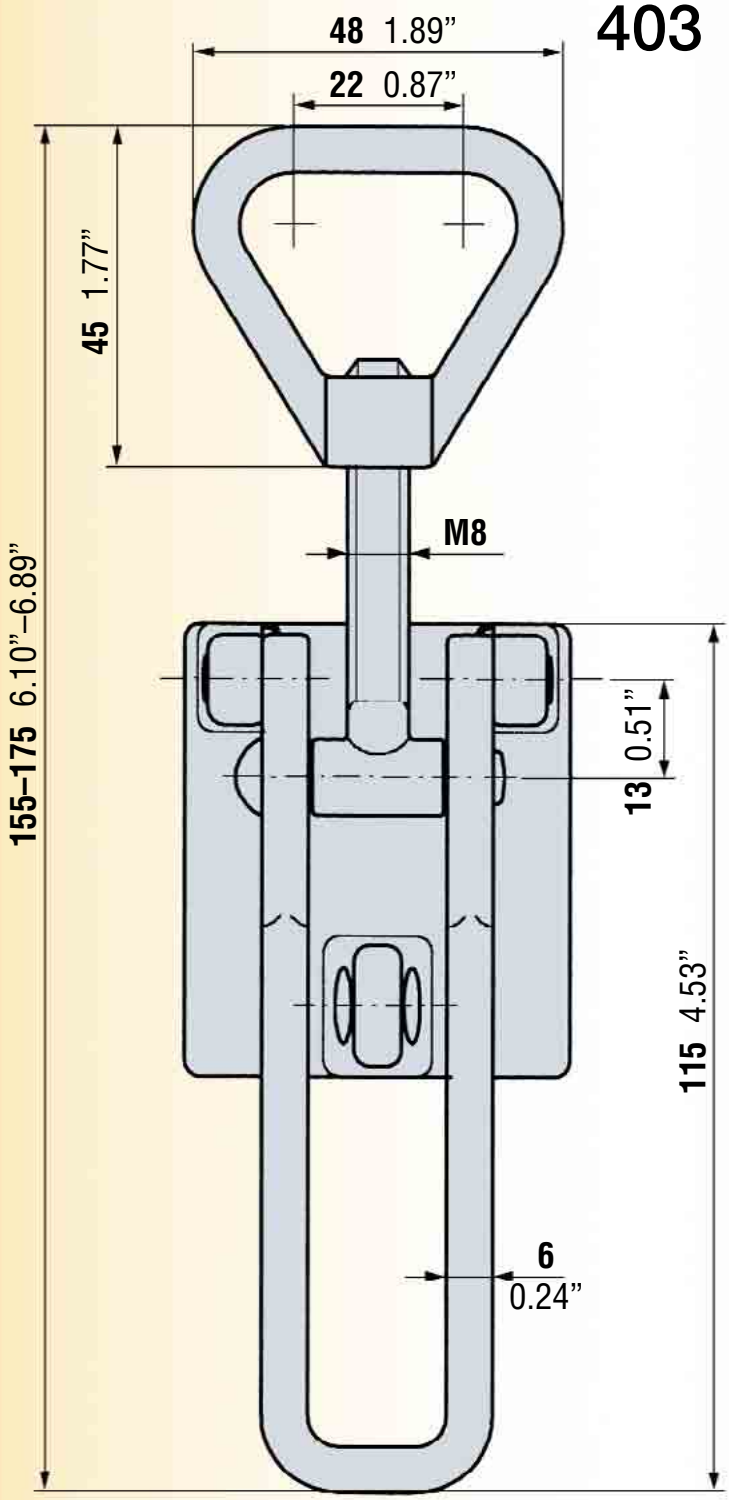
48 1.89”
22 0.87”
45 1.77”
155–175 6.10”–6.89”
M8
13 0.51”
115 4.53”
6
0.24”

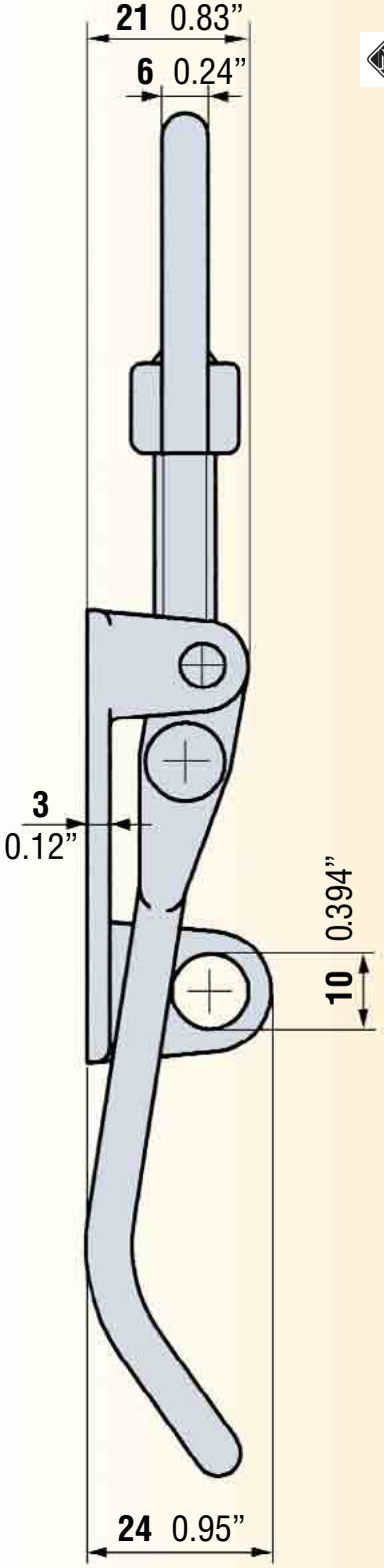
21 0.83”
6 0.24”
3
0.12”
10 0.394”
24 0.95”

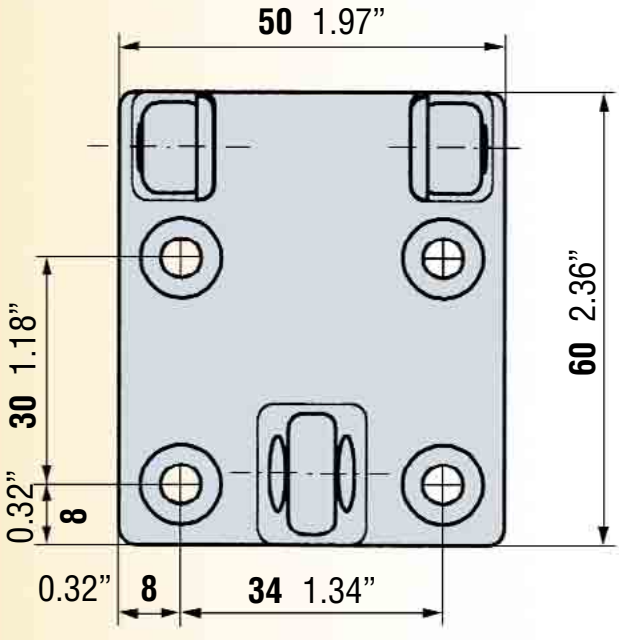
50 1.97”
60 2.36”
30 1.18”
0.32”
8
0.32”
8
34 1.34”

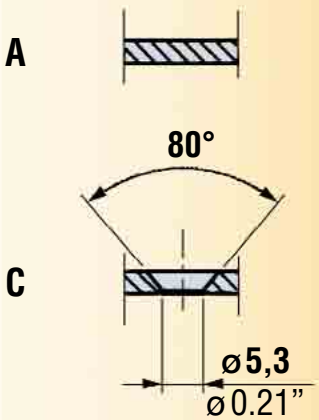
A
80°
C
ø5,3
ø0.21”

404

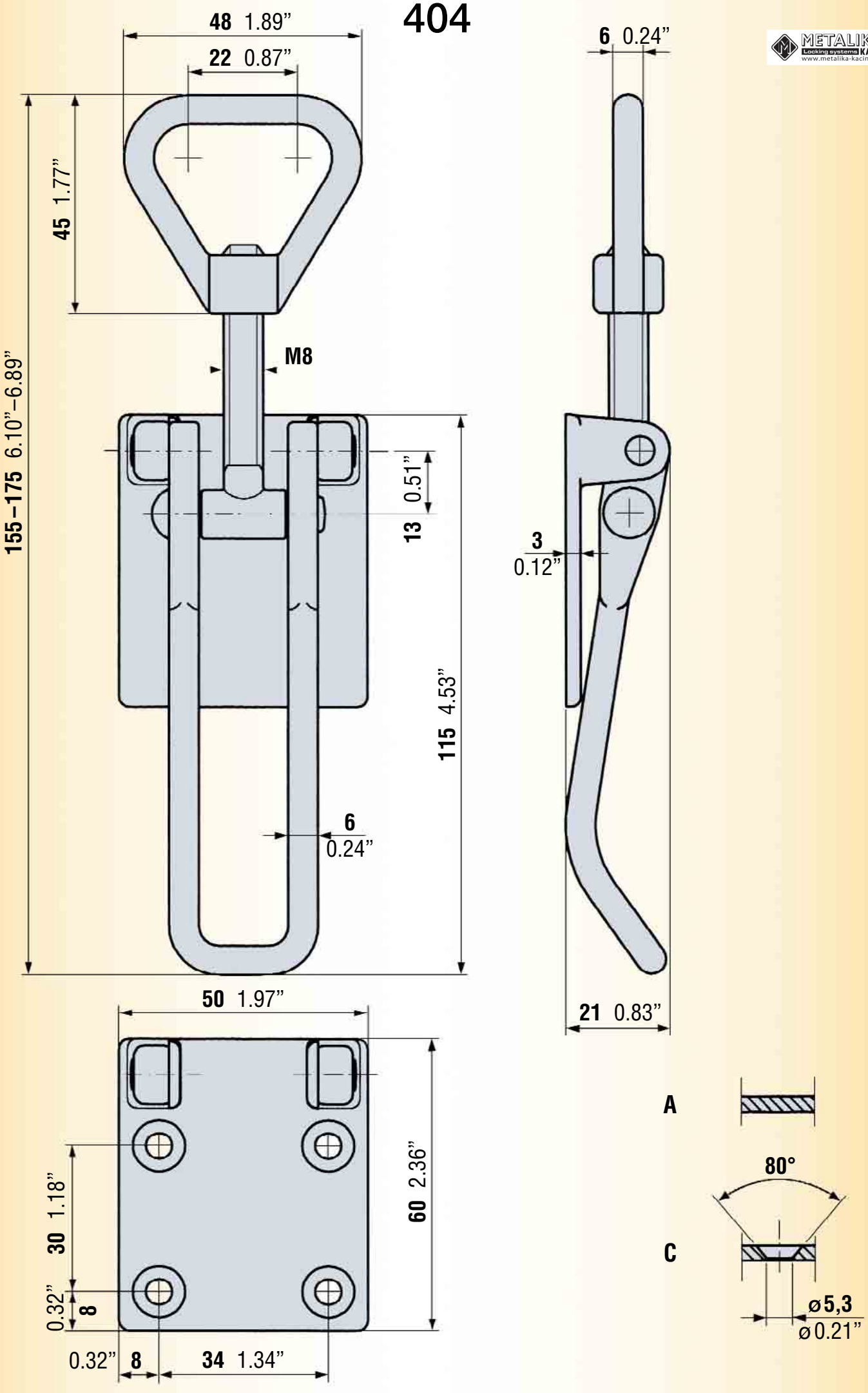
48 1.89”
22 0.87”
45 1.77”
155–175 6.10”–6.89”
M8
13 0.51”
115 4.53”
6 0.24”
6 0.24”
3 0.12”
21 0.83”
50 1.97”
60 2.36”
30 1.18”
0.32” 8
0.32” 8 34 1.34”
A
80°
C
ø5,3
ø 0.21”

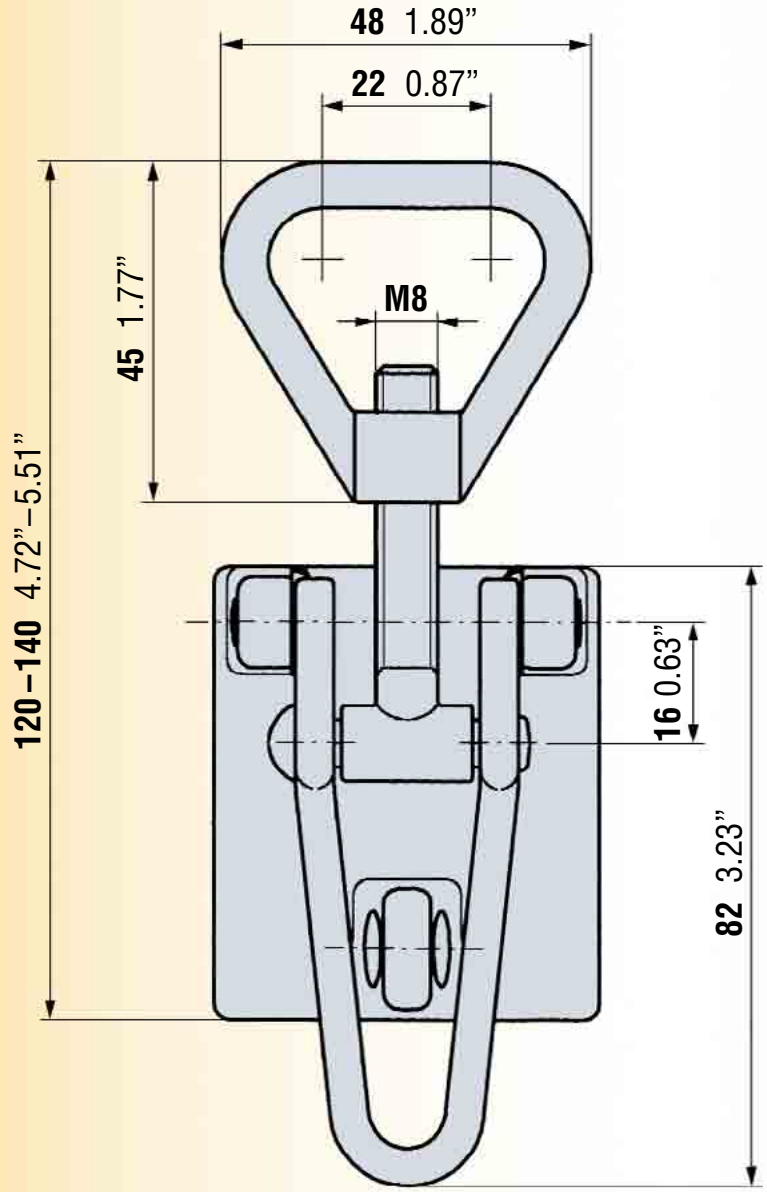
48 1.89”
22 0.87”
M8
45 1.77”
120–140 4.72”–5.51”
16 0.63”
82 3.23”

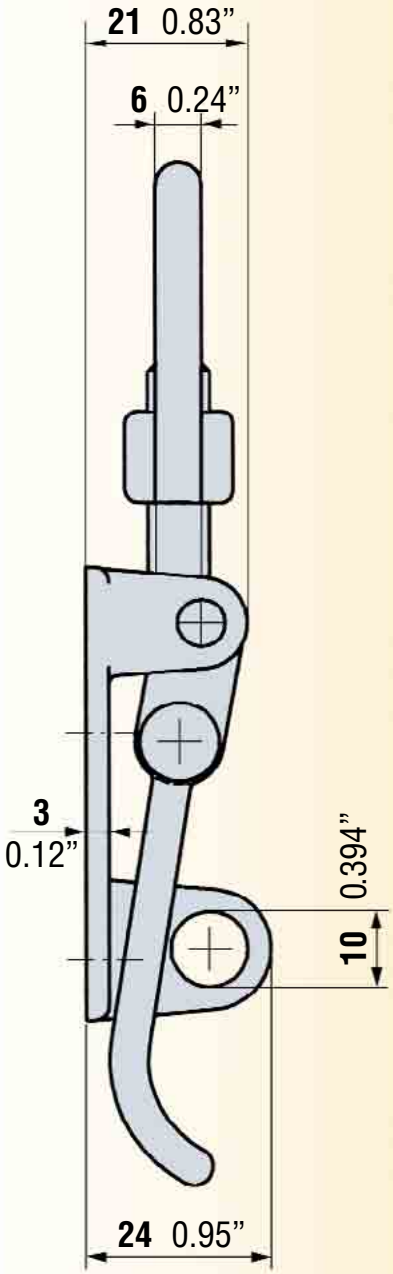
21 0.83”
6 0.24”
3
0.12”
0.394”
10
24 0.95”

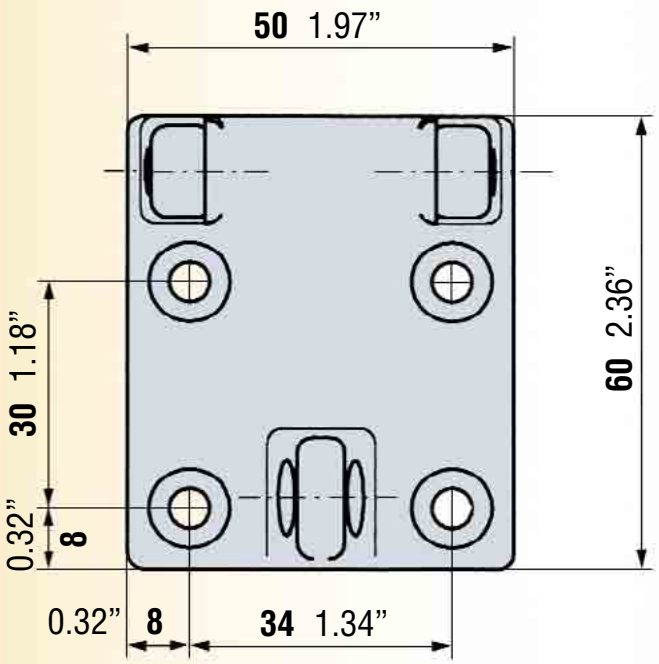
50 1.97”
60 2.36”
30 1.18”
0.32”
8
0.32”
8
34 1.34”

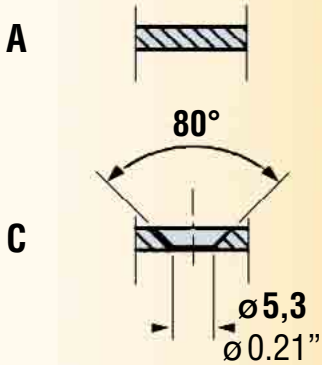
A
80°
C
ø5,3
ø0.21”

504

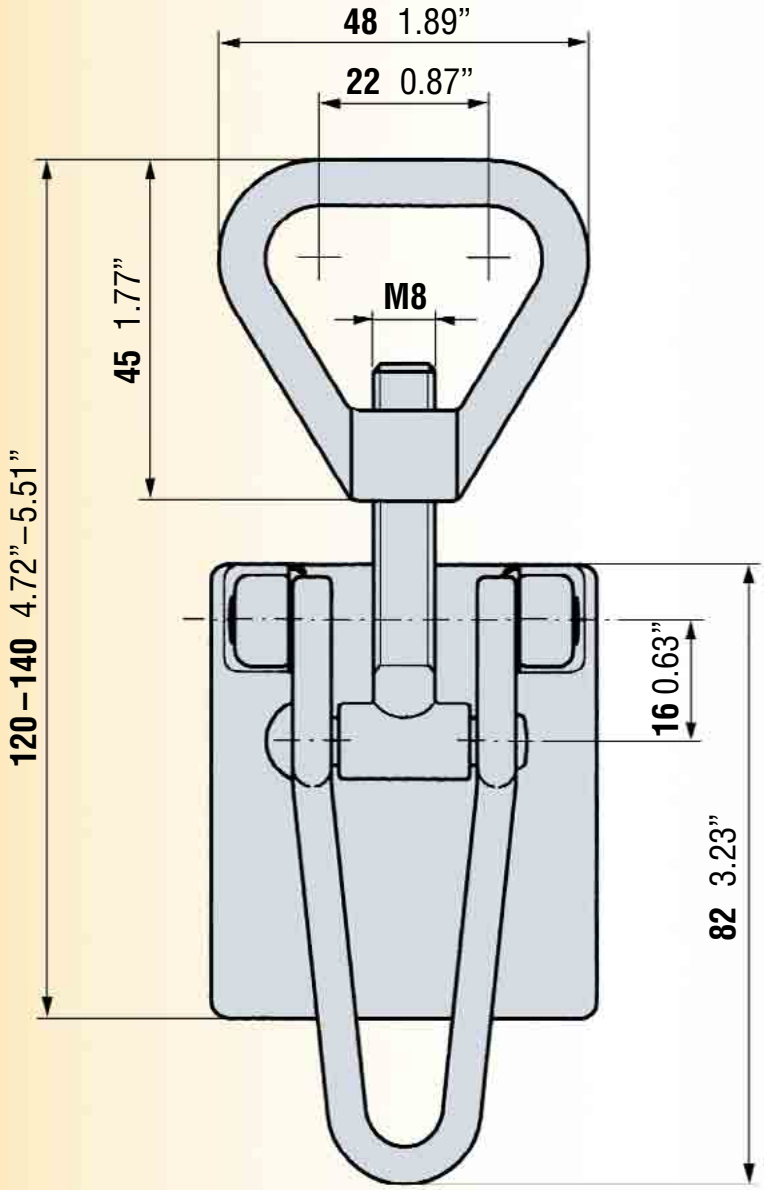
48 1.89”
22 0.87”
M8
45 1.77”
120–140 4.72”–5.51”
16 0.63”
82 3.23”

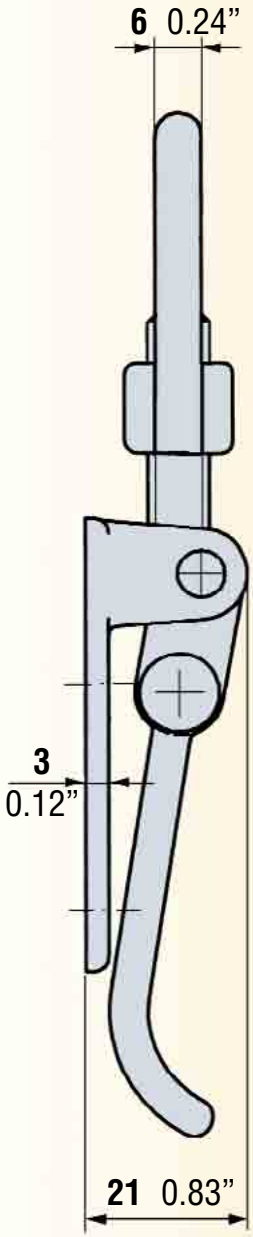
6 0.24”
3
0.12”
21 0.83”

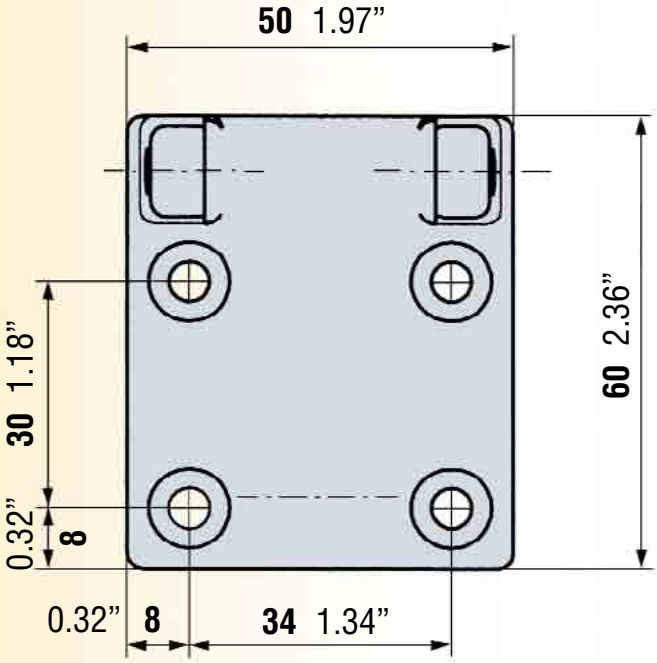
50 1.97”
60 2.36”
30 1.18”
0.32”
8
0.32”
8
34 1.34”

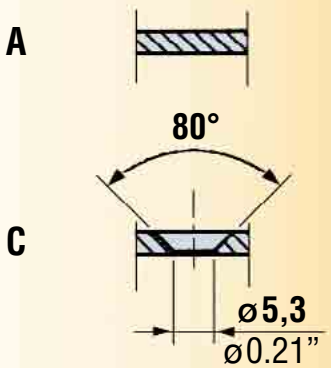
A
80°
C
ø5,3
ø0.21”

Schliesshaken

Gewicht per 100 St.																		
Schliess-haken	10	14	15	16	17	18	19	20	22	30	31	41	49	50	94	95	99	
Kilo	3,2	3,7	1,0	3,9	7,4	1,0	2,1	7,6	7,4	0,6	1,3	3,2	1,8	1,6	0,3	1,1	1,6	
Pounds	7.1	8.1	2.2	8.6	16.3	2.2	4.6	16.7	16.3	1.3	2.9	7.1	4.0	3.5	0.7	2.4	3.5	

METALIKA Locking systems KACIN
www.metalika-kacin.com

10 C

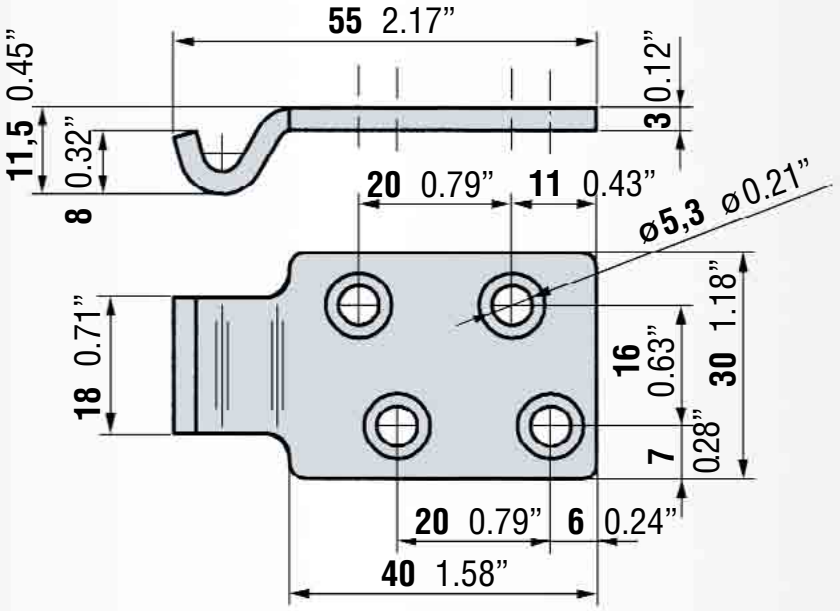

14 C

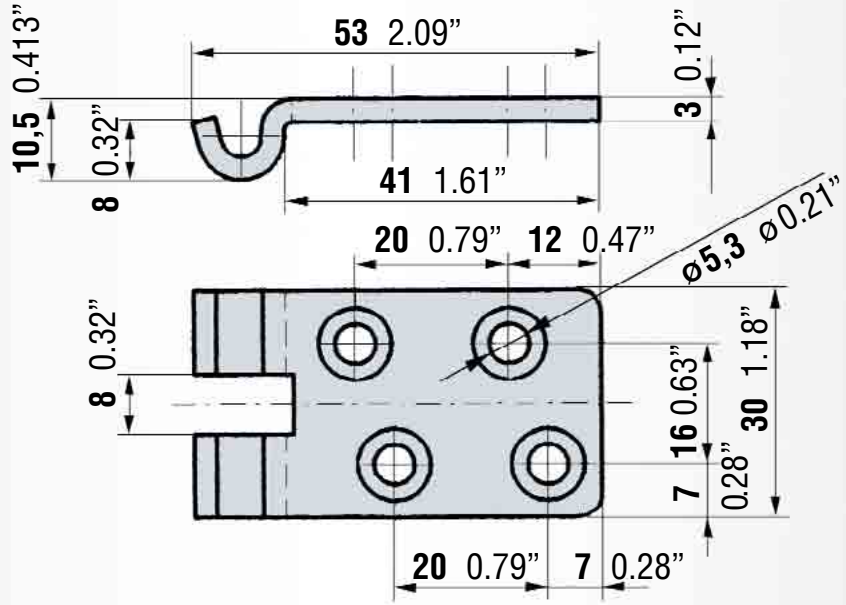

15 C

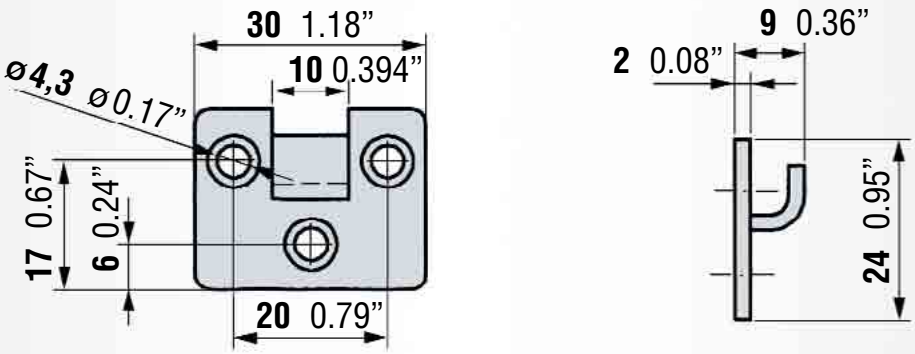

16 C

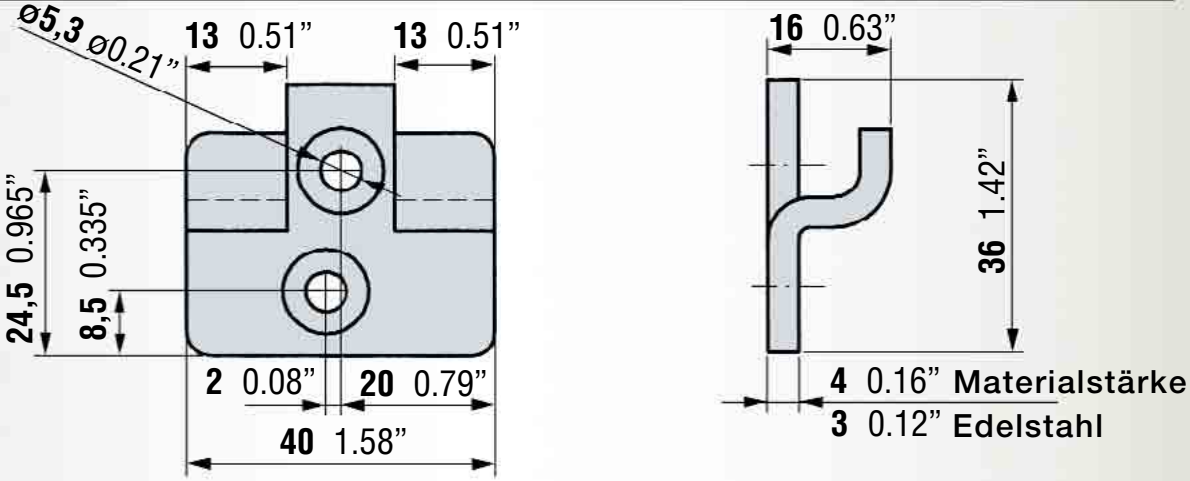

17 C

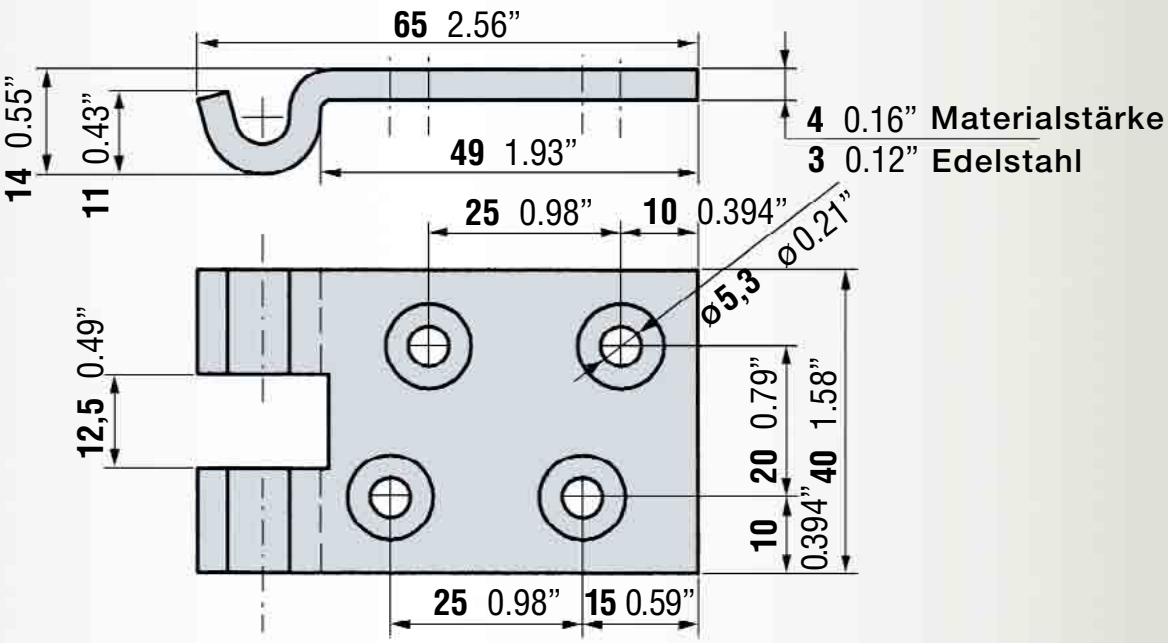

18 C

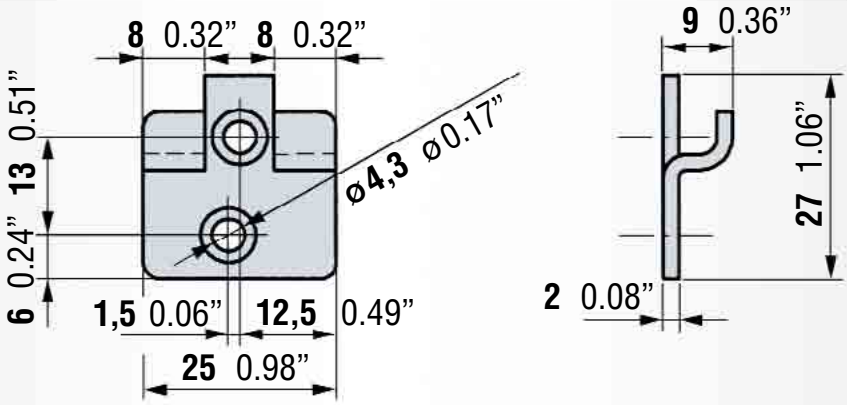

19 C

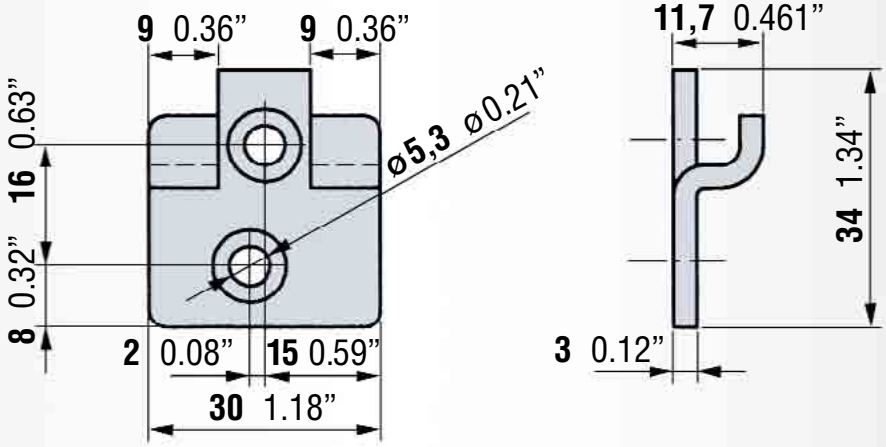

20 C

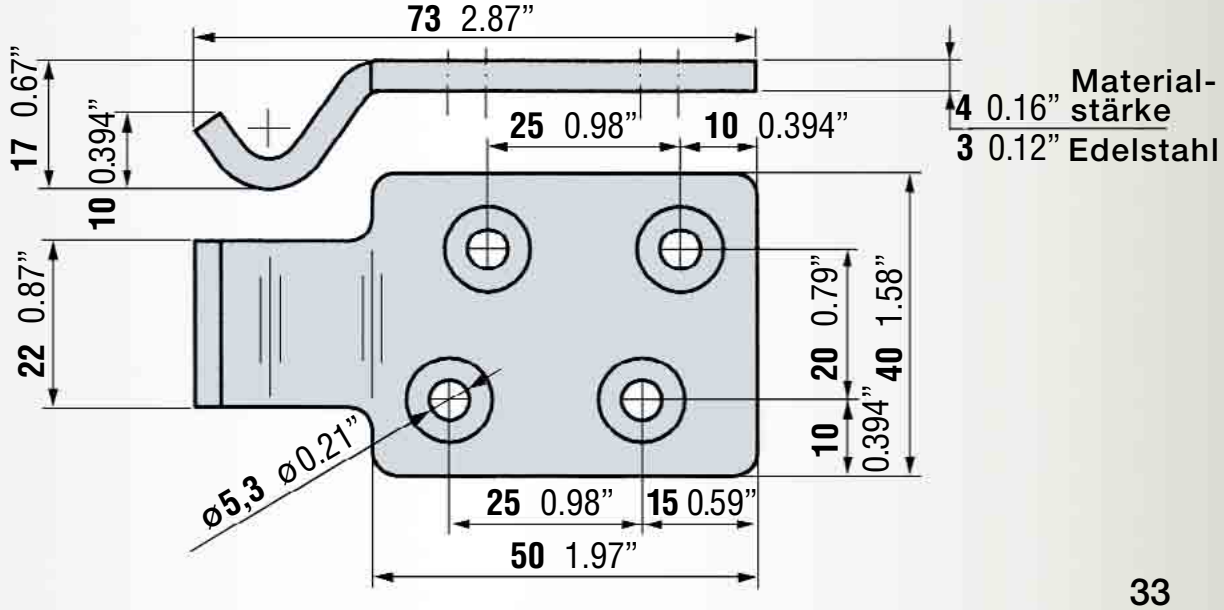

22 C

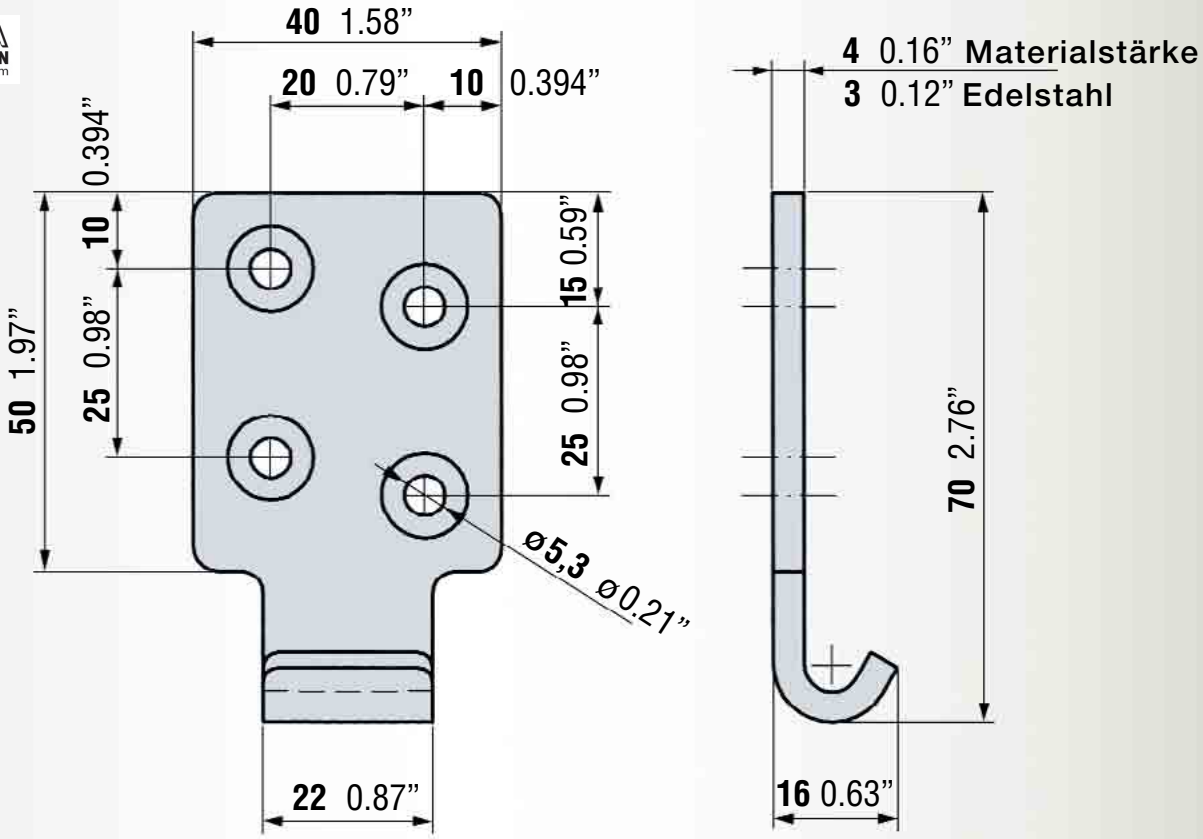
40 1.58”
20 0.79”
10 0.394”
0.394”
10
25 0.98”
50 1.97”
15 0.59”
25 0.98”
ø5,3 ø0.21”
22 0.87”
4 0.16” Materialstärke
3 0.12” Edelstahl
70 2.76”
16 0.63”

30 C

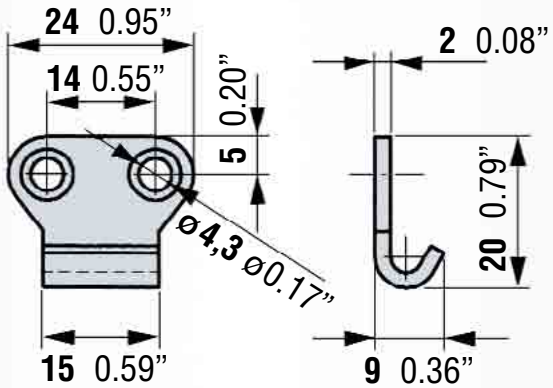
24 0.95”
14 0.55”
5 0.20”
ø4,3 ø0.17”
15 0.59”
2 0.08”
20 0.79”
9 0.36”

31 C

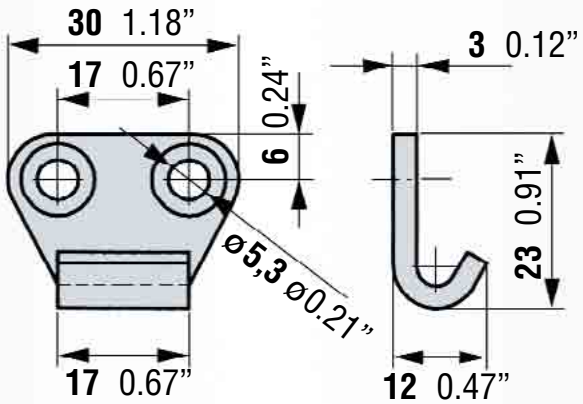
30 1.18”
17 0.67”
6 0.24”
ø5,3 ø0.21”
17 0.67”
3 0.12”
23 0.91”
12 0.47”

41 C

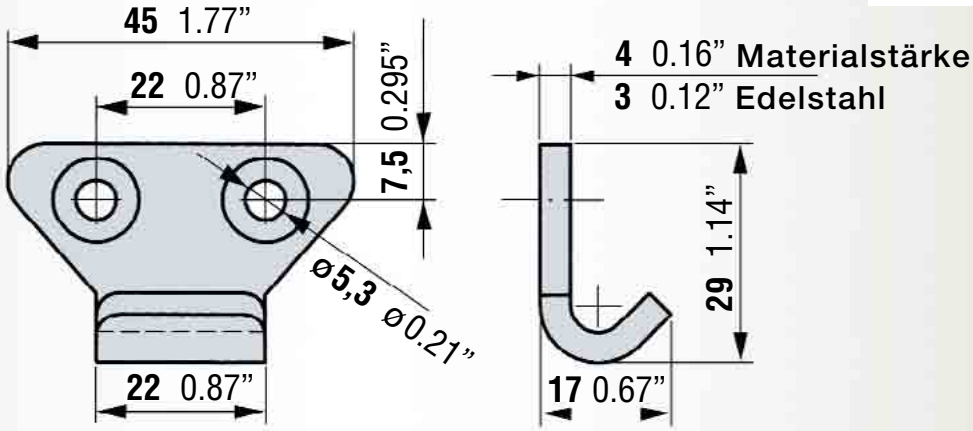
45 1.77”
22 0.87”
0.295”
7,5
ø5,3 ø0.21”
22 0.87”
4 0.16” Materialstärke
3 0.12” Edelstahl
29 1.14”
17 0.67”

49 C

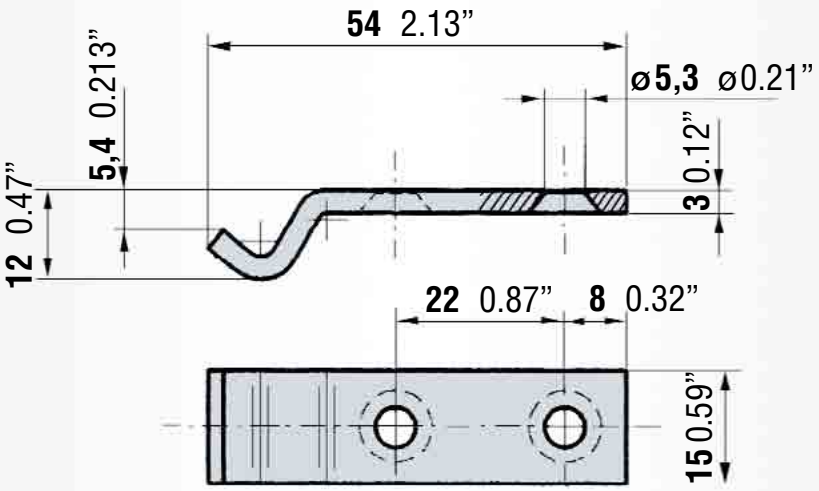
54 2.13”
5,4 0.213”
12 0.47”
ø5,3 ø0.21”
3 0.12”
22 0.87”
8 0.32”
15 0.59”

50 C

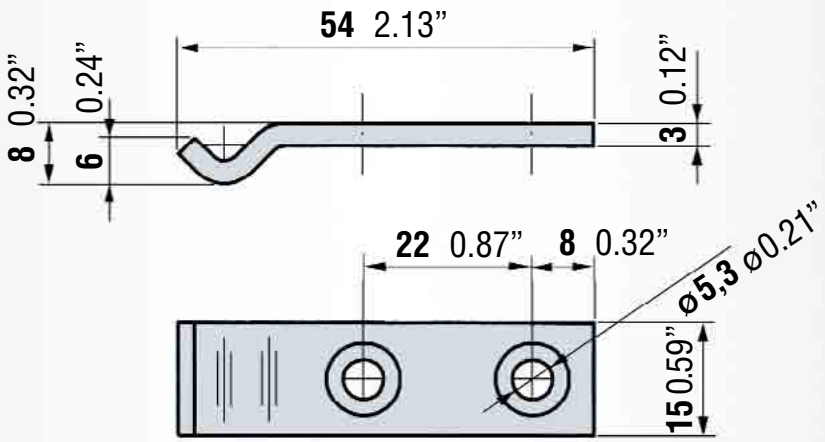
54 2.13”
8 0.32”
6 0.24”
3 0.12”
22 0.87”
8 0.32”
ø5,3 ø0.21”
15 0.59”

94 B

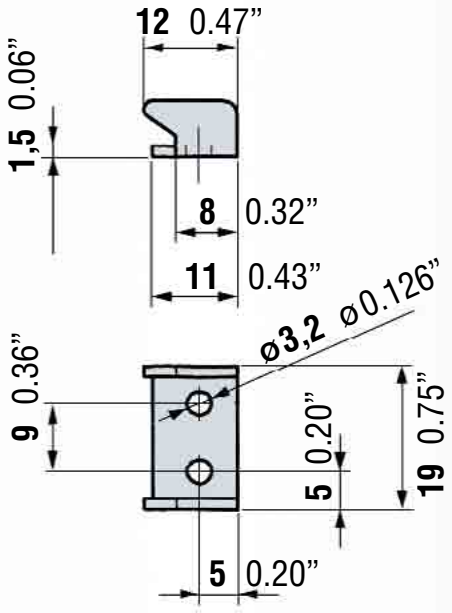
12 0.47”
1,5 0.06”
8 0.32”
11 0.43”
ø3,2 ø0.126”
9 0.36”
5 0.20”
19 0.75”
5 0.20”

95 C

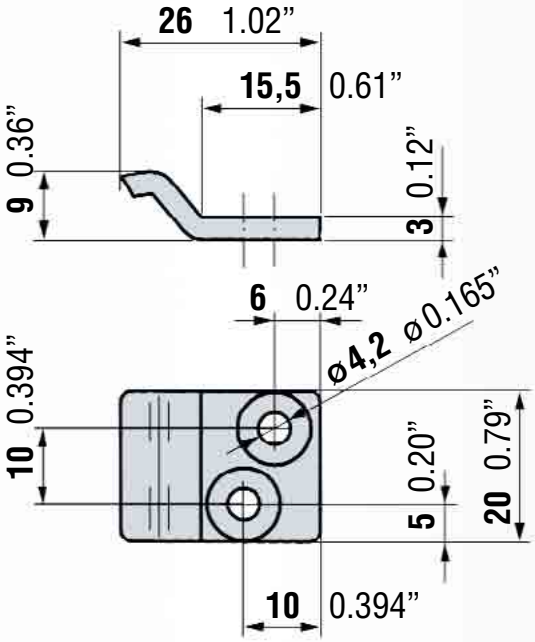
26 1.02”
15,5 0.61”
9 0.36”
3 0.12”
6 0.24”
ø4,2 ø0.165”
10 0.394”
5 0.20”
20 0.79”
10 0.394”

99 C

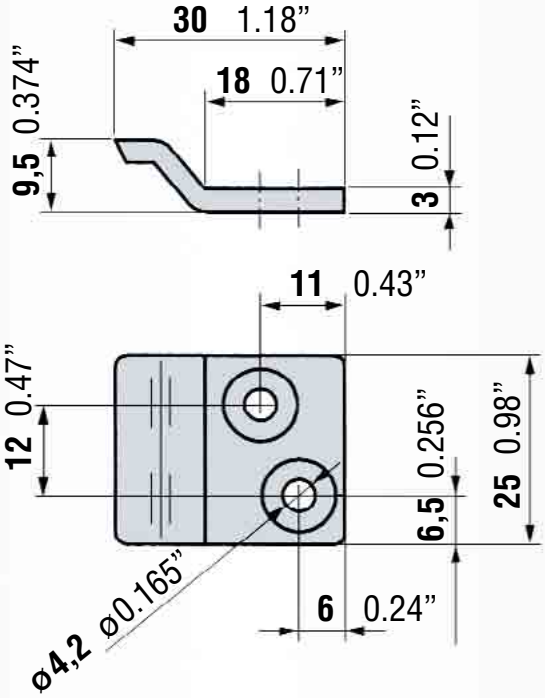
30 1.18”
18 0.71”
9,5 0.374”
3 0.12”
11 0.43”
12 0.47”
6,5 0.256”
25 0.98”
ø4,2 ø0.165”
6 0.24”

Spezialverschlüsse für verschiedene Anwendungsfälle

METALIKA Locking systems KACIN
www.metalika-kacin.com

703 L/C

m. Spezialoberteil für Kabinenaufbau

703 C

m. Ringschraube (Ein/Aus-funktion Funktion im elek. Bereich)

702 A

m. Schlitzlochung f. z. B. Nylonband, Stahlspannband etc.

701 S/A + 30 A

als Kabelkanalsicherung, Verschluss + Gegenhaken konfektioniert m. Stahlband

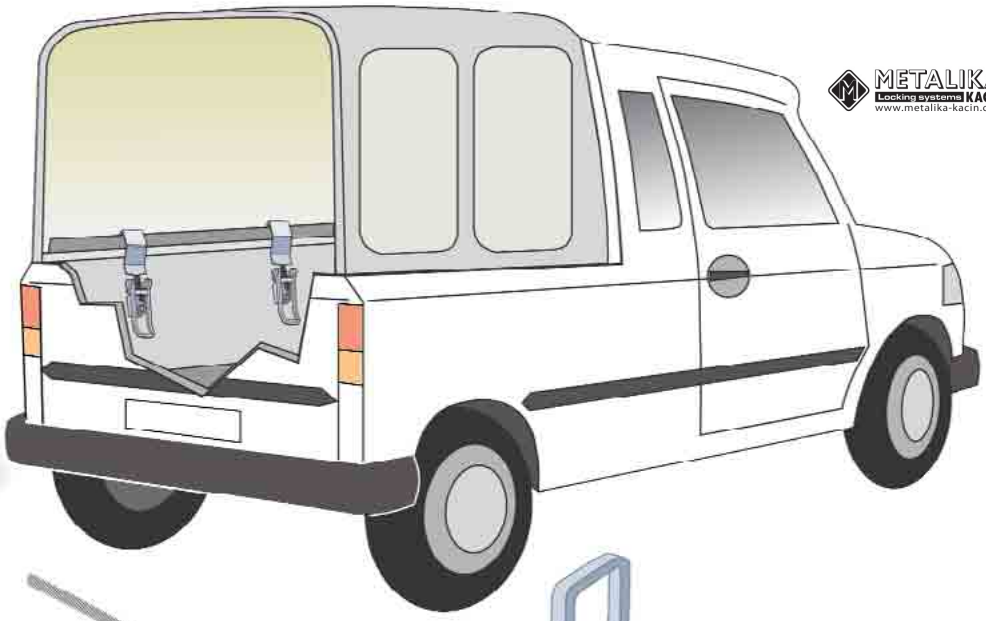

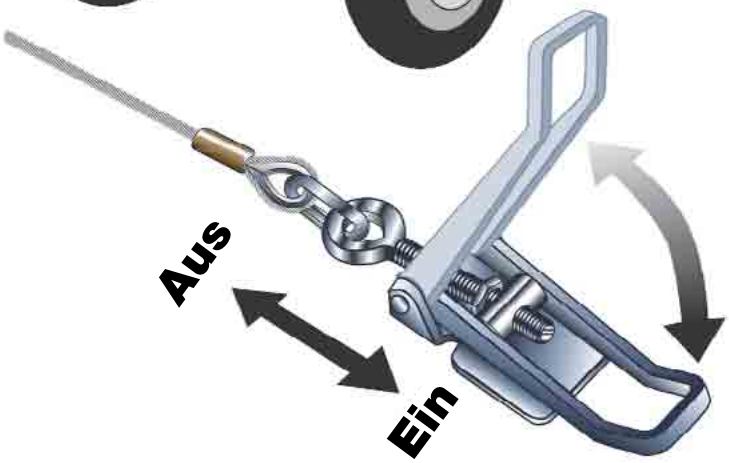
Aus
Ein

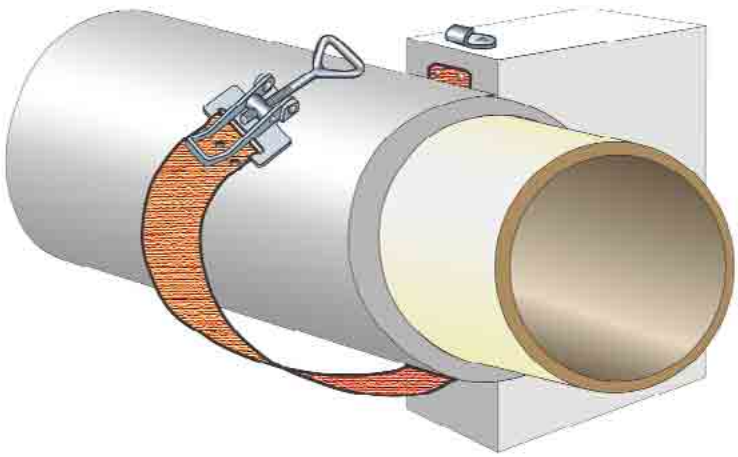

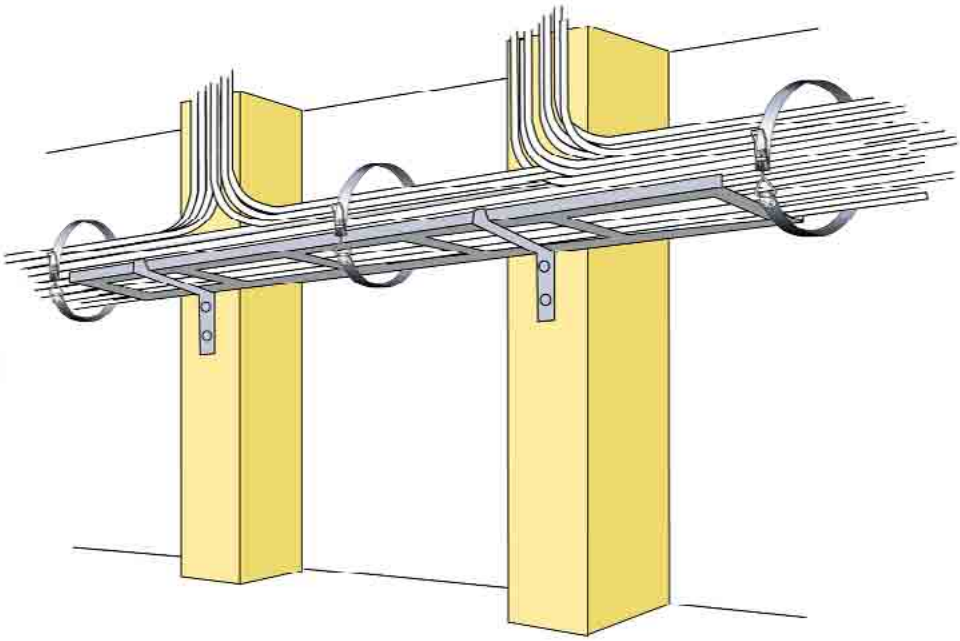

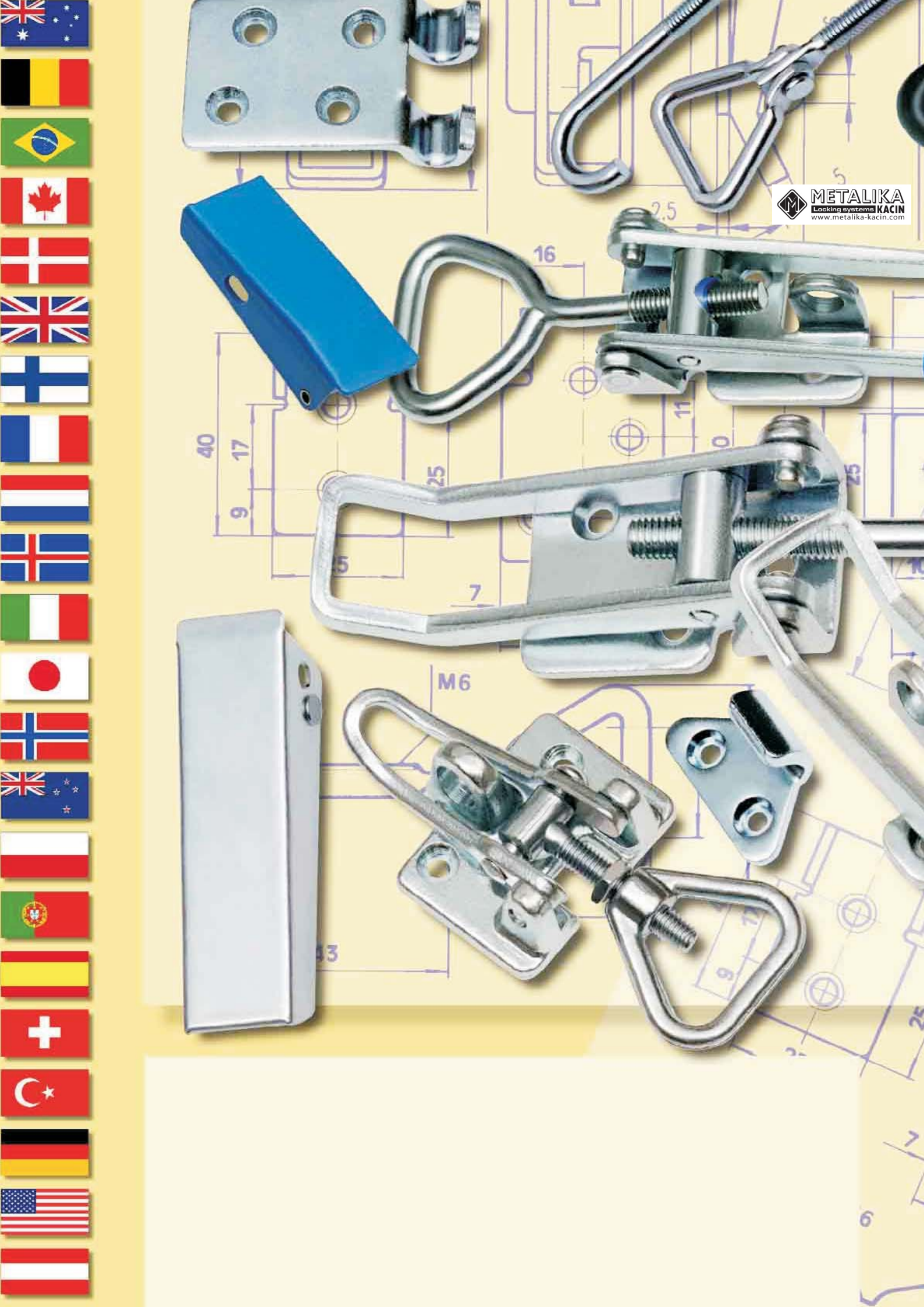
METALIKA
Locking systems KACIN
www.metalika-kacin.com
M6