6-120 Slam Lock

Robust, screw-on slam-lock.

Material:
steel, zinc plated

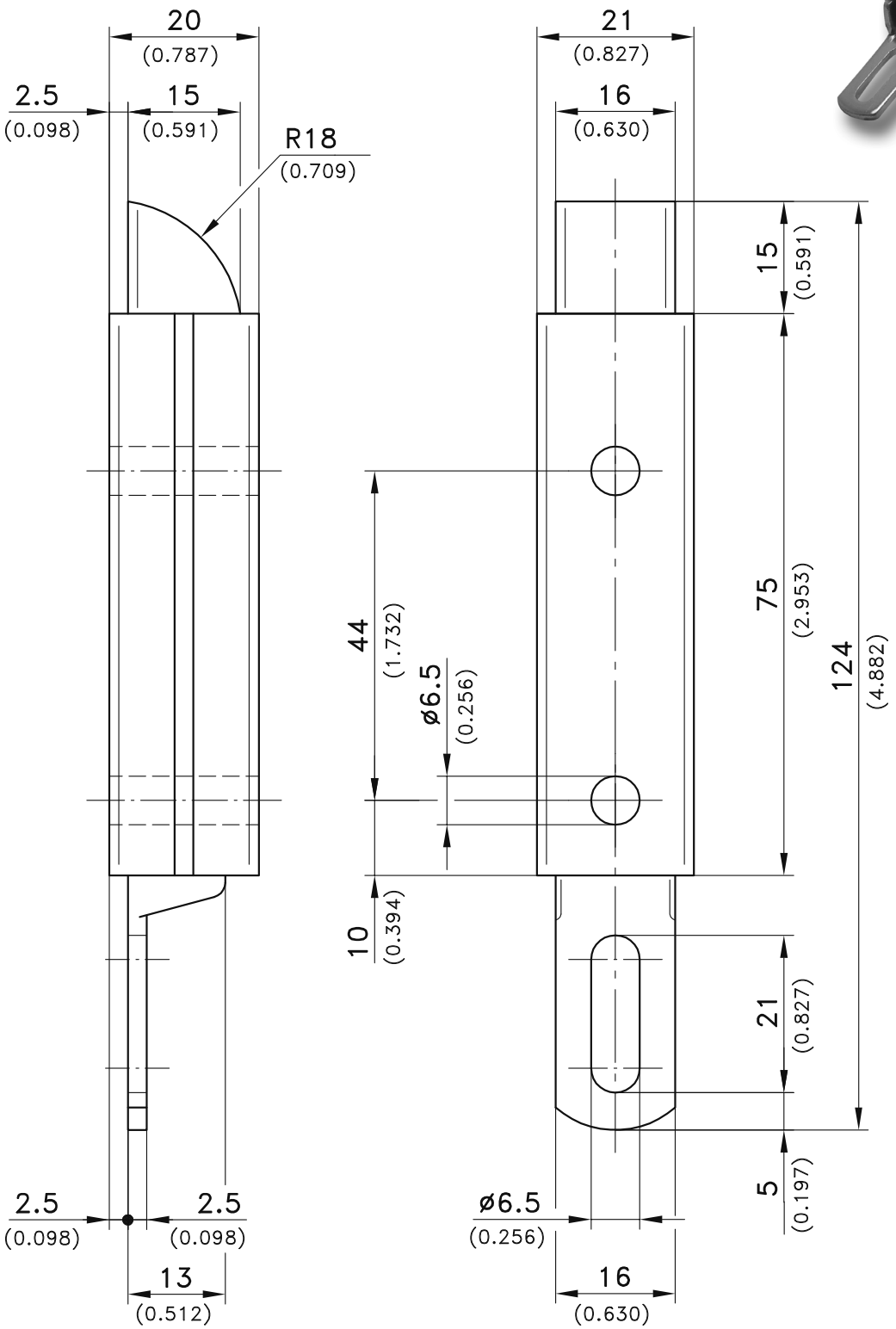

Slam-Lock	Part No. 229-9001

04/12/2010
© copyright by DIRAK / Germany

DIRAK GmbH Königsfelder Str. 1 D-58256 Ennepetal
Phone:+49 (0) 2333.837-0 Fax: +49 (0) 2333.837-100 www.dirak.com

6-130 Dual Ball Catch

Hand operable, Push to close

Material:

- **Ball catch and counterpart:** Brass or Brass, Chrome Plated
- **Spring:** Stainless Steel
- **Ball:** Stainless Steel

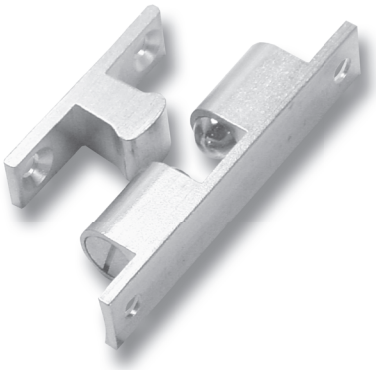

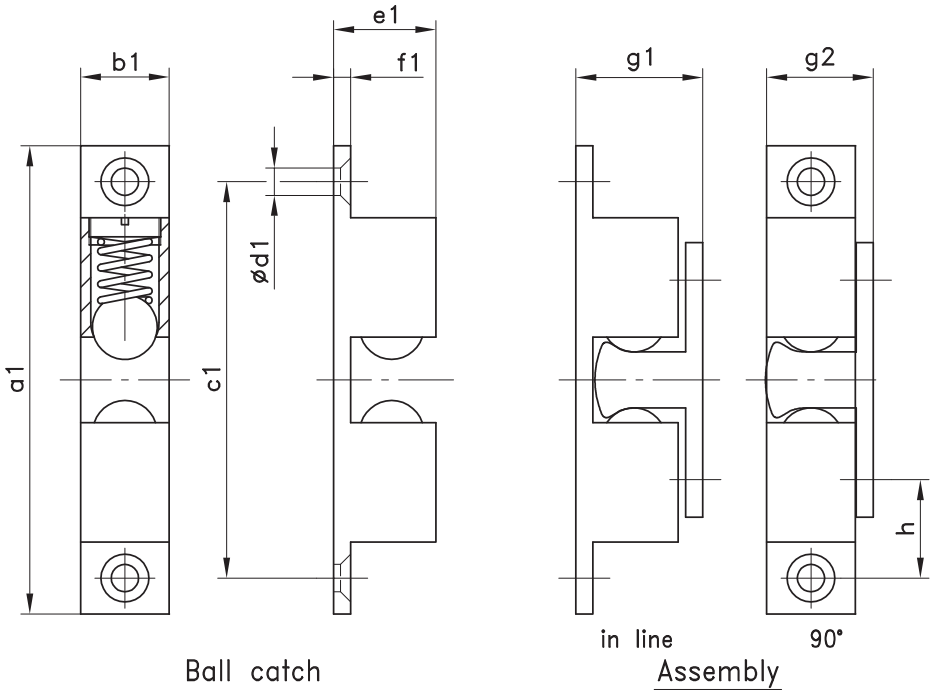

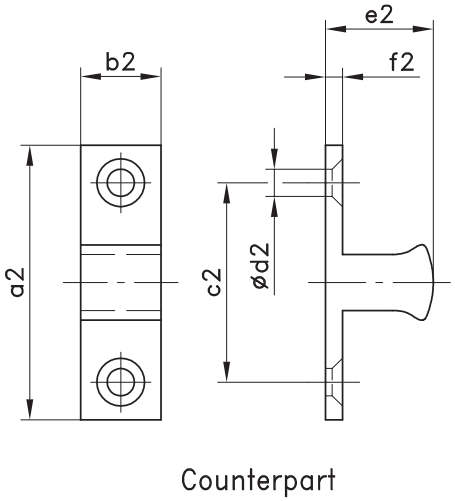

Part No.		Ball catch						Counterpart						Assembly		
Brass	**Chrome Plated**	**a1**	**b1**	**c1**	**d1**	**e1**	**f1**	**a2**	**b2**	**c2**	**d2**	**e2**	**f2**	**g1**	**g2**	**h**
263-9001	**263-9007**	43.5	8.0	35.0	3.8	9.4	2.0	24.7	7.5	15.2	3.8	9.8	1.7	11.8	9.7	9.9
263-9002	**263-9008**	49	8.8	39.8	3.8	10.6	2.0	28.8	7.6	19.8	3.8	11.2	2.0	13.2	10.8	10.0
263-9003	**263-9009**	59.8	11.2	49.8	5.2	13.2	2.4	34.8	10	24	5.2	13.5	2.2	15.9	13.4	12.9
263-9004	**263-9010**	68.4	13.0	58.0	5.2	15.0	2.4	40.2	12	30	5.2	15.7	2.3	18.1	15.2	14.0

10-01-2012 © copyright by DIRAK / Germany

1-250 Pull and Lock Hook

with compression

Pull and lock hook with compression
- 5mm compression/pulling distance.
- With 90° stroke.
- Vibration-proof.
- Latching direction is always clockwise.
- The extremely positive torque ratio allows for controlling this hook-latch by a cylinder latch.
- Very suitable for applications on 19" racks and sliding doors.
- This device can be operated by all Quarter Turns or handles on page 02.26, 02.37 to 02.51.

Material:

a)
- **Pull and lock hook**
  steel, zinc plated

b)
- **Weld-on pin:**
  steel, zinc plated

c)
- **Line-up fork:**
  steel, zinc plated

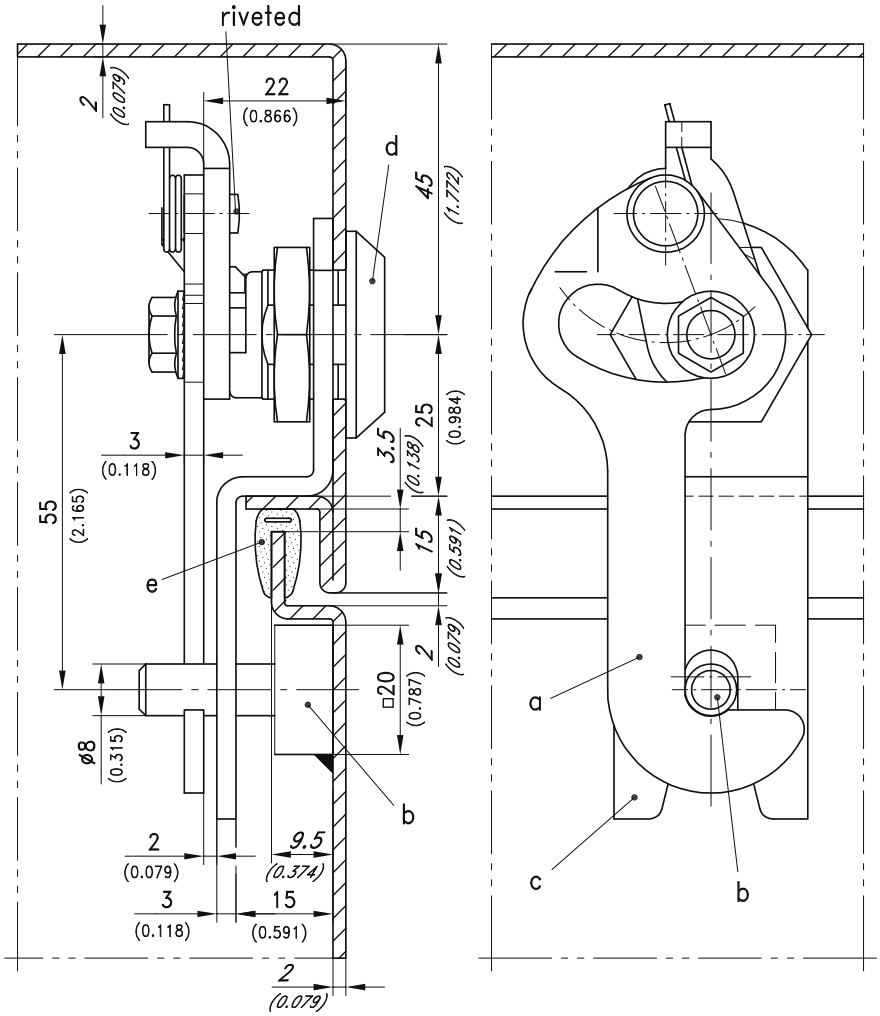

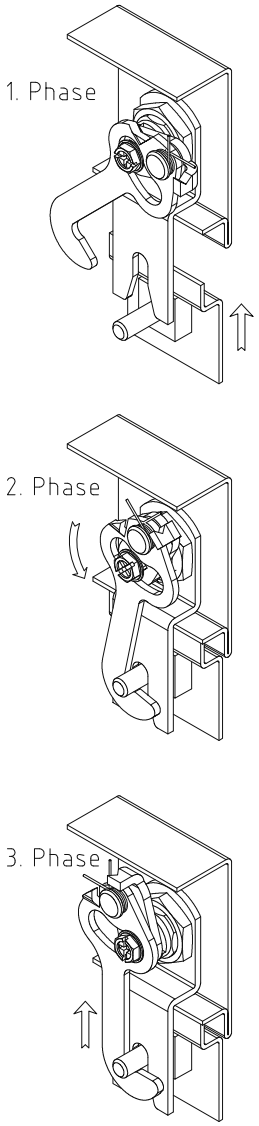

The latching- and compression process has 3 phases:
1. phase: Open position.
2. phase: Hook catches behind the frame pin and continuing the closing rotation, the hook is then being pulled automatically against the frame pin. The pulling stroke is 5mm.
3. phase: At the end of rotation process the hook has a vibration proof latch behind the frame pin.

	Version	Part No.	see page
a)	**Pull and lock hook**	**200-9602**	
b)	**Weld-on pin for pull-and-lock hook**	**200-3704**	
	Please order separately:		
c)	**Line-up fork**	**200-3703**	
d)	**Housings and inserts or handles**		**02.26, 02.37**
e)	**e.g. Clip-on profiles**	**209-0302**	**07.9**

04/12/2010
© copyright by DIRAK / Germany

1-060 Snap/Push-Lock

Snap/Push lock with slam function, nut or clip fixing.

- Released by pushing.
- Lager lockable version see page 05.7 or 05.8.

Material:

Version A:

- **Snap-Lock:** zinc die, chrome plated a)
- **Fingerpull:** PA, black

Version B:

- **Snap-Lock:** zinc die, chrome plated

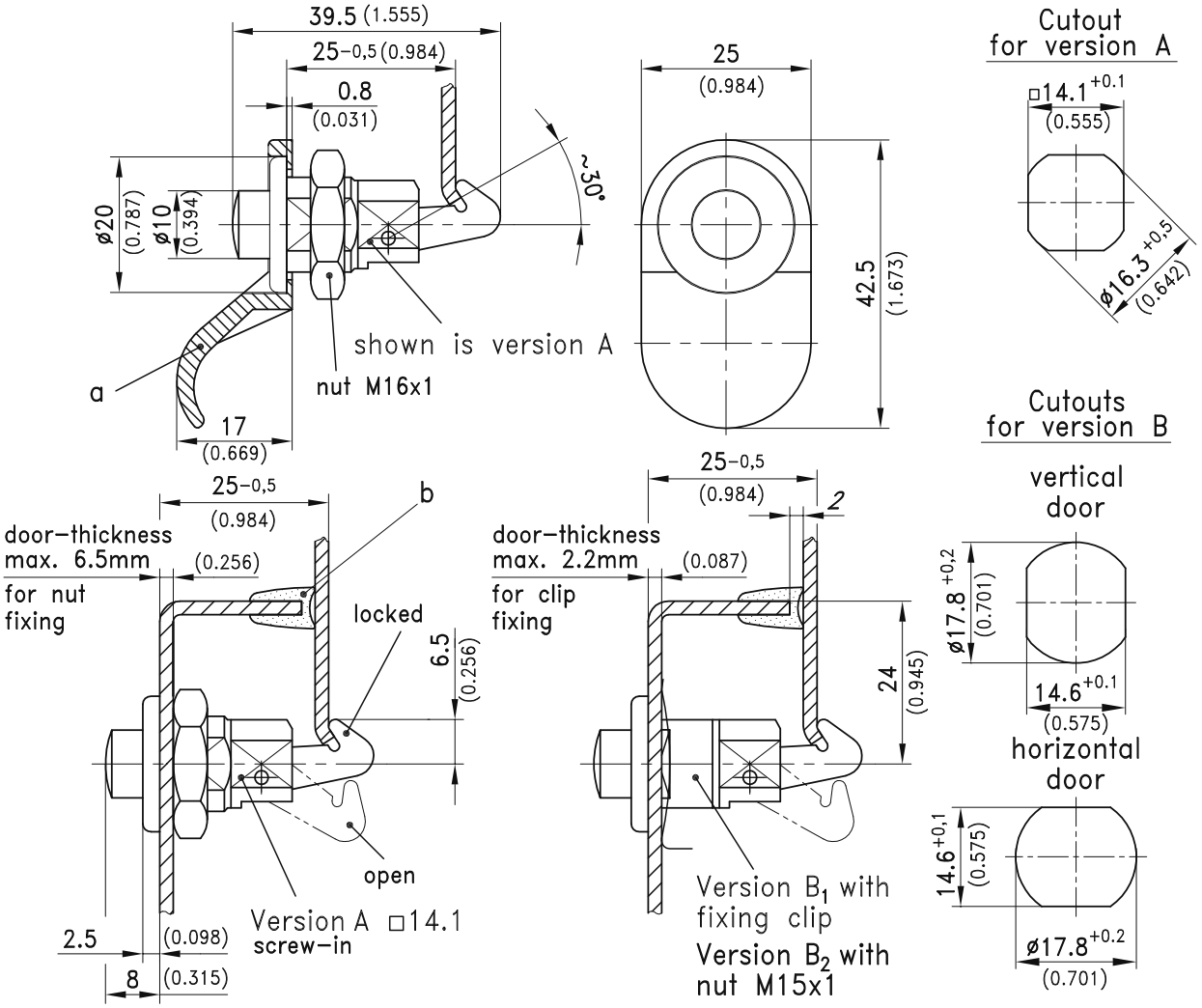

	Snap/Push lock Version A	Part No.	see page
	A for □ 14,1mm / 0.555	**252-9001**	
	Please order separately:		
a)	**Finger pull (only for version A)**	**220-1301**	
	Snap/Push lock Version B		
	B1 with fixing clip	**252-9003**	
	B2 with nut M15x1	**252-9004**	
b)	**i.e. Rectangular Profiles**	**209-0301**	**07.9**

04/12/2010
© copyright by DIRAK / Germany

1-068 Pull Latch Handle

The Pull Latch Handle is used by 19“ engineering for locking insertions.

- The completely pre-assembled unit is fastened by a countersunk screw M4.
- LH and RH application.
- When inserting the plug-in unit the free running slam hook latches into the appropriate cutout and locks the plug-in unit with the frame.
- Drawing at the handle unlocks the plug-in unit and it can be pulled out by the handle.

Material:

- **Housing and handle:**
  zinc die, matt chrome plated.
- **Spring for insert:**
  spring steel
- **Hook:**
  sintered steel, zinc plated

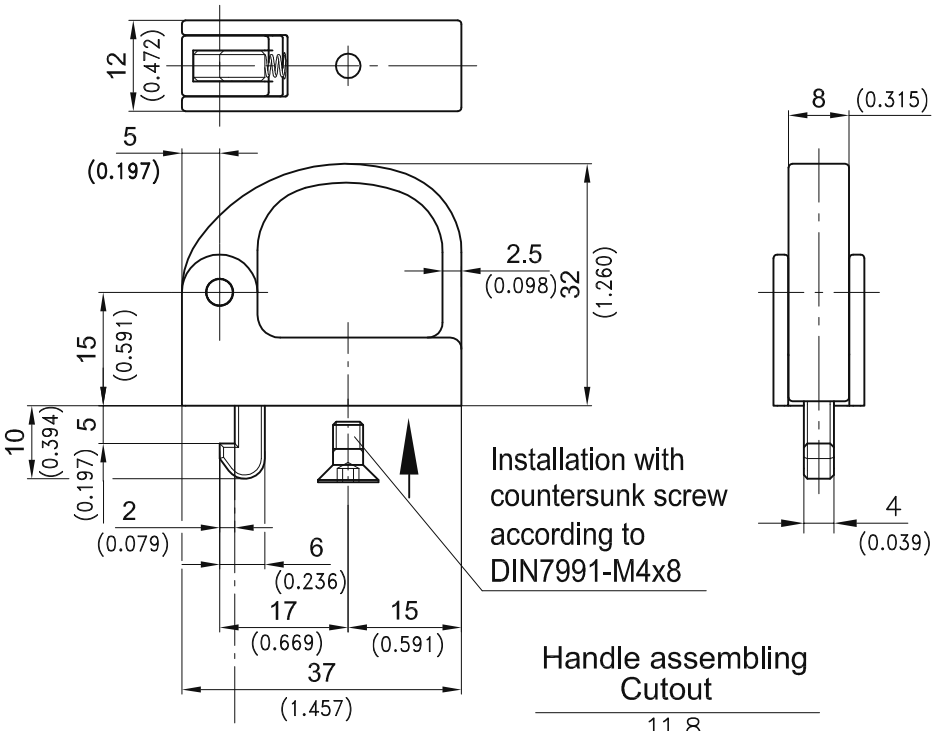

Cutout for locking hole

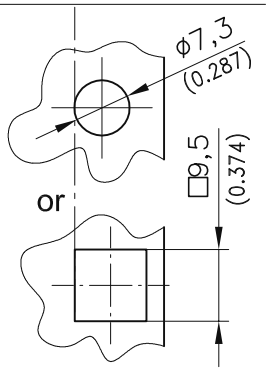

Handle assembling Cutout

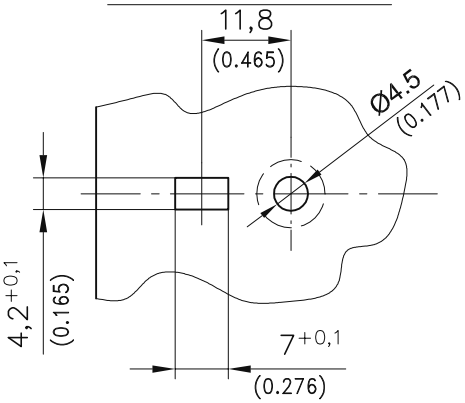

Operation

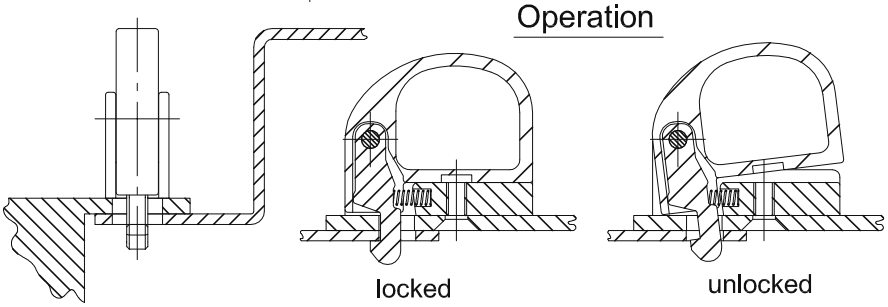

	Part No.
Pull Latch Handle	**280-9101**
The countersunk screw is not included.	

04/12/2010
© copyright by DIRAK / Germany

6-150 Slam Latch

Hand operable with or without key, Push to close

Product Notes:

- Latch for aluminum profiles or nested doors
- Frame part catches the slam bolt when closing preventing door from swinging past the door frame.
- Latch can accommodate aluminum profile frames of different widths
- Pulling the handle will disengage the slam-bolt.
- Unit is attached with 4 screws M6 (e.g. DIN 912, not included) into sliding tenon nuts
- Lockable latches are supplied with 2 keys.
- Chrome Plated/black on request.

Material:

- **Door- and frame housing:** Zinc Die, Chrome Plated or Black Coated
- **Handle:** Zinc Die, Chrome Plated or Black Coated
- **Bolt:** Zinc Die, Untreated
- **Tenon nut:** Steel, Zinc Plated

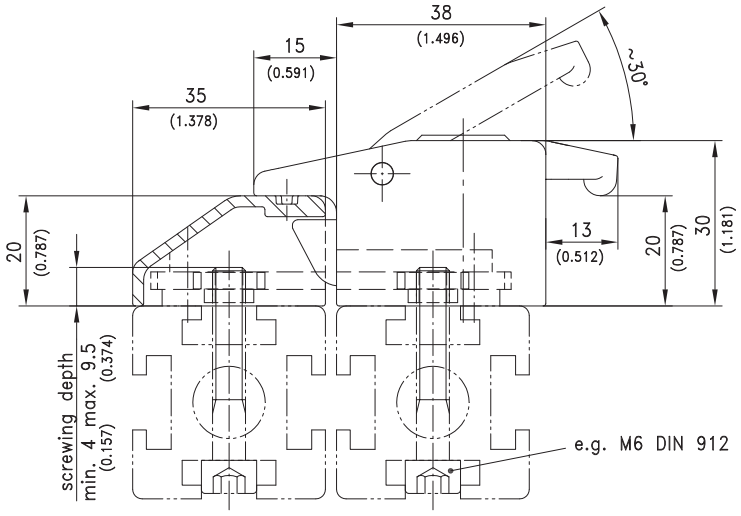

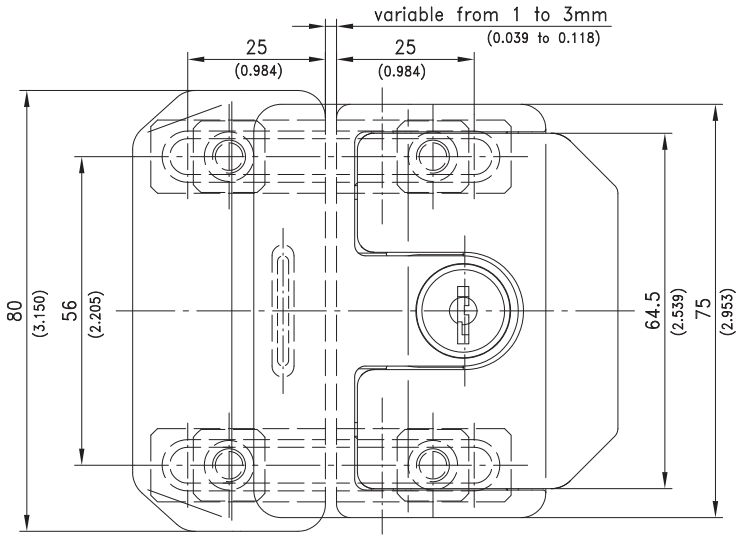

Slam Latch	Chrome Plated	Black
Non locking	265-9606	265-9605
Keyed alike DIRAK 1333*	265-9601	265-9602
Keyed alike DS200*	565-9601	565-9602
Keyed different	265-9603	265-9604

*** with stainless dust-shutter**

10-01-2012 © copyright by DIRAK / Germany

1-300 Slam-Latch

Slam-latch for doors and panels.
- Can be opened by key or handle.
- The slam-latch is screwed onto the latch support, which is either screwed or, in case of heavy application, welded to the door.
- If assembled without insert it can be opened with tapered square key.
- The slam bolt has a slam feature.

Material:

a)
- **Housing:** steel, zinc plated
- **Bolt:** zinc die, zinc plated

b)
- **Lock support:** steel, zinc plated

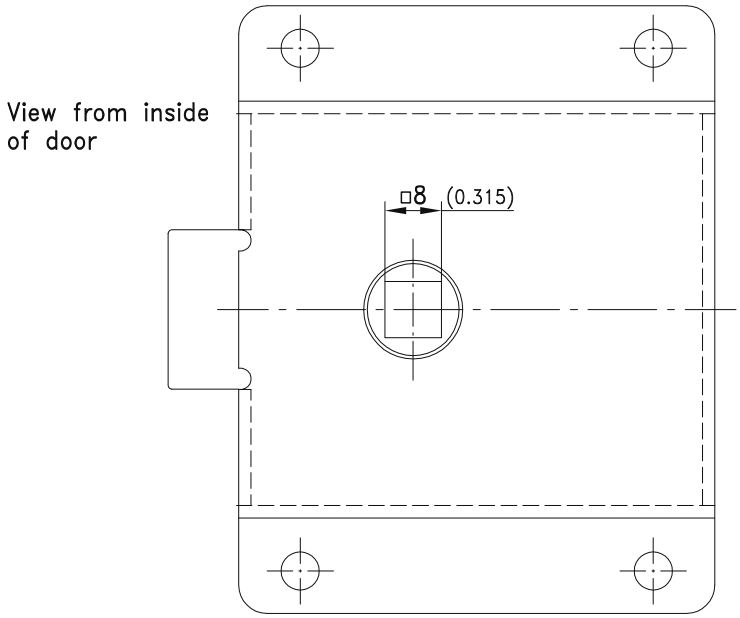

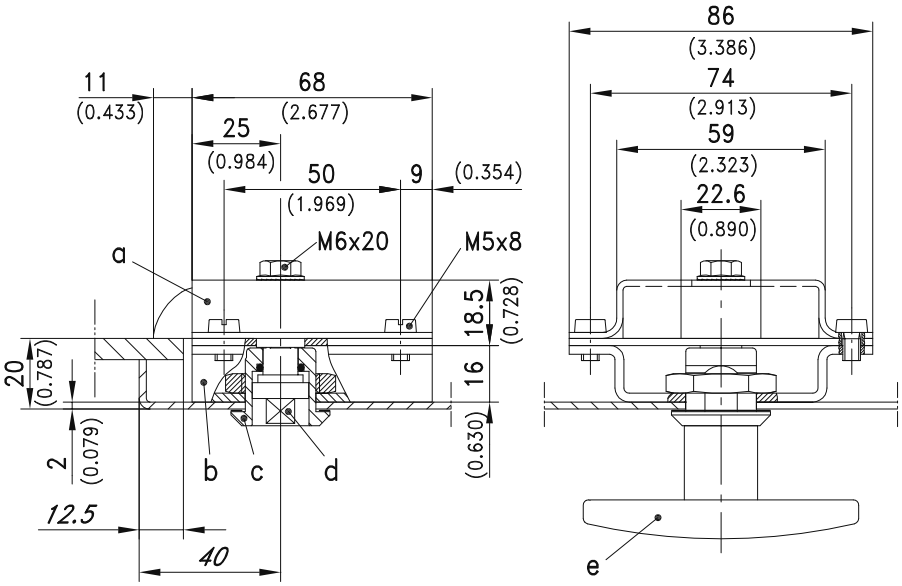

	Part No.	see page
a) Slam-latch	229-9101	
b) Lock support	229-0501	
c) Housing with nut e.g.	200-9005	02.26
d) Insert		02.34
Optional:		
e) T-Handle		02.44
e2) L-Handle		02.48
e3) Wing handle		02.39
Fitting hardware		09.4

04/12/2010
© copyright by DIRAK / Germany

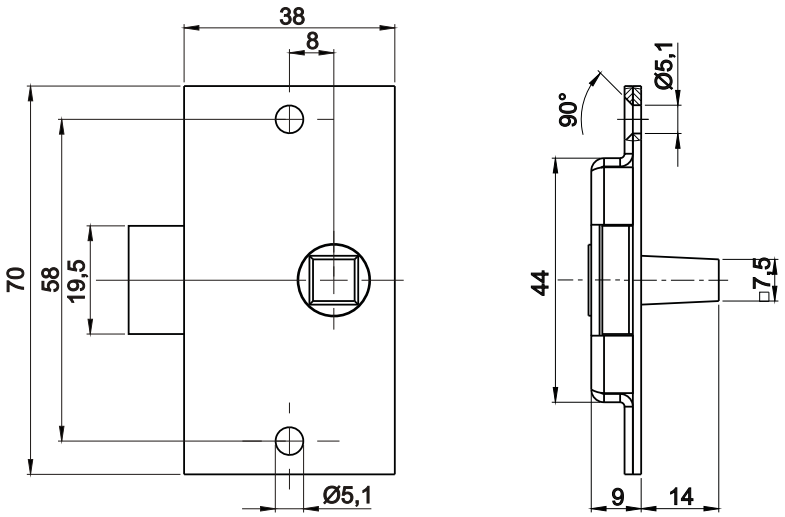

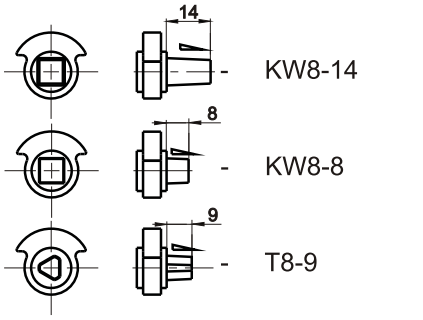

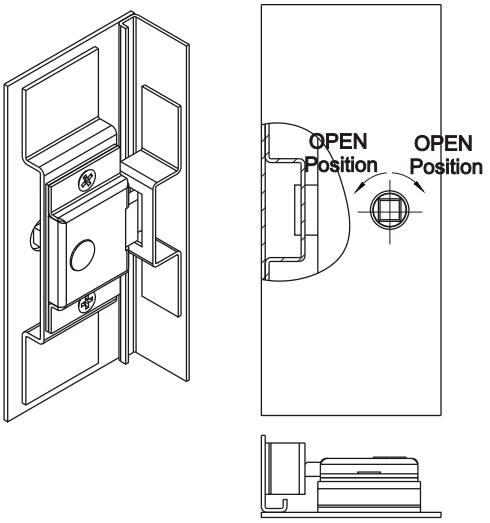

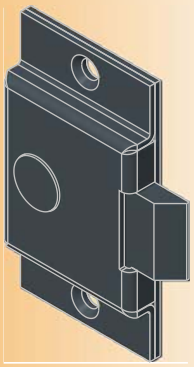

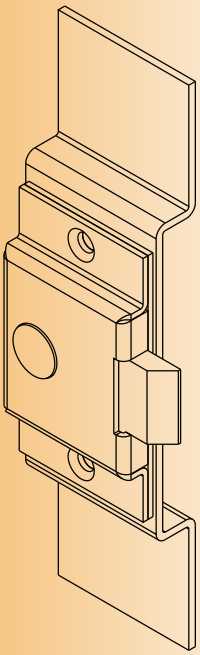

COMPONENTS	MATERIAL
Housing	*Steel - zinc plated, 1.4301*
Insert	*Brass*

1-500 Snap-Lock L30

The spring loaded cam of this slam-lock is operated by the key.

- Lock is supplied with nut and wide stabilizing washer underneath nut.

Material:

- **Snap-Lock:**
  zinc die, chrome plated
- **Washer:**
  steel, zinc plated
- **Nut:**
  steel, zinc plated

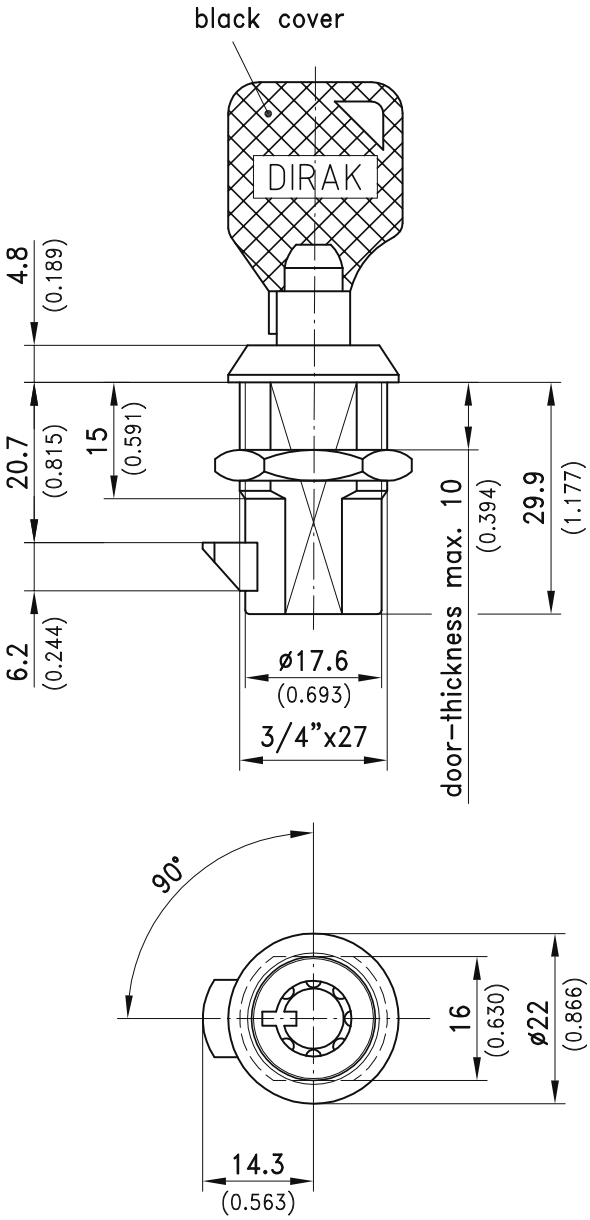

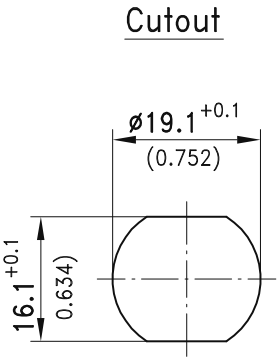

Snap-lock	Part No.
keyed alike DIRAK D0205	264-9102
keyed different/mixed	264-9101

All locks supplied with two keys.

04/12/2010
© copyright by DIRAK / Germany

1-501 Snap-Lock L31.5/36.5

Hand operable with or without key, Push to close

Product Notes:

- Push to close latch - two versions:
  Version A: Spring loaded cam is operated with special key
  Version B: Spring loaded cam is operated with a push button with locking option

Material:

- **Snap-Lock:** Zinc Die, Chrome Plated
- **Nut:** Zinc Die

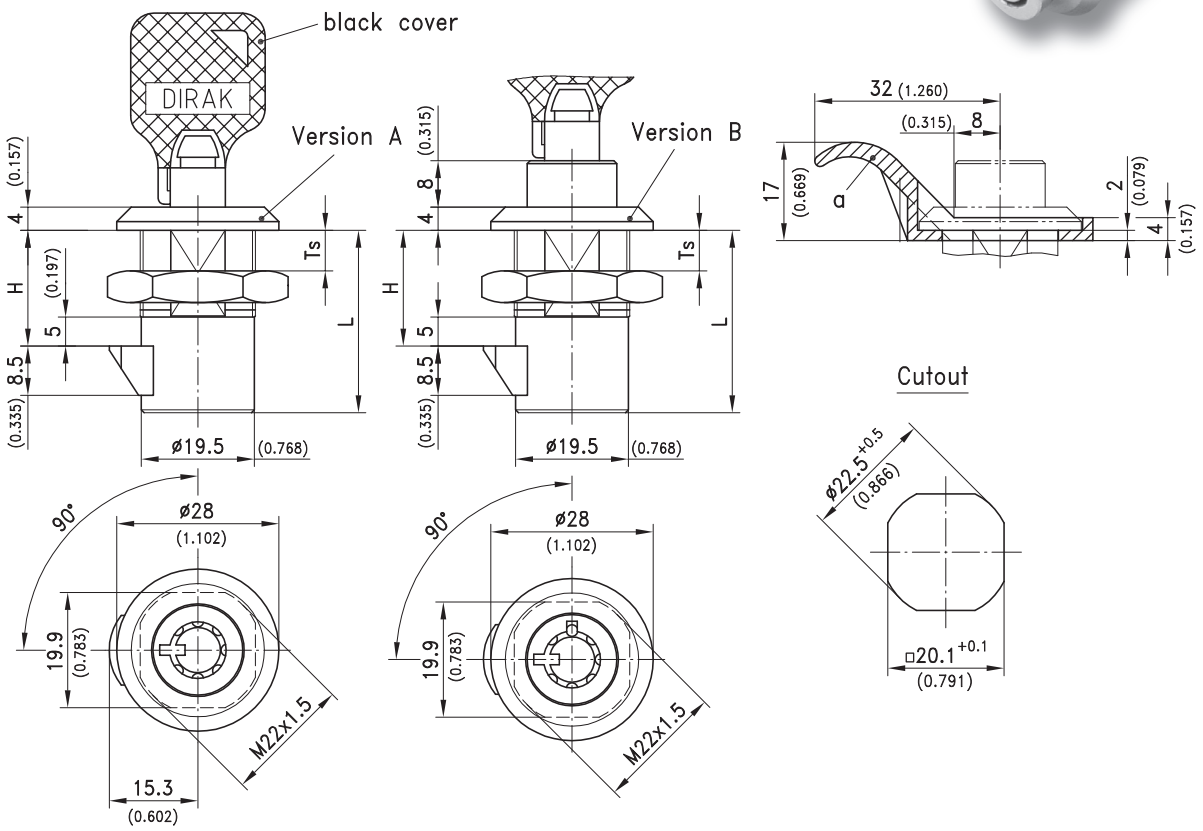

					See Page
	Housing Length	**L**	**31.5**	**36.5**	
	Door thickness	**Ts max.**	**10**	**15**	
	Latching distance	**H**	**20**	**25**	
A	**Snap-lock Key controlled with plain grounding nut**				
	Keyed alike DIRAK D0205		**264-9002**	**264-9004**	
	Keyed different		**264-9001**	**264-9003**	
B	**Snap-lock Push-button controlled with plain grounding nut**				
	Non locking		**264-9009**	**-**	
	Keyed alike DIRAK D0205		**264-9006**	**264-9008**	
	Keyed different		**264-9005**	**264-9007**	
	All locks supplied with two keys.				
	Order separately:				
a)	**Finger pull**		**200-4703.03**	**200-4703.03**	**01.106**
	By using a finger pull the dimensions Ts and H decreases by 2mm				

10-01-2012 © copyright by DIRAK / Germany

1-068 Pull Latch Handle

The Pull Latch Handle is used by 19“ engineering for locking insertions.

- The completely pre-assembled unit is fastened by a countersunk screw M4.
- LH and RH application.
- When inserting the plug-in unit the free running slam hook latches into the appropriate cutout and locks the plug-in unit with the frame.
- Drawing at the handle unlocks the plug-in unit and it can be pulled out by the handle.

Material:

- **Housing and handle:**
  zinc die, matt chrome plated.
- **Spring for insert:**
  spring steel
- **Hook:**
  sintered steel, zinc plated

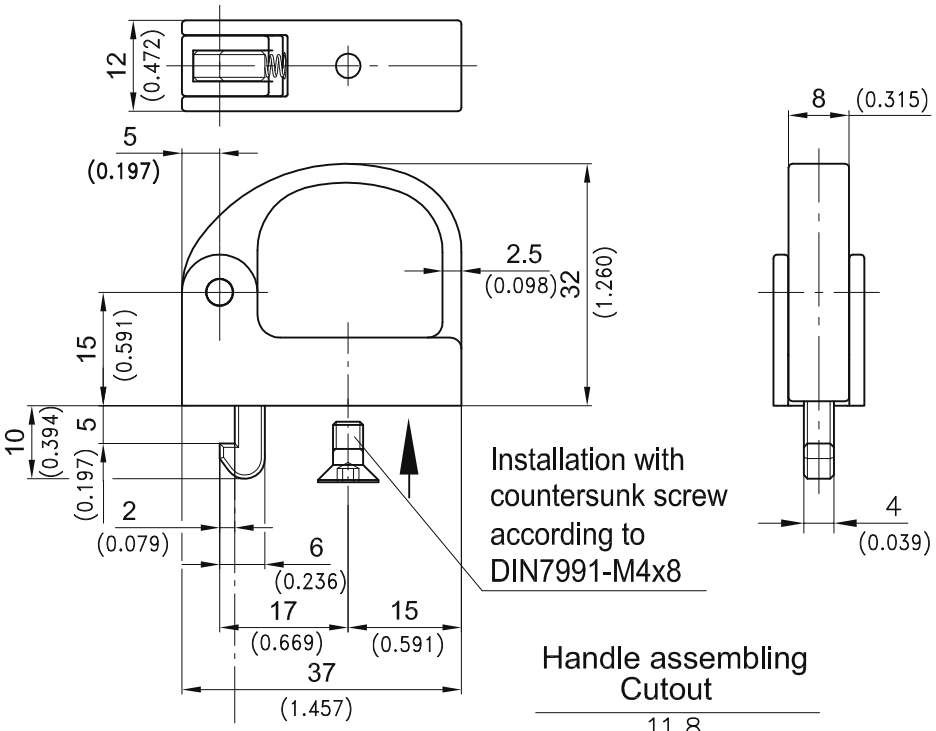

Cutout for locking hole

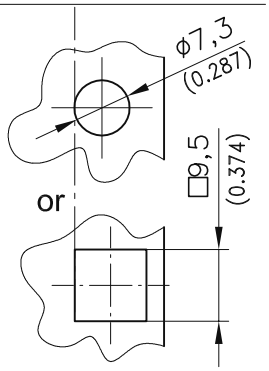

Handle assembling Cutout

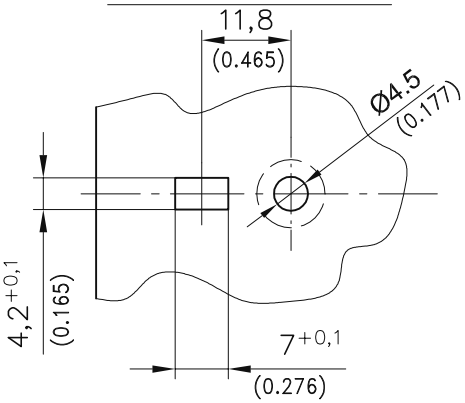

Operation

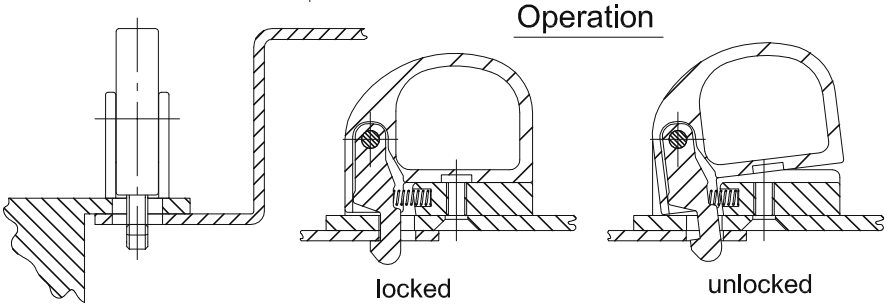

	Part No.
Pull Latch Handle	**280-9101**
The countersunk screw is not included.	

04/12/2010
© copyright by DIRAK / Germany

1-069SL Pull Latch Handle SNAP-LINE

The pull latch handle is used by 19“ engineering for locking insertions.

- The completely pre-assembled Drawer Latch Handle is installed by a simple push into the appropriate cutout.
- RH and LH application.
- When inserting the plug-in unit the free running slam hook latches into the appropriate cutout and locks the plug-in unit with the frame.
- By tilting the handle, the hook is withdrawn from the cutout and the plug-in unit can be pulled out.
- **Attention:** The bulge in the cutout is always opposite of the bolt. This cutout guarantees a unique and constant fitting.

Material:

- **Housing and handle:** zinc die, matt chrome plated.
- **Spring for insert:** spring steel
- **Snap wedges:** sintered steel, zinc plated
- **Hook:** sintered steel, zinc plated

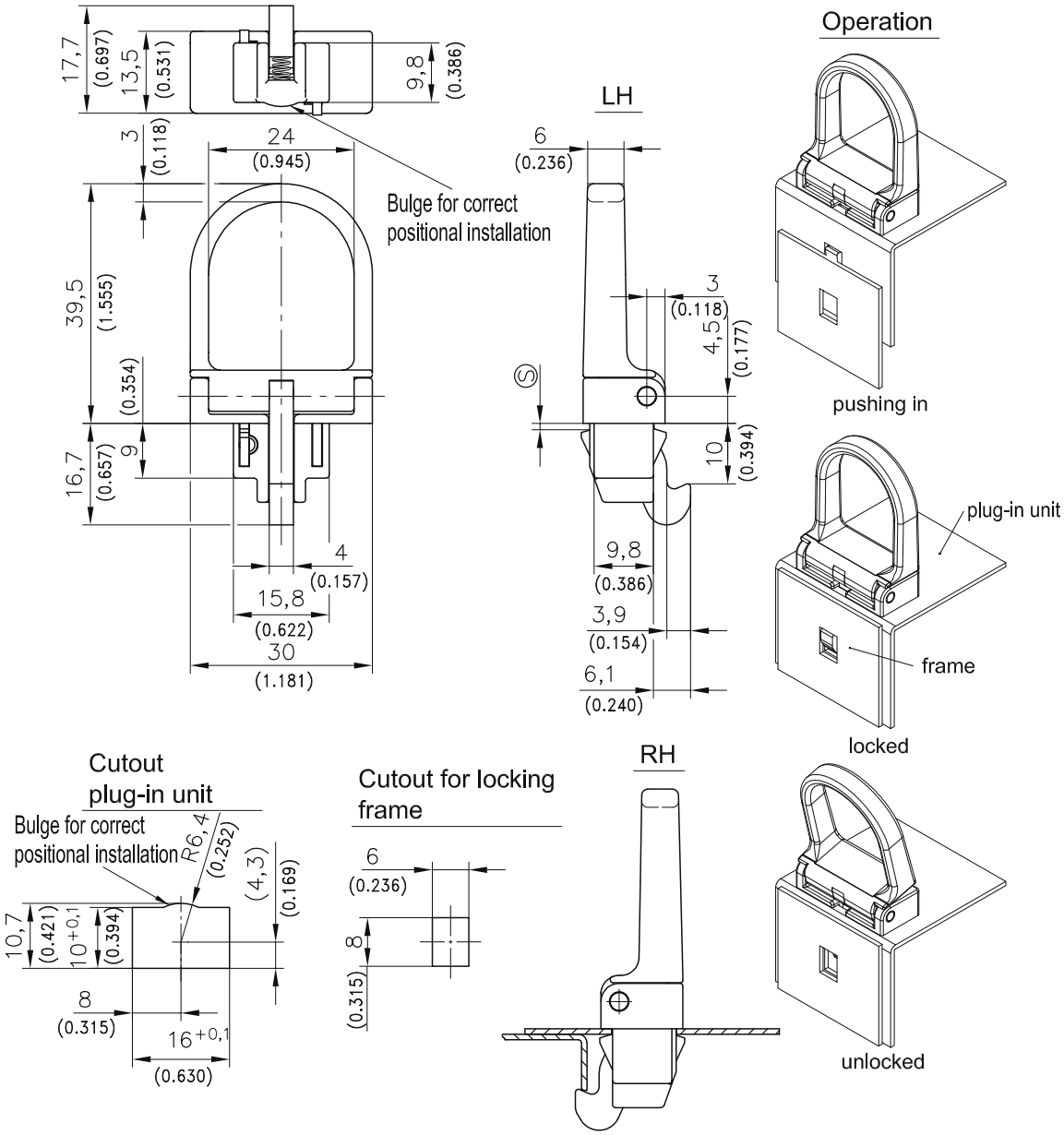

	clamping range Ⓢ	Part No.
Pull Latch Handle	**0,8 - 1,0**	**480-9002.00-00810**
	1,1 - 1,3	**480-9002.00-01113**
	1,4 - 1,6	**480-9002.00-01416**
Other Ⓢ - dimension on request!		

04/12/2010
© copyright by DIRAK / Germany

6-122SL Snap-Lock SNAP-LINE

Polyamide

Snap-lock SNAP-LINE, clip-in for door-thickness 0.8mm to 2.3mm (0.031 to 0.091).

- This non-corrosive closing device is especially suitable for latching of doors and lids.
- When the latch is released and in its final position a finger-tip grip becomes accessible to facilitate opening the door.
- Vibration-proof.
- Other colors and color combinations on request!

Material:

- **Rod latch and housing:** PA, different colours
- **Spring:** stainless steel

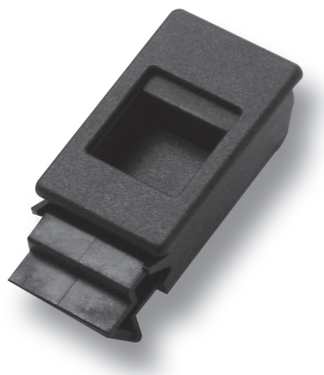

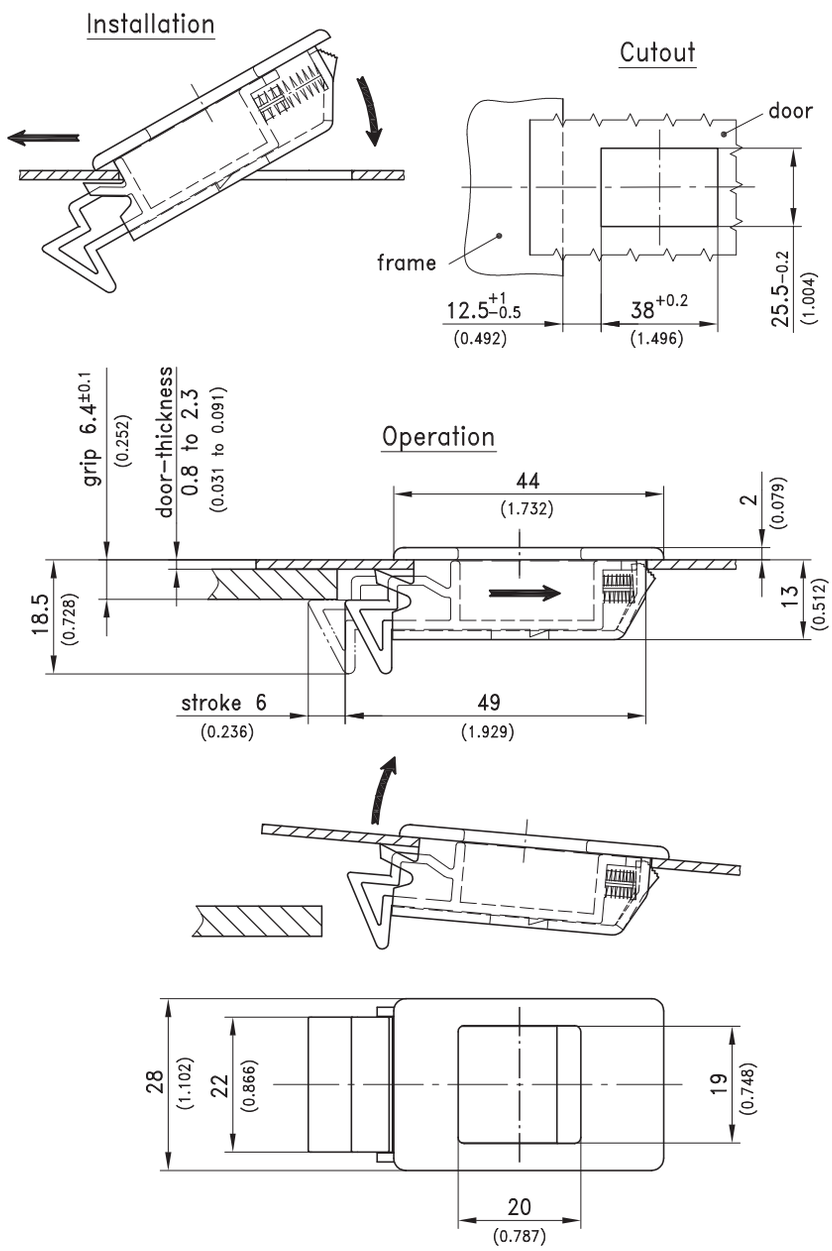

version	color	Part No.
Snap-Lock	**complete black**	**282-9001**
Snap-Lock	**complete grey RAL 7035**	**on request**
Snap-Lock	**complete red RAL 3020**	**on request**

DIRAK GmbH Königsfelder Str. 1 58256 Ennepetal
Tel.: 02333.837-0 Fax: 02333.837-100 www.dirak.com

10.05.2012

© copyright by DIRAK / Germany

6-125SL Slam Latch PrA SNAP-LINE

PICCOLO, Flush doors

Just slightly protruding slam latch.

- Field of application: latching small door or panels.
- To release: after unlocking, just push the upper, clearly marked part of the handle. The lower part then can be pulled-out and this disengages the spring loaded slam-bolt.
- The spring-loaded slam bolt has a free-stroke, allowing slaming of closed and locked handles.

- Installation:
- Enter slam-side into the cutout first and then snap-in the unit.

Material:

- **Housing, Handle and Slam-bolt:** PA, black
- **Cam:** steel, zinc plated
- **Pin:** steel, zinc plated
- **Snap wedges:** sintered steel

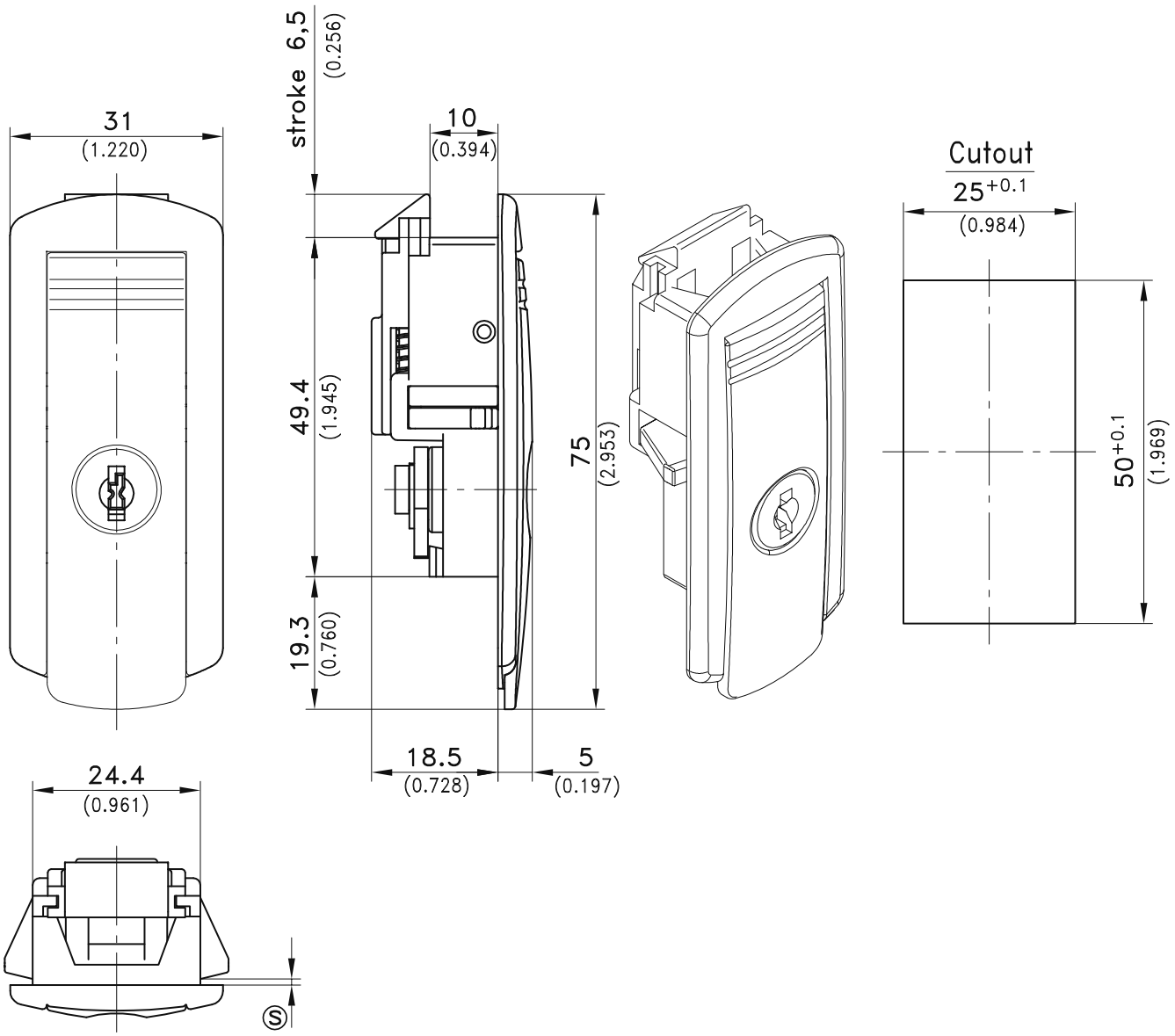

clamping range Ⓢ	with cylinder WITHOUT key	with cylinder WITH 2 keys and ring	without cylinder (blind plug)
1,2 - 1,7	482-9001.00-00015	482-9002.00-00015	482-9003.00-00015
1,7 - 2,2	482-9001.00.00020	482-9002.00-00020	482-9003.00-00020
2,2 - 2,7	482-9001.00-00025	482-9002.00-00025	482-9003.00-00025
2 keys and ring	205-9530.00-23211	-	-
Other Ⓢ - dimension on request!			

04/12/2010
© copyright by DIRAK / Germany

6-127SL Slam Latch SNAP-LINE

flush, clip in

Clip-in low profile Slam latch SNAP-LINE for doors and panels with a sheet metal thickness of 1.5 to 2 mm.

- This Slam latch is mainly designed for ligth duty, applications: e.g. panels for electrical enclosures, A/C and air treatment enclosures.
- The completely pre-assembled latch is slided into the cutout and pushed down by hand into its final position.
- Weight: without cylinder: 33g, with cylinder: 46g

Material:

- **Slam latch, cpl.:** PA, black
- **Leg spring:** stainless steel
- **Spring for slam:** spring steel

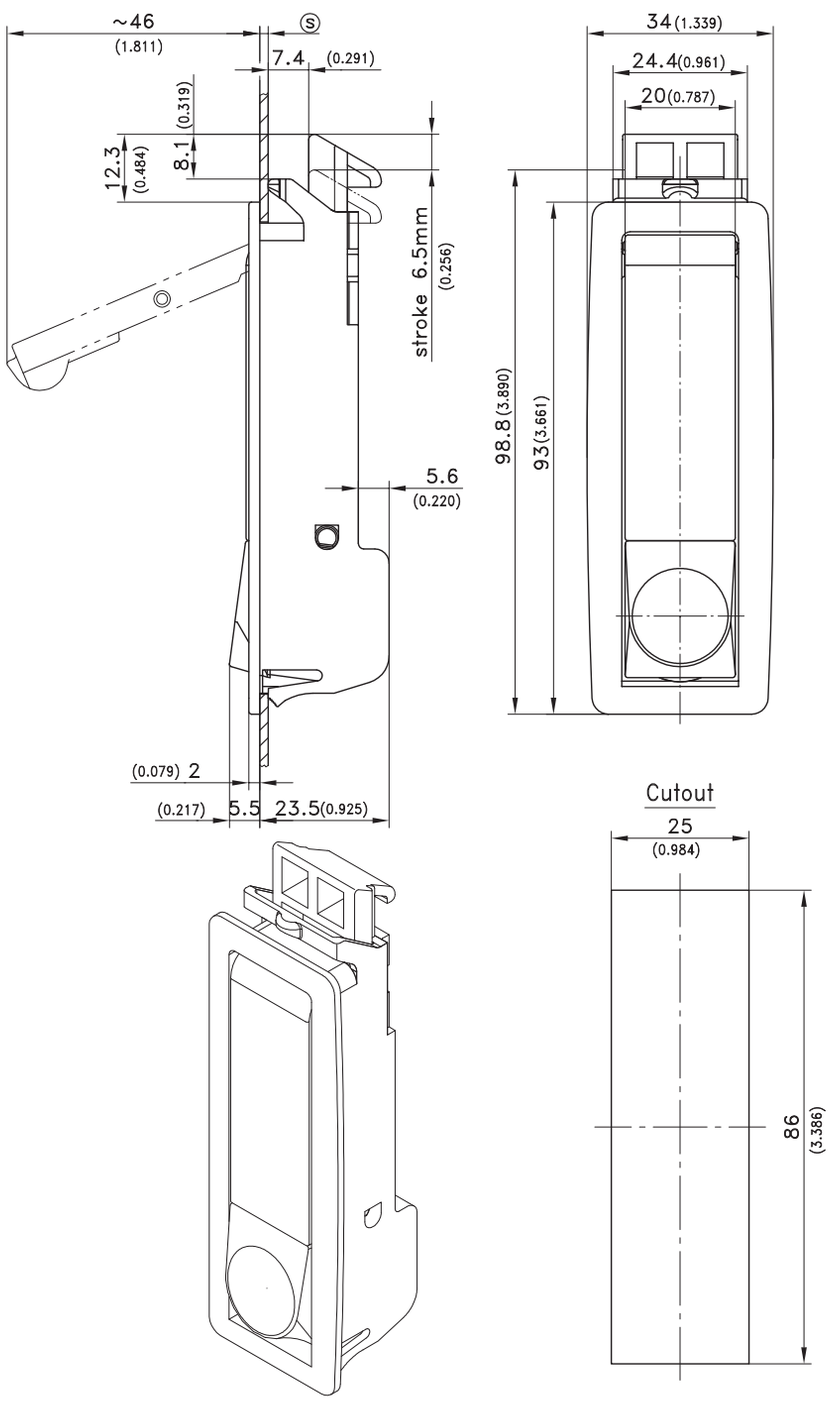

DIRAK GmbH Königsfelder Str. 1 58256 Ennepetal
Tel.: 02333.837-0 Fax: 02333.837-100 www.dirak.com

10.05.2012

© copyright by DIRAK / Germany

6-127SL Slam Latch SNAP-LINE

flush, clip in

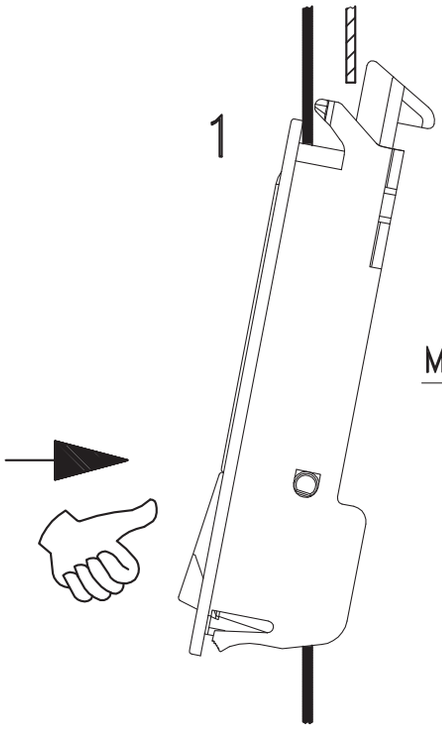

Mounting Instruction

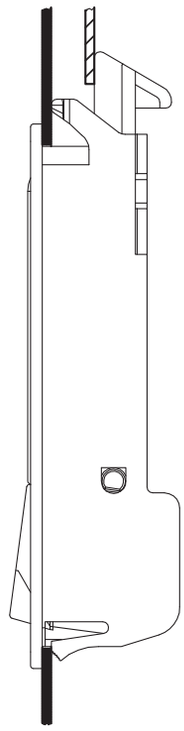

Slide the latch end into the sheet metal....

....push the housing into its final position.

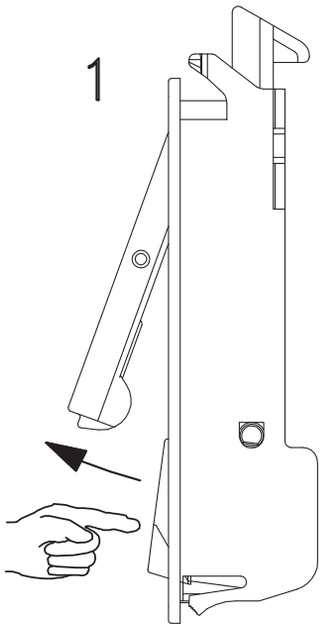

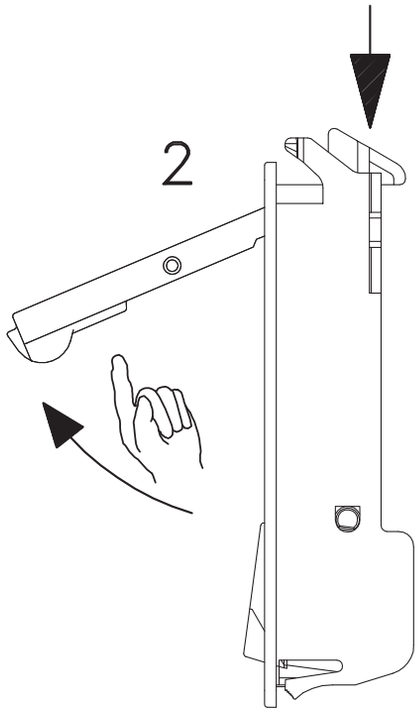

Pressing the trigger button releases the lever and jumps up. The slam latch stays closed.

Lifting the lever opens the latch.

Slam Latch	clamping range Ⓢ from 1.5 (0.059) to 2mm (0.079)
non locking	282-9501
keyed alike DIRAK 1333*	282-9502
keyed different/mixed*	282-9503
* with stainless dust-shutter	

DIRAK GmbH Königsfelder Str. 1 58256 Ennepetal
Tel.: 02333.837-0 Fax: 02333.837-100 www.dirak.com

10.05.2012

© copyright by DIRAK / Germany

Springloaded latch with round bolt

A	B	H	K	S	part number	material	finish	weight
35	43.5	19	10	3.5	**16-1-3647**	steel	zinc plated	21g

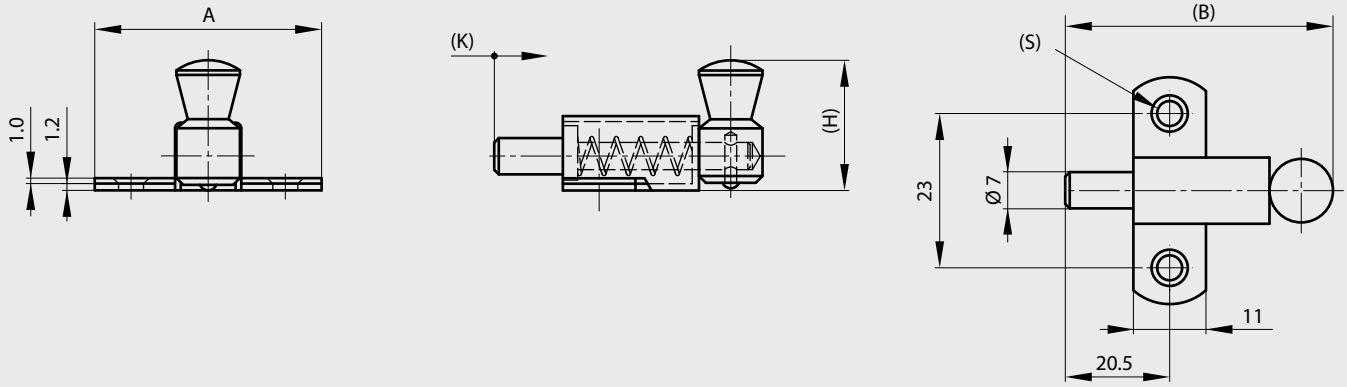

Springloaded latches

Slam latches.

A	B	C	D	E	F	G	H	J	K	S	part number	material	finish	weight
35	36.5	1.2	1	11	13.5	23	19	8	8	3.5	**16-1-3430**	steel	zinc plated	20g
35	36.5	1.2	1	11	13.5	23	19	8	8	3.5	**16-1-3431**	brass	chrome plated	24g
50	56	1.5	1.2	16	20	34	27	12	12	5.5	**16-1-3433**	steel	zinc plated	71g
50	56	1.5	1.2	16	20	34	27	12	12	5.5	**16-1-3434**	brass	chrome plated	75g
70	73	2.0	1.5	22	28	45	38	16	16	7	**16-1-3436**	steel	zinc plated	129g
70	73	2.0	1.5	22	28	45	38	16	16	7	**16-1-3437**	brass	chrome plated	163g

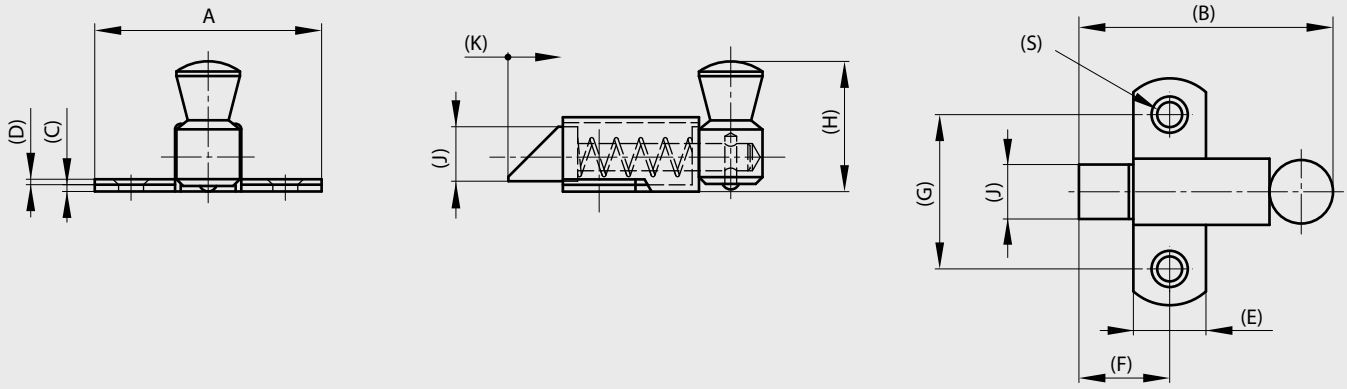

Springloaded latches

Slam latches.

A	B	C	D	E	F	G	H	J	K	S	part number	material	finish	weight
35	36.5	1.2	1	11	13.5	23	19	8	8	3.5	**16-1-3625**	steel	zinc plated	20g
35	36.5	1.2	1	11	13.5	23	19	8	8	3.5	**16-1-3626**	brass	chrome plated	24g
50	56	1.5	1.2	16	20	34	27	12	12	5.5	**16-1-3628**	steel	zinc plated	71g
50	56	1.5	1.2	16	20	34	27	12	12	5.5	**16-1-3629**	brass	chrome plated	75g
70	73	2	1.5	22	28	45	38	16	16	7	**16-1-3631**	steel	zinc plated	129g
70	73	2	1.5	22	28	45	38	16	16	7	**16-1-3632**	brass	chrome plated	163g

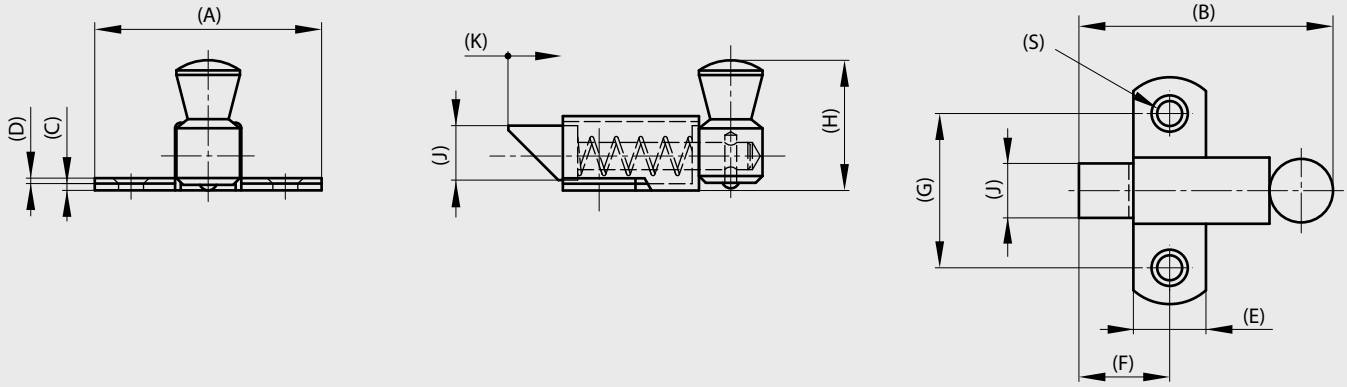

Flat strike for latches with dimension A = 35

A	B	S	part number	material	finish	weight
40	20	2.9	**16-1-3641**	steel	zinc plated	7.5g

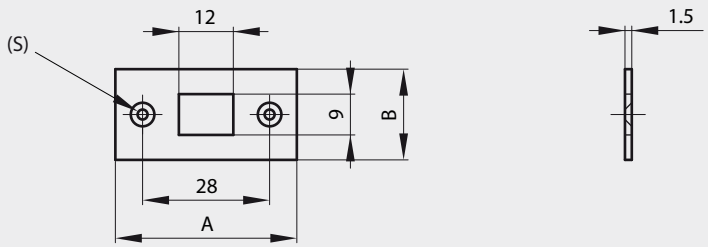

Strikes for latches with dimension A = 35, 50 and 70

A	B	C	D	G	H	S	part number	material	finish	weight
35	11	1.2	11.5	23	11.5	4.3	**16-1-3633**	steel	zinc plated	4.5g
35	11	1.2	11.5	23	11.5	4.3	**16-1-3634**	brass	chrome plated	5g
50	16	1.5	16	34	16	5.2	**16-1-3636**	steel	zinc plated	12g
50	16	1.5	16	34	16	5.2	**16-1-3637**	brass	chrome plated	13g
70	19	2	19	43.5	19	6.2	**16-1-3639**	steel	zinc plated	32g
70	19	2	19	43.5	19	6.2	**16-1-3640**	brass	chrome plated	33g

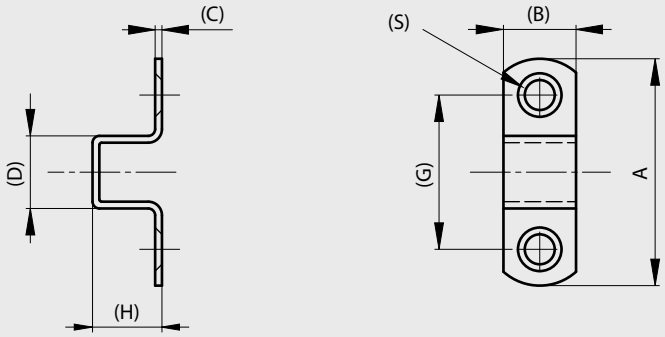

Latch

Stainless steel spring

A	B	H	S	part number	material	finish	weight
44	21	38	4.5	**16-1-3266**	steel	zinc plated	59g

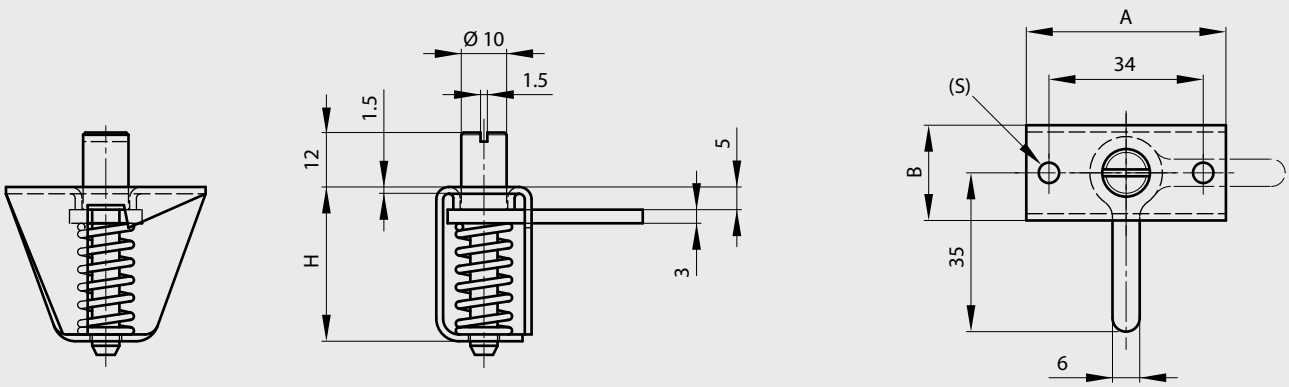

Concealed springloaded pin hinges

Stainless steel spring. Hinges in raw steel and zinc plated steel with a zinc plated pin.

A	B	C	D	K	note	part number	material	finish	weight
82	18.2	2.8	6	12	type 1 as shown below	**12-1-3856**	steel	raw	46.4g
82	18.2	2.8	6	12	type 2 symmetric not shown	**12-1-3857**	steel	raw	46.4g
82	18.2	2.8	6	12	type 1 as shown below	**12-1-3854**	steel	zinc plated	46.4g
82	18.2	2.8	6	12	type 2 symmetric not shown	**12-1-3855**	steel	zinc plated	46.4g
82	18.2	2.8	6	12	type 1 as shown below	**12-1-3858**	304 stainless steel	raw	46.4g
82	18.2	2.8	6	12	type 2 symmetric not shown	**12-1-3859**	304 stainless steel	raw	46.4g

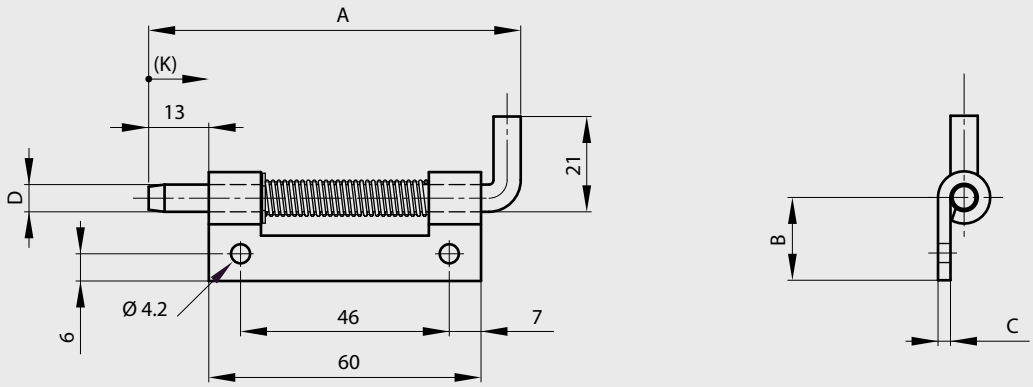

Stainless steel spring

A	B	C	D	K	note	part number	material	finish	weight
82	21	14	5	12	type 1 as shown below	**12-1-3950**	steel	raw	38.5g
82	21	14	5	12	type 2 symmetric not shown	**12-1-3951**	steel	raw	38.5g
82	21	14	5	12	type 1 as shown below	**12-1-3860**	steel	zinc plated	38.5g
82	21	14	5	12	type 2 symmetric not shown	**12-1-3861**	steel	zinc plated	38.5g
82	21	14	5	12	type 1 as shown below	**12-1-3862**	304 stainless steel	raw	38.5g
82	21	14	5	12	type 2 symmetric not shown	**12-1-3863**	304 stainless steel	raw	38.5g

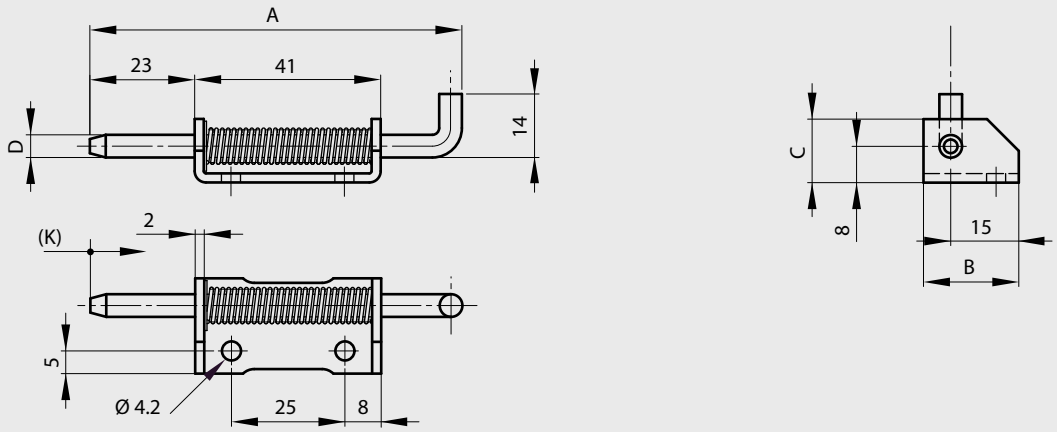

Springloaded bolt with locking system

Heavy duty range

A	B	H	K	S	part number	material	finish	weight
152	75	34	20	9	**16-1-4034**	steel	zinc plated	340g

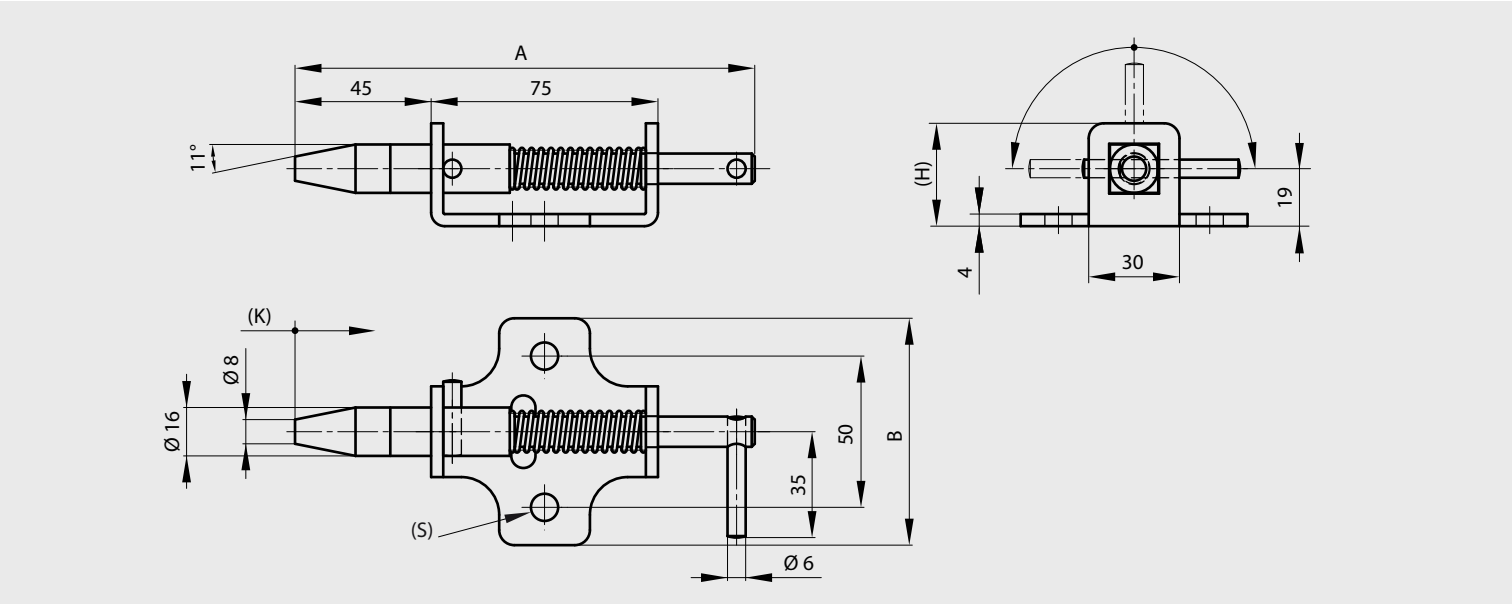

Bolt with locking system

new!

Stop when open. Heavy duty range.

A	B	K	part number	material	finish	weight
132	50	17	**16-1-9007**	steel	zinc plated	172g

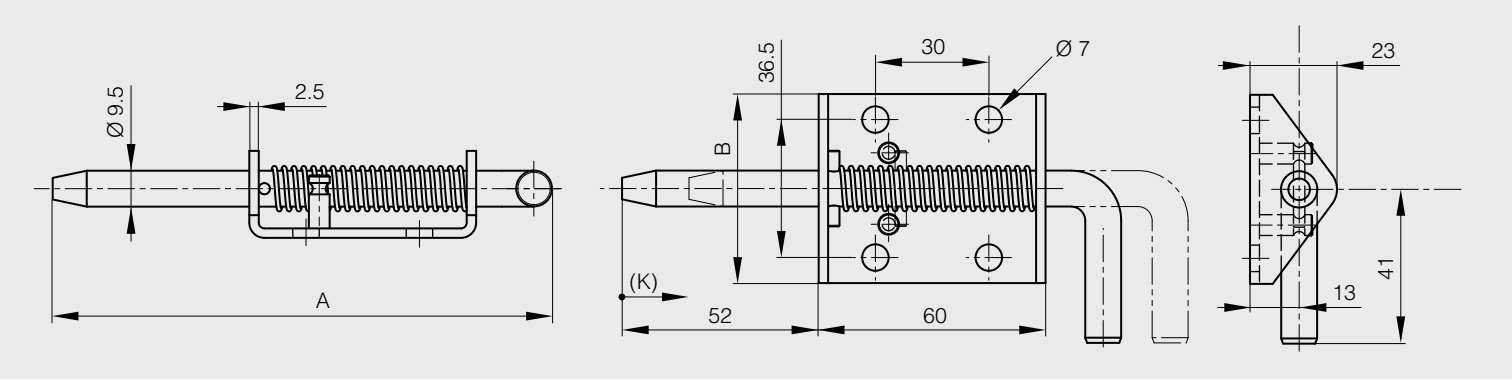

Dual ball catches

METALIKA Locking systems KACIN www.metalika-kacin.com

Coutersunk on both sides of the catch.
Strike can be secured on 4 sides of the catch

A	B	C	D	E	F	G	H	J	K	L	S1	S2	part number	material	finish	weight
50	11	12.5	30	3	40	21	30.5	8.1	18	1.4	4.2	3.5	**16-7-3469**	zinc die-cast	brass	21.5g
60	14.5	14.5	38	3	48	27	42	10	20.1	2.0	4.2	4.2	**16-7-3470**	zinc die-cast	brass	37.5g
70	17.5	16.5	44	3.5	57	34.5	50.5	12	22.3	2.0	4.2	3.2	**16-7-3471**	zinc die-cast	brass	58.8g

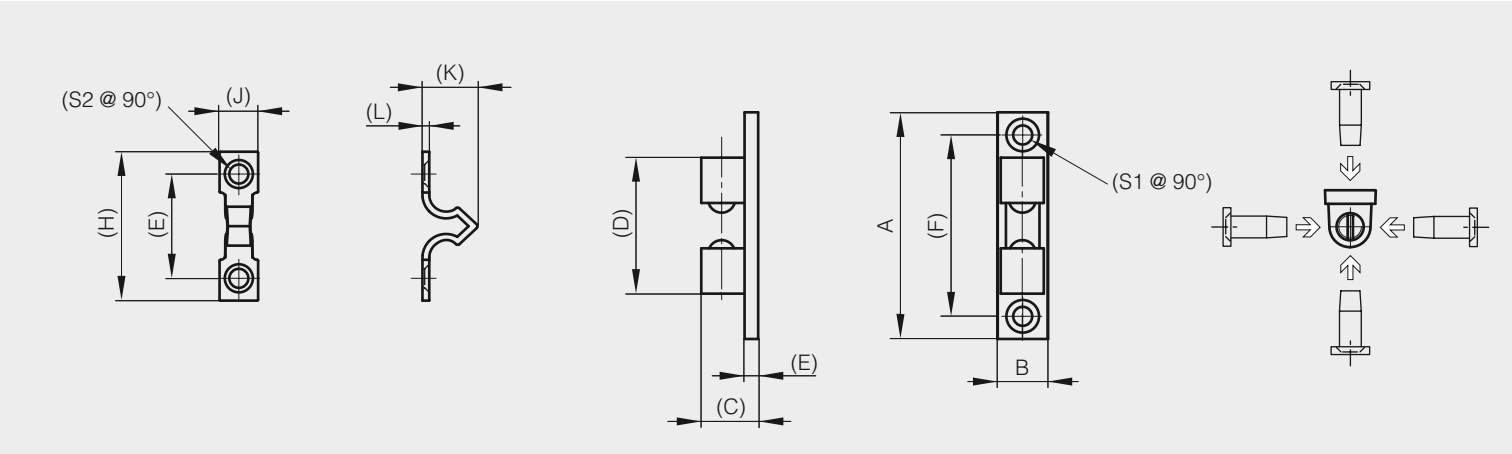

Strike can be secured on 2 sides of the catch

A	B	C	D	E	F	G	H	J	K	L	S1	S2	part number	material	finish	weight
42	8.2	10.6	26	2.9	34	16.9	25	8	14	1.2	3.5	3.0	**16-7-3423**	zinc die-cast	brass	13.7g

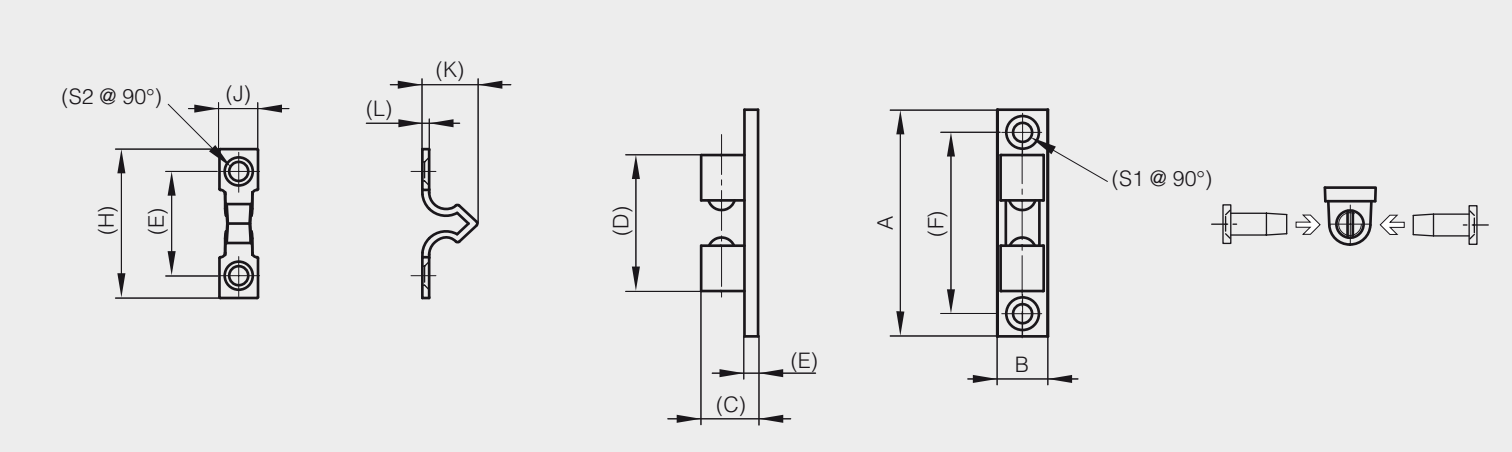

Dual ball catches

new!

METALIKA Locking systems KACIN www.metalika-kacin.com

A	B	C	C1	C2	D	E	F	G	H	J	K	L	S1	S2	force	part number	material	finish	weight
42.5	8	14	10	6.5	26.7	2.5	35	16	25	7.5	11.3	2.5	3.2	6.2	3kg	**16-7-4211**	zinc die-cast	chrome plated	16g
50	10	16	12.5	7.4	29.8	3	40	20	30	9	12.3	2.5	4.2	8.2	3.3kg	**16-7-4212**	zinc die-cast	chrome plated	26g
70	13.5	21.2	17	11	49	4	60	30	42	10.5	17.2	3	4.2	8.2	3.5kg	**16-7-4213**	zinc die-cast	chrome plated	70g

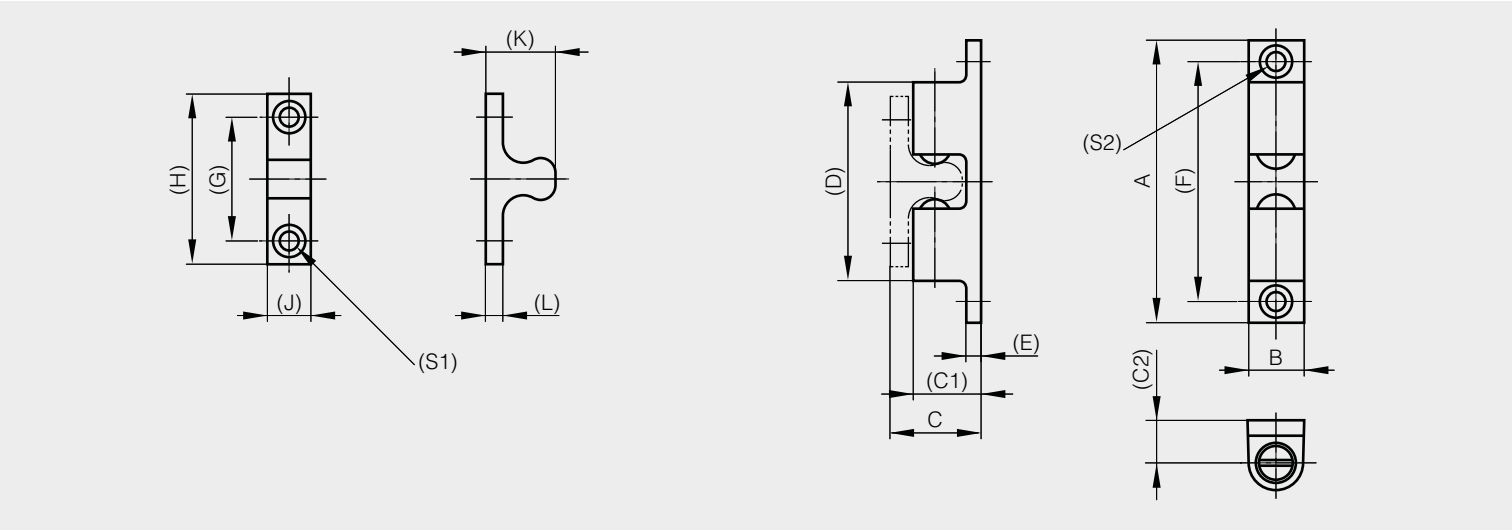

Ball catches

A	B	C	D	E	F	part number	material	finish	weight
8	7.4	4.5	6.5	9	16	**16-7-3330**	brass	raw	3.7g
10	8.5	6.5	8	11	16	**16-7-3331**	brass	raw	6.5g
12	9	7	10	13	19.5	**16-7-3332**	brass	raw	9.9g
13	10.5	7.2	10	14	19.5	**16-7-3333**	brass	raw	13.5g

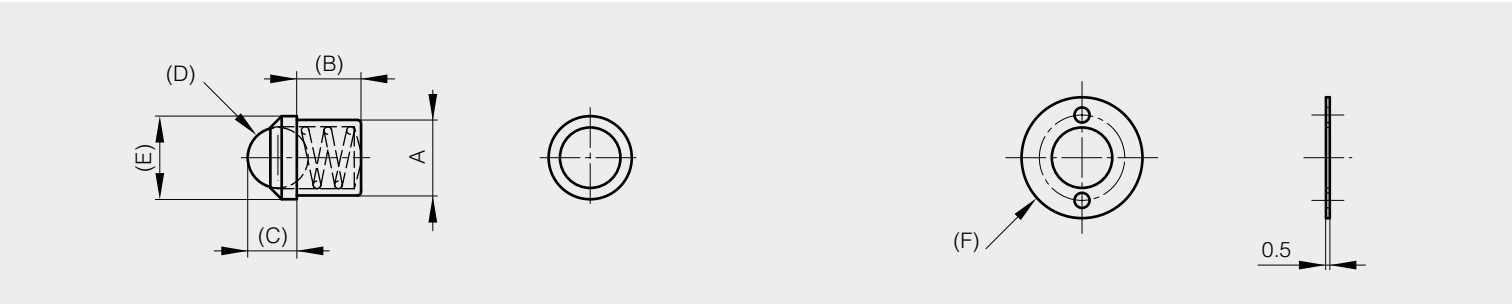

Roller catch without counterplate

Rubber rollers

A	B	force	part number	material	finish	weight
53	14	up to 1.5kg	**16-1-3594**	plastic	white	9g

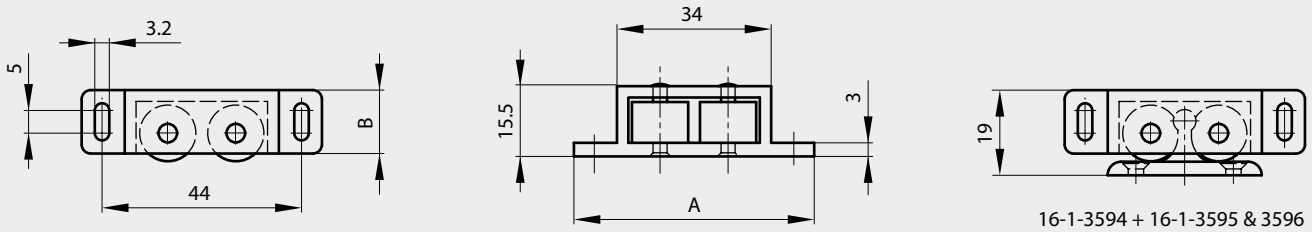

Counterplates for part number 16-1-3594

A	B	note	part number	material	finish	weight
34	10	with pin	**16-1-3595**	plastic	white	1.5g
34	10	without pin	**16-1-3596**	plastic	white	1.5g

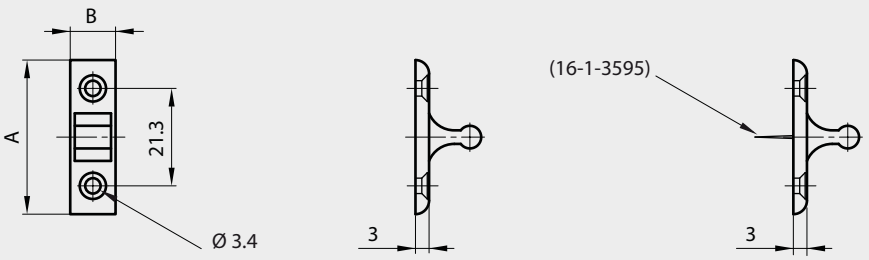

Snap-in knuckle catch

new!

METALIKA Locking systems KACIN www.metalika-kacin.com

Snap-in type body for easy installation on sheet metal applications.
3 panel thicknesses: 0.8mm, 1.0mm and 1.2mm
Cut-out dimensions vary depending on panel thickness.
Internal catch body tolerance of 1.5mm for ease of alignment.

A	B	C	force	part number	material	finish	weight
43	21.2	10	2kg	**16-7-4214**	plastic	white	5.2g

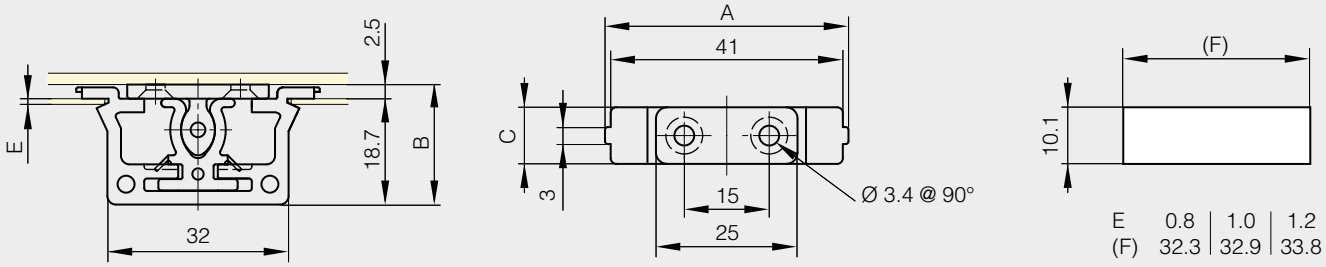

Plastic catch

A	B	C	force	part number	material	finish	weight
35.4	30.5	13	7.1kg	**16-7-3860**	polyamide	white	4.5g

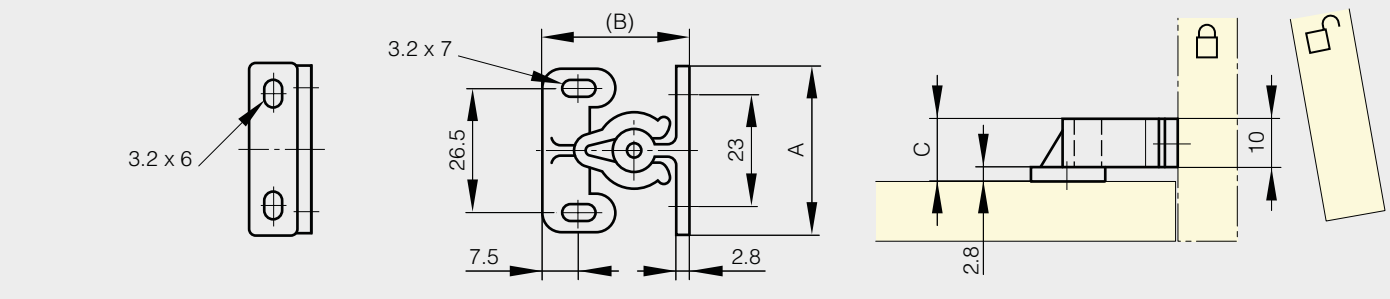

Touch latches

METALIKA KACIN Locking systems
www.metalika-kacin.com

A	C	part number	material	finish	weight
33	11	**16-7-3838**	steel	nickel plated and white plastic	20g

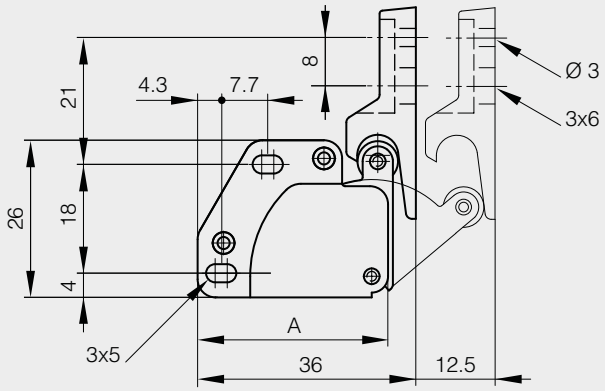

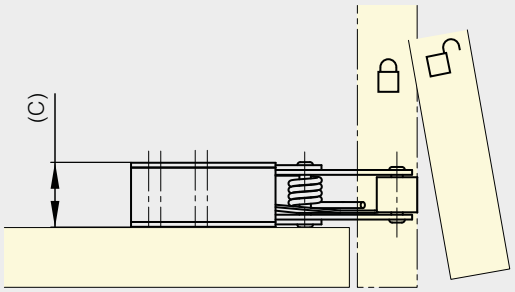

new!

A	B	C	force	part number	material	finish	weight
43	26.5	17.8	10kg	**16-7-4210**	plastic	black	16.3g

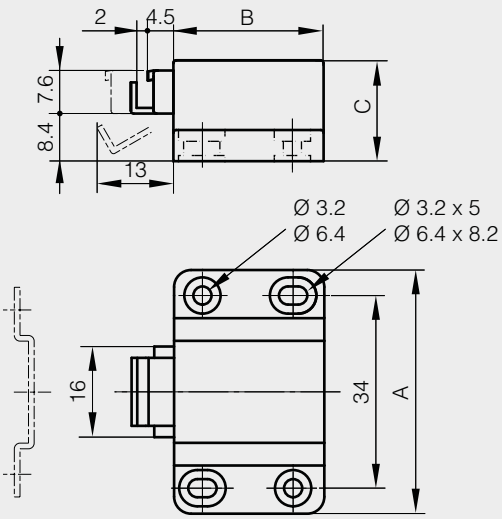

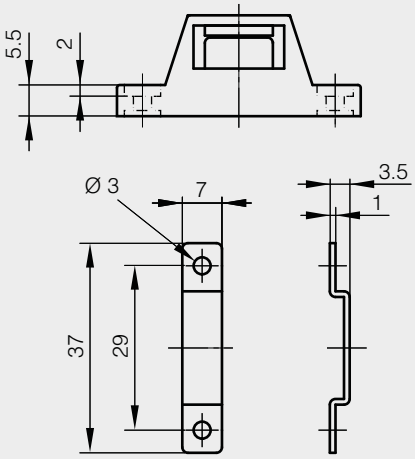

Catch

METALIKA Locking systems KACIN www.metalika-kacin.com

Nylon hook, rubber damper

A	B	force	part number	material	finish	weight
97	39	8kg	**16-1-3271**	steel	zinc plated	100g

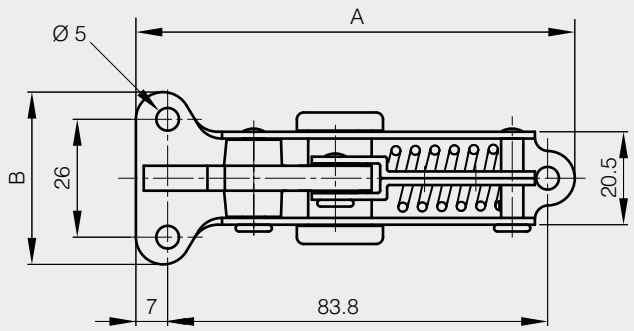

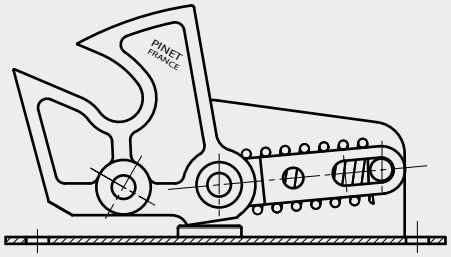

Counterplate for part number 16-1-3271

Nylon roller

A	B	part number	material	finish	weight
62	22	**16-1-3272**	steel	chrome plated	41g

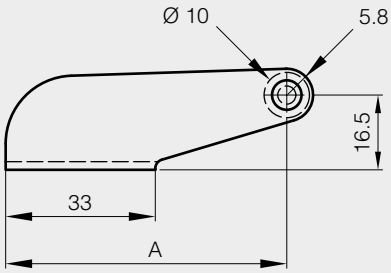

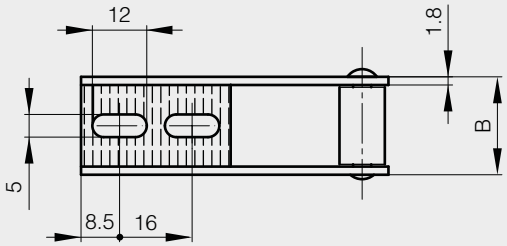

Paddle latches

METALIKA Locking systems KACIN
www.metalika-kacin.com

A	B	note	part number	material	finish	weight
68.5	84	with key	**16-1-4108**	304 stainless steel	raw	184g
68.5	84	without key	**16-1-4107**	304 stainless steel	raw	184g

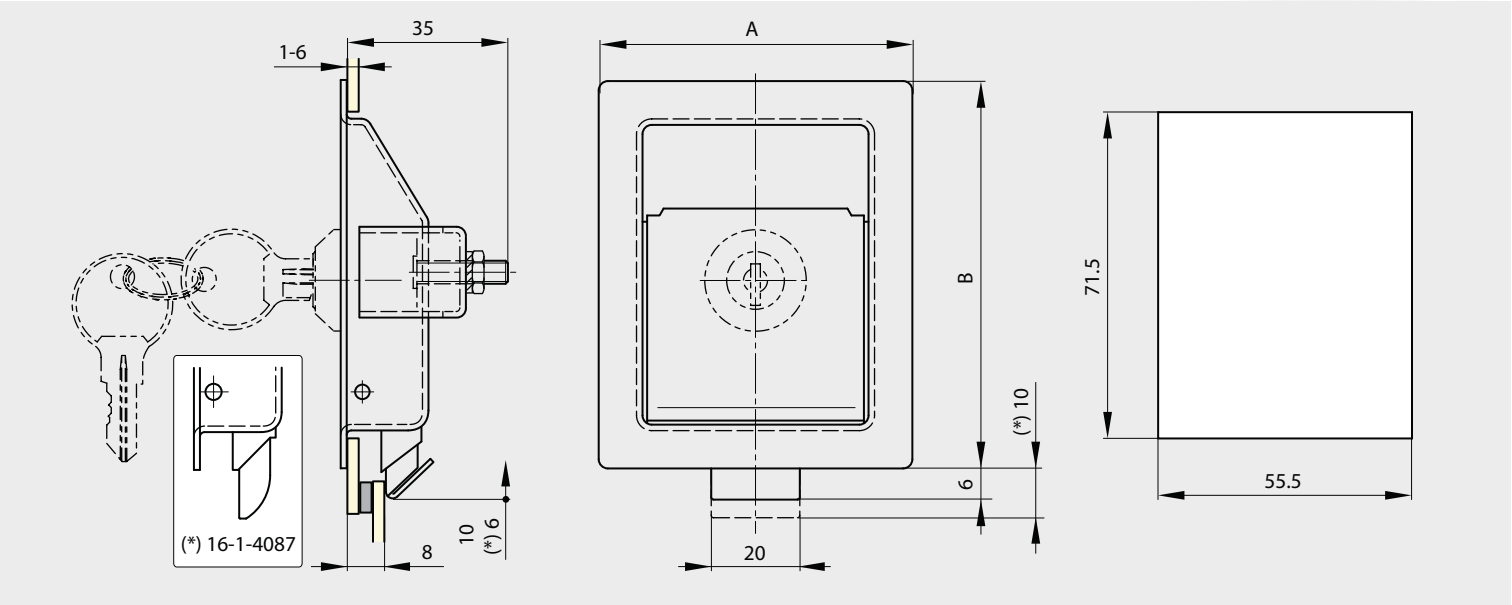

A	B	note	part number	material	finish	weight
41	92	with key	**16-1-4088**	304 stainless steel	brushed	162g

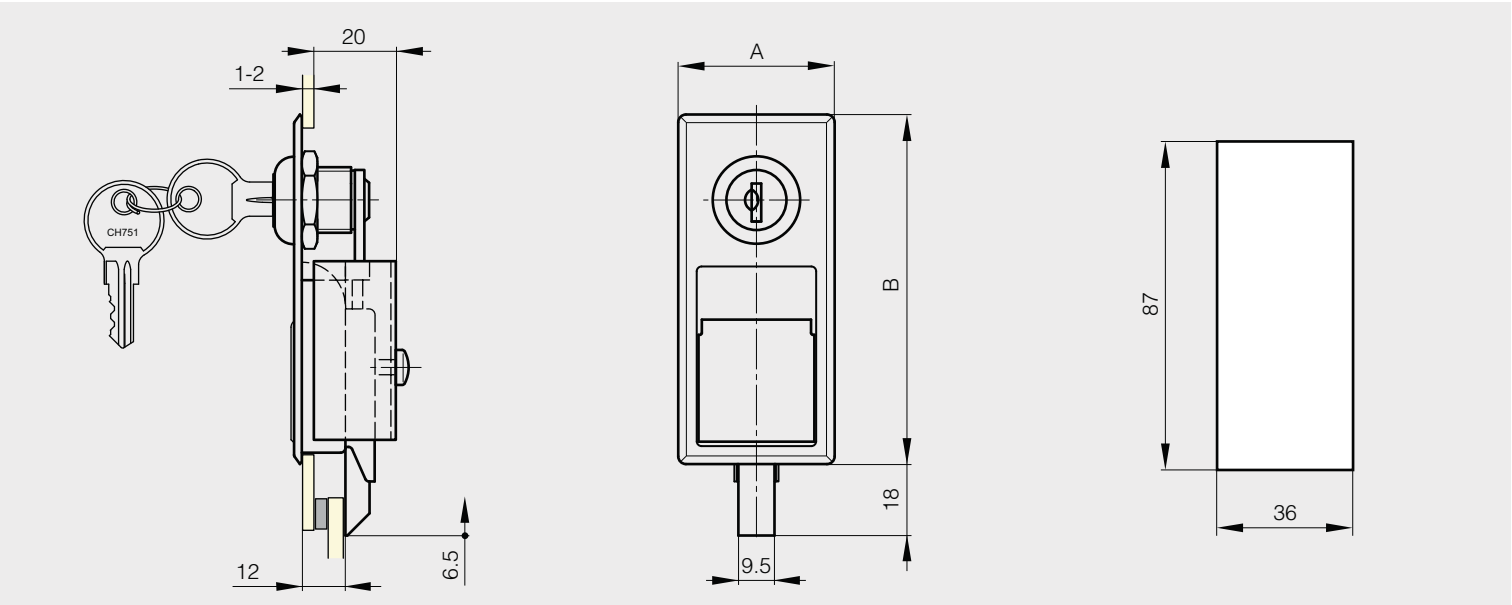

Budget latch

Not handed

A	B	C	W	part number	material	finish	weight
85	17	8.5	90°	**16-1-3972**	304 stainless steel	raw	56g

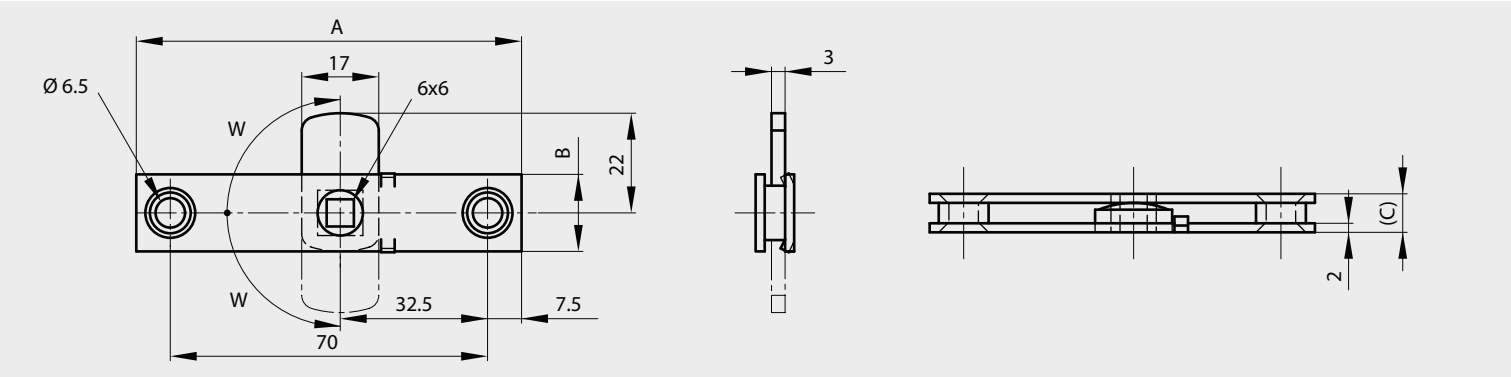

Spring budget latch

Not handed

A	B	C	note	part number	material	finish	weight
85	53.4	8.5	Budget latch (no strike)	**16-1-4031**	304 stainless steel	deburred	69g
85	17	8.5	Strike	**16-1-4032**	304 stainless steel	deburred	48g

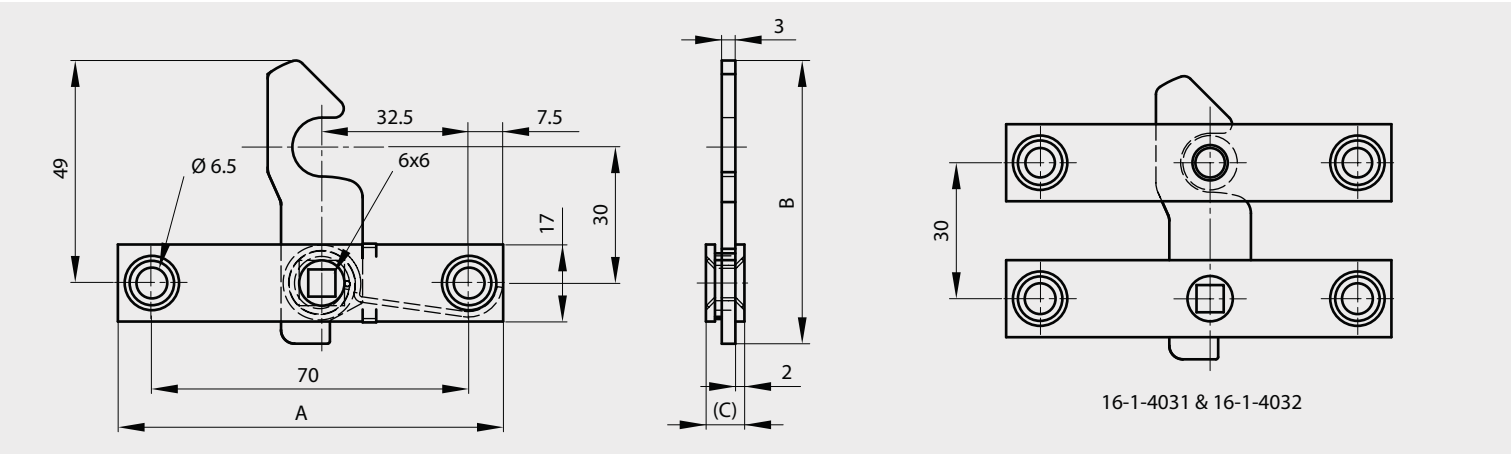

Budget latch

METALIKA Locking systems KACIN www.metalika-kacin.com

Not handed
3 indend positions

A	B	C	W	part number	material	finish	weight
80	19	8	90°	**16-1-4086**	304 stainless steel	raw	63g

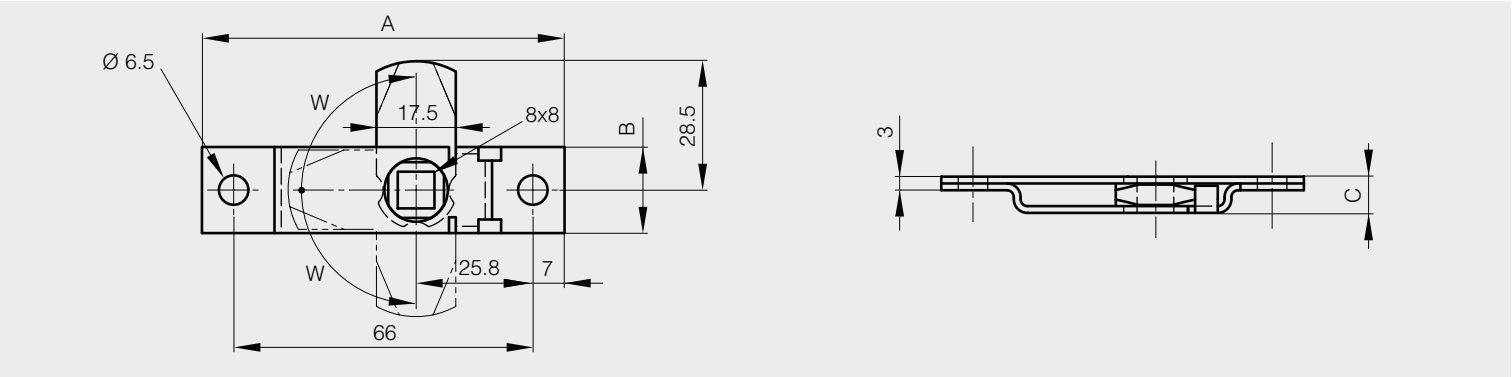

Push barrel bolt

new!

Stainless steel latch with steel shaft and plastic button

A	B	C	part number	material	finish	weight
68	33.5	15	**16-1-9008**	stainless steel	raw	44g

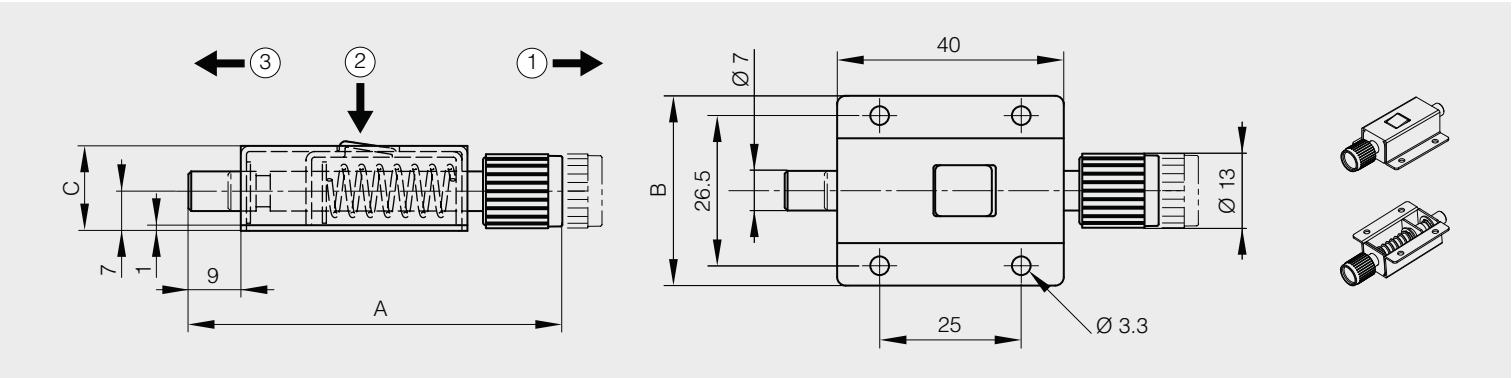

Springloaded bolt

METALIKA Locking systems KACIN www.metalika-kacin.com

Slam blot - reversible

A	B	C	note	part number	material	finish	weight
62	57	15.8	bolt delivered 'nose-down'	**16-7-3835**	304 stainless steel	raw	185g

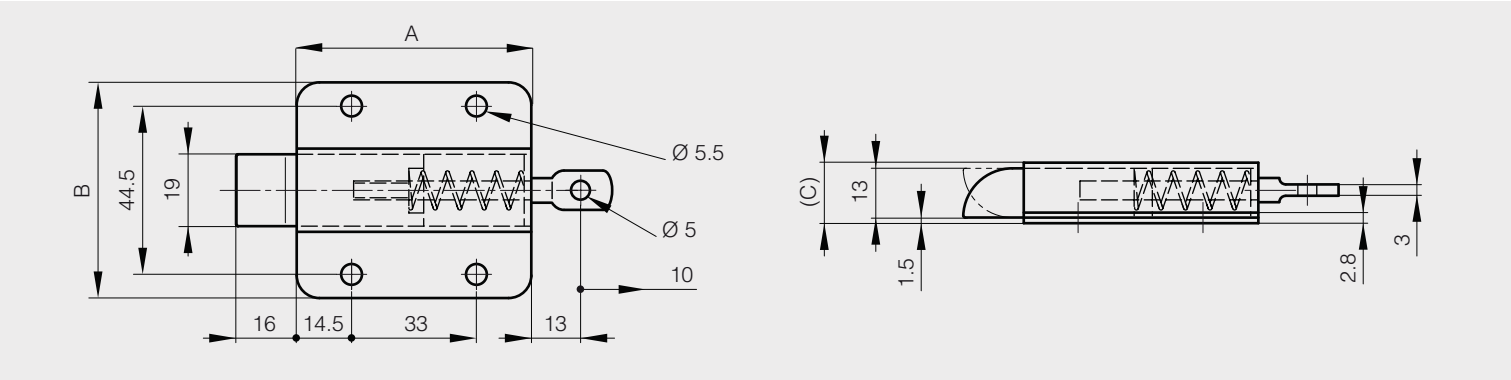

Barrel bolt

Can be fixed in vertical or horizontal position (stop when locked)
Supplied with 2 different strikes (see drawing).
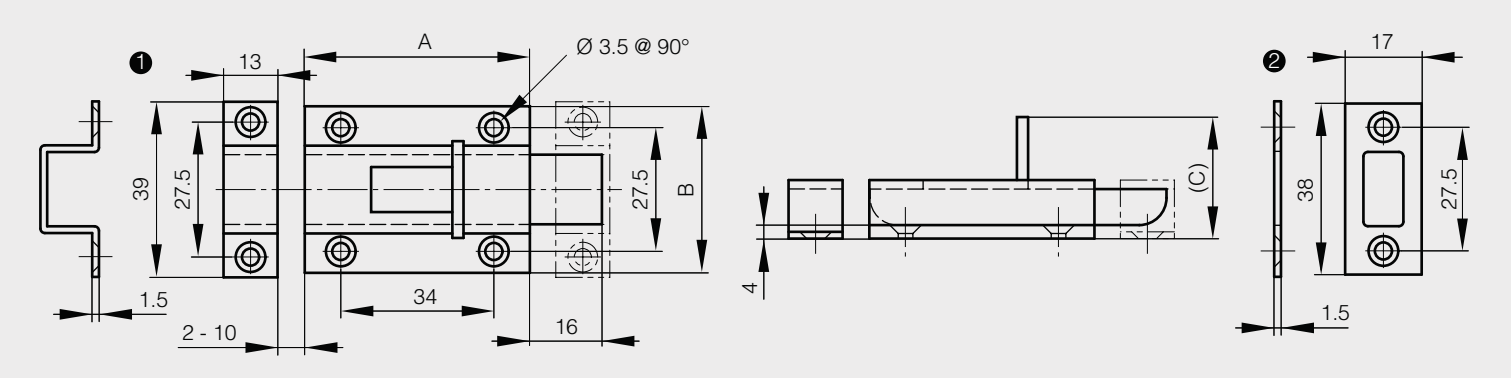
A	B	C	part number	material	finish	weight
50	37	27	**16-7-3863**	304 stainless steel	satin	80g