METALIKA
Tehnika zatvaranja KACIN
Locking and latching systems

RUČKE
metalne
plastične
za kovčege

www.metalika-kacin.com
T/F 011/25 21 756 | srbija@metalika-kacin.com

METALIKA

KOMPONENTE ZA INDUSTRIJU KACIN

RUČKE ZA PRITEZANJE
KUGLASTE DUGMADI
PRITEZNI ZAVRTNJI
NIVELACIONI ZAVRTNJI
ČEPOVI ZA POZICIONIRANJE
RUČNI TOČKOVI - VOLANI

Široki izbor standardnih elemenata za pritezanje i fiksiranje za metalne ormariće, metalna kućišta, metalni nameštaj, za upotrebu kod izrade mašinske opreme, za upotrebu u industriji prerade lima, mašinogradnji i opremanju vozila.

KATALOG PROIZVODA www.metalika-kacin.com

K-00

www.metalika-kacin.com

METALIKA KACIN d.o.o.
Kir Janjina 2
11253 SREMČICA

+381 011/ 25 21 756
+381 062 / 311 768
srbija@metalika-kacin.com

METALIKA KACIN d.o.o.
Kir Janjina 2
SRB - 11253 SREMČICA

+381 011 25 21 756
+381 062 311 768
srbija@metalika-kacin.com

Proizvod:	*Materijal:*	*Grupa:*
Bridge Handle	Poliamide PA-GV	D213

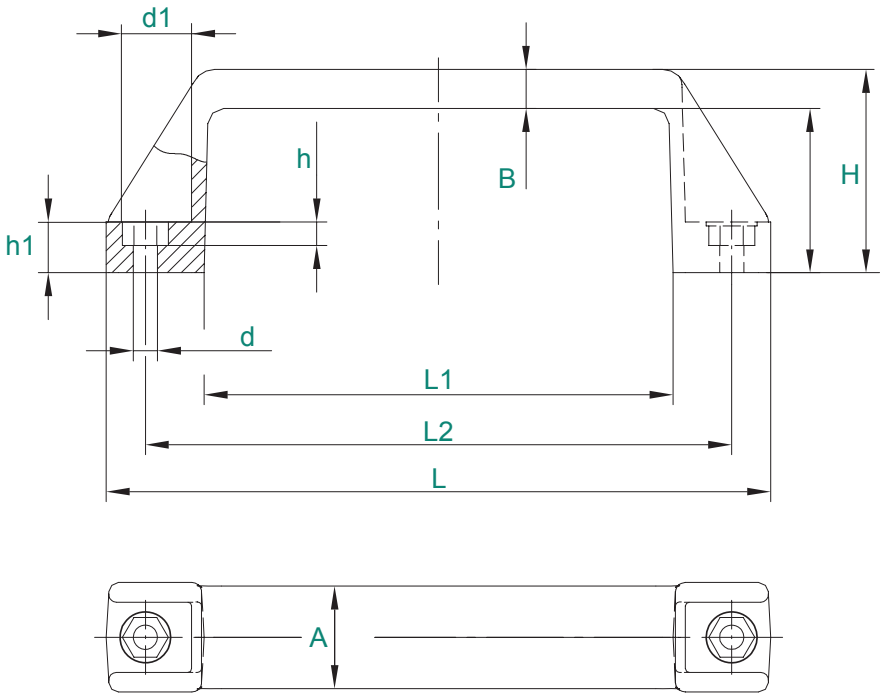

Narudžbeni broj	L	L2	L1	h	h1	d	d1	H	B	A
	mm	mm	mm	mm	mm	mm	mm	mm	mm	mm
M002835	107	93,5	74	7	14	6,5	11	37	7,5	21
M002840	142	122	98	6	12	6,2	12	40	8	24
M002837	136	117	92	7	15	6,5	11	42	8,5	25
M002843	152	133	105	10	18	8,5	14	47	8	25
M002845	197	179	153	9	17	8,5	14	51	9	28

© copyright by METALIKA KACIN // Januar 2016

METALIKA

KOMPONENTE ZA INDUSTRIJU KACIN

BRAVICE
ZATVARAČI
ZAOKRETNE RUČICE
ŠARKE I ŠARNIRI
GUMENI ZAPTIVNI PROFILI
RUČKE RAZLIČITIH OBLIKA
NERĐAJUĆI OKOVI
PRIBOR

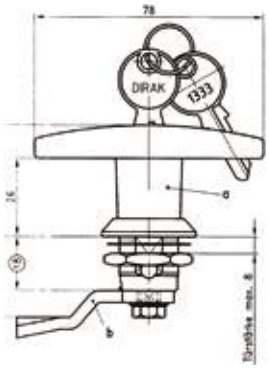

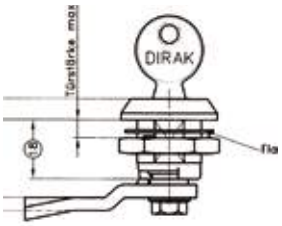

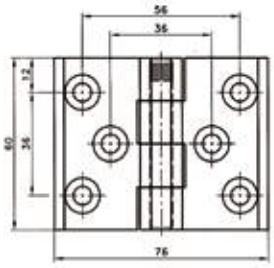

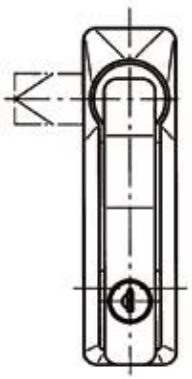

DIRAK®

Široki izbor okova i pribora za proizvodnju prekidnih i upravljačkih ormarića, kućišta za elektroopremu, elektroniku, telekomunikacijsku, tehnološku, klimatsku i drugu tehniku, za ugradnju kod izrade mašinske opreme i vozila.

www.metalika-kacin.com

METALIKA KACIN d.o.o.
Kir Janjina 2
11253 SREMČICA

+381 011/ 25 21 756
+381 062 / 311 768
srbija@metalika-kacin.com

METALIKA

KOMPONENTE ZA INDUSTRIJU KACIN

ŠARKE, ŠARNIRI

Unutrašnje šarke
Spoljašnje šarke
Pljosnate šarke
Šarke sa oprugom
INOX šarke
Šarniri, duge šarke
Šarke za navarivanje
Spone
SNAP LINE šarke

DIRAK®

Široki izbor različitih šarki za industriju.

www.metalika-kacin.com

METALIKA KACIN d.o.o.
Kir Janjina 2
11253 SREMČICA

+381 011/ 25 21 756
+381 062 / 311 768
srbija@metalika-kacin.com

KATALOG PROIZVODA
www.metalika-kacin.com
K-00

METALIKA

KOMPONENTE ZA INDUSTRIJU KACIN

KLAVIRSKE, DUGE ŠARKE
ŠARKE MANJE
ŠARKE RAZNE
BRAVICE, ZAKAČKE, ZATVARAČI
RUČICE, RUČKE
KOPČE

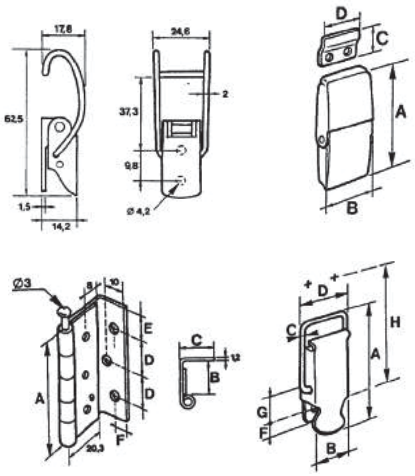

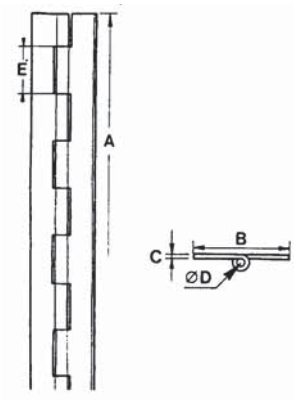

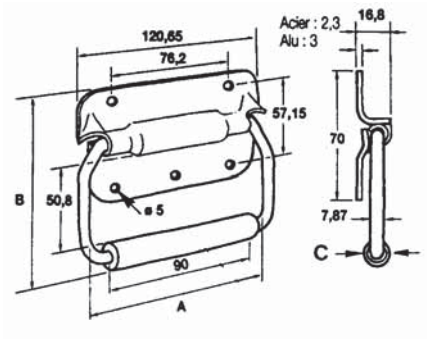

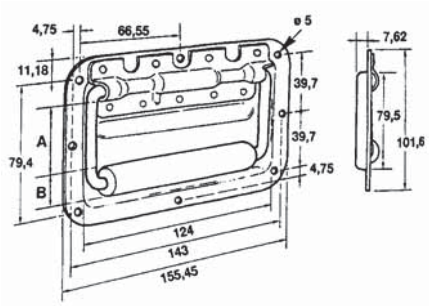

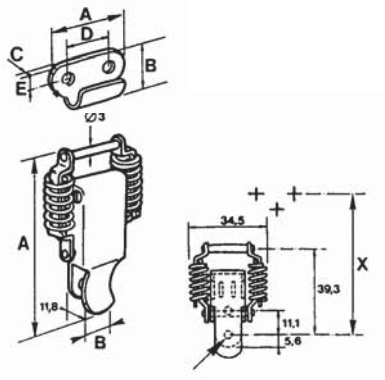

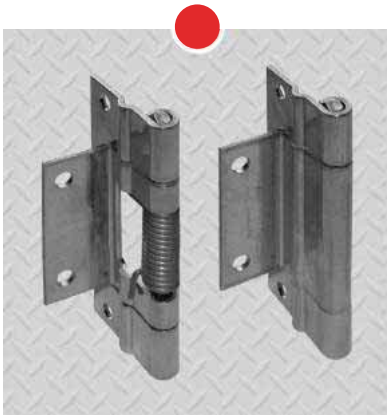

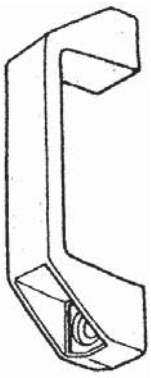

KATALOG PROIZVODA www.metalika-kacin.com
K-00

PIMET

Široki izbor okova i pribora za proizvodnju metalnih ormarića, kućišta za elektroopremu, elektroniku, telekomunikacijsku, tehnološku, klimatsku i drugu tehniku, mašinogradnju.

www.metalika-kacin.com

METALIKA KACIN d.o.o.
Kir Janjina 2
11253 SREMČICA

+381 011/ 25 21 756
+381 062 / 311 768
srbija@metalika-kacin.com

METALIKA KACIN d.o.o.
Kir Janjina 2
11253 SREMČICA

+381 011 / 25 21 756
+381 062 / 311 768
srbija@metalika-kacin.com

METALIKA
COMPONENTS FOR INDUSTRY KACIN
www.metalika-kacin.com

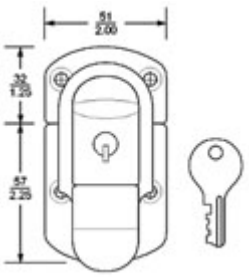

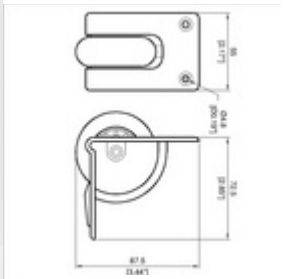

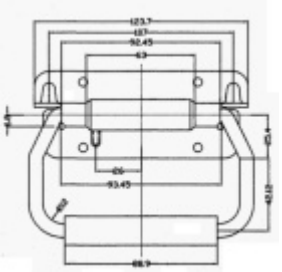
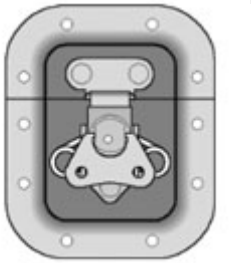

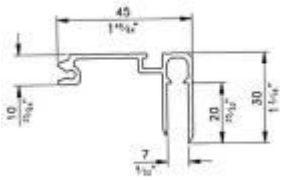

Pribor za kovčege

Ugaoniki

Zatvarači za kovčege

Šarke za kovčege

AL-profili

Ručke za zvučnike

Točkovi za kovčege

Gumene nogice

Penasti ulošci

Materijal za građenje kovčega

Ulošci za transport reflektora

Priključne ploče

Utičnice za zvučnike

Široki izbor **okova i pribora za izradu kovčega**,
zvučnika i različitih transportnih kućišta za industriju i zanat.
Kompletna ponuda za izradu svih vrsta boksova,
uključno sa zaštitnim pločama i dekoracijskim materijalom.

www.metalika-kacin.com

DIRAK
www.dirak.com

6-1000 Bridge Handle

Polyamide, with plugs

METALIKA Locking Systems KAÇIN www.metalika-kacin.com

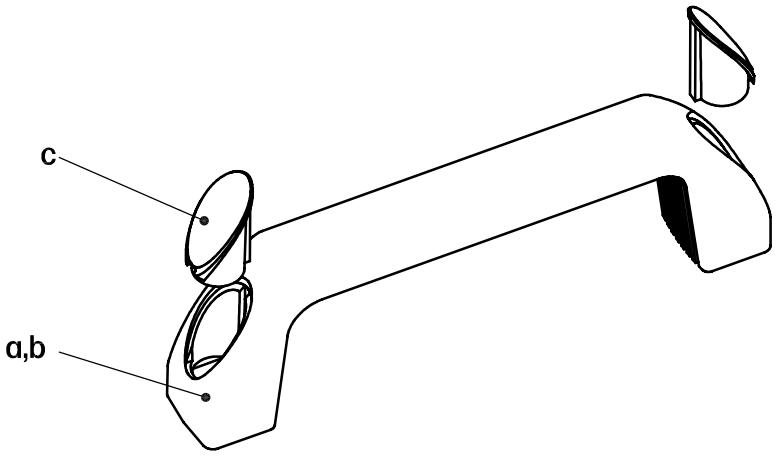

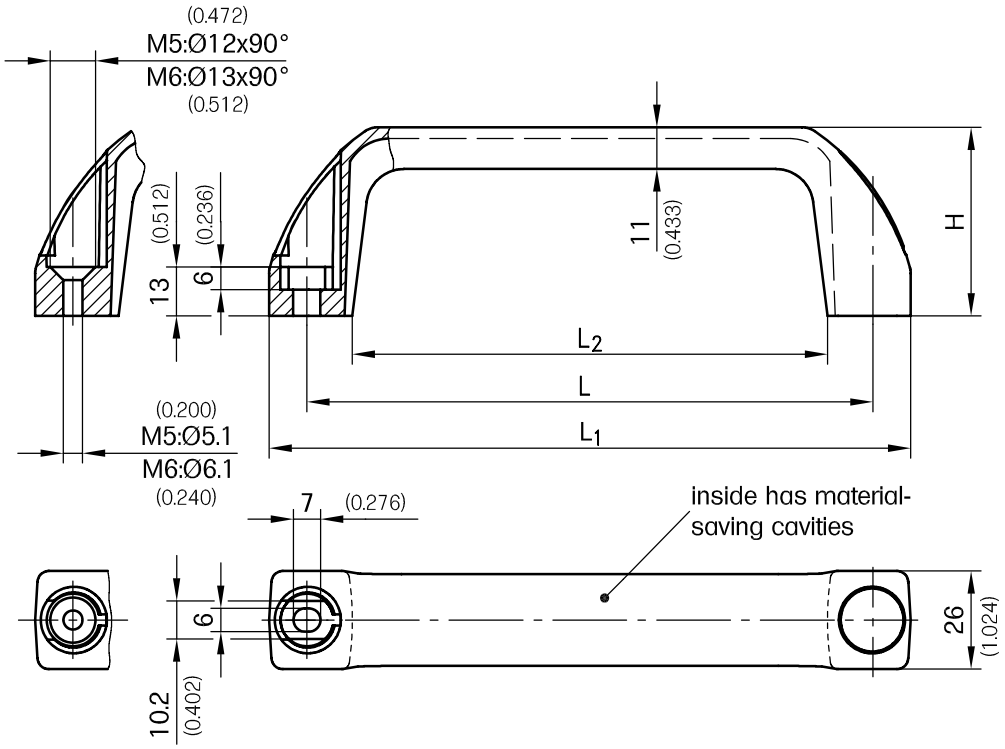

Polyamide handle, two sizes.

- Fastening by hex. socket head cap screws, or hex. screws or with countersunk screws.
- Plugs in different colors or with logo on request.

Material:

- PA, black

			L	L_1	L_2	H	Part No.
a) Polyamide handle complete, with 2 plugs							
a_1) for hex. socket head cap screws / hex. screws	M6		150/5.906	170/6.693	126/4.961	50/1.969	**213-9201**
a_2) for countersunk screws	M5		150	170	126	50	**213-9202**
a_3) for hex. socket head cap screws / hex. screws	M6		122/4.803	142/5.591	98/3.543	50	**213-9203**
a_4) for countersunk screws	M5		122	142	98	50	**213-9204**
a_5) for countersunk screws	M6		122	142	98	50	**213-9205**
a_6) for hex screws	M6		122	142	98	41/1.614	**213-9206**
a_7) for countersunk screws	M5		122	142	98	41	**213-9207**
b) Polyamide handle only (without plugs)							
b_1) for hex. socket head cap screws / hex. screws	M6		150	170	126	50	**213-0205.03**
b_2) for countersunk screws	M5		150	170	126	50	**213-0206.03**
b_3) for hex. socket head cap screws / hex. screws	M6		122	142	98	50	**213-0208.03**
b_4) for countersunk screws	M5		122	142	98	50	**213-0209.03**
b_5) for countersunk screws	M6		122	142	98	50	**213-0210.03**
c) Plugs (2 plugs per handle) PA black							**213-0207.03**

Fitting hardware see product system 6-041.

DIRAK RoHS WEEE compliant

12/16/08

© copyright by DIRAK / Germany

DIRAK GmbH - Königsfelder Str. 1 - D-58256 Ennepetal - Phone: +49 (0) 2333/837-0 - Fax: +49 (0) 2333/837-100

DIRAK
www.dirak.com

6-1001SL Bridge Handle SNAP-LINE

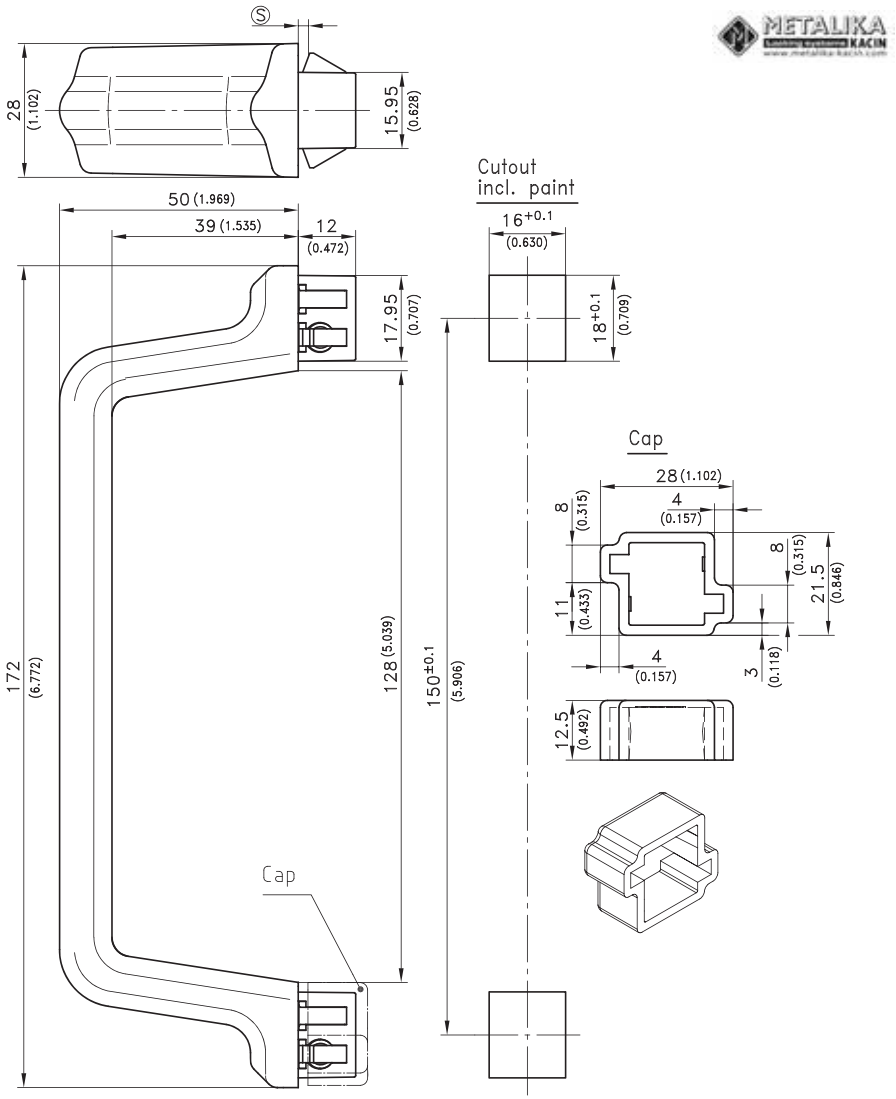

	clamping range Ⓢ	Part No.
Bridge Handle 172mm (6.772)	0.8 - 1.5	**413-9004.00-00015**
	1.3 - 2.0	**413-9004.00-00020**
	2.0 - 2.7	**413-9004.00-00027**
Cap		**413-0901.54-00000**

Other Ⓢ - dimensions on request!

© copyright by DIRAK / Germany

DIRAK GmbH - Königsfelder Str. 1 - D-58256 Ennepetal - Phone: +49 (0) 2333/837-0 - Fax: +49 (0) 2333/837-100

DIRAK
www.dirak.com

6-1001SL Bridge Handle SNAP-LINE

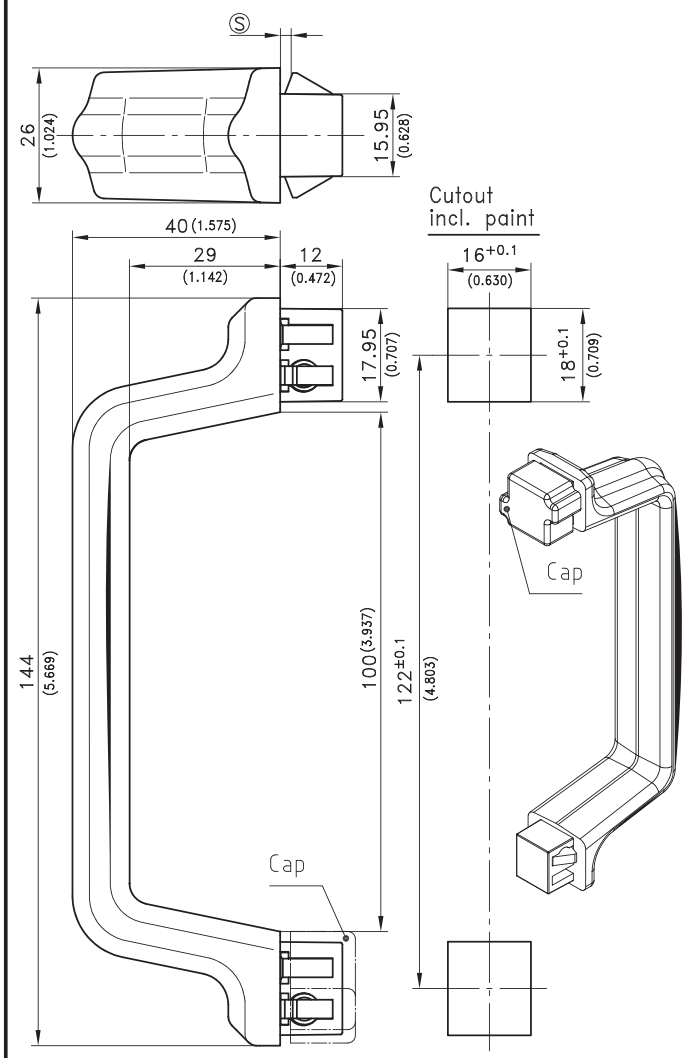

Polyamide handle, two sizes.

- The appealing design guarantees a firm and reliable grab.
- The closed surface makes it insensitive to dirt and easy to clean.
- Lowest inside radius 5mm.
- Designed for vertical or horizontal uses.
- The installation is effected by a simple push into appropriate cutouts.

Handle for variable lengths in the same design see product system 6-1600SL.

Material:

- **Bridge Handle:** PA, black
- **Snap wedges:** sintered steel
- **Spring:** spring steel
- **Cap:** PA black

	clamping range Ⓢ	Part No.
Bridge Handle 144mm (5.669)	0.8 - 1.5	**413-9003.00-00015**
	1.3 - 2.0	**413-9003.00-00020**
	2.0 - 2.7	**413-9003.00-00027**
Cap		**413-0901.54-00000**

Other Ⓢ - dimensions on request!

12/15/08

© copyright by DIRAK / Germany

DIRAK GmbH - Königsfelder Str. 1 - D-58256 Ennepetal - Phone: +49 (0) 2333/837-0 - Fax: +49 (0) 2333/837-100

DIRAK
www.dirak.com

6-1031 Bridge Handle
Polyamide

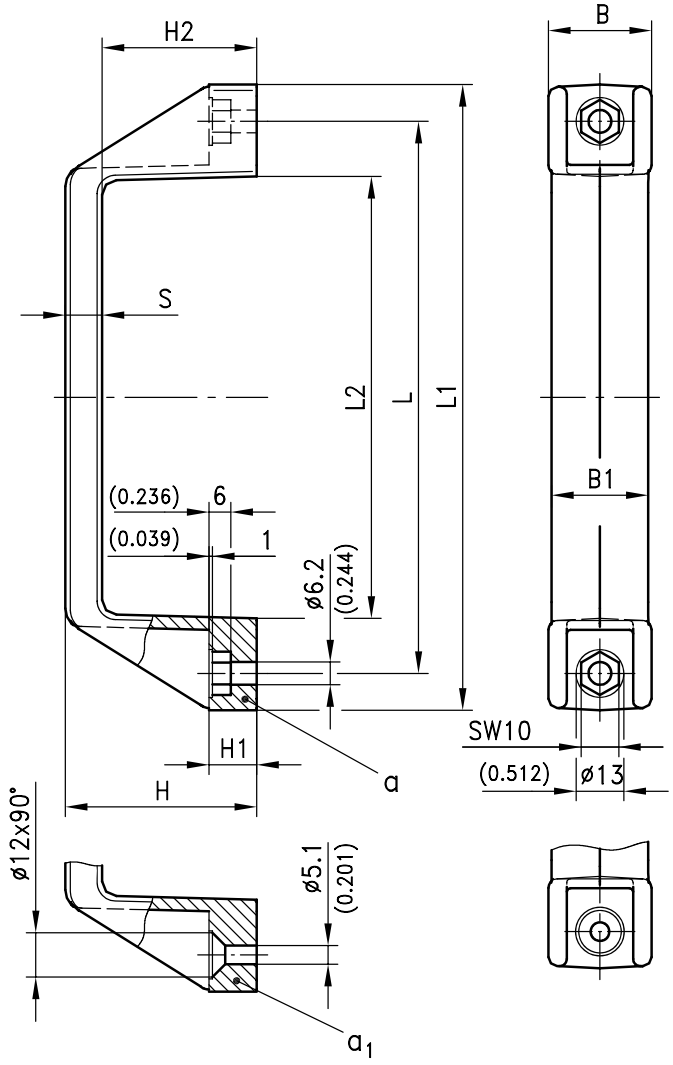

Polyamide handle, two sizes.

- Fastening with cap screws or hexagon head screws (version a) or with countersunk head screws (version a_1).
- **New versions please refer to product system 6-242**

Material:
a) and a_1)
- PA, black

Version a) with hexagon socket M6									
L	**L1**	**L2**	**B**	**B1**	**H**	**H1**	**H2**	**S**	**Part-No.**
122/4.803	142/5.591	98/3.858	26/1.024	24/0.945	40/1.575	12/0.472	32/1.260	8/0.315	**213-0201.03**

Version a_1) with countersunk M5									
L	**L1**	**L2**	**B**	**B1**	**H**	**H1**	**H2**	**S**	**Part-No.**
122/4.803	142/5.591	98/3.858	26/1.024	24/0.945	40/1.575	12/0.472	32/1.260	8/0.315	**213-0202.03**

Version a) with hexagon socket M6									
L	**L1**	**L2**	**B**	**B1**	**H**	**H1**	**H2**	**S**	**Part-No.**
150/5.906	170/6.693	120/4.724	28/1.102	26/1.024	52/2.047	13/0.512	42/1.654	10/0.394	**213-0203.03**

Version a_1) with countersunk M5									
L	**L1**	**L2**	**B**	**B1**	**H**	**H1**	**H2**	**S**	**Part-No.**
150/5.906	170/6.693	120/4.724	28/1.102	26/1.024	52/2.047	13/0.512	42/1.654	10/0.394	**213-0204.03**

Installation hardware see product system 6-041.

12/16/08

© copyright by DIRAK / Germany

DIRAK
www.dirak.com

6-1102 Bridge Handle
Aluminium

METALIKA Locking systems KACIN
www.metalika-kacin.com

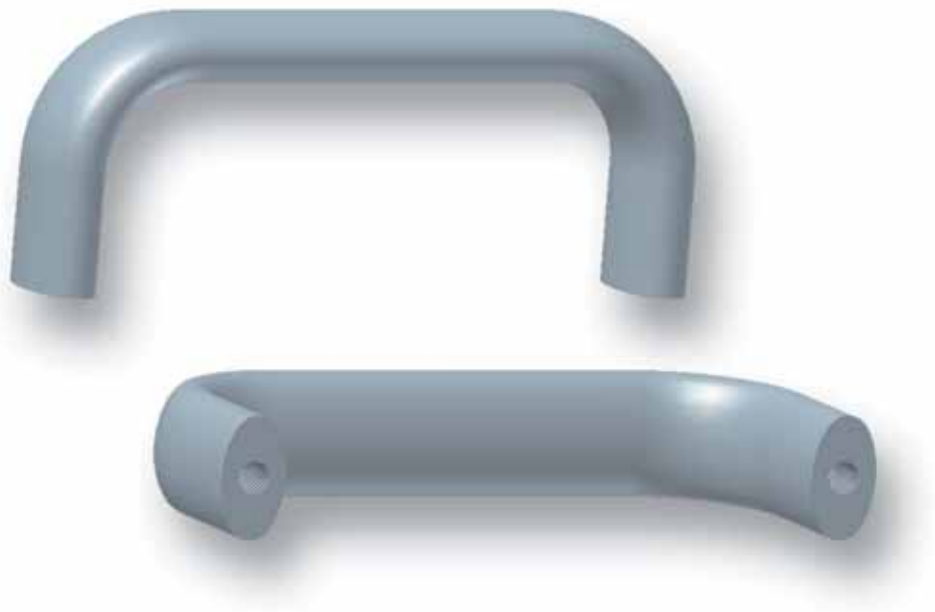

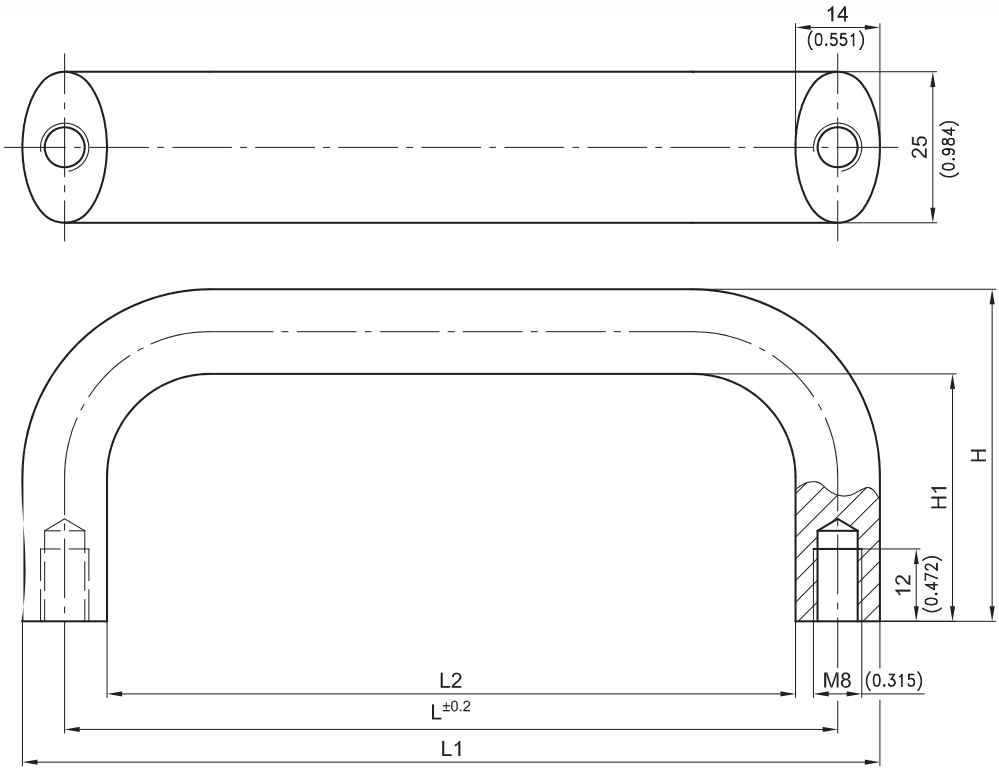

Solid aluminium Handle, modern industrial design.

- Handles for hospital equipment, medical and food processing technology.
- Designed for vertical or horizontal uses.
- Fastening by M8 screws.

Material:

- aluminium, anodized (AlMgSi 0,5)

Other surfaces on request.

						Aluminium
Bridge Handle, ellipse	**L**	**L1**	**L2**	**H**	**H1**	**anodized**
mm / inch	112 / 4.409	126 / 4.961	98 / 3.858	55 / 2.165	41 / 1.614	**213-0514.96-00112**
	128 / 5.039	142 / 5.591	114 / 4.488	55 / 2.165	41 / 1.614	**213-0514.96-00128**
	160 / 6.299	174 / 6.850	146 / 5.748	55 / 2.165	41 / 1.614	**213-0514.96-00160**
	192 / 7.559	206 / 8.110	178 / 7.008	55 / 2.165	41 / 1.614	**213-0514.96-00192**
	300 / 11.811	314 / 12.362	286 / 11.260	55 / 2.165	41 / 1.614	**213-0514.96-00300**

DIRAK RoHS/WEEE compliant

12/16/08

© copyright by DIRAK / Germany

DIRAK GmbH - Königsfelder Str. 1 - D-58256 Ennepetal - Phone: +49 (0) 2333/837-0 - Fax: +49 (0) 2333/837-100

DIRAK
www.dirak.com

6-1103 Bridge Handle
Aluminium

METALIKA Locking systems KACIN
www.metalika-kacin.com

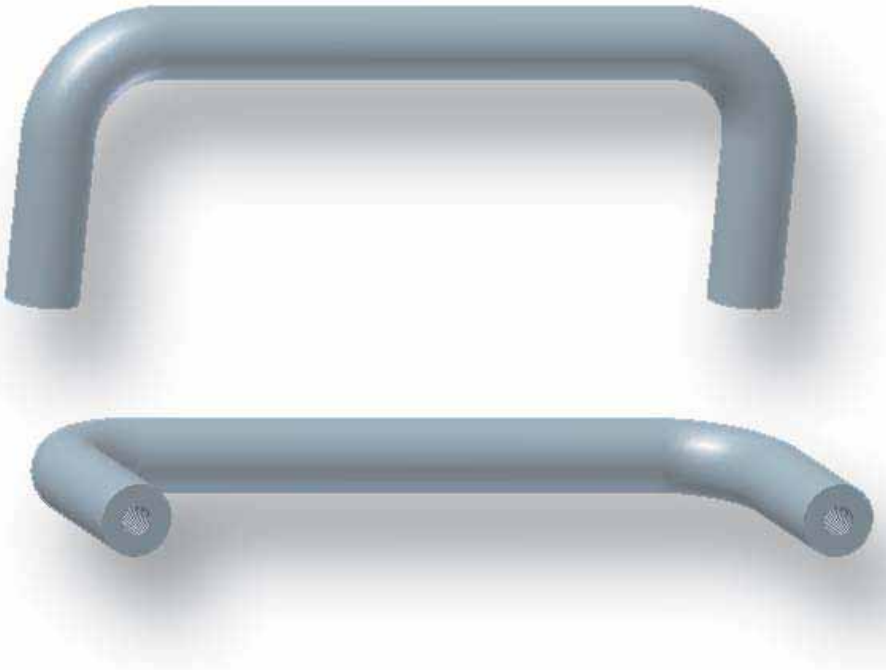

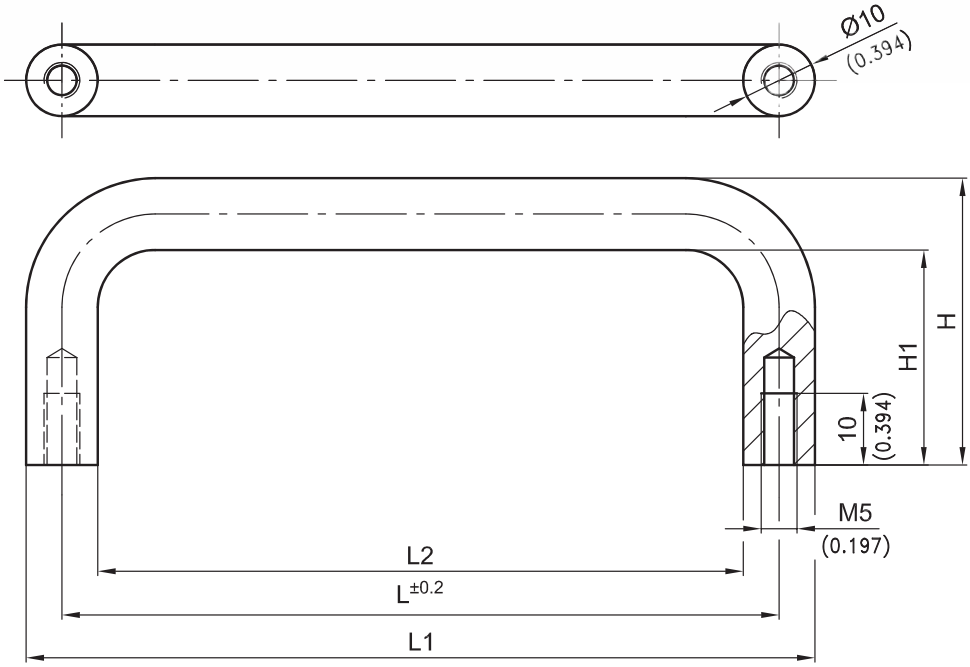

Solid aluminium Handle, modern industrial design.

- Handles for hospital equipment, medical and food processing technology.
- Designed for vertical or horizontal uses.
- Fastening by M5 screws.

Material:

- aluminium, anodized (AlMgSi 0,5)

Other surfaces on request.

Bridge Handle, round	L	L1	L2	H	H1	Aluminium anodized
mm / inch	100 / 3.937	110 / 4.331	90 / 3.543	40 / 1.575	30 / 1.181	**213-0517.96-00100**

DIRAK RoHS WEEE compliant

12/16/08

© copyright by DIRAK / Germany

DIRAK GmbH - Königsfelder Str. 1 - D-58256 Ennepetal - Phone: +49 (0) 2333/837-0 - Fax: +49 (0) 2333/837-100

DIRAK
www.dirak.com

6-1104 Bridge Handle
Aluminium

METALIKA Locking systems KACIN
www.metalika-kacin.com

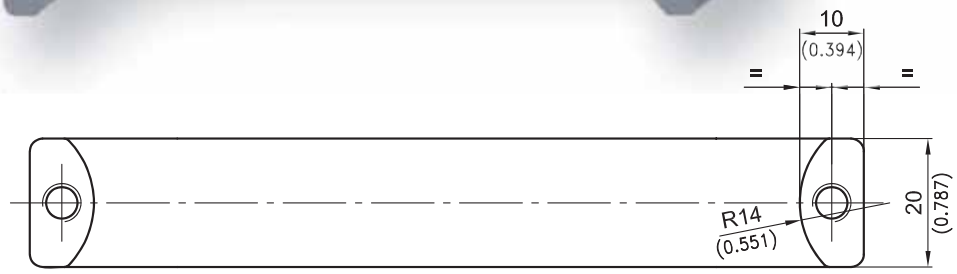

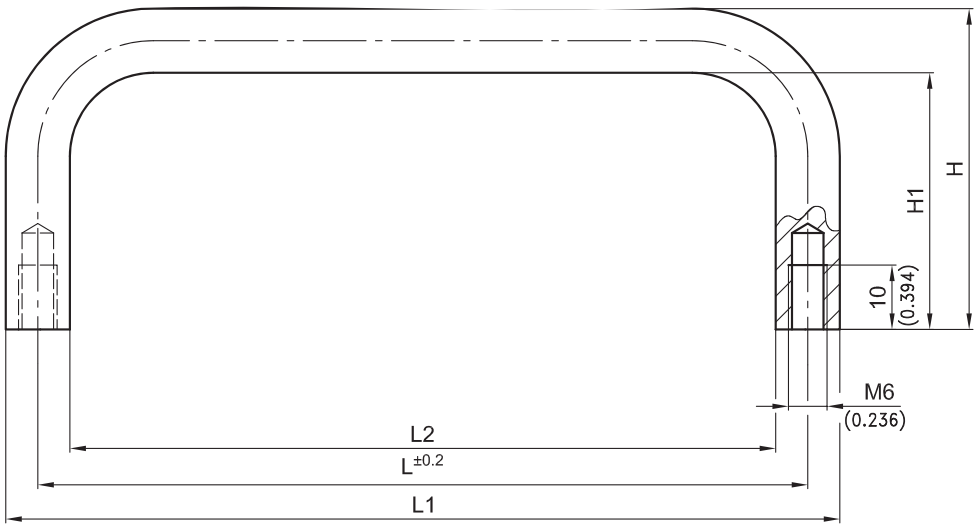

Solid aluminium Handle, modern industrial design.

- Handles for machine building, tool building, electrical industry, hospital equipment, medical and food processing technology.
- Designed for vertical or horizontal uses.
- For pulling and carrying.
- Fastening by M6 screws.

Material:

- aluminium, anodized (AlMgSi 0,5)

Other surfaces on request.

						Aluminium
Machine Handle, half round	**L**	**L1**	**L2**	**H**	**H1**	**anodized**
mm / inch	112 / 4.409	122 / 4.803	102 / 4.016	50 / 1.969	40 / 1.575	**213-0513.96-00112**
	128 / 5.039	138 / 5.433	118 / 4.646	50 / 1.969	40 / 1.575	**213-0513.96-00128**
	160 / 6.299	170 / 6.693	150 / 5.906	50 / 1.969	40 / 1.575	**213-0513.96-00160**

DIRAK RoHS WEEE compliant

12/16/08

© copyright by DIRAK / Germany

DIRAK GmbH - Königsfelder Str. 1 - D-58256 Ennepetal - Phone: +49 (0) 2333/837-0 - Fax: +49 (0) 2333/837-100

DIRAK
www.dirak.com

6-1105 Bridge Handle
Aluminium

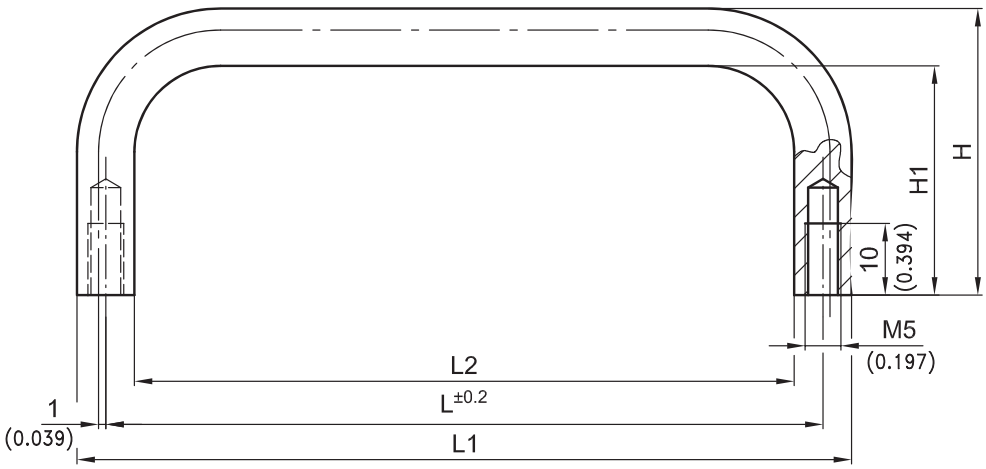

Solid aluminium Handle, modern industrial design.

- Handles for hospital equipment, medical and food processing technology.
- Designed for vertical or horizontal uses.
- Fastening by M5 screws.

Material:

- aluminium, anodized (AlMgSi 0,5)

Other surfaces on request.

						Aluminium
Bridge Handle, half round	**L**	**L1**	**L2**	**H**	**H1**	**anodized**
mm / inch	100 / 3.937	108 / 4.252	92 / 3.622	40 / 1.575	32 / 1.260	**213-0516.96-00100**

12/16/08

© copyright by DIRAK / Germany

DIRAK GmbH - Königsfelder Str. 1 - D-58256 Ennepetal - Phone: +49 (0) 2333/837-0 - Fax: +49 (0) 2333/837-100

DIRAK
www.dirak.com

6-1106 Bridge Handle
Aluminium

METALIKA Locking systems KACIN
www.metalika-kacin.com

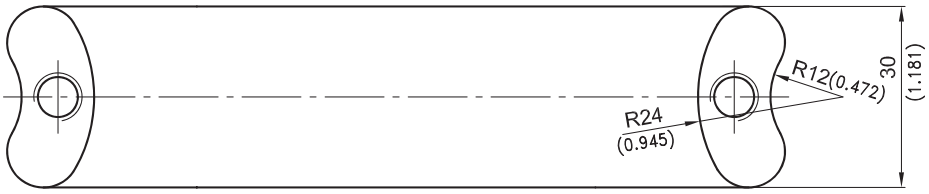

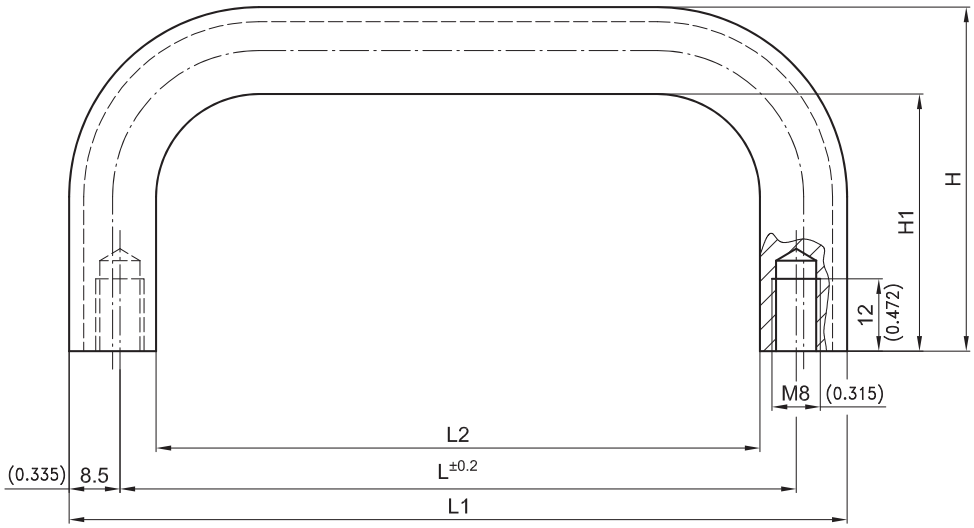

Solid aluminium Handle.

- The appealing kidney-shaped design makes it human-engineered and easy to use.
- Handles for machine building, tool building, electrical industry, hospital equipment, medical and food processing technology.
- Designed for vertical or horizontal uses.
- For pulling and carrying.
- Fastening by M8 screws.

Material:

- aluminium, anodized (AlMgSi 0,5)

Other surfaces on request.

Machine Handle, kidney-shaped	L	L1	L2	H	H1	Aluminium anodized
mm / inch	128 / 5.039	145 / 5.709	116 / 4.567	57 / 2.244	42.5 / 1.673	**213-0515.96-00128**
	160 / 6.299	177 / 6.969	148 / 5.827	57 / 2.244	42.5 / 1.673	**213-0515.96-00160**
	192 / 7.559	209 / 8.228	180 / 7.087	57 / 2.244	42.5 / 1.673	**213-0515.96-00192**
	350 / 13.780	367 / 14.449	338 / 13.307	57 / 2.244	42.5 / 1.673	**213-0515.96-00350**
	500 / 19.685	517 / 20.354	488 / 19.216	57 / 2.244	42.5 / 1.673	**213-0515.96-00500**

DIRAK RoHS WEEE compliant

12/16/08

© copyright by DIRAK / Germany

DIRAK
www.dirak.com

6-1107 Finger Pull Handle
Aluminium

METALIKA Locking systems KACIN
www.metalika-kacin.com

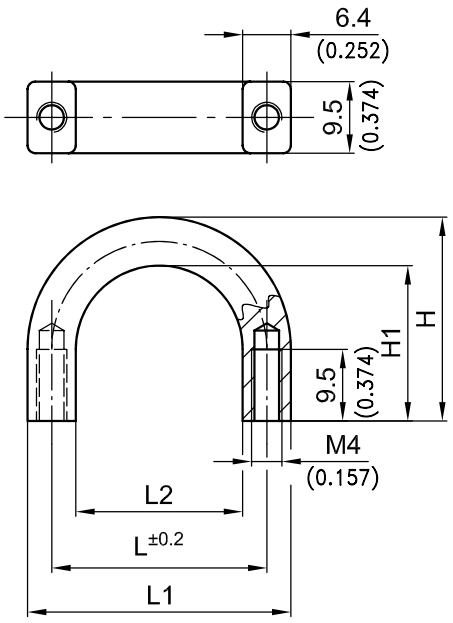

Solid aluminium Handle, modern industrial design.

- This Handle is suitable for the computer industry, 19“ technology, insertions and equipments and other applications.
- Designed for vertical or horizontal uses.
- Fastening by M4 screws.

Material:

- aluminium, anodized (AlMgSi 0,5)

Other surfaces on request.

						Aluminium
Finger Pull Handle	**L**	**L1**	**L2**	**H**	**H1**	**anodized**
mm / inch	28.5 / 1.122	35 / 1.378	22.2 / 0.874	27 / 1.063	20.5 / 0.807	**213-0510.96-00285**

DIRAK RoHS WEEE compliant

12/16/08

© copyright by DIRAK / Germany

DIRAK GmbH - Königsfelder Str. 1 - D-58256 Ennepetal - Phone: +49 (0) 2333/837-0 - Fax: +49 (0) 2333/837-100

DIRAK
www.dirak.com

6-1108 Bridge Handle
Aluminium

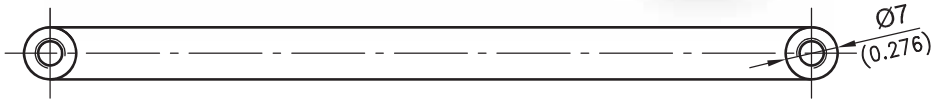

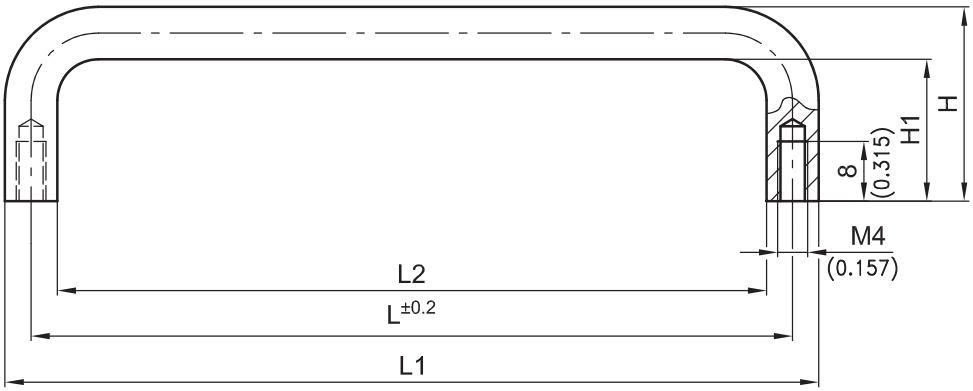

Solid aluminium Handle, modern industrial design.

- This Handle is suitable for the computer industry, 19“ technology, insertions and equipments and other applications.
- Designed for vertical or horizontal uses.
- Fastening by M4 screws.

Material:

- aluminium, anodized (AlMgSi 0,5)

Other surfaces on request.

Finger Pull Handle in same design see product system: 6-1109.

						Aluminium
Bridge Handle	**L**	**L1**	**L2**	**H**	**H1**	**anodized**
mm / inch	96 / 3.780	103 / 4.055	89 / 3.504	26 / 1.024	19 / 0.748	**213-0512.96-00096**
	128 / 5.039	135 / 5.315	121 / 4.764	26 / 1.024	19 / 0.748	**213-0512.96-00128**

12/16/08

© copyright by DIRAK / Germany

DIRAK GmbH - Königsfelder Str. 1 - D-58256 Ennepetal - Phone: +49 (0) 2333/837-0 - Fax: +49 (0) 2333/837-100

DIRAK
www.dirak.com

6-1109 Finger Pull Handle
Aluminium

METALIKA Locking systems KACIN
www.metalika-kacin.com

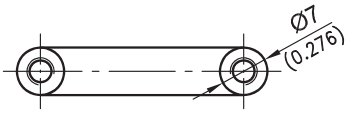

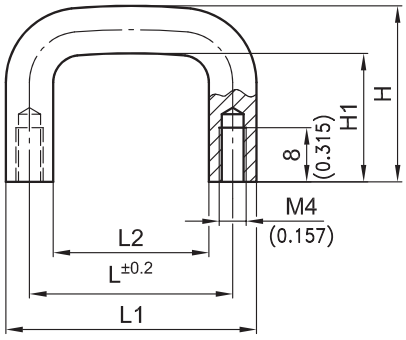

Solid aluminium Handle, modern industrial design.

- This Handle is suitable for the computer industry, 19“ technology, insertions and equipments and other applications.
- Designed for vertical or horizontal uses.
- Fastening by M4 screws.

Material:

- aluminium, anodized (AlMgSi 0,5)

Other surfaces on request.

Bridge Handle in same design see product system: 6-1108.

						Aluminium
Bridge Handle	**L**	**L1**	**L2**	**H**	**H1**	**anodized**
mm / inch	30 / 1.181	37 / 1.457	23 / 0.906	26 / 1.036	19 / 0.748	**213-0511.96-00030**
	64 / 2.520	71 / 2.795	57 / 2.244	26 / 1.036	19 / 0.748	**213-0511.96-00064**

DIRAK RoHS/WEEE compliant

12/16/08

© copyright by DIRAK / Germany

DIRAK GmbH - Königsfelder Str. 1 - D-58256 Ennepetal - Phone: +49 (0) 2333/837-0 - Fax: +49 (0) 2333/837-100

DIRAK
www.dirak.com

6-1110SL Quarter-Turn with Handle SNAP-LINE

with cylinder or insert

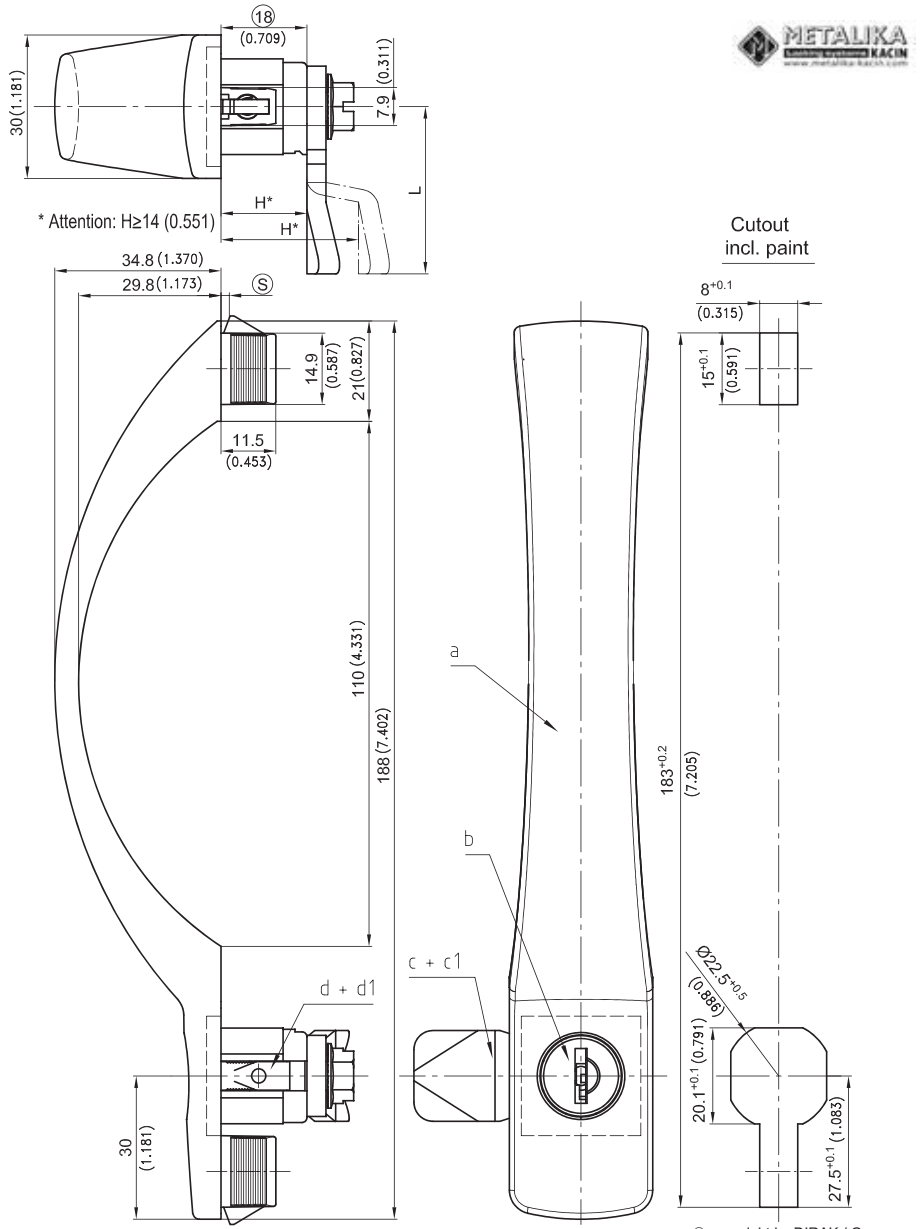

© copyright by DIRAK / Germany

DIRAK
www.dirak.com

6-1110SL Quarter-Turn with Handle SNAP-LINE

with cylinder or insert

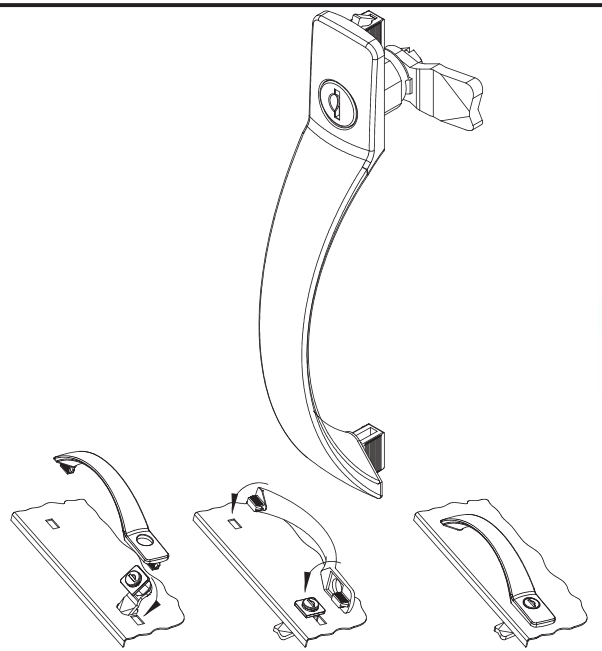

1. Installation of Quarter-Turn
2. ENCASING the loose Quarter-Turn.
3. Fitted and fixed

Please contact DIRAK for the Assembly-partnumber of a completely pre-assembled SNAP-LINE Bowed Handle.

Advise following details:
Door-thickness,
Application: cam 90° to handle, RH/LH,
cam in line withh handle,
Cam or 3-point cam H in mm,
Cylinder or Insert,
Grounding/ Earthing clip: Y/N

		clamping range (S)	with Grounding/ Earthing clip	without Grounding/ Earthing clip
a) **Bowed Handle** with Snap wedges with cylinder				
	keyed alike DIRAK 1333*	0.8 - 1.5	**413-9305.00-00012**	**413-9301.00-00012**
		1.3 - 2.0	**413-9305.00-00016**	**413-9301.00-00016**
		1.5 - 2.2	**413-9305.00-00020**	**413-9301.00-00020**
	keyed different/mixed	0.8 - 1.5	**413-9306.00-00012**	**413-9302.00-00012**
		1.3 - 2.0	**413-9306.00-00016**	**413-9302.00-00016**
		1.5 - 2.2	**413-9306.00-00020**	**413-9302.00-00020**
b) for inserts (not imaged)		0.8 - 1.5	**413-9307.00-00012**	**413-9303.00-00012**
		1.3 - 2.0	**413-9307.00-00016**	**413-9303.00-00016**
		1.5 - 2.2	**413-9307.00-00020**	**413-9303.00-00020**
		Other (S) - dimensions on request!		
Inserts	see product system 1-095, 1-100 and 7-080			
c) Cams	see product system 1-095, 1-100, 1-262, 7-080 and 7-105			
c_1) 3-point cam	see product system 1-100 and 2-151			
d) Grounding/Earthing clip for handle with insert				**200-1101.04**
d_1) Grounding/Earthing clip for handle with cylinder				**200-1103.04**
* With stainless dust-shutter				

Quarter-Turn with high-quality Bowed Handle SNAP-LINE with cylinder or insert.

- The Housing for cylinder or insert can be turned by 90° and the handle can be used for RH/LH, horizontal and vertical applications.
- The handle can be equiped with cylinder or insert.
- The installation is effected by a simple push into appropriate cutouts.

- **Attention: H-dimension of the cam ≥ 14mm (0.551).**

- **Advice: In case of applying a cylinder the 3-point cam should not be used.**

Material:
- **Handle:** zinc die, matt chrome plated
- **Other surfaces on request.**
- **Housing:** zinc die
- **Snap wedges:** sintermetal, plated
- **Spring:** spring steel
- **Grounding/Earthing clip:** stainless steel
- **Cams:** refer to c) or c_1)
- **Screw:** steel, zinc plated

12/15/08

© copyright by DIRAK / Germany

DIRAK GmbH - Königsfelder Str. 1 - D-58256 Ennepetal - Phone: +49 (0) 2333/837-0 - Fax: +49 (0) 2333/837-100

DIRAK
www.dirak.com

6-1131 Bridge Handle
Zinc die

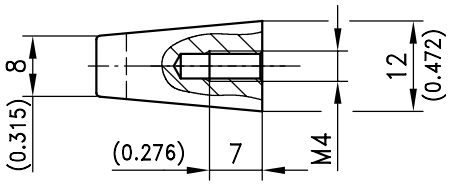

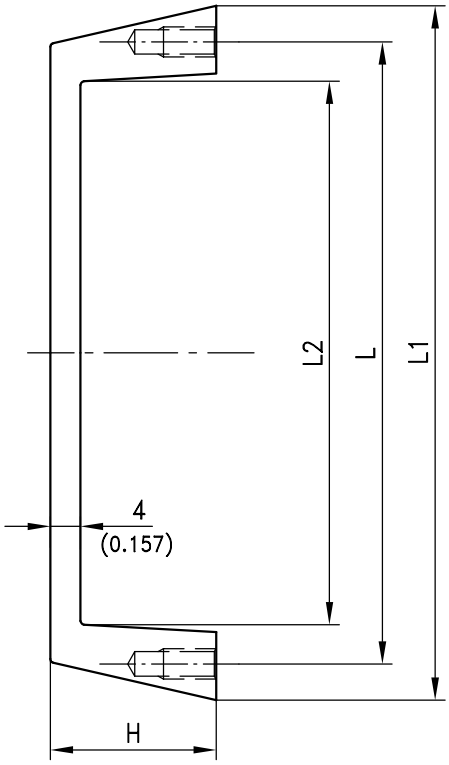

Handle, Screw-on

Material:
- **Handle:** zinc die, chrome plated or black coated

Bridge Handle				zinc die,	zinc die,
L	L1	L2	H	chrome plated	black coated
81/3.189	97/3.819	72/2.835	22/0.866	**213-0303.31**	**213-0303.33**
95.5/3.760	106/4.173	85/3.346	24/0.945	**213-0302.31**	**213-0302.33**

DIRAK RoHS WEEE compliant

12/16/08

© copyright by DIRAK / Germany

DIRAK GmbH - Königsfelder Str. 1 - D-58256 Ennepetal - Phone: +49 (0) 2333/837-0 - Fax: +49 (0) 2333/837-100

DIRAK
www.dirak.com

6-1132SL Bridge Handle SNAP-LINE

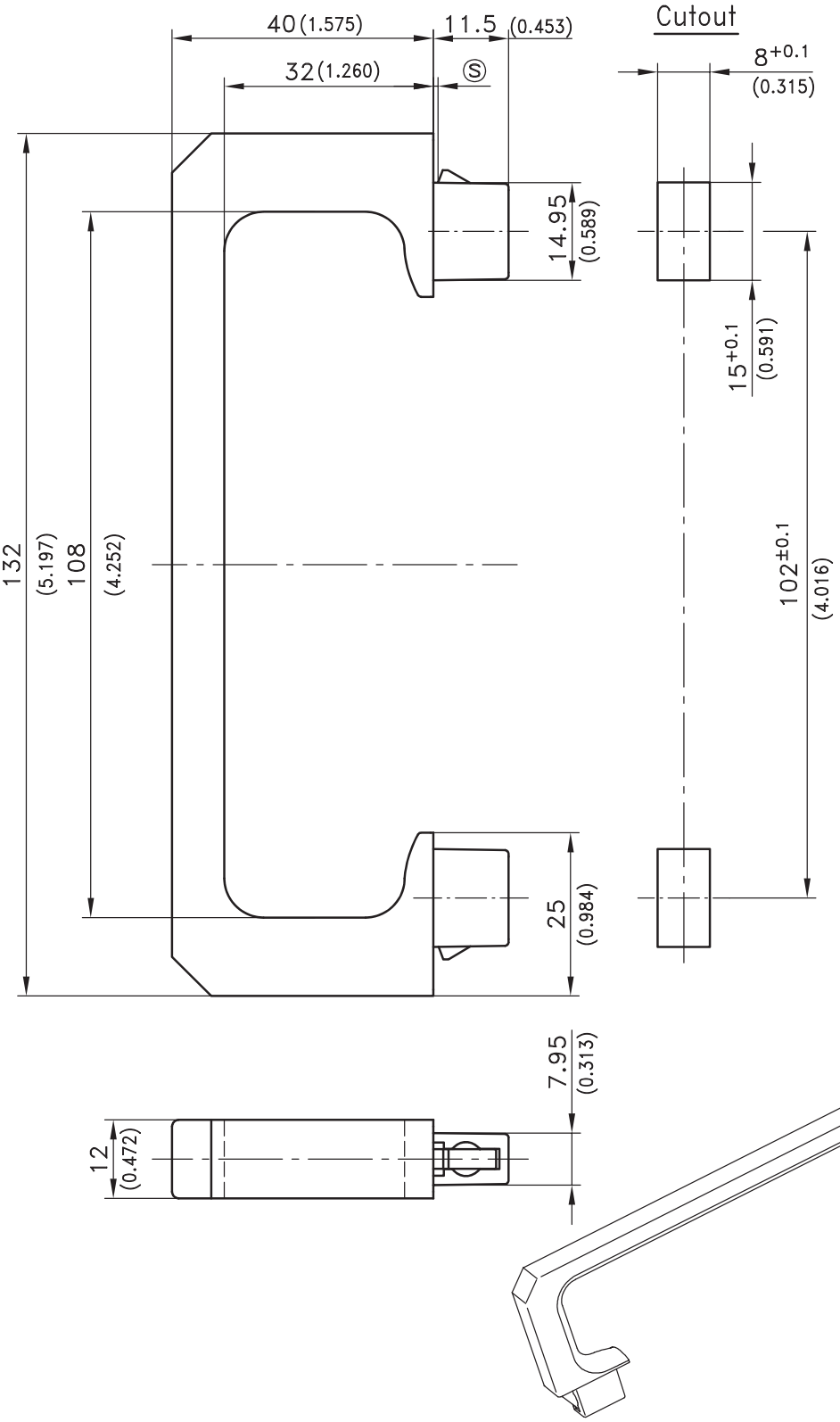

Bridge Handle, zinc die.

- Designed for vertical or horizontal uses.
- The closed surface makes this handle insensitive to dirt and easy to clean.
- The installation is effected by a simple push into appropriate cutouts.
- **Other surfaces on request.**

Material:

- **Handle:** zinc die, black
- **Snap wedges:** sintered steel
- **Spring:** spring steel

	clamping range Ⓢ	Part-No.
Handle 132mm	0.8 - 1.5	**413-9012.00-00015**
	1.3 - 2.0	**413-9012.00-00020**
	1.5 - 2.2	**413-9012.00-00022**
	1.8 - 2.5	**413-9012.00-00025**

Other Ⓢ - dimensions on request!

12/15/08

© copyright by DIRAK / Germany

DIRAK GmbH - Königsfelder Str. 1 - D-58256 Ennepetal - Phone: +49 (0) 2333/837-0 - Fax: +49 (0) 2333/837-100

DIRAK
www.dirak.com

6-1133SL Bridge Handle SNAP-LINE
OMICRON

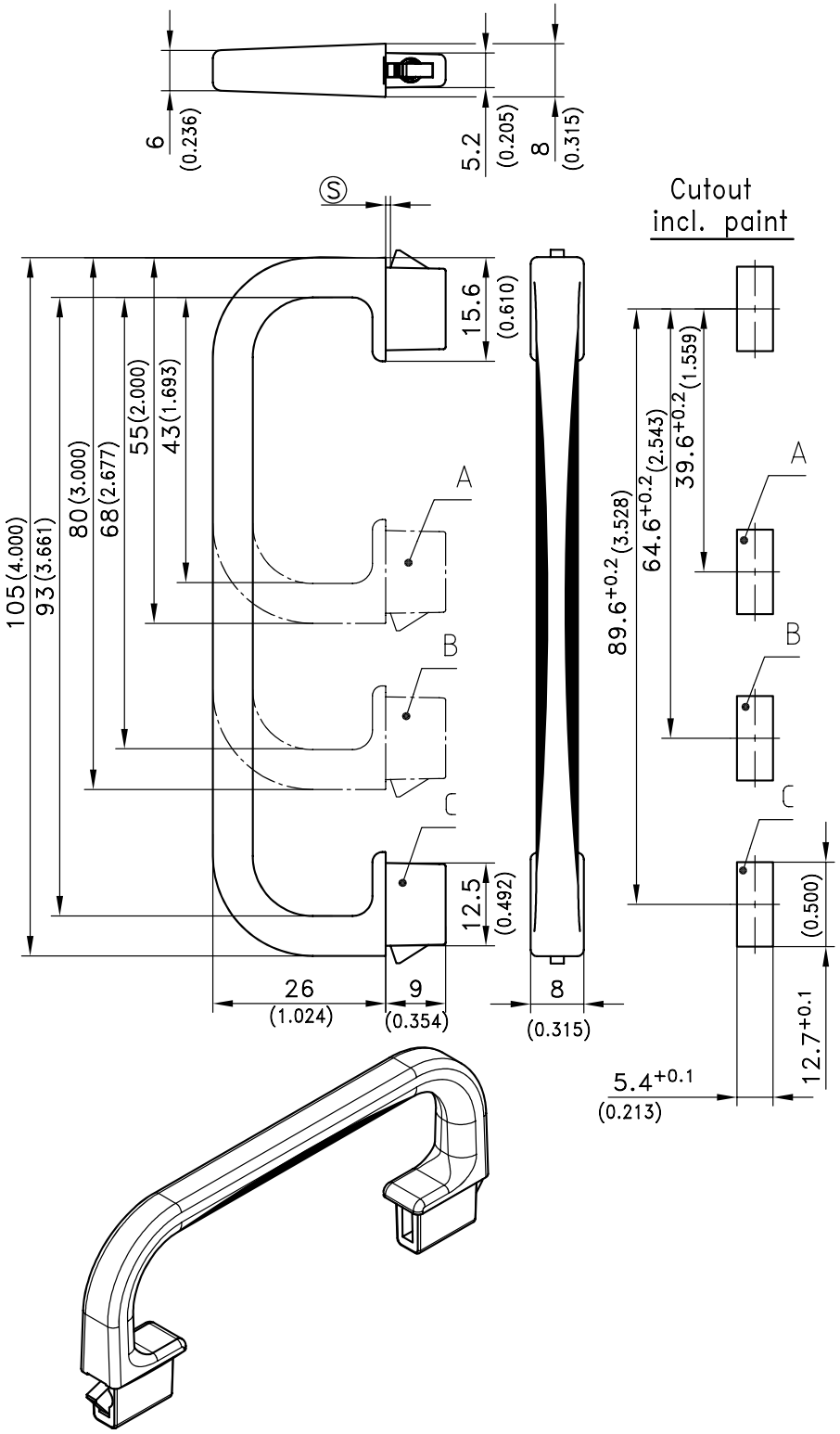

Elegant Bridge Handle in different lengths.

- This Handle is suitable for the computer industry, 19“ technology, insertions and equipments and other applications.
- The installation is effected by a simple push into appropriate cutouts.

Material:

- **Bridge Handle:** Zinc die
- **Surface:** matt chrome plated
- **Other surfaces on request!**
- **Snap wedges:** sindered steel
- **Spring:** spring steel

	Bridge Handle A 2”	Bridge Handle B 3”	Bridge Handle C 4”
clamping range Ⓢ	52(2.047) / 43(1.693)	77(3.031) / 68(2.677)	102(4.016) / 93(3.661)
0.6 - 0.9	**413-9013.40-00609**	**413-9014.40-00609**	**413-9015.40-00609**
0.8 - 1.1	**413-9013.40-00811**	**413-9014.40-00811**	**413-9015.40-00811**
1.2 - 1.5	**413-9013.40-01215**	**413-9014.40-01215**	**413-9015.40-01215**
1.8 - 2.1	**413-9013.40-01821**	**413-9014.40-01821**	**413-9015.40-01821**
2.2 - 2.5	**413-9013.40-02225**	**413-9014.40-02225**	**413-9015.40-02225**

12/15/08

© copyright by DIRAK / Germany

DIRAK GmbH - Königsfelder Str. 1 - D-58256 Ennepetal - Phone: +49 (0) 2333/837-0 - Fax: +49 (0) 2333/837-100

DIRAK
www.dirak.com

6-1171SL Bowed Handle SNAP-LINE

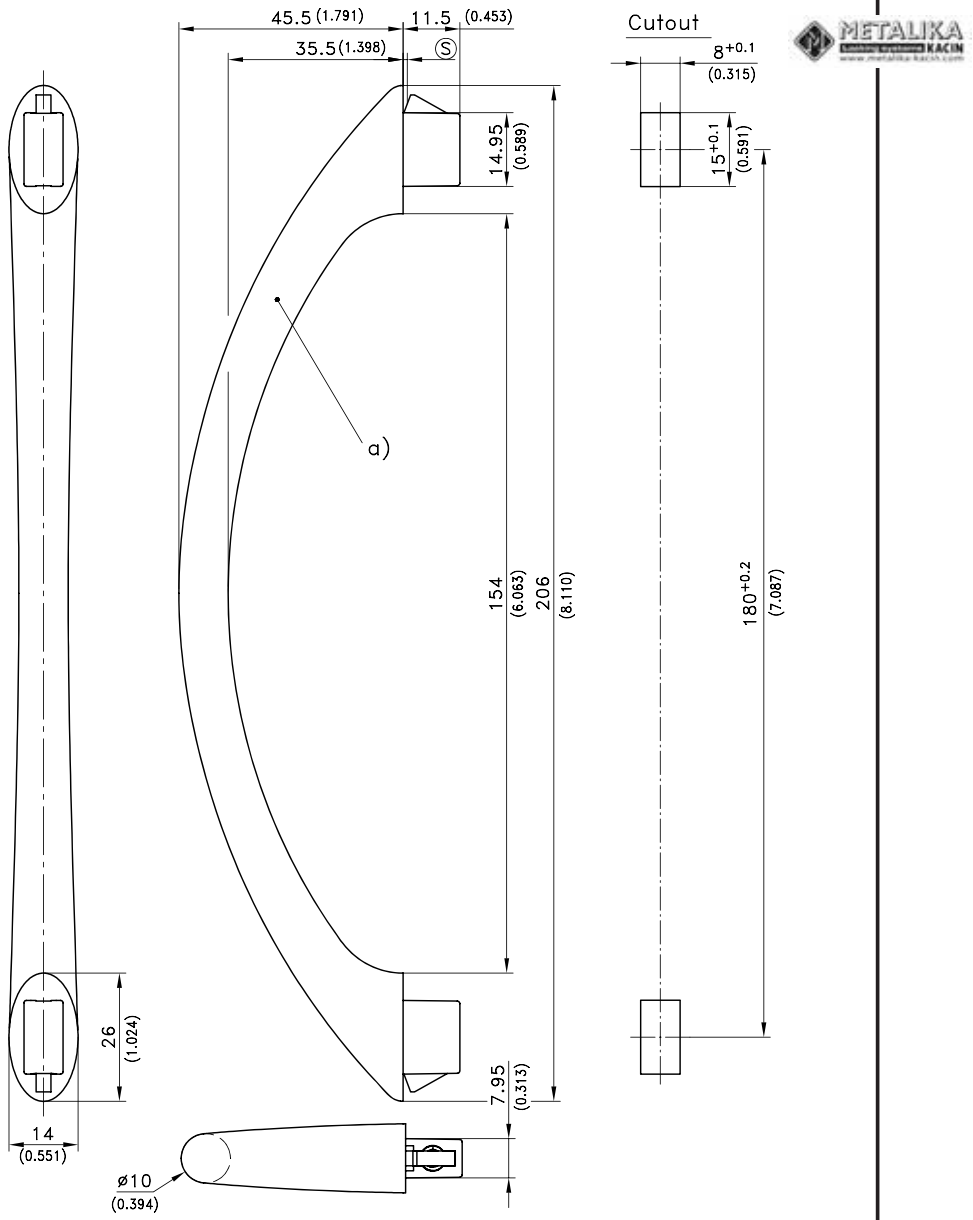

© copyright by DIRAK / Germany

DIRAK
www.dirak.com

6-1171SL Bowed Handle SNAP-LINE

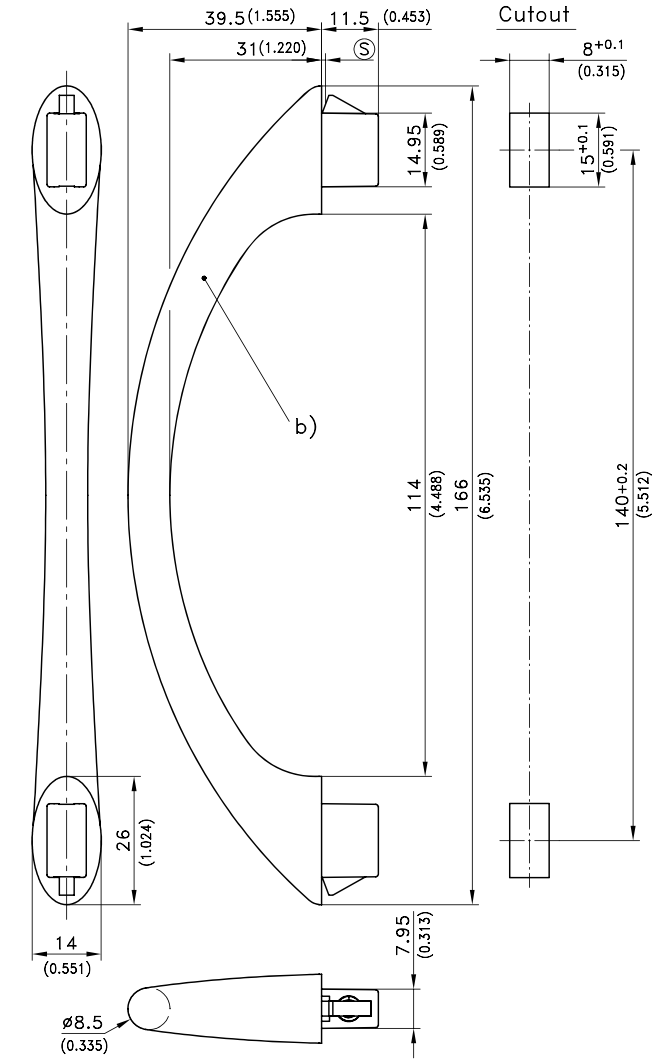

Elegant Bowed Handle, surfaces matt chrome plated.

- Designed for vertical or horizontal uses.
- **Other surfaces on request.**
- The installation is effected by a simple push into appropriate cutouts.

Material:

- **Handle:** zinc die, matt chrome plated
- **Snap wedges:** sintered steel
- **Spring:** spring steel

	clamping range Ⓢ	Part No.
Bow-Handle a)	0.8 - 1.5	**413-9018.00-00815**
	1.3 - 2.0	**413-9018.00-01320**
	1.5 - 2.2	**413-9018.00-01522**
Bow-Handle b)	0.8 - 1.5	**413-9017.00-00815**
	1.3 - 2.0	**413-9017.00-01320**
	1.5 - 2.2	**413-9017.00-01522**

12/15/08

© copyright by DIRAK / Germany

DIRAK GmbH - Königsfelder Str. 1 - D-58256 Ennepetal - Phone: +49 (0) 2333/837-0 - Fax: +49 (0) 2333/837-100

DIRAK
www.dirak.com

6-1200.01SL Finger Pull Handle SNAP-LINE

OMEGA

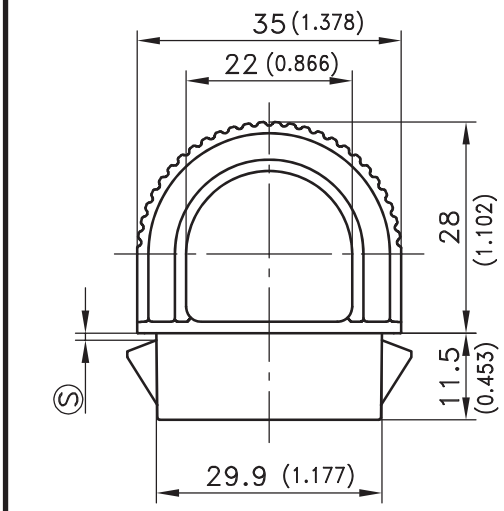

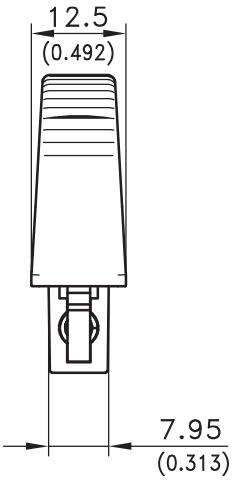

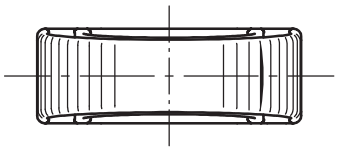

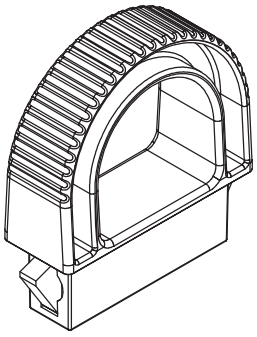

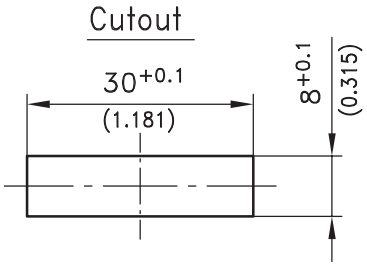

OMEGA small finger pull handles SNAP-LINE.

- The Finger Pull Handles are suitable for the computer industry, 19“ technology, insertions and equipments and other applications.
- Installation by a simple push into the cutout.
- Reinforcement plate for thin-walled sheets and for higher loads: 292-0702.15-01030.
- Tool for uninstallation: 292-0306.80-02530.

Material:

- **OMEGA:** PA, black or zinc die, matt chrome plated

Other surfaces on request

- **Snap wedges:** sintered steel
- **Spring:** spring steel

	clamping range Ⓢ	PA, black	zinc die, matt chrome plated
OMEGA	0.8 - 1.5	**413-9001.00-00015**	**413-9008.00-00015**
	1.3 - 2.0	**413-9001.00-00020**	**413-9008.00-00020**
	1.5 - 2.2	**413-9001.00-00022**	**413-9008.00-00022**
	2.0 - 2.7	**on request**	**on request**

Other Ⓢ - dimensions on request

11/14/07

© copyright by DIRAK / Germany

DIRAK GmbH & Co. KG - Königsfelder Str. 1 - D-58256 Ennepetal - Phone: +49 (0) 2333/837-0 - Fax: +49 (0) 2333/837-100

DIRAK
www.dirak.com

6-1200.02SL Finger Pull Handle SNAP-LINE

OMICRON

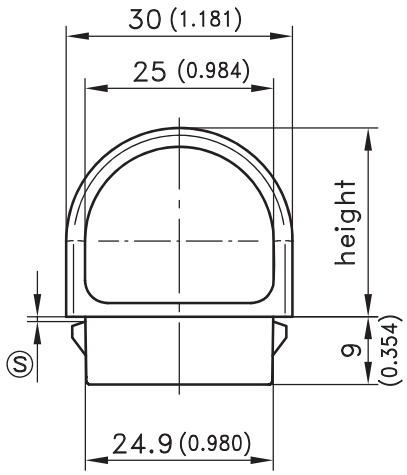

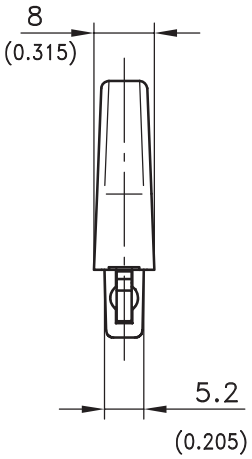

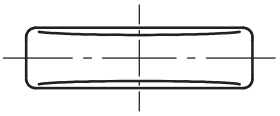

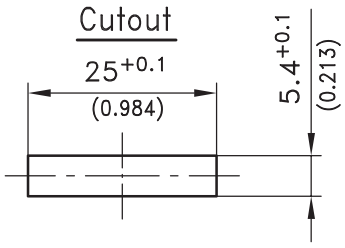

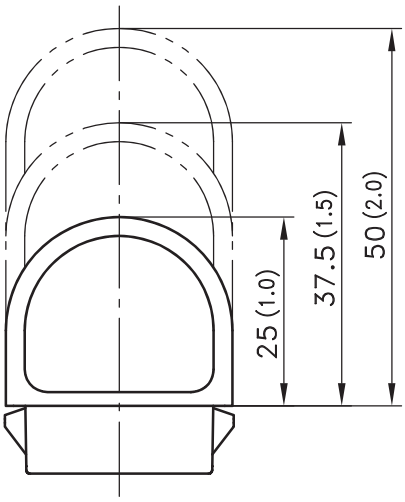

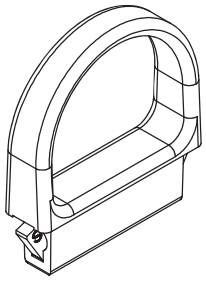

OMEGA small finger pull handles SNAP-LINE.

- The Finger Pull Handles are suitable for the computer industry, 19“ technology, insertions and equipments and other applications.
- Installation by a simple push into the cutout.
- Tool for uninstallation: 292-0306.80-02530.

Material:

- **OMICRON:** zinc die, matt chrome plated

Other surfaces on request

- **Snap wedges:** sintered steel
- **Spring:** spring steel

	clamping range Ⓢ	height 1.0“	height 1.5“	height 2.0“
OMICRON	0.6 - 0.9	**413-9009.40-00609**	**413-9010.40-00609**	**on request**
	0.8 - 1.1	**413-9009.40-00811**	**413-9010.40-00811**	**on request**
	1.2 - 1.5	**413-9009.40-01215**	**413-9010.40-01215**	**on request**
	1.8 - 2.1	**413-9009.40-01821**	**413-9010.40-01821**	**on request**
	2.2 - 2.5	**413-9009.40-02225**	**413-9010.40-02225**	**on request**
	2.4 - 2.7	**413-9009.40-02427**	**413-9010.40-02427**	**on request**

Other Ⓢ - dimensions on request!

11/14/07

© copyright by DIRAK / Germany

DIRAK GmbH & Co. KG - Königsfelder Str. 1 - D-58256 Ennepetal - Phone: +49 (0) 2333/837-0 - Fax: +49 (0) 2333/837-100

DIRAK
www.dirak.com

6-1300SL Finger Pull Handle SNAP-LINE

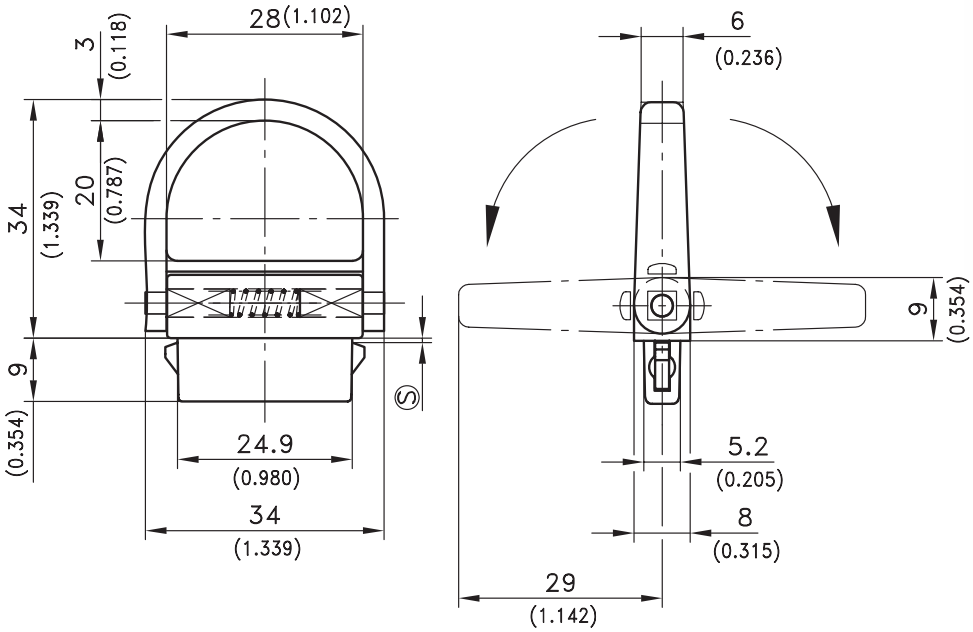

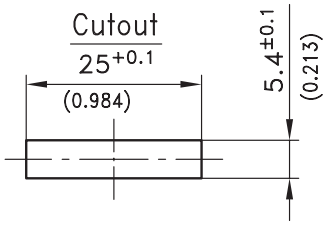

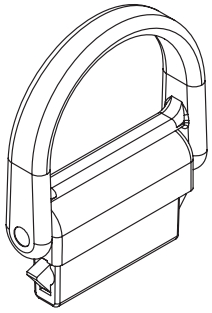

Finger pull sideways folding.

- Small space requirement.
- This Finger Pull Handle is suitable for the computer industry, 19“ technology, insertions and equipments and other applications.
- Installation by a simple push into the cutout.
- Tool for uninstallation: 292-0306.80-02530.

Material:

- **Handle- and SNAP-part:** zinc die, matt chrome plated
- **Pin:** steel, zinc plated
- **Spring:** spring steel, zinc plated

Other surfaces on request!

- **Snap wedges:** sintered steel
- **Spring:** spring steel

	clamping range (s)	Part-No.
Folding Finger Pull Handle	0.8 - 1.1	**413-9016.00-00811**
	1.2 - 1.5	**413-9016.00-01215**
	1.8 - 2.1	**413-9016.00-01821**
	2.2 - 2.5	**413-9016.00-02225**

Other (s) - dimensions on request!

12/15/08

© copyright by DIRAK / Germany

DIRAK®
www.dirak.com

6-1330SL Revolving Pull Handle SNAP-LINE

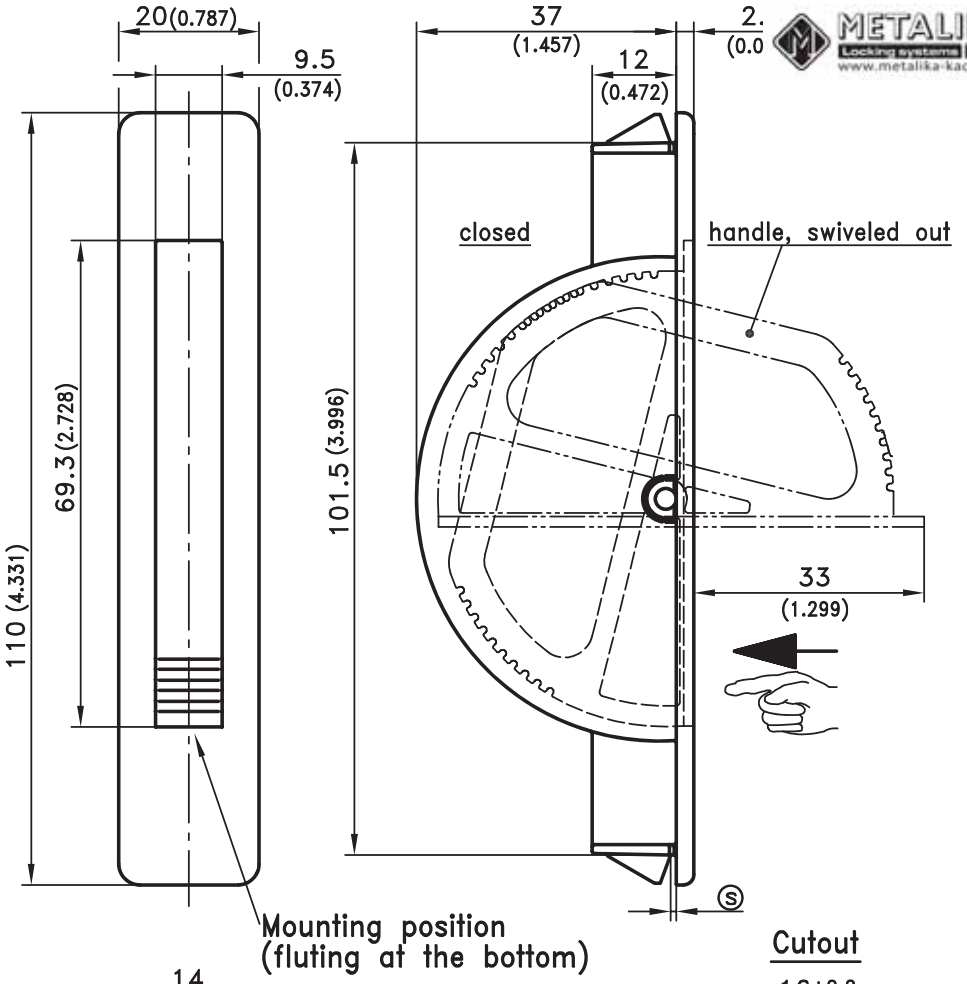

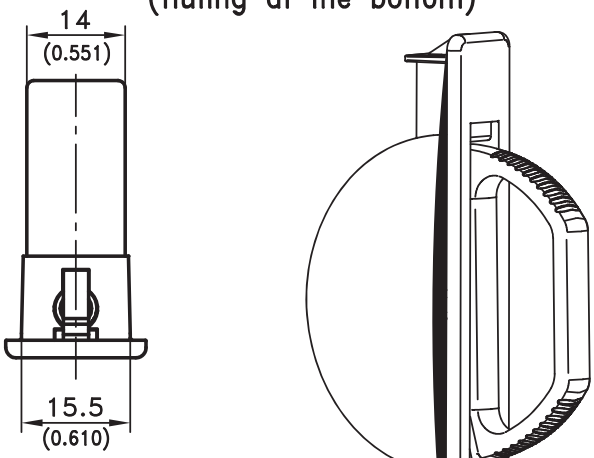

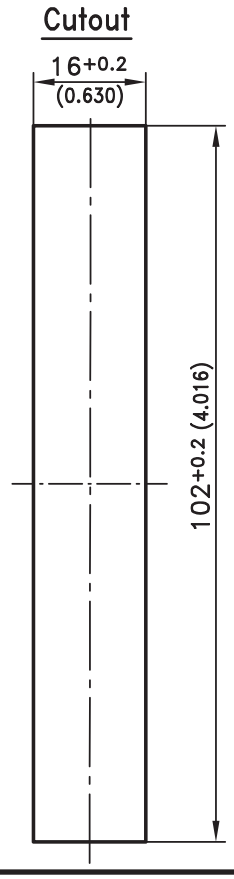

- This Handle is suitable for the computer industry, 19“ technology, insertions and equipments and other applications.
- Designed for vertical or horizontal uses.
- The corrugation shows the fitting position.
- A soft push on the fluted position makes the handle revolving into the final, open position.
- A soft push makes the swiveled out handle fall back. For closing to a fully flush surface the end of the handle has to be pushed to the housing.
- Installation by a simple push into appropriate cutout.

Material:

- **Handle and Dish:** PA, black
- **Pin:** steel, zinc plated
- **Snap wedges:** sintered steel
- **Spring:** spring steel

	clamping range Ⓢ	Part No.
Revolving Handle	0.8 - 1.5	**413-9005.00-00015**
	1.3 - 2.0	**413-9005.00-00020**
	2.0 - 2.7	**on request**
Other Ⓢ - dimensions on request!		

12/15/08

© copyright by DIRAK / Germany

DIRAK GmbH - Königsfelder Str. 1 - D-58256 Ennepetal - Phone: +49 (0) 2333/837-0 - Fax: +49 (0) 2333/837-100

DIRAK
www.dirak.com

6-1380 Hinged Recessed Handle

Zinc die

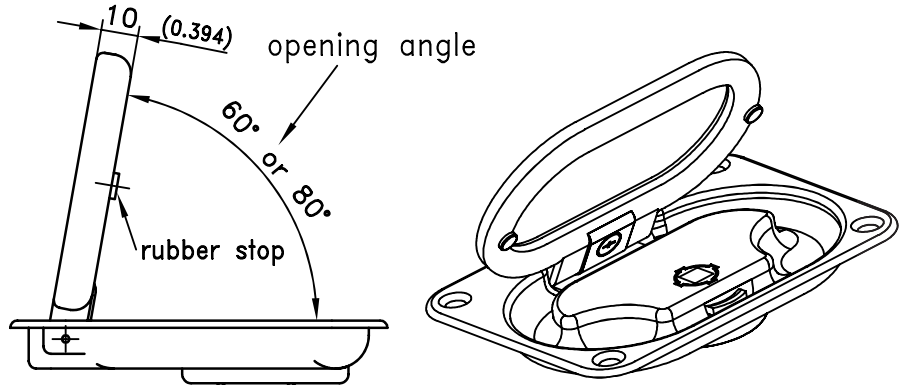

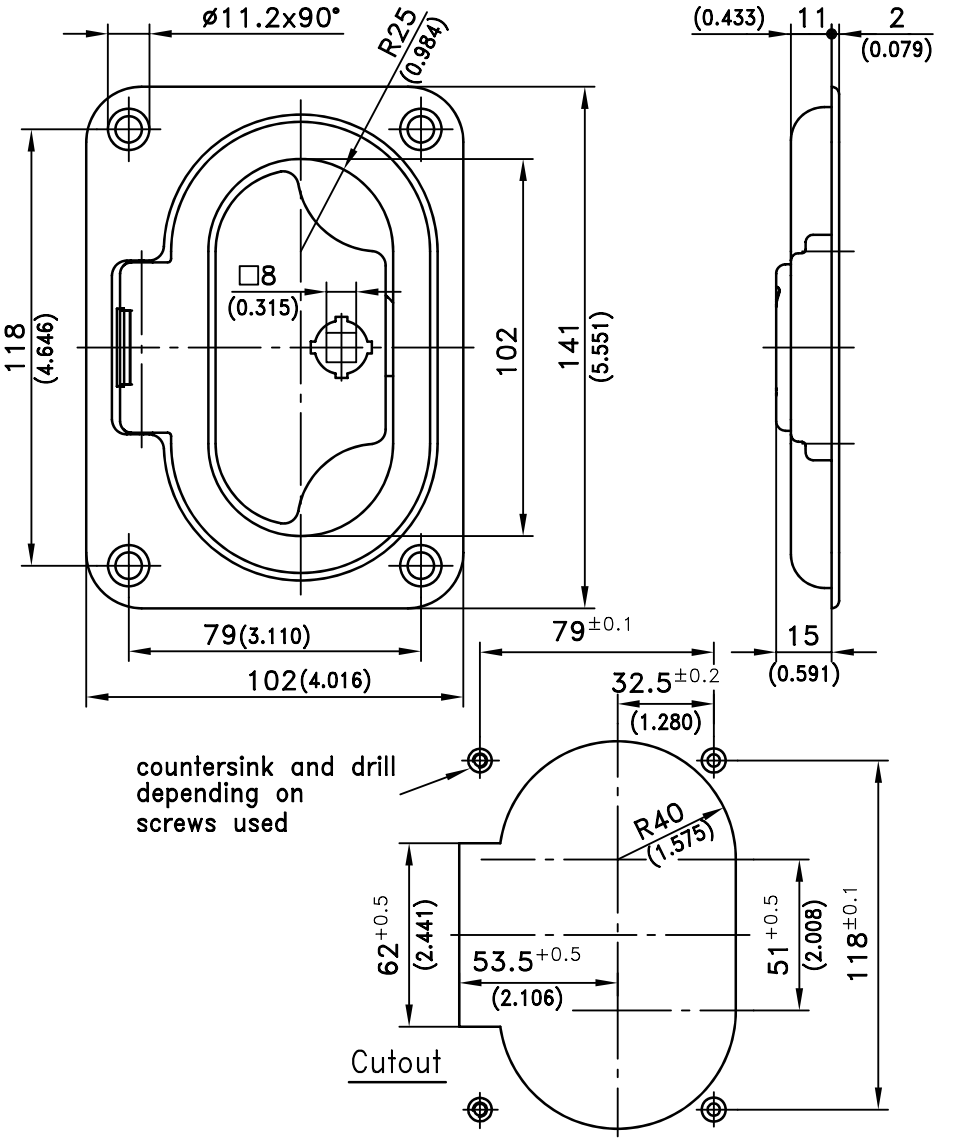

Flush-mounted Hinged, Recessed Handle.

- Zinc die with or without lock and opening angle about 60° or 80°.
- A low overall depth!
- Horizontal and vertical application.
- The vibration proof construction makes it possible to use this flush-mounted handle also in special areas such as road vehicles and railcars / wagons.
- Unauthorized activation of the recessed hinged handle is prevented by an integrated safety Quarter-Turn, which is operated by means of a fastener key. This security feature is enhanced by the flush construction, which also prevents accumulation of dirt due to the completely closed housing surface.
- Weight 510g
  Material properties on request.

Material:

- **Hinged, recessed handle:** zinc die, chrome plated or black coated

	Opening angle	
Hinge recessed handle, chrome plated	**60°**	**80°**
with lock	**213-9101.00-00060**	**213-9101.00-00080**
without lock	**213-9001.00-00060**	**213-9001.00-00080**
Hinge recessed handle, black coated		
with lock	**213-9102.00-00060**	**213-9102.00-00080**
without lock	**213-9002.00-00060**	**213-9002.00-00080**

Zinc die keys please refer to product system 6-100

12/16/08

© copyright by DIRAK / Germany

DIRAK GmbH - Königsfelder Str. 1 - D-58256 Ennepetal - Phone: +49 (0) 2333/837-0 - Fax: +49 (0) 2333/837-100

DIRAK
www.dirak.com

6-1410 Dish Handle

Polyamide

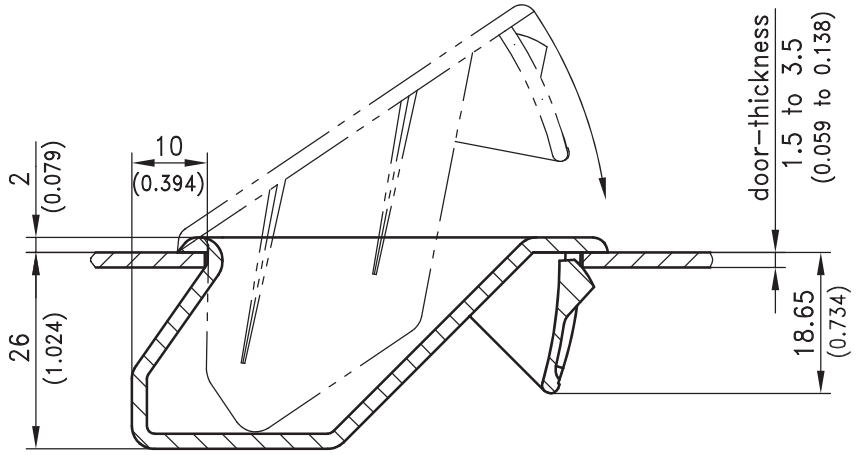

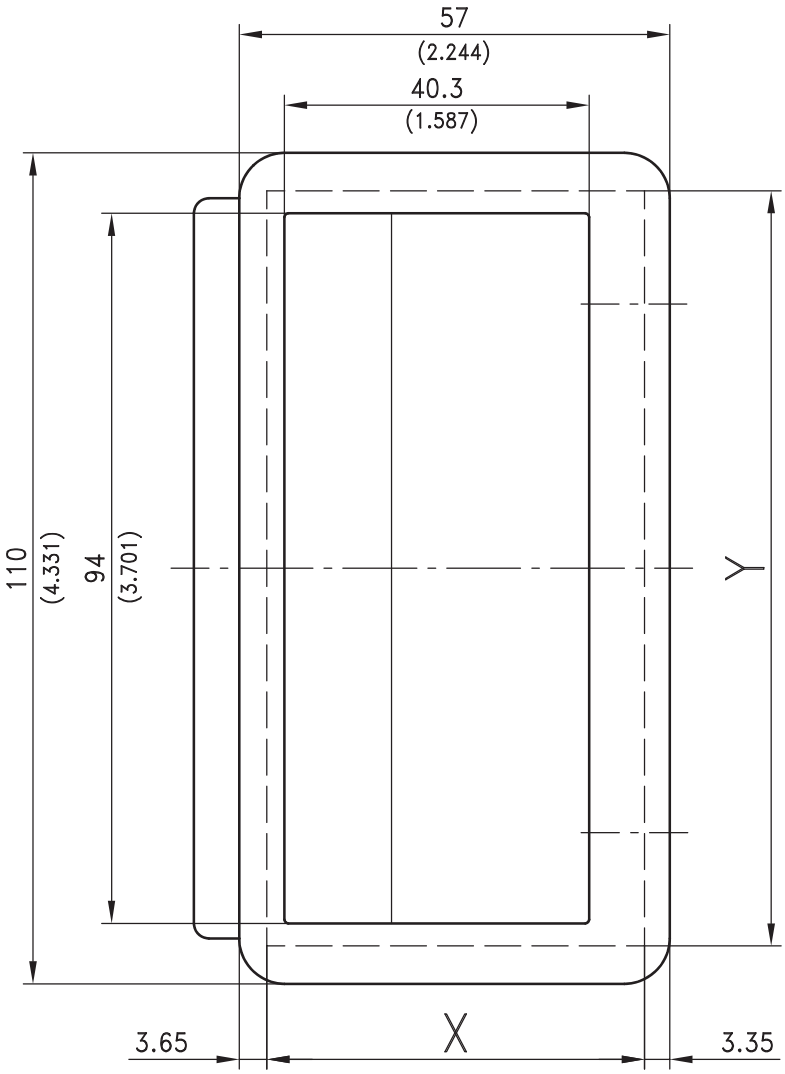

Handle dish, clip-in for door thickness 1.5mm to 3.5mm (0.059 to 0.138).

- The dimensions of the cutouts for the different door-thicknesses are indicated in the table mentioned below.

Material:

- PA, black

	Part No.
Handle dish	**213-0705.51**

Door thickness	**Dimensions of cutout**		
in mm	**X**	in mm	**Y**
1.5-2.0	$49.6^{+0.2}$		$100_{-0.5}$
2.0-3.2	$50.3^{+0,3}$		$100_{-0,5}$
3.2-3.5	$51^{+0,3}$		$100_{-0,5}$

05/07/09

© copyright by DIRAK / Germany

DIRAK GmbH - Königsfelder Str. 1 - D-58256 Ennepetal - Phone: +49 (0) 2333/837-0 - Fax: +49 (0) 2333/837-100

DIRAK
www.dirak.com

6-1411 Dish Handle

Polyamide

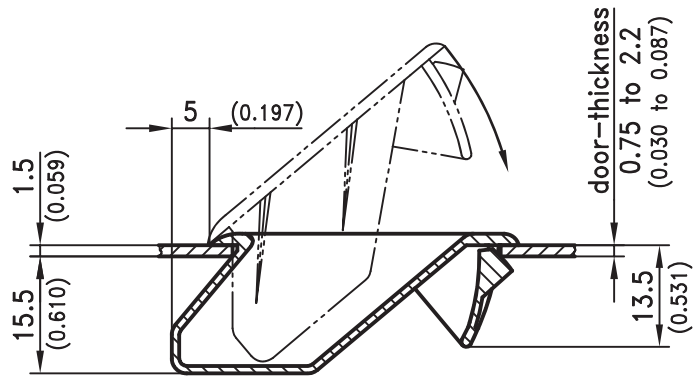

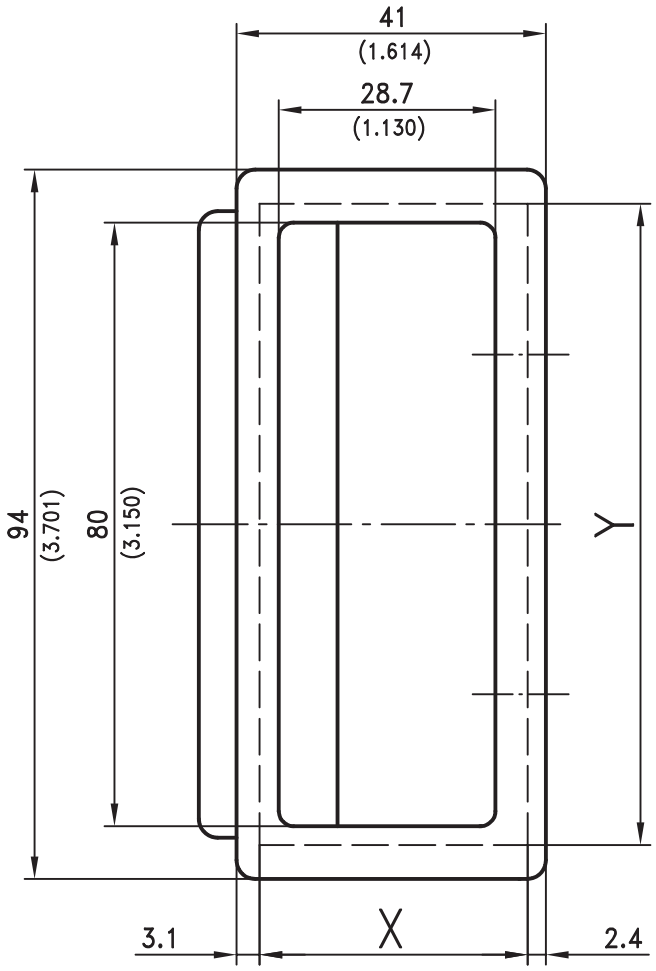

Handle dish, clip-in for door thickness 0.75mm to 2.2mm (0.030 to 0.087).

- The dimensions of the cutouts for the different door thicknesses are indicated in the table below.

Material:

- PA, black

	Part No.
Handle dish	**213-0703.03**

Door thickness	**Dimensions of cutout**		
in mm	**X**	in mm	**Y**
0.75	$34.8^{+0.2}$		$85.0^{+0.2}$
1.0	$35.0^{+0.2}$		$85.0^{+0.2}$
1.5	$36.0^{+0.2}$		$85.0^{+0.2}$
2.0	$36.0^{+0.2}$		$85.0^{+0.2}$
2.2	$36.0^{+0.2}$		$85.0^{+0.2}$

12/16/08

© copyright by DIRAK / Germany

DIRAK GmbH - Königsfelder Str. 1 - D-58256 Ennepetal - Phone: +49 (0) 2333/837-0 - Fax: +49 (0) 2333/837-100

DIRAK
www.dirak.com

6-1420 Dish Handle

Polyamide

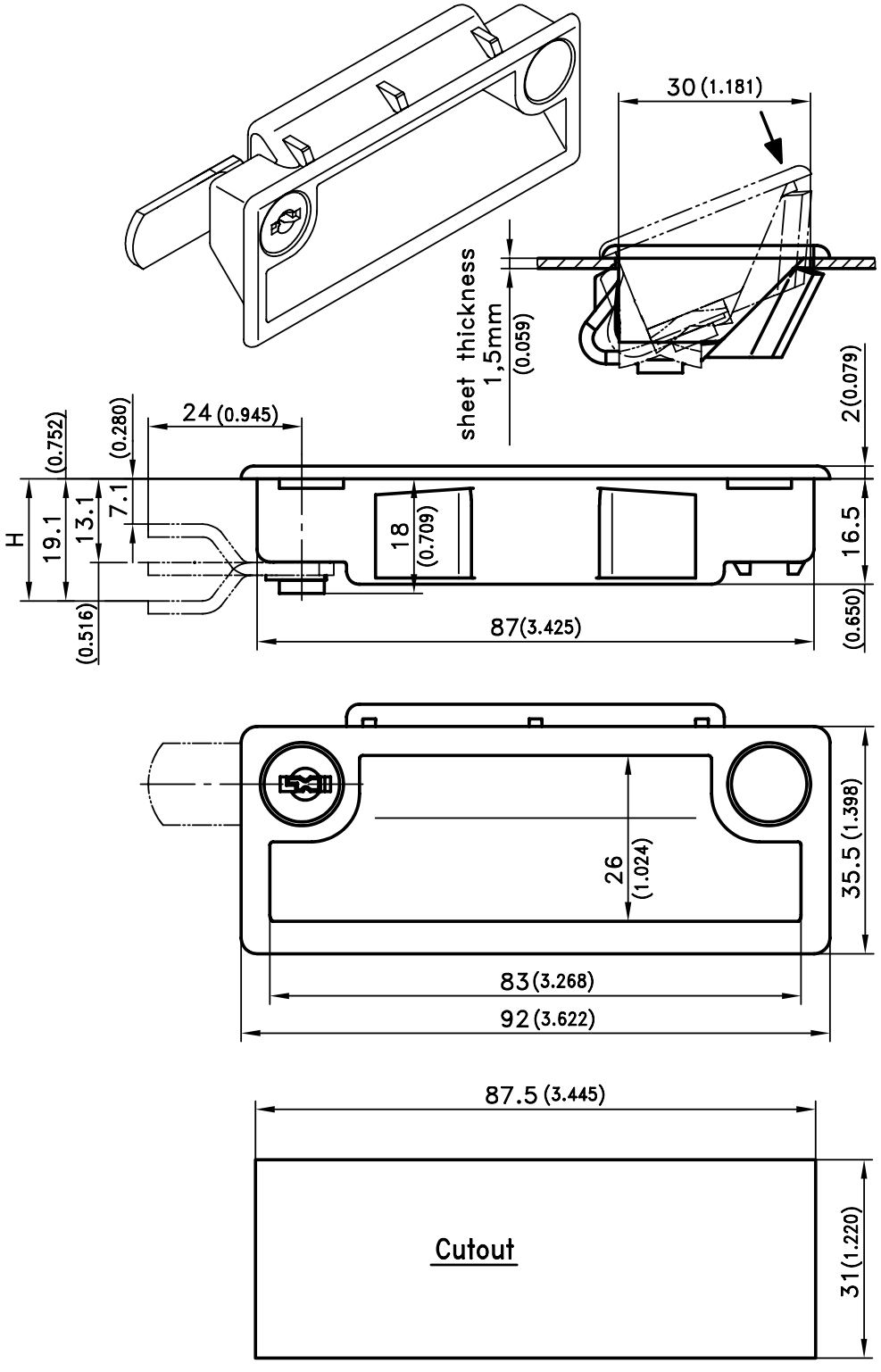

Small lockable handle dish

- Locking cylinder can be inserted on either side.
- **Attention**: Handle dish will be shipped without keys. Please order keys separately!
- Sheet thickness 1.5mm
- Dimension **H** as drawn.

Material:

- **Handle dish and plug:** PA, black

		Part No.
Handle dish RH (as drawn)	without keys	**213-9301.00-00000**
Handle dish LH	without keys	**213-9302.00-00000**
Handle dish without locking cylinder, with 2 plugs		**On request**
Cams, straight		**220-0801**
Cams, angled		**220-0802**
Special cams please refer product system 1-058		
2 keys, ringed		**205-9530.00-23211**

12/16/08

© copyright by DIRAK / Germany

DIRAK GmbH - Königsfelder Str. 1 - D-58256 Ennepetal - Phone: +49 (0) 2333/837-0 - Fax: +49 (0) 2333/837-100

DIRAK
www.dirak.com

6-1500.01SL Grip Handle 25x5.4 SNAP-LINE

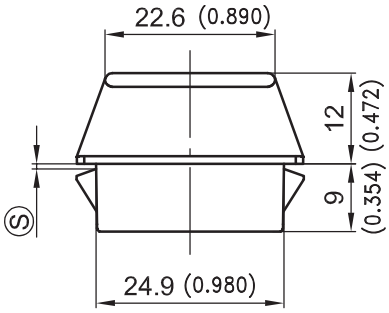

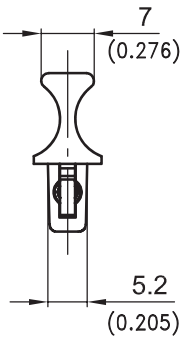

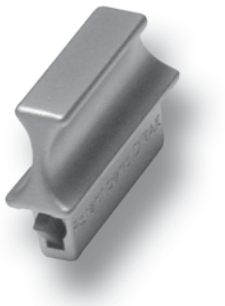

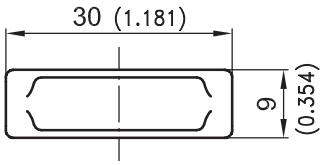

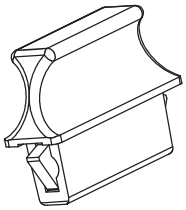

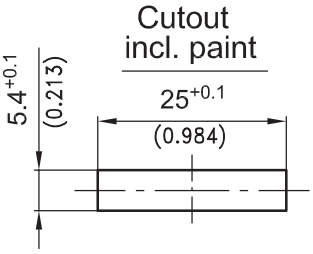

Elegant flat grip handle.

- This Handle is suitable for the computer industry, 19“ technology, insertions and equipments and other applications.
- Small space requirement.
- Designed for vertical or horizontal uses.
- To be mounted by a simple push into the appropriate cutout.

Material:

- **Grip handle:** zinc die, matt chrome plated

Other surfaces on request.

- **Snap wedges:** sintered steel
- **Spring:** spring steel

	clamping range Ⓢ	Part No.
Grip Handle	0.6 - 0.9	**413-9201.00-00609**
	0.8 - 1.1	**413-9201.00-00811**
	1.2 - 1.5	**413-9201.00-01215**
	1.8 - 2.1	**413-9201.00-01821**
	2.2 - 2.5	**413-9201.00-02225**
Other Ⓢ- dimensions on request!		

Tool for uninstallation	**292-0306.80-02530**

12/15/08

© copyright by DIRAK / Germany

DIRAK GmbH - Königsfelder Str. 1 - D-58256 Ennepetal - Phone: +49 (0) 2333/837-0 - Fax: +49 (0) 2333/837-100

DIRAK
www.dirak.com

6-1500.02SL Grip Handle 9.5x8.5 SNAP-LINE

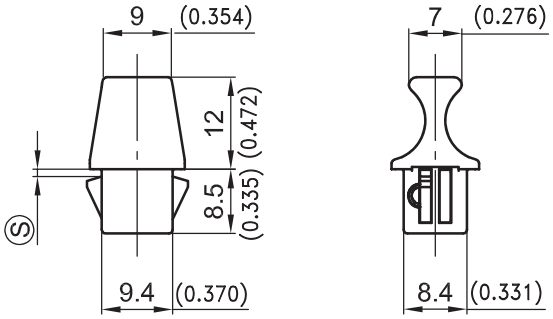

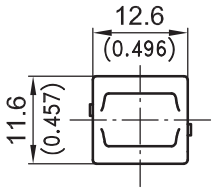

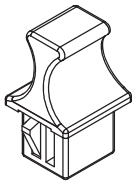

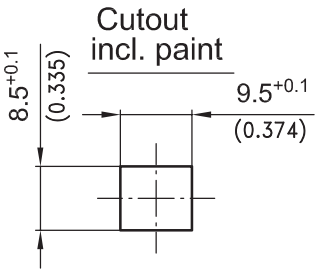

Elegant flat grip handle.

- This Handle is suitable for the computer industry, 19“ technology, insertions and equipments and other applications.
- Small space requirement.
- Designed for vertical or horizontal uses.
- To be mounted by a simple push into the appropriate cutout.

Material:

- **Grip handle:** zinc die, matt chrome plated or zinc die, black E-COATED
- **Snap wedges:** sintered steel
- **Spring:** spring steel

	clamping range Ⓢ	zinc die, matt chrome plated	zinc die, black E-COATED
Grip Handle	0.8 - 1.0	**413-9202.00-00810**	**413-9203.00-00810**
	1.1 - 1.3	**413-9202.00-01113**	**413-9203.00-01113**
	1.2 - 1.5	**413-9202.00-01215**	**413-9203.00-01215**
	2.0 - 2.2	**413-9202.00-02022**	**413-9203.00-02022**

Other Ⓢ - dimensions on request!

12/15/08

© copyright by DIRAK / Germany

DIRAK GmbH - Königsfelder Str. 1 - D-58256 Ennepetal - Phone: +49 (0) 2333/837-0 - Fax: +49 (0) 2333/837-100

DIRAK
www.dirak.com

6-1600.01 Handle

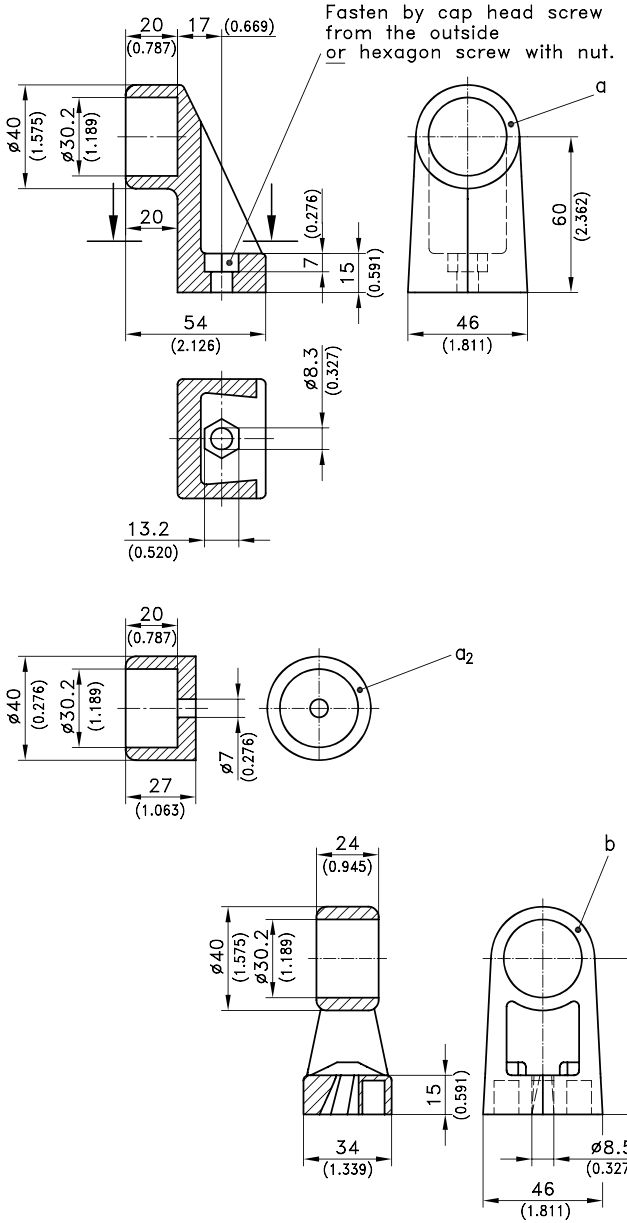

© copyright by DIRAK / Germany

DIRAK
www.dirak.com

6-1600.01 Handle

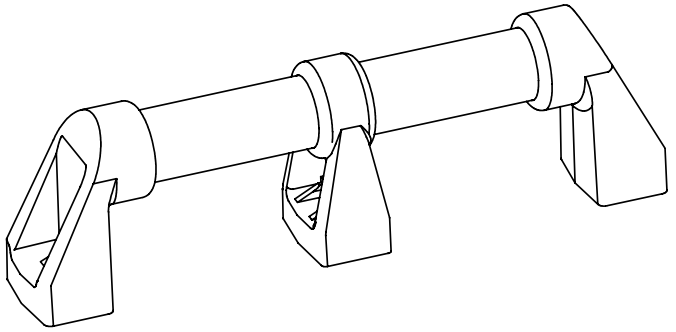

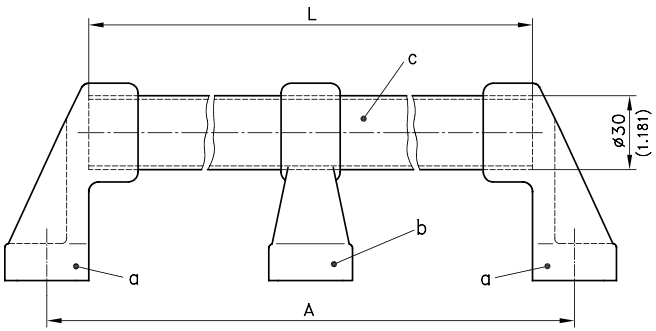

Handle with Ø30mm in various lengths.

- The handle can be composed using variable tube length.
- For vertical and horizontal applications.
- The great diameter of the tube guarantees a sure and firm grab.
- Well fitting and firm seat of the tube in the center support and the end pieces.
- For the total size please add 68mm to the tube length.
- The optional usable center supports make this handle suitable especially for large and heavy doors and controlling enclosures.
- The center support is optional but should be applied for tube length over 466mm.
- For wall fastening please take the end piece a_2).
- Fastening from inside by hexagon head screw and nut, or from outside by cylinder head screw and nut.

Material:
a) and a_2)
- **End piece:** PA, black

b)
- **Center support:** PA, black

c), c_1) and c_2)
- **Steel tube:** steel, PVC coated, black

a) End piece	**213-0101.03**
a_2) End piece	**213-0107.03**
b) Center support	**213-0102.03**

c) Steel tube Ø30 x 1.5	**213-0401**	**213-0402**	**213-0403**	**213-0404**	**213-0405**	**213-0406**
length in mm / inch	**266**/10.472	**366**/14.409	**466**/18.346	**566**/22.283	**666**/26.220	**766**/30.157
A in mm/inch with **a)**	**300**/11.811	**400**/15.748	**500**/19.685	**600**/23.622	**700**/27.559	**800**/31.496
c_1) Steel tube, Ø30 x 1.5 ; **length 2500mm** / 98.425						**213-0407**
c_2) Steel tube, Ø30 x 1.5 ; **in special lengths**						**213-0408.00-L in mm**

12/16/08

© copyright by DIRAK / Germany

DIRAK GmbH - Königsfelder Str. 1 - D-58256 Ennepetal - Phone: +49 (0) 2333/837-0 - Fax: +49 (0) 2333/837-100

DIRAK
www.dirak.com

6-1600SL Handle SNAP-LINE

Variable lenght

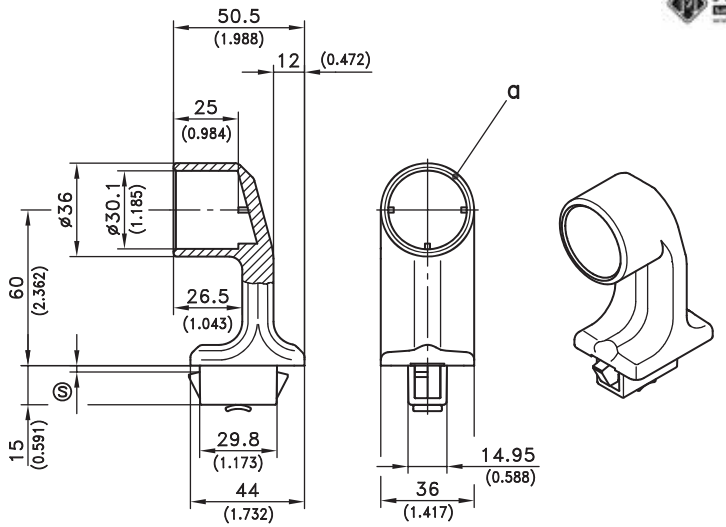

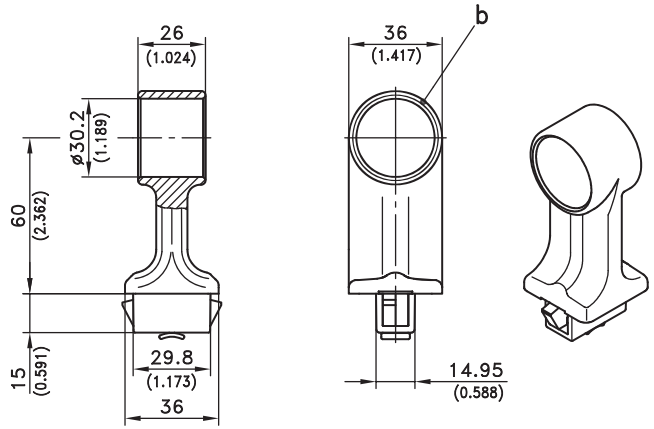

© copyright by DIRAK / Germany

DIRAK
www.dirak.com

6-1600SL Handle SNAP-LINE

Variable lenght

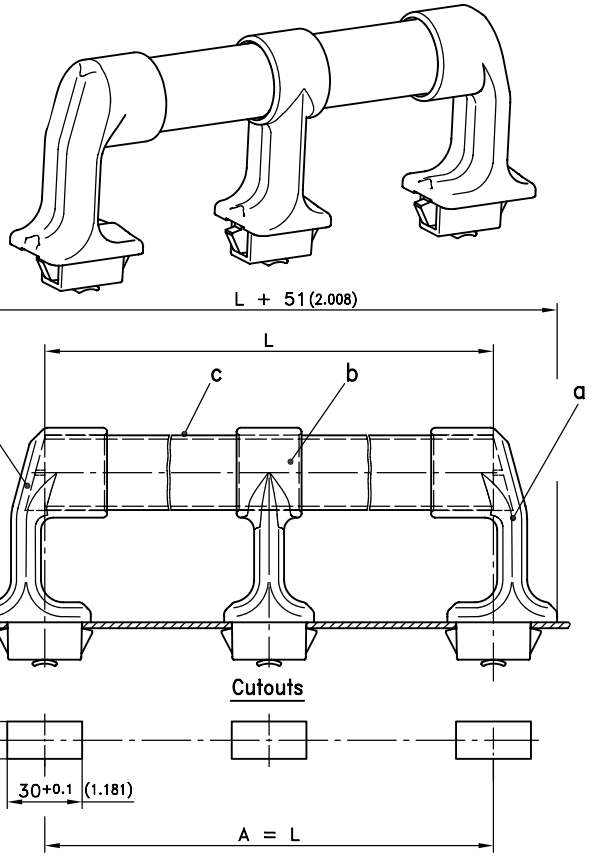

	clamping range Ⓢ	Part No.
a) End piece	1.2 - 1.7	413-9101.00-00015
	1.7 - 2.2	413-9101.00-00020
	2.2 - 2.7	413-9101.00-00025
	2.7 - 3.2	413-9101.00-00030
b) Center support	1.2 - 1.7	413-9102.00-00015
	1.7 - 2.2	413-9102.00-00020
	2.2 - 2.7	413-9102.00-00025
	2.7 - 3.2	413-9102.00-00030

c) Steel tube, Ø30x1.5	**213-0401**	**213-0402**	**213-0403**	**213-0404**	**213-0405**	**213-0406**
L=tube length mm/inch	**266**/10.472	**366**/14.409	**466**/18.346	**566**/22.283	**666**/26.220	**766**/30.157

A=Distance between the center of the cutouts of the endpieces: A = L

c_1) Steel tube, Ø30x1.5 ; **length 2500mm**/98.425 **213-0407**

c_2) Steel tube, Ø30x1.5 ; **in special length** **213-0408.00-L in mm**

Reinforcement plate for thin-walled sheets and for higher loads	**292-0701.15-01530**
Tools for uninstallation	**292-0306.80-02530 or 292-0301.15-00000**

Handle with Ø30mm tube-bar in various lengths SNAP-LINE.

- The handle can be composed using variable tube lengths.
- Insensitive to dirt and easy to clean.
- Inside radii min. 5mm.
- For vertical and horizontal applications.
- The great diameter of the tube guarantees a sure and firm grab.
- Well-fitting and firm seat of the tube in the center support and the end pieces.
- For the total size, please add 51mm to the tube length.
- The optional usable center supports make this handle suitable especially for large and heavy doors and controlling enclosures.
- The center support is optional, but should be applied for tube length over 466mm length.
- The installation is effected by a simple push into appropriate cutout.

Bridge Handle see product system 6-1001SL.

Material:

a)
- **End piece:** PA, black

b)
- **Center support:** PA, black

c), c_1) and c_2)
- **Steel tube:** steel, PVC coated, black
- **Snap wedges:** sintered steel
- **Spring:** spring steel
- **Plug:** PA, red

12/14/07

© copyright by DIRAK / Germany

DIRAK GmbH & Co. KG - Königsfelder Str. 1 - D-58256 Ennepetal - Phone: +49 (0) 2333/837-0 - Fax: +49 (0) 2333/837-100

DIRAK
www.dirak.com

6-1600.02 Handle

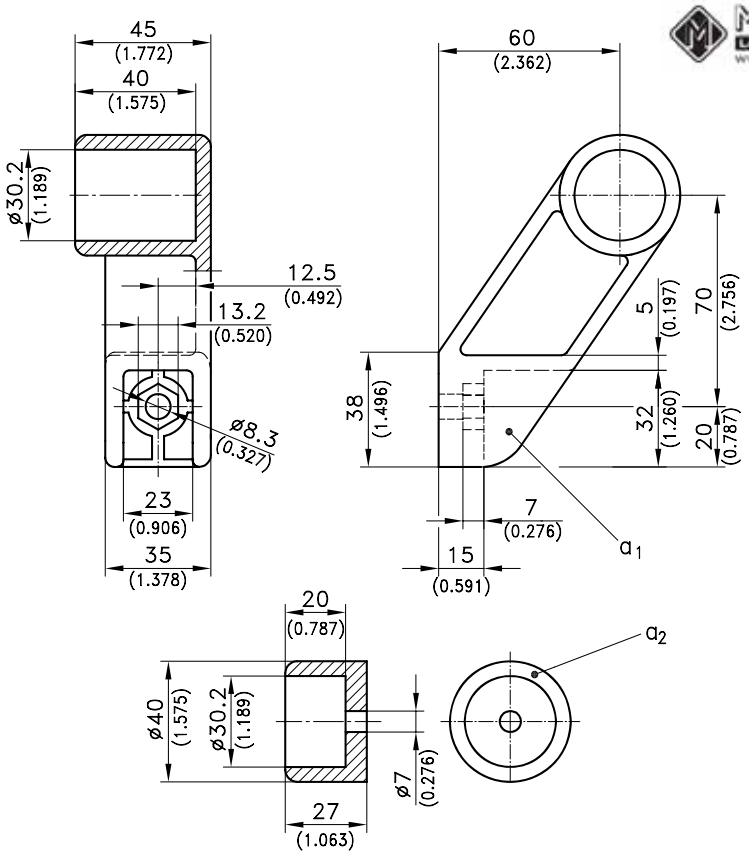

Handle, bent with Ø30mm in various lengths.

- The handle can be composed by using variable tube length.
- For vertical and horizontal applications.
- The great diameter of the tube guarantees a sure and firm grab.
- Well fitting and firm seat of the tube in the center support and the end pieces.
- For the total size please add 10mm to the tube length.
- This handle is suitable especially for large and heavy doors and controlling enclosures.
- For wall fastening please take the end piece a_2).
- Fastening from inside by hexagon head screw and nut, or from outside by cylinder head screw and nut.

Material:
a_1) and a_2)
- **End piece:** PA, black

b)
- **Center support:** PA, black

c), c_1) and c_2)
- **Steel tube:** steel, PVC coated, black

a_1) End piece, offset		RH (as drawn)					**213-0103.03**
		LH (mirror)					**213-0104.03**
a_2) End piece							**213-0107.03**
b) Center support from product system 6-1600.01 usable							**213-0102.03**
c) Steel tube, Ø30 x 1.5	**213-0401**	**213-0402**	**213-0403**	**213-0404**	**213-0405**	**213-0406**	
length in mm / inch	**266**/10.472	**366**/14.409	**466**/18.346	**566**/22.283	**666**/26.220	**766**/30.157	
A in mm/inch with **a_1)**	**241**/9.488	**341**/13.425	**441**/17.362	**541**/21.299	**641**/25.236	**741**/29.173	
c_1) Steel tube, Ø30 x 1.5 ; **length 2500mm** / 98.425							**213-0407**
c_2) Steel tube, Ø30 x 1.5 ; **in special lengths**							**213-0408.00-L in mm**

DIRAK RoHS WEEE compliant

12/16/08

© copyright by DIRAK / Germany

DIRAK
www.dirak.com

6-1680 Handle

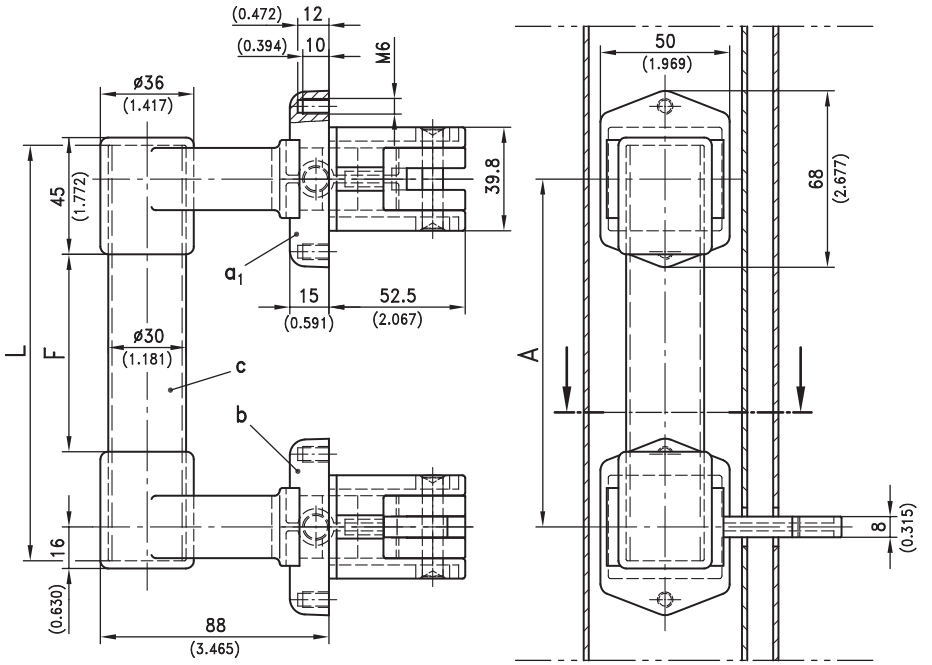

shown is a sliding–door with opening direction"left"

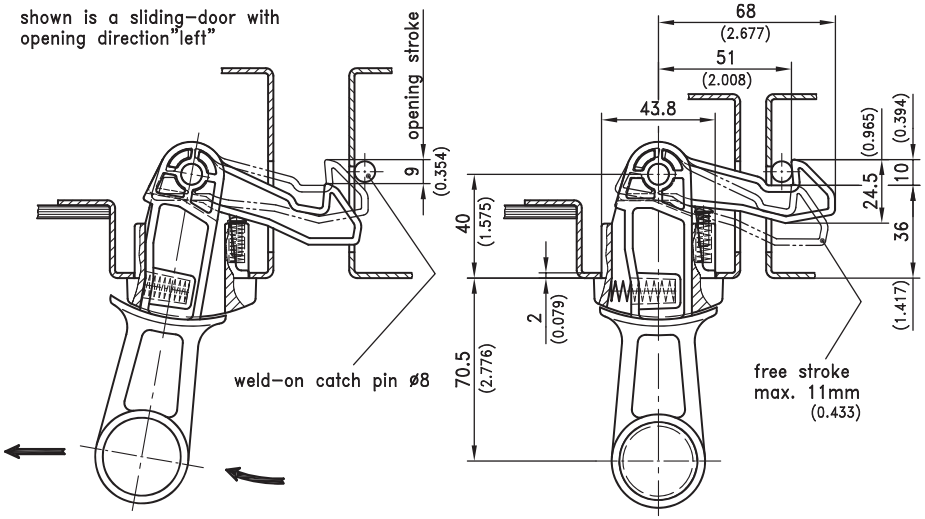

© copyright by DIRAK / Germany

DIRAK
www.dirak.com

6-1680 Handle

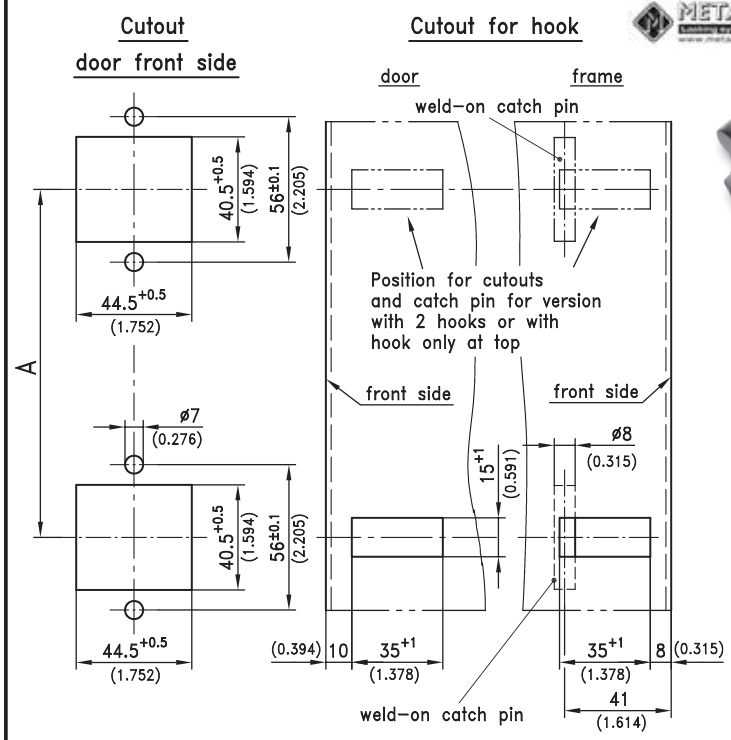

This handle has been especially designed for sliding doors on machine tools.

- The innovative idea behind this handle is the integration of sliding the door and the disengagement of the latching hook.
- This feature is possible by separating the mechanical latching from the handle, achieved by a hooked cam with a free stroke.
- Thus the annoying movement of the handle during the closing/latching process is avoided.
- Pulling the handle slightly will release the hook and the door can be opened.
- The latching devices can be linked by any 30mm round tube to create a complete handle.
- The upper and lower latching devices can be applied with or without the latching hook.

Version referring to situation as drawn			Opening direction of sliding door left	right
a) Latching device top	with	hook (not drawn)	280-9001	280-9003
a1) Latching device top	without	hook (as drawn)	280-9002	280-9004
b) Latching device bottom	with	hook (as drawn)	280-9003	280-9001
b1) Latching device bottom	without	hook (not drawn)	280-9004	280-9002

c) Handle-tube			Part-No.
L in mm/inch	**A** in mm/inch	**F** in mm/inch	
266/10.472	244/ 9.606	186/ 7.323	**213-0401**
366/14.409	344/13.543	286/11.260	**213-0402**
466/18.346	444/17.480	386/15.197	**213-0403**
566/22.283	544/21.417	486/18.134	**213-0404**
666/26.220	644/25.354	586/23.071	**213-0405**
766/30.157	744/29.291	686/27.008	**213-0406**

Material:
a), a_1), b) and b_1)

- **Base:** zinc die, black coated
- **Tube housing:** zinc die, black coated
- **Pins:** brass
- **Springs:** AISI 304 for a) and b) in addition
- **Latching hook:** steel, zinc plated

c)

- **Handle-tube:** steel tube with synthetic coating, black

12/16/08

© copyright by DIRAK / Germany

DIRAK GmbH - Königsfelder Str. 1 - D-58256 Ennepetal - Phone: +49 (0) 2333/837-0 - Fax: +49 (0) 2333/837-100

Heavy Duty Handle

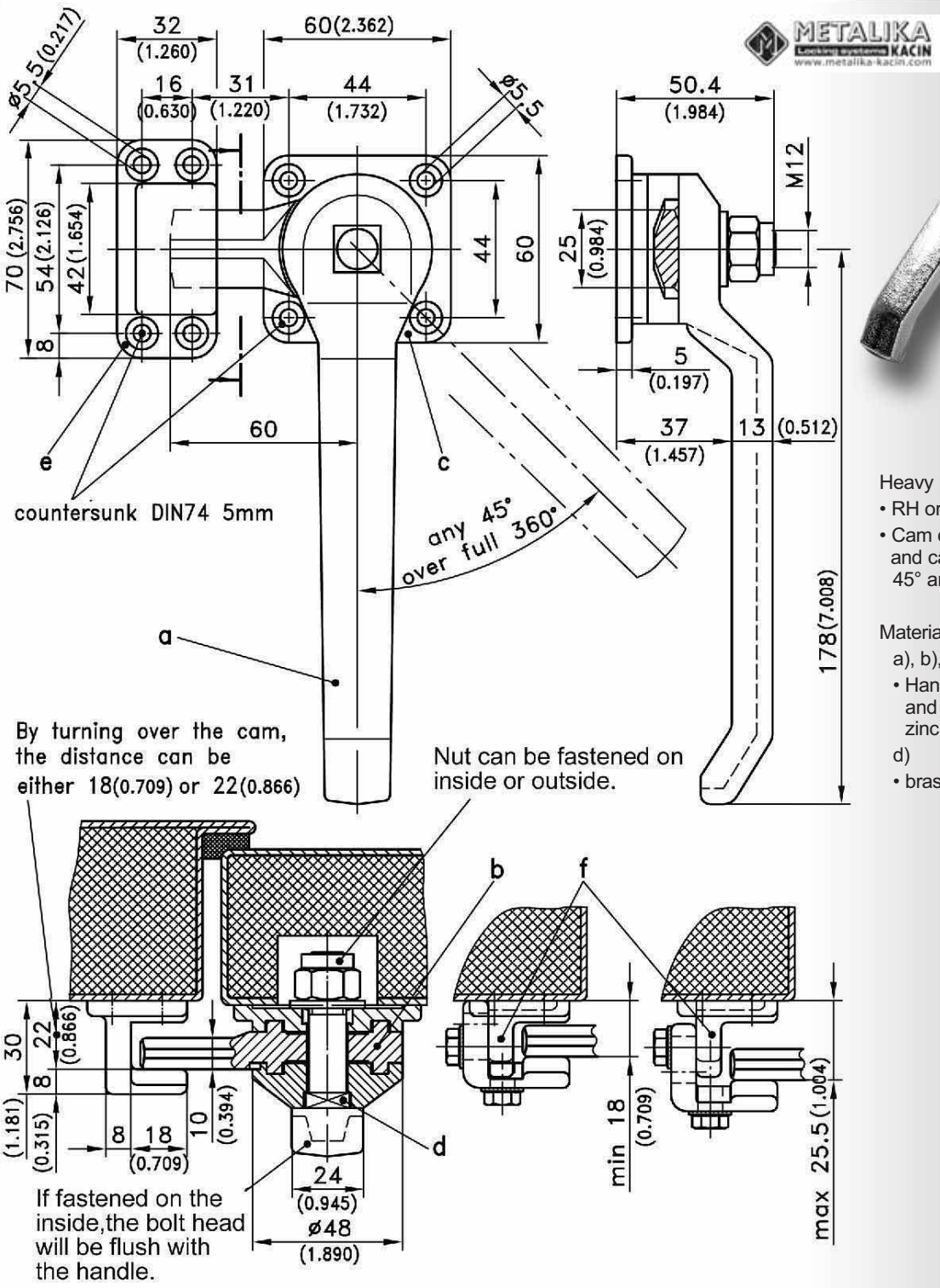

Heavy Duty handle.

- RH or LH application.
- Cam can be turned over and can be fastened at any 45° angle.

Material:

a), b), c) e) and f)

- Handle, cam, base plate and hook: cast iron, zinc plated

d)

- brass

	Part No.
a) to d) Handle, complete	**232-9001**
e) Hook	**232-1201**
f) Hook, adjustable	**232-9201**

D 12/06/02
A 3/17/03

© copyright by DIRAK / Germany

DIRAK
www.dirak.com
Now you have options!

Heavy Duty Latch System

with PA handles and bezels, handles on both sides

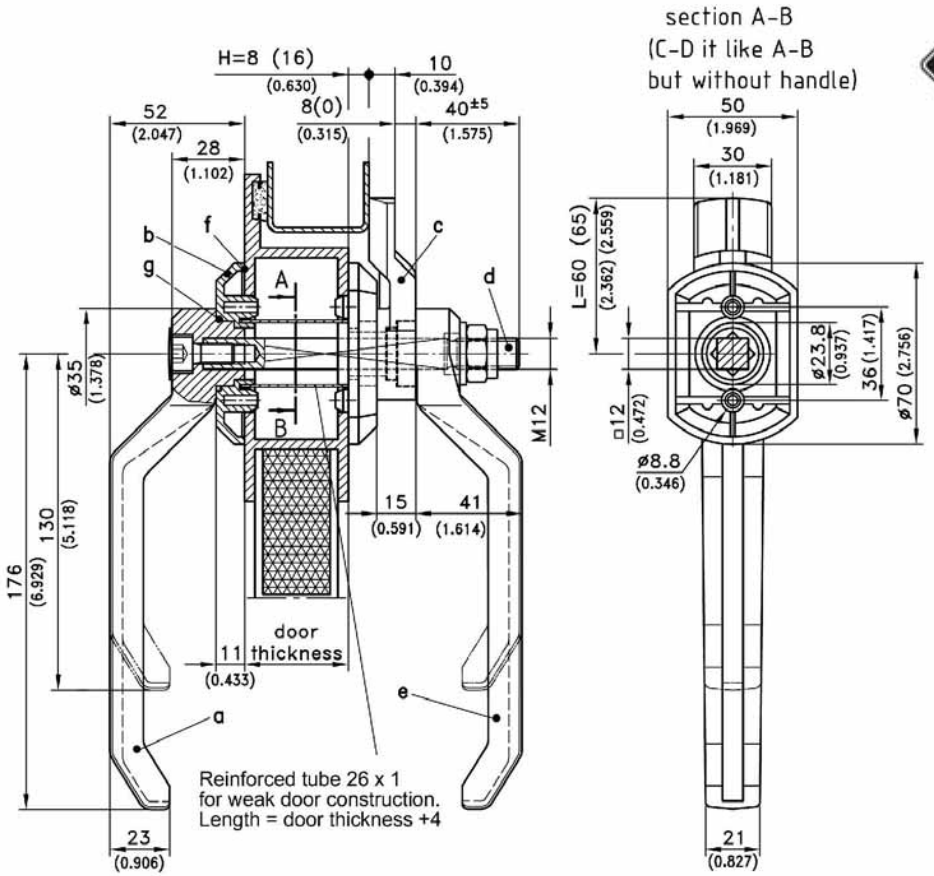

		Part No.
a) Handle outside	Length 130 / 5.118	**232-0201**
	Length 176 / 6.929	**232-0202**
a1) Handle outside	Length 130	**232-0207**
(steel galv. core)	Length 176	**232-0208**
e) Handle inside	Length 130	**232-0301**
	Length 176	**232-0302**
e1) Handle inside	Length 130	**232-0303**
(steel galv. core)	Length 176	**232-0304**
b) Bezel		**232-0402**
all bezels refer to page 6-296		
c) Cam	H= 8, L=60 / 2.362	**232-0501**
	H=16, L=65 / 2.559	**232-0502**

d) Complete shaft with socket-head screw, small cover, washer and self locking nut

Door thickness	Part-No.
20±5 / 0.787±0. 197	**232-9103**
30±5 / 1.181±0.197	**232-9104**
40±5 / 1.575±0.197	**232-9105**
50±5 / 1.969±0.197	**232-9106**
60±5 / 2.362±0.197	**232-9107**
80±5 / 3.150±0.197	**232-9109**
100±5 / 3.937±0.197	**232-9111**

To be ordered separately:
Water- and dust-tight according to IP65:

f) Flat seals see page 6-296	
g) O–Ring	**232-1501**

© copyright by DIRAK / Germany

METALIKA
Locking systems KACIN
www.metalika-kacin.com

DIRAK
www.dirak.com
Now you have options!

Heavy Duty Latch System

handle on outside only

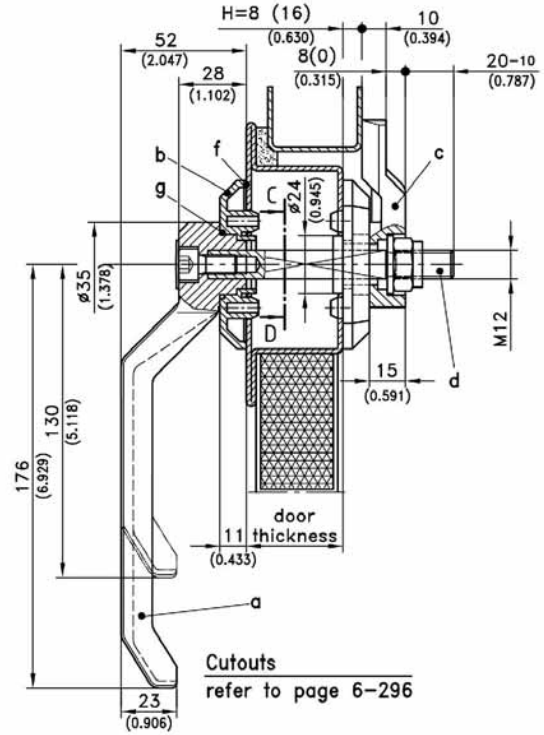

a) Handle outside	**(as left table)**
a1) Handle outside	**(as left table)**
(steel Zinc plated core)	
b) Bezel	**(as left table)**
c) Cam	**(as left table)**

d) Complete shaft with socket-head screw, small cover, washer and self locking nut

Door thickness	Part No.
20±10 / 0.787±0.394	**232-9101**
30±10 / 1.181±0.394	**232-9102**
40±10 / 1.575±0.394	**232-9103**
50±10 / 1.969±0.394	**232-9104**
60±10 / 2.362±0.394	**232-9105**
80±10 / 3.150±0.394	**232-9107**
100±10 / 3.937±0.394	**232-9109**

To be ordered separately:
Water- and dust-tight according to IP65:

f) Flat seals see page 6-296	
g) O–Ring	**232-1501**

Heavy Duty latch system with PA handles and bezels. Handle on outside only or handle both on outside and inside.

- Instead of bezels you can use the steel bearing-plate 232-0404 with bezel 232-0405 see page 6-300.

Material:

a), a1), e) and e1)
- Handle outside and inside: PA, black
- Handle core: steel, Zinc plated

b)
- Bezel: PA, black

c)
- Cam: zinc die

d)
- Shaft

D 03/12/01
A 3/17/03

© copyright by DIRAK / Germany

DIRAK®
www.dirak.com
Now you have options!

Lockable Heavy Duty Handle

for application with page 6-280

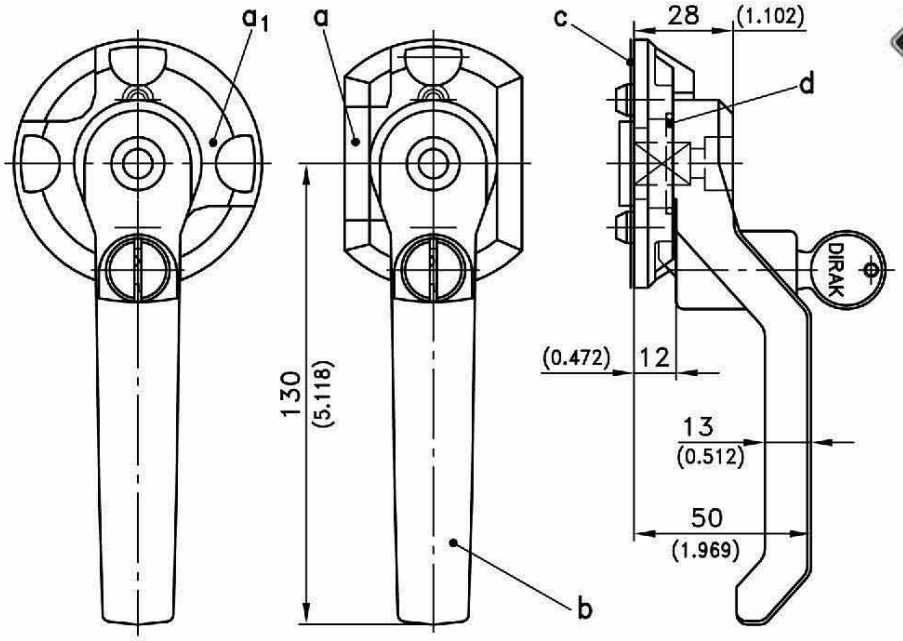

Please order separately:

a)	**Bezel, oblong** see page 6-296	**232-0409**
a1)	**Bezel, round** see page 6-296	**232-0410.00-00001**
b)	**Handle,** with barrel	
	keyed alike DIRAK 1333*	**232-9303**
	keyed alike DS200*	**532-9303**
	keyed different/mixed	**232-9304**
b1)	**Handle,** fitted with insert	
	Square 6mm	**232-9401**
	Square 7mm	**232-9402**
	Square 8mm	**232-9403**
	Square 8mm slotted	**232-9404**
	Triangular 6.5mm C.N.O.M.O. type 1	**232-9405**
	Triangular 7mm	**232-9406**
	Triangular 8mm	**232-9407**
	Triangular 9mm EDF	**232-9408**
	Double bit 3mm pin	**232-9409**
	Double bit 5mm pin	**232-9410**
	Socket hex. SW 6mm	**232-9411**
	Socket hex. SW 10mm	**232-9412**
	Socket female square 6mm	**232-9413**
	Socket female square 7mm	**232-9414**
	Socket female square 8mm	**232-9415**
	Daimler Benz type	**232-9416**
	Slotted 2mm x 4mm deep	**232-9417**
	Crown type	**232-9418**
	Recessed slot coin proof	**232-9419**
	Crescent Czech	**232-9420**
	Other versions of inserts on request	
	Water- and dust-tight according to IP65 by:	
c)	**Flat seal, for bezel oblong**	**232-1401**
c1)	Flat seal, for bezel round	**232-1402**
d)	**O-Ring**	**232-1501**

All other parts on page 6-280 and 6-296

*With stainless dust-shutter

Lockable Heavy Duty handle consists of two units, a) and b).

- Oblong bezel: For 180° rotation, with 2 stops and 2 latch recesses.
- Round bezel: For 90° rotation, with 2 stops and 4 latch recesses.

Material:

a) and a1)
- Bezel: PA, black

b) and b1)
- Handle: PA, black
- Insert: zinc die, chrome plated

D 04/12/01
A 3/17/03

© copyright by DIRAK / Germany

Bezels

round and oblong
for page 6-280 and 6-295

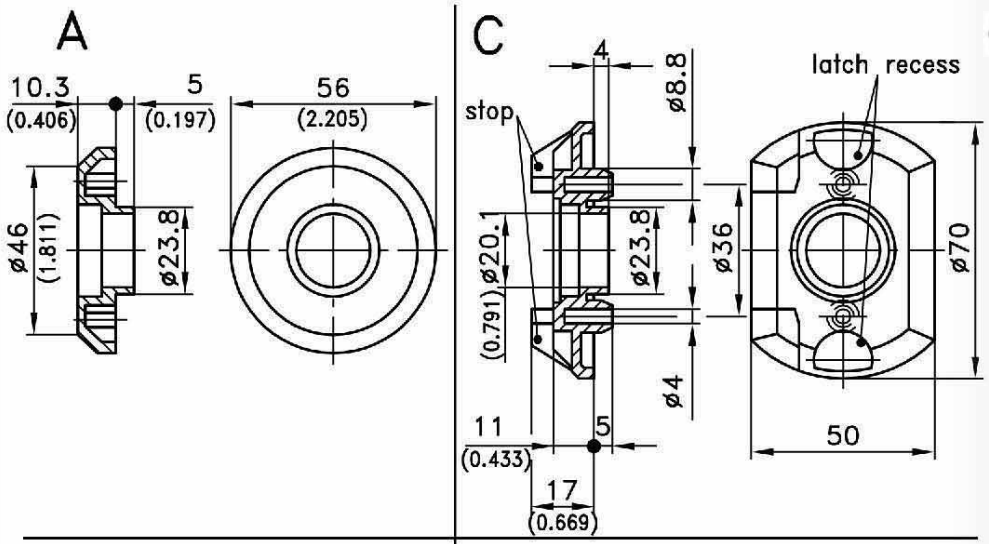

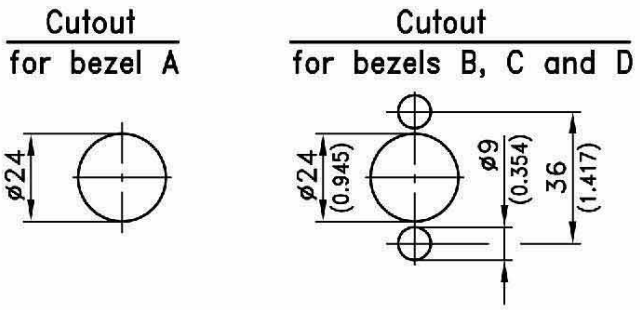

Bezels round and oblong

Material:
- Bezels: PA, black

Version		
A	**Round bezel**	**232-0401**
B	**Bezel** without stop	**232-0402**
C	**Bezel** for 180° opening angle	**232-0409**
	with 2 stops and 2 latch recesses	
D	**Bezel** with 90° opening angle, lockable	**232-0410.00-00001**
	with 2 stops and 4 latch recesses	
	Bezel like version D	**232-0410.03**
	but without latch recesses	

	Flat seal oblong for version B and C	**232-1401**
	Flat seal round for version	**232-1402**

D 04/12/01
A 3/17/03

© copyright by DIRAK / Germany

Polyamide Heavy Duty Latch

handles on both sides

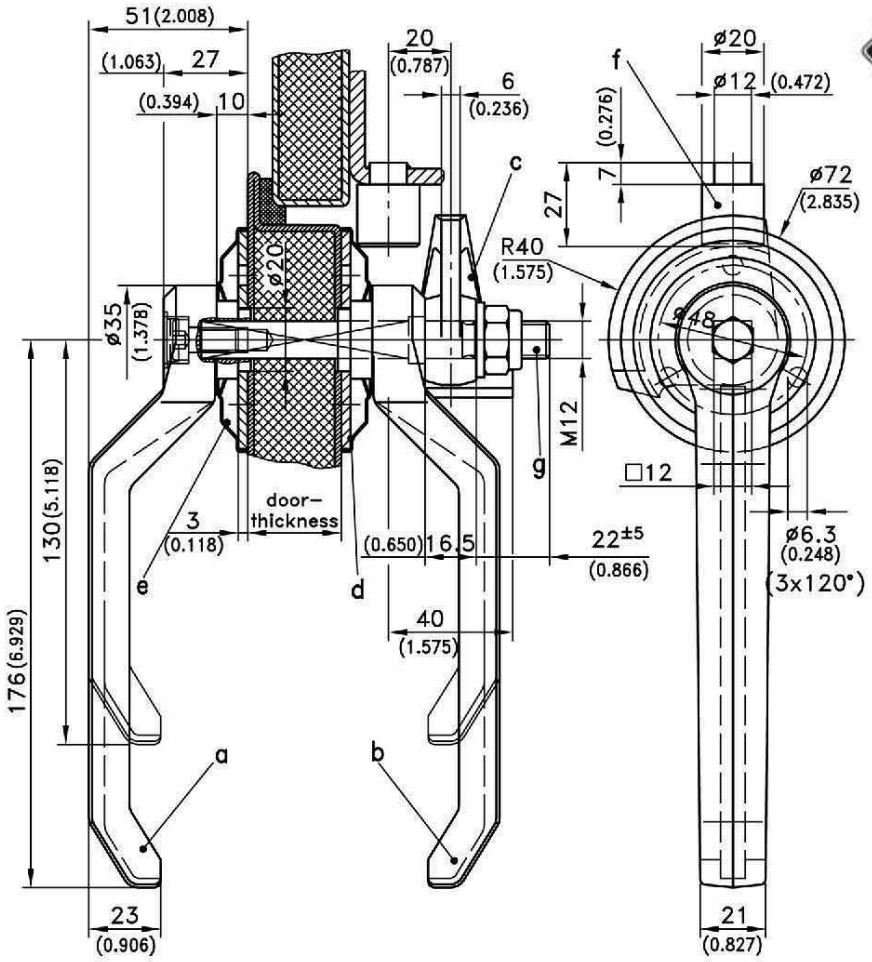

Polyamide Heavy Duty latch with handles on both sides.

- Instead of bearing d) and bezel e) you can also use the round polyamide bezel e.g. 232-0401 or polyamide bezel 232-0402 / 03 on page 6-296.

Material:

a), a_1), b) and b_1)

- Handle outside and inside: PA, black
- core for a_1) and b_1): steel, Zinc plated

c)

- Locking cam: aluminum

d), e) f) and g)

- Bearing plate, bezel, locking stub and shaft, complete: steel, Zinc plated

		Part No.
a) Handle outside	length 130 / 5.118	**232-0201**
	length 176 / 6.929	**232-0202**
a_1) Handle outside	length 130 / 5.118	**232-0207**
(with steel core)	length 176 / 6.929	**232-0208**
b) Handle inside	length 130 / 5.118	**232-0301**
	length 176 / 6.929	**232-0302**
b_1) Handle inside	length 130 / 5.118	**232-0303**
(with steel core)	length 176 / 6.929	**232-0304**
c) Locking cam		**232-0601**
d) Bearing plate steel Zinc plated		**232-0404**
e) Bezel steel Zinc plated		**232-0405**
all polyamide bezels refer to page 6-296		
f) **Locking stub**		**232-0801**

g) Complete shaft with socket-head screw, small cover, washer and self locking nut

Door thickness	Part No.
20±5 / 0.787±0.197	**232-9103**
30±5 / 1.181±0.197	**232-9104**
40±5 / 1.575±0.197	**232-9105**
50±5 / 1.969±0.197	**232-9106**
60±5 / 2.362±0.197	**232-9107**
80±5 / 3.150±0.197	**232-9109**
100±5 / 3.937±0.197	**232-9111**

D 05/07/02
A 3/17/03

© copyright by DIRAK / Germany

Polyamide Heavy Duty Latch

handle on outside

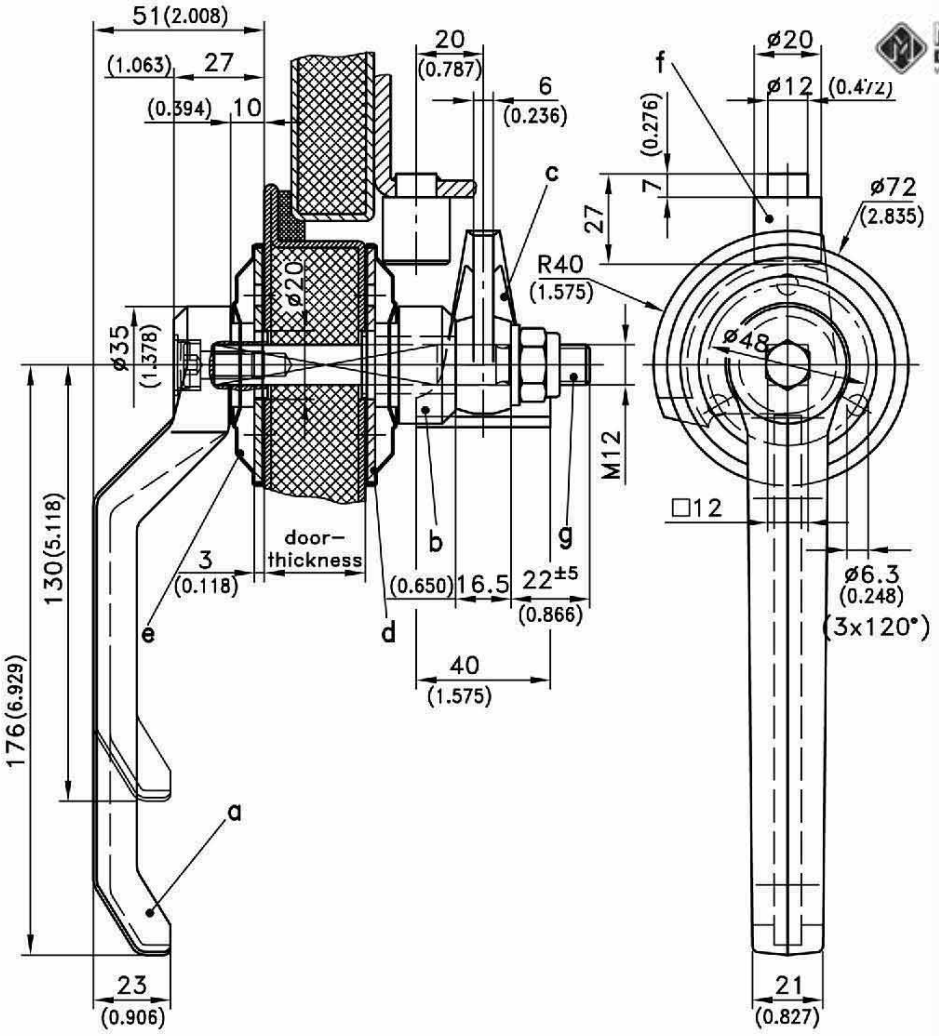

Polyamide Heavy Duty latch with handle on outside.

- Instead of bearing d) and bezel e) you can also use the round polyamide bezel e.g. 232-0401 or polyamide bezel 232-0402 / 03 on page 6-296.

Material:

a) and a_1)
- Handle outside: PA, black
- core for a_1): steel, Zinc plated

c)
- Locking cam: aluminum

b), d), e), f) and g)
- Spacer, bearing plate, bezel, locking stub and shaft, complete: steel, Zinc plated

			Part No.
a)	**Handle outside**	length 130 / 5.118	**232-0201**
		length 176 / 6.929	**232-0202**
a_1)	**Handle outside**	length 130 / 5.118	**232-0207**
	(with steel core)	length 176 / 6.929	**232-0208**
b)	**Spacer**		**232-0701**
c)	**Locking cam**		**232-0601**
d)	**Bearing plate** steel Zinc plated		**232-0404**
e)	**Bezel** steel Zinc plated		**232-0405**
	all polyamide bezels refer to page 6-296		
f)	**Locking stub**		**232-0801**

g) **Complete shaft** with socket-head screw, small cover, washer and self locking nut

Door thickness	Part No.
20±5 / 0.787±0.197	**232-9103**
30±5 / 1.181±0.197	**232-9104**
40±5 / 1.575±0.197	**232-9105**
50±5 / 1.969±0.197	**232-9106**
60±5 / 2.362±0.197	**232-9107**
80±5 / 3.150±0.197	**232-9109**
100±5 / 3.937±0.197	**232-9111**

D 05/07/02
A 3/17/03

© copyright by DIRAK / Germany

DIRAK
www.dirak.com
Now you have options!

Handles
Page 6-314

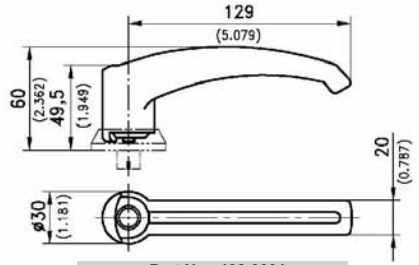

Part No. 132-9001

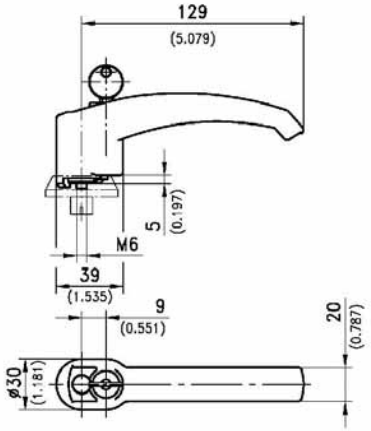

Part No. 132-9002

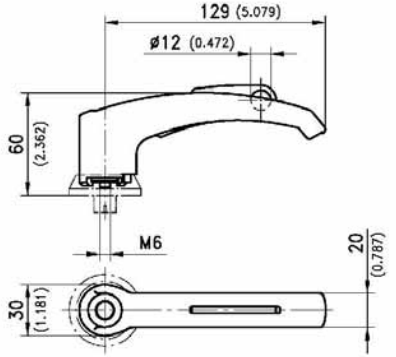

Part No. 132-9003

Control Units

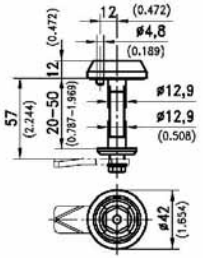

Part No. 132-9101
Page 6-316

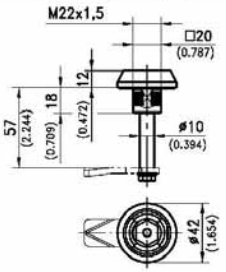

Part No. 132-9102
Page 6-315

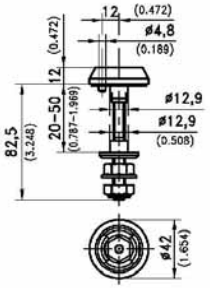

Part No. 132-9103
Page 6-316

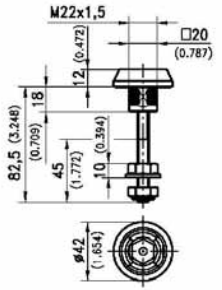

Part No. 132-9104
Page 6-315

METALIKA
Locking systems KACIN
www.metalika-kacin.com

DIRAK
www.dirak.com
Now you have options!

Klimaflex Latching System
overview

Cams with Roller
Page 6-315 and 6-316

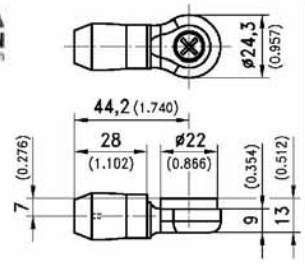

Part No. 132-9303

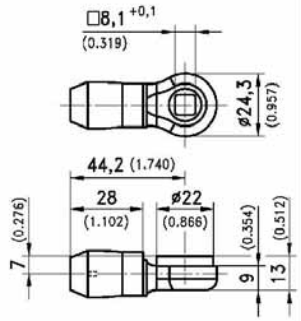

Part No. 132-9302

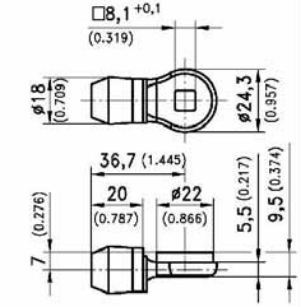

Part No. 132-9301

Accessories
Page 6-317

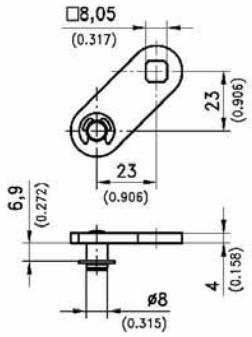

Rod Control Part No. 132-9201

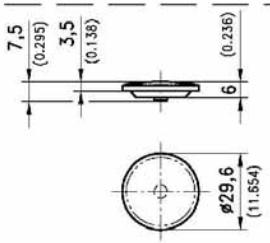

Cap Part No. 132-0101

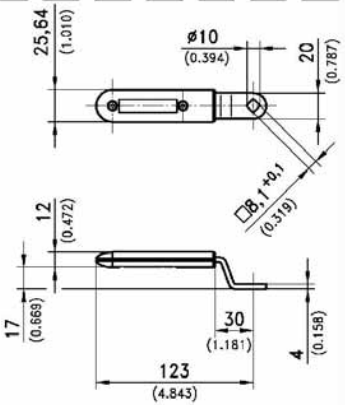

Emergency Handle Part No. 132-0201

Klimaflex is a latching system specially made for insulated doors and panels.

- The system consists of a handle, a control-unit and a cam with roller.
- Multiple point latching can be achieved with the rod-control link.

D 20/07/04
A 6/08/04

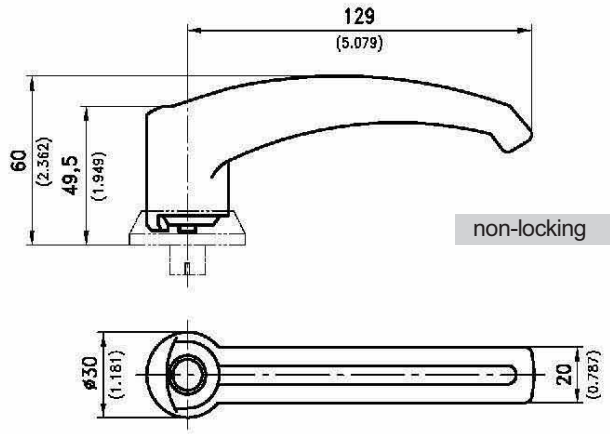

non-locking **Part No. 132-9001**

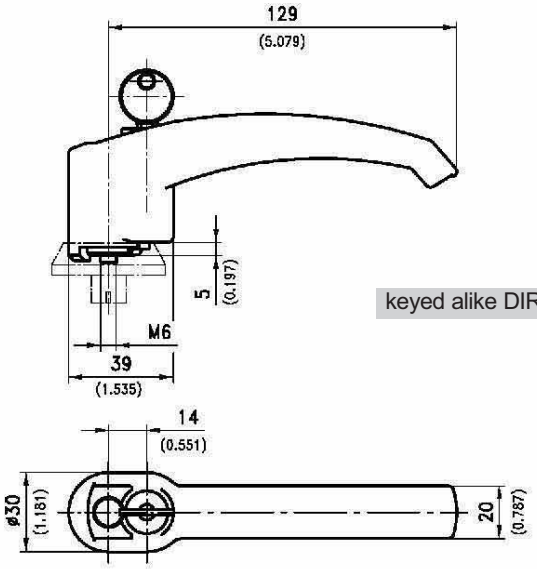

keyed alike DIRAK 1333 **Part No. 132-9002**

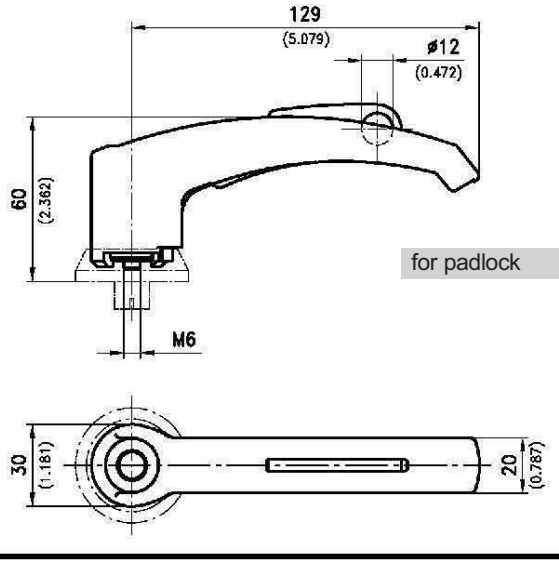

for padlock **Part No. 132-9003**

The handle is bolted to the control-unit.

- This retrofitting can be done once the complete equipment is at its final position.
- This feature makes transport easier and causes less damage.
- The fitting screw and cap are included.

Material:

- Handle and cap: PA6 with 30% fiber-glass, black.
- Fitting screw M6: steel, zinc plated

Control - Unit

for standard cutout 200-Series

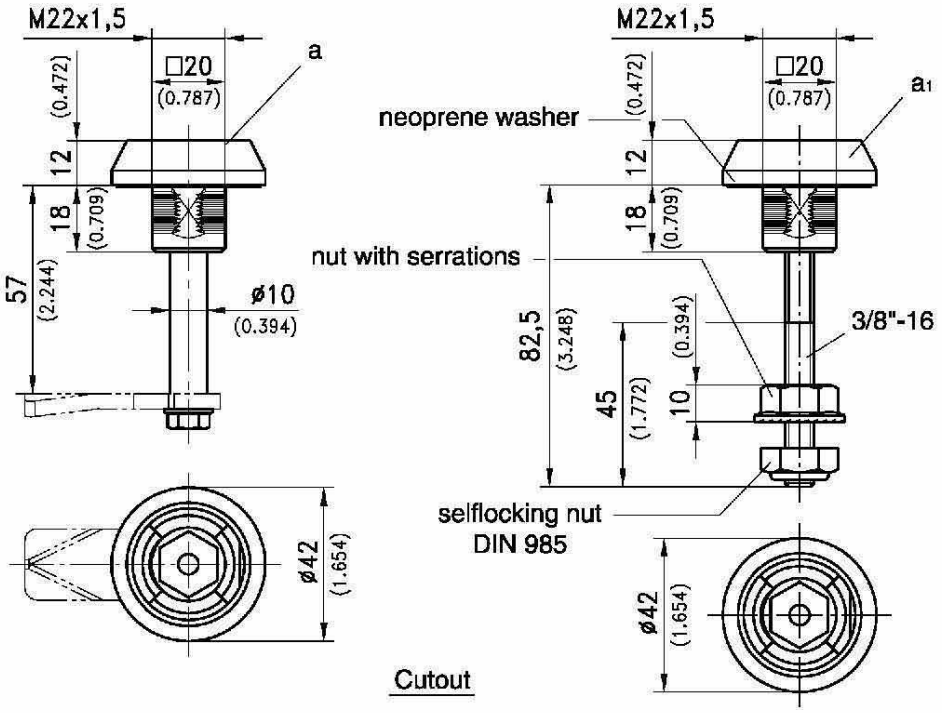

Cutout

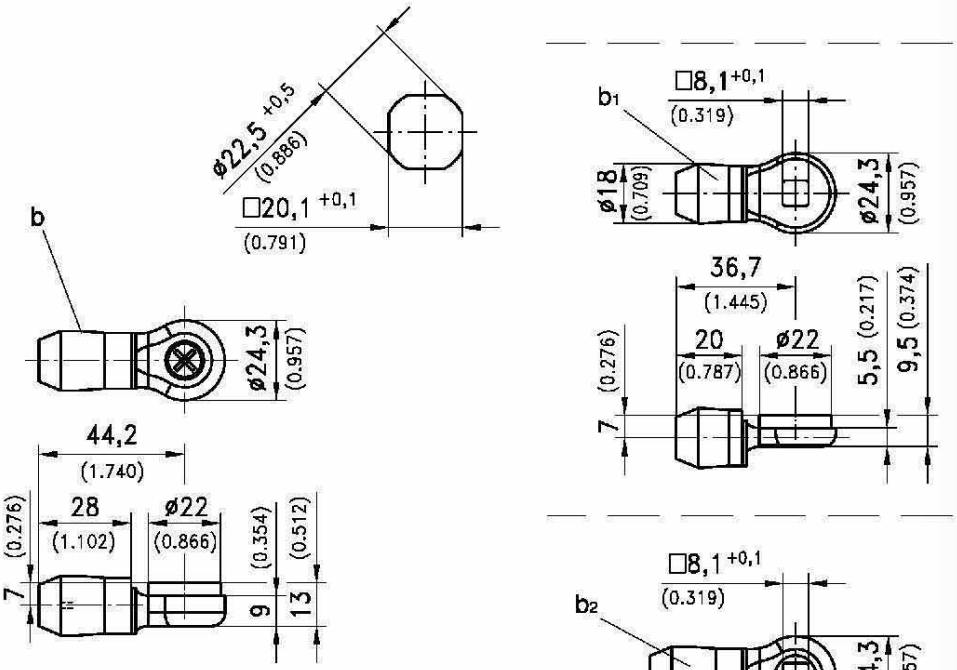

	Part No.
a) Control Unit with round shaft	**132-9102**
b) Cam with roller further cams on page 1-100	**132-9303**
c) Cap (on page 6-317)	**132-0101**
a1) Control Unit with threaded square shaft	**132-9104**
b1) Cam with roller	**132-9301**
b2) Cam with roller	**132-9302**
c) Cap (on page 6-317)	**132-0101**

Control-unit for door thicknesses from 20 to 50 mm is bolted to the outside skin of the door with a M22x1.5 nut.

- Version a)
  Application with standard 200-Series cams (Page 1-100) or with cam b)

Material:
- Shaft: steel, zinc plated
- Housing: zinc die, zinc plated
- External bezel: PA, black
- External sealing washer: neoprene
- Screw for cam: M6x10

- Version a1)

Material:
- Shaft: steel, zinc plated
- Housing: zinc die, zinc plated
- External bezel: PA, black
- External sealing washer: neoprene
- nut with serrations and selflocking nut: 3/8"-16

Material:
- Cams with rollers:
- cam: zinc die, zinc plated
- Roller: PA6, black

D 07/07/04
A 6/08/04

Control - Unit

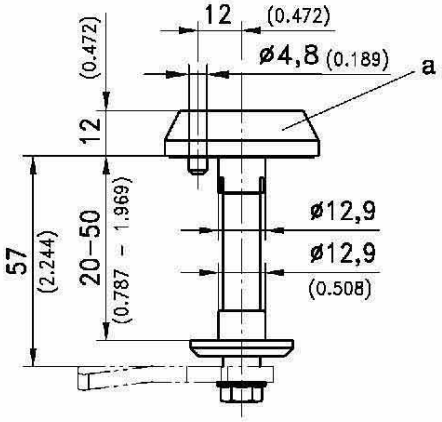

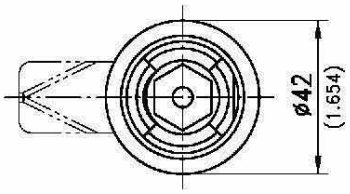

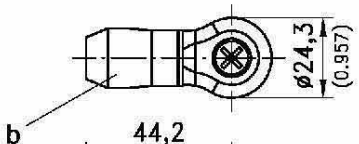

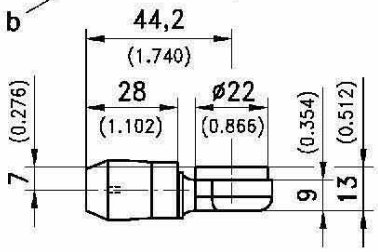

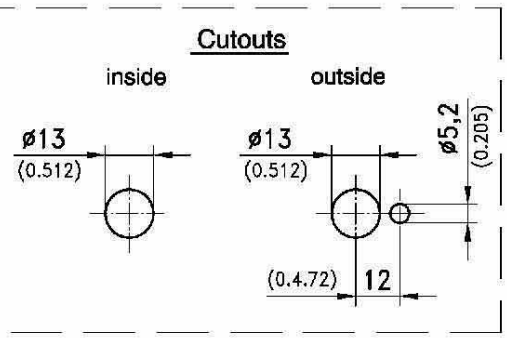

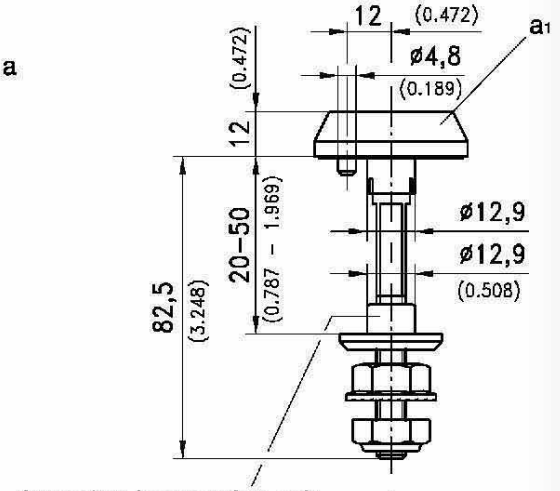

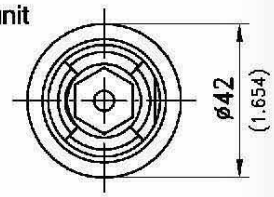

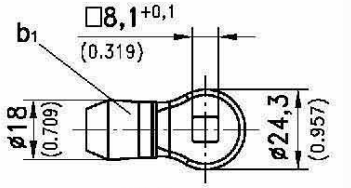

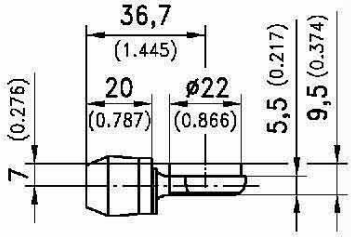

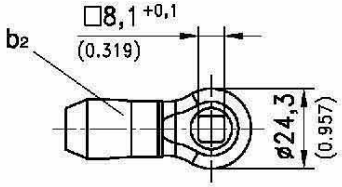

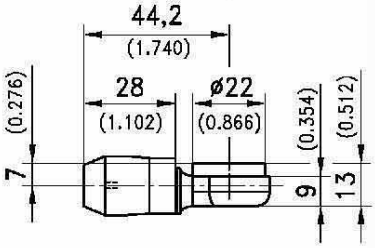

	Part No.
a) **Control Unit** with round shaft	132-9101
b) **Cam with roller** further cams on page 1-100	132-9303
c) **Cap** (on page 6-317)	132-0101
a1) **Control Unit** with square shaft	132-9103
b1) **Cam with roller**	132-9301
b2) **Cam with roller**	132-9302
c) **Cap** (on page 6-317)	132-0101

Control-unit for door thicknesses from 20 to 50 mm is fastened to the inner skin with a shaft clip on the polyamide supporting unit.

• Version a)

Material:
- Shaft: steel, zinc plated
- Housing: zinc die, zinc plated
- External bezel: PA, black
- External sealing washer: neoprene
- Screw for Cam: M6x10

• Version a1)

Material:
- Shaft: steel, zinc plated
- Housing: zinc die, zinc plated
- External bezel: PA, black
- External sealing washer: neoprene
- Nut with serrations and selflocking Nut: 3/8"-16

Material:
- Cams with rollers:
- Cam: zinc die, zinc plated
- Roller: PA6, black

D 09/03/04
A 6/08/04

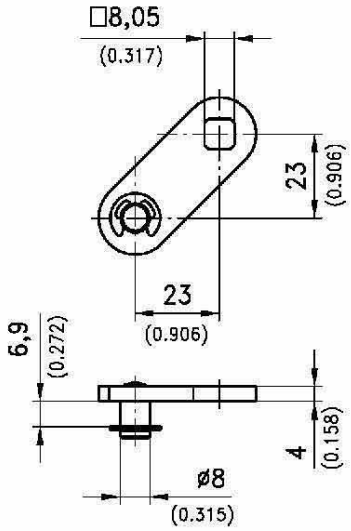

Rod control **Part No. 132-9201**

For multiple point latching

Material:
- Rod control: steel, zinc die

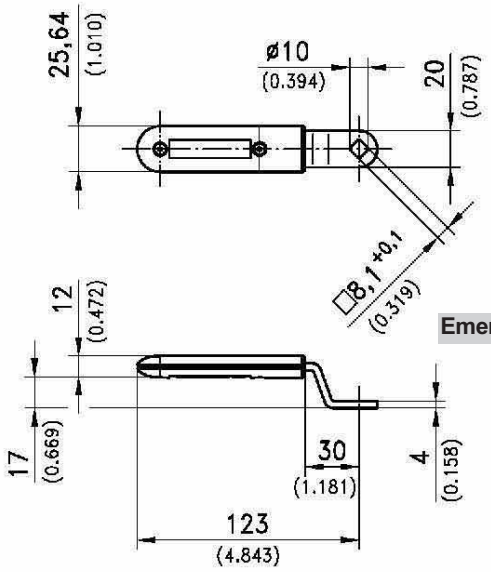

Emergency Handle **Part No. 132-0201**

With square hole.
Red emergency handle can be fitted to control units 132-9103 and 132-9104

Material:
- Emergency handle: steel, zinc plated
- Handle grips: PA6, red

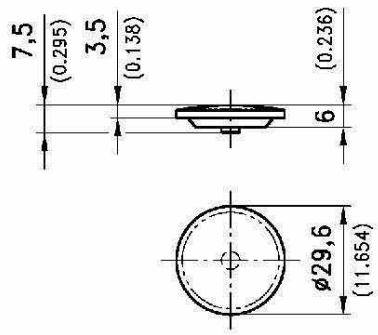

Cap **Part No. 132-0101**

Cap for control units (handle not fitted).
This cap can be easily removed.

Material:
- Cap:
  PA6 with 30% fiber-glass black

Hollow Handle

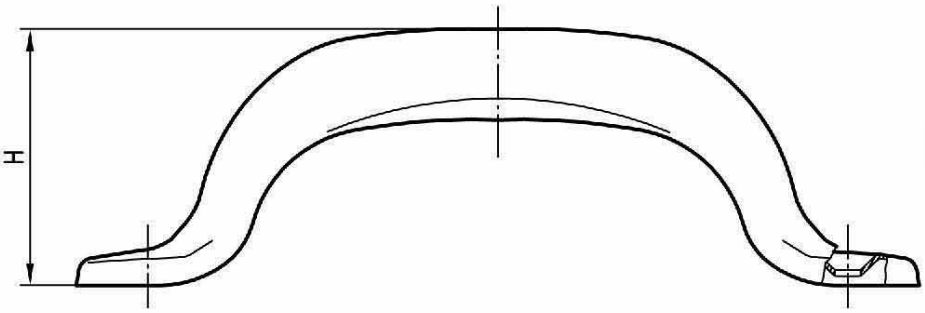

Steel hollow handles with different finishes.

Material:

- steel not plated, nickel plated or black coated

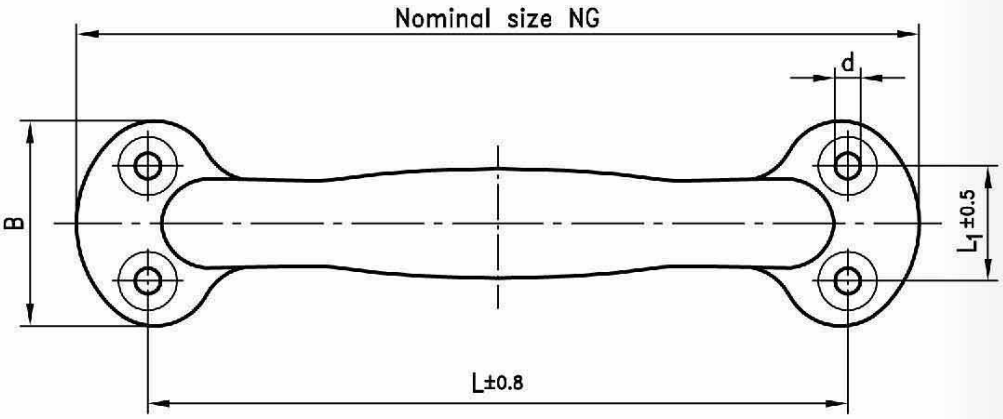

	Dimensions						Surface		
	NG	H	B	d	L	L_1	not plated	nickel plated	black coated
mm	**75**	25	18	3.0	62	10	**213-0601.00**	**213-0601.01**	**213-0601.02**
inch	2.953	0.984	0.709	0.118	2.441	0.394			
mm	**90**	28	24	3.2	75	12	**213-0602.00**	**213-0602.01**	**213-0602.02**
inch	3.543	1.102	0.945	0.126	2.953	0.472			
mm	**115**	35	28	3.5	95	15	**213-0603.00**	**213-0603.01**	**213-0603.02**
inch	4.528	1.378	1.102	0.138	3.740	0.591			
mm	**125**	36	30	3.5	106	16	**213-0604.00**	**213-0604.01**	**213-0604.02**
inch	4.921	1.417	1.181	0.138	4.173	0.630			
mm	**140**	38	32	3.8	120	17	**213-0605.00**	**213-0605.01**	**213-0605.02**
inch	5.512	1.496	1.260	0.150	4.724	0.669			
mm	**165**	42	37	4.0	141	19	**213-0606.00**	**213-0606.01**	**213-0606.02**
inch	6.496	1.654	1.457	0.157	5.551	0.748			
mm	**200**	50	45	5.0	167	24	**213-0607.00**	**213-0607.01**	**213-0607.02**
inch	7.874	1.969	1.772	0.197	6.575	0.945			

Other materials and surfaces on request

Locking Bar System

Heavy Duty

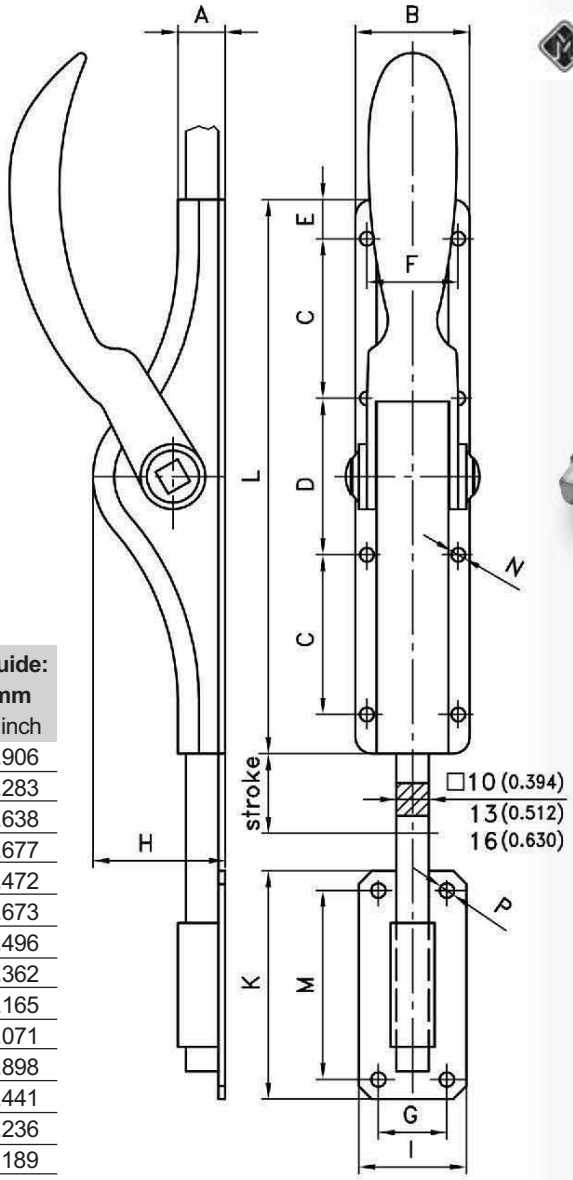

Locking bar system, for heavy doors.

- The rod is supplied complete. Both ends can be connected to the gear mechanism. This allows any positioning of the gear casing.

Material:

a) and b)

- Gear mechanism: steel, Zinc plated

Dimensions of gear casing and Rod Guide:

	□10mm **mm** / inch	□13mm **mm** / inch	□16mm **mm** / inch
A	**14.5** / 0.571	**18.5** /0.728	**23** / 0.906
B	**35** / 1.378	**42** / 1.654	**58** / 2.283
C	**49** / 1.929	**53** / 2.087	**67** / 2.638
D	**48** / 1.890	**46** / 1.811	**68** / 2.677
E	**12** / 0.472	**13** / 0.512	**12** / 0.472
F	**28** / 1.102	**28** / 1.102	**42.5** /1.673
G	**21** / 0.827	**23** / 0.906	**38** / 1.496
H	**40.5** / 1.594	**44.5** /1.752	**60** / 2.362
I	**33** / 1.299	**36** / 1.417	**55** / 2.165
K	**70** / 2.756	**70** / 2.756	**78** / 3.071
L	**170** / 6.693	**178** / 7.008	**226** /.8.898
M	**58** / 2.283	**58** / 2.283	**62** / 2.441
N	**4.3** / 0.169	**5.5** / 0.217	**6** / 0.236
P	**4.5** / 0.177	**4.8** / 0.189	**4.8** / 0.189

		Cross-section of rod		
		□10	□13	□16
a)	**Gear mechanism without** rod but with Rod Guides	**249-9000**	**249-9100**	**249-9200**
b)	**Gear mechanism with** rod 1500mm/59" long and Rod Guides	**249-9001**	**249-9101**	**249-9201**
b_1)	**as b)** but rod length 2000mm / 79"	**249-9002**	**249-9102**	**249-9202**
b_2)	**as b)** but rod length 2500mm / 98"	**249-9003**	**249-9103**	**249-9203**
b_3)	**as b)** but rod length 3000mm / 118"	**249-9004**	**249-9104**	**249-9204**
	Number of Rod Guides	**2**	**3**	**4**
	Rod stroke	**19** / 0.748	**19** / 0.748	**28** / 1.102
c)	**Additional Rod Guide**	**249-0401**	**249-0402**	**249-0403**
d)	**Rod catching plate** straight (not shown)	**249-0201**	**249-0202**	**249-0203**
d_1)	**Rod catching plate** angled (not shown)	**249-0301**		**249-0302**
e)	**Rod catching bushing** for concrete (2 parts) (not shown)	**249-9401**	**249-9402**	**249-9403**

D 11/07/02
A 3/17/03

METALIKA
Locking systems KACIN
www.metalika-kacin.com

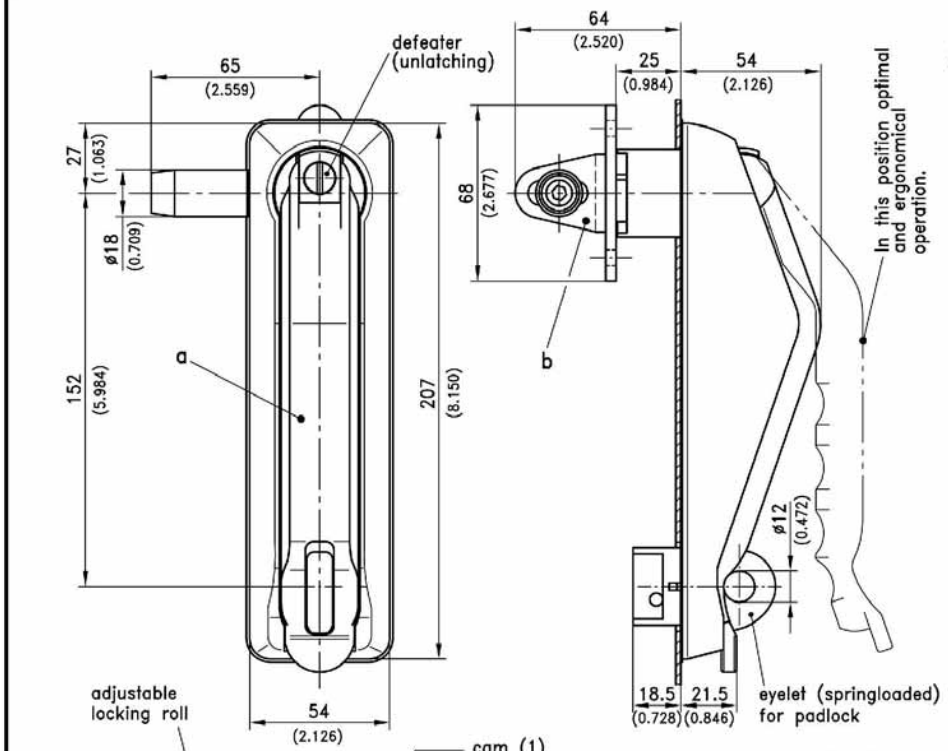

© copyright by DIRAK / Germany

Swinghandle-ERGOLINE

Cutouts

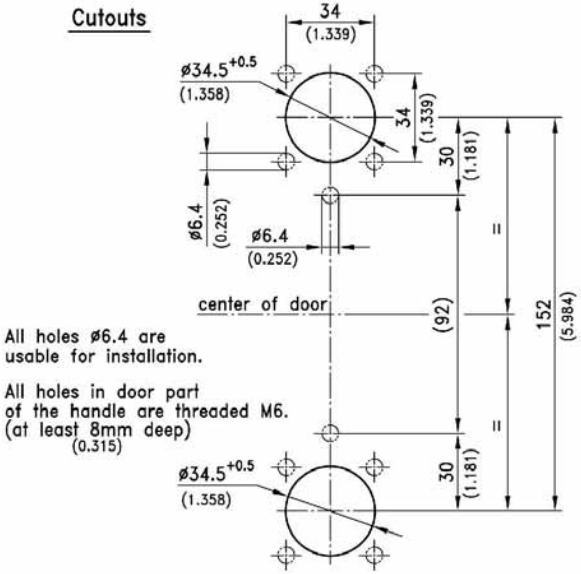

Heavy Duty Swinghandle with ergonomically shaped handle.

- Especially suitable for heavy electrical enclosures.
- Padlockable
- RH and LH application.
- After lifting the spring-loaded eyelet and opening the handle, an additional 90° rotation clockwise of the defeater is necessary to unlock the handle.
- All holes are positioned symmetrically to the door center, allowing the same door for LH and RH applications.

Material:

a) and a_1)
see chart

b)
- Cam: steel, Zinc plated (yellow)
- Locking roll: PA, black
- Tenon block of cam: zinc die, untreated

b_1)
- Locking rod drive and stop disk: steel, zinc plated

	zinc die chrome plated	zinc die black coated
a) Swinghandle with 90° stop disk and locking-rod drive	**276-9002**	**276-9003**
	Combined finishes	
	handle chrome plated dish black coated	**handle black coated dish chrome plated**
a_1) **Swinghandle** with 90° stop disk and locking-rod drive	**276-9004**	**276-9005**
b) Cam		**276-8701**
b_1) **Cam complete,** with locking rod drive, stop disk and screw		**276-9001**

D 09/01/03
A 3/17/03

© copyright by DIRAK / Germany

DIRAK
www.dirak.com

7-072 Dish Handle PrA

stainless steel

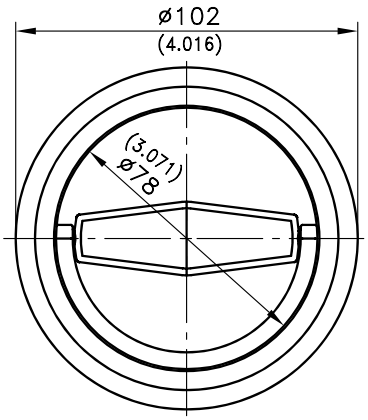

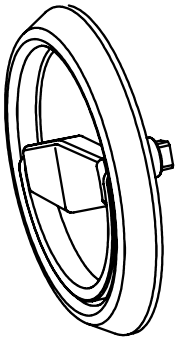

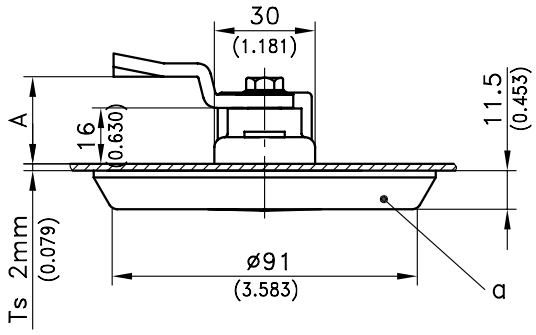

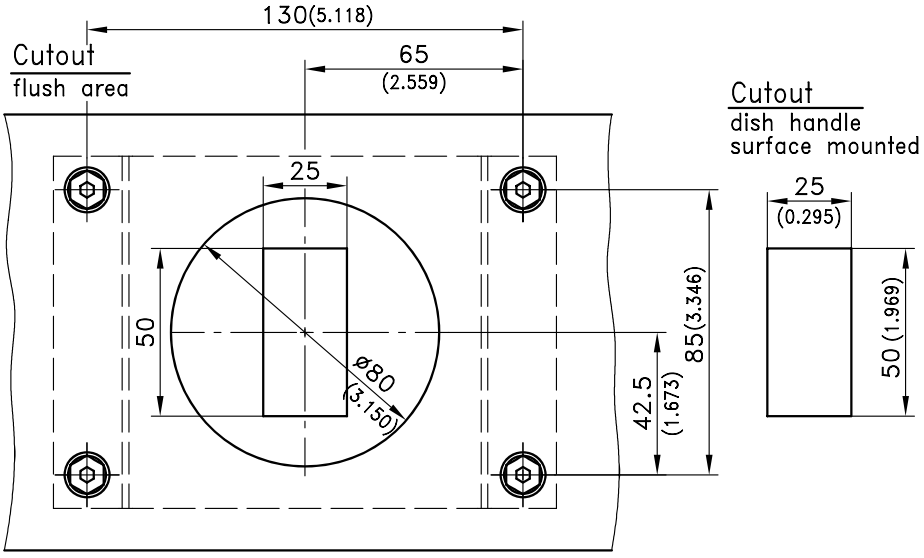

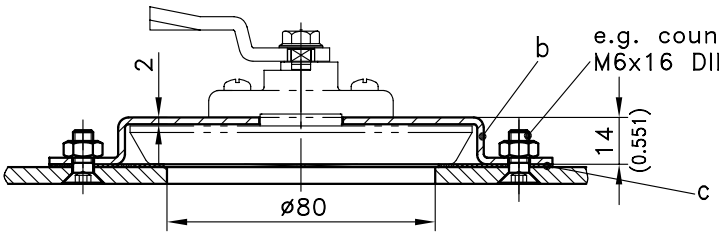

Dish Handle for 2- or 3-point cam.

- Water- and dust-tight according to IP65 EN 60529.
- Properties of material AISI 316 Ti:
  The titanium increases even further the corrosion resistance particularly the intercristalline corrosion at the grain boundaries.

Material:

a) and b)

- **Dish Handle and adapter bracket:** AISI 316Ti, cast

c)

- **Flat seal:** Inducon

a) Dish Handle with O-rings (IP65)	**208-9638**
cams resp. 3- point cams	
see product system 7-080 / 7-105	
Optional for flush area mounting:	
b) Adapter bracket	**207-3605.90**
c) Flat seal	**200-0905**

12/16/08

© copyright by DIRAK / Germany

DIRAK GmbH - Königsfelder Str. 1 - D-58256 Ennepetal - Phone: +49 (0) 2333/837-0 - Fax: +49 (0) 2333/837-100

DIRAK
www.dirak.com

7-073 Handle
for Padlock, stainless steel

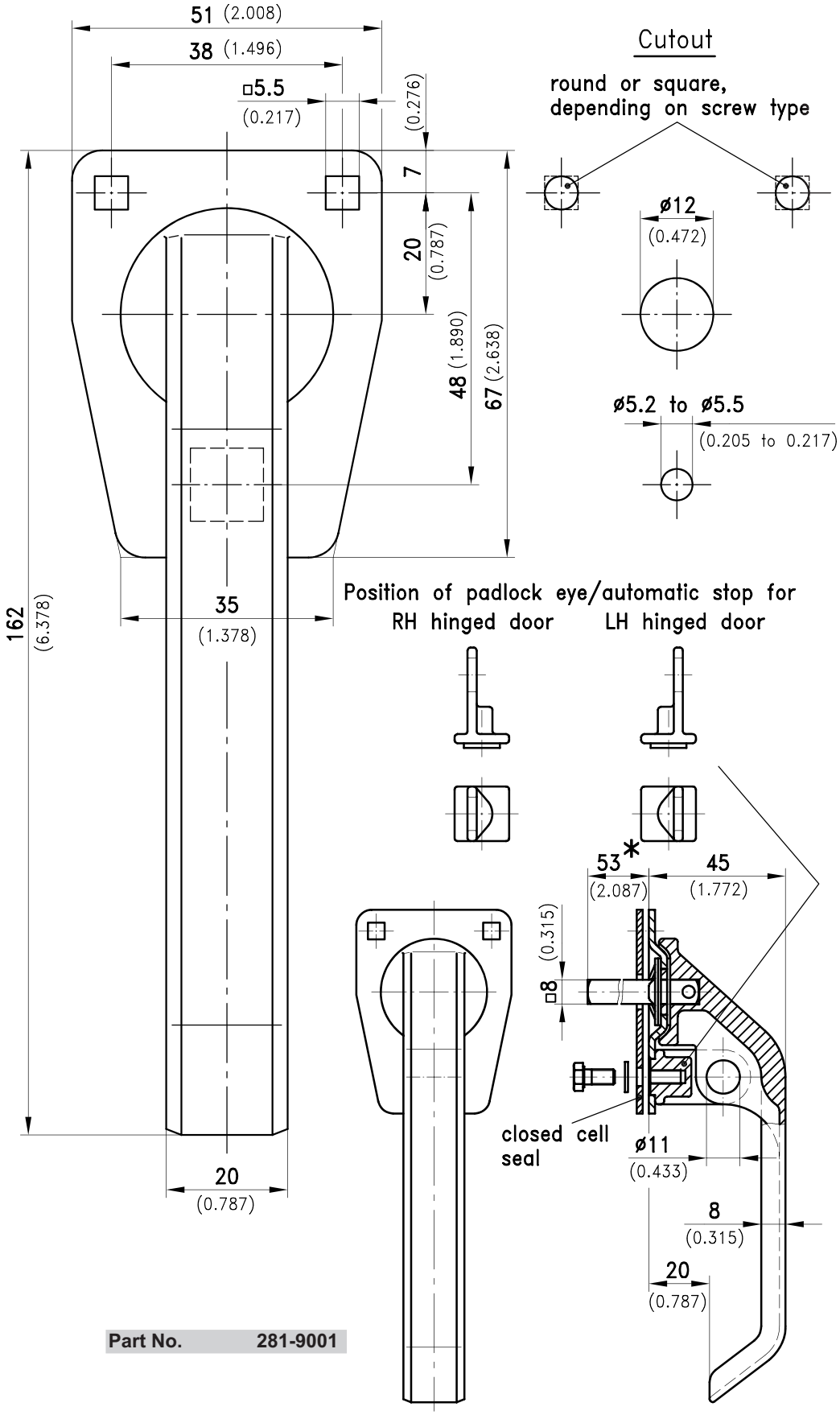

L-Handle Heavy Duty for padlock.

- The padlock eye is asymmetric creating an automatic stop in closed position for RH and LH hinged doors.
- The position of this padlock eye prevents injuries when closing.
- The handle is sealed to IP65 (NEMA 4/12).
- The seal, screw and washer are included.

Material:

- **L-Handle:** AISI 316, surface polished
- **Padlock eye and shaft:** AISI 316, untreated
- **Mounting plate:** AISI 304, untreated
- **Hex. screw (M5x10) and flat washer (5mm):** AISI 304
- **Gasket:** closed cell, EPDM

* For longer and/or 3/8-16 UNC threaded shafts, please consult DIRAK.

Part No. **281-9001**

12/16/08

© copyright by DIRAK / Germany

DIRAK GmbH - Königsfelder Str. 1 - D-58256 Ennepetal - Phone: +49 (0) 2333/837-0 - Fax: +49 (0) 2333/837-100

Front mounted grab handle 50 mm

Part number	Material	Finish	A	B	C	Weight (g)
19-1-3798	steel	chrome plated	50	25	35	46

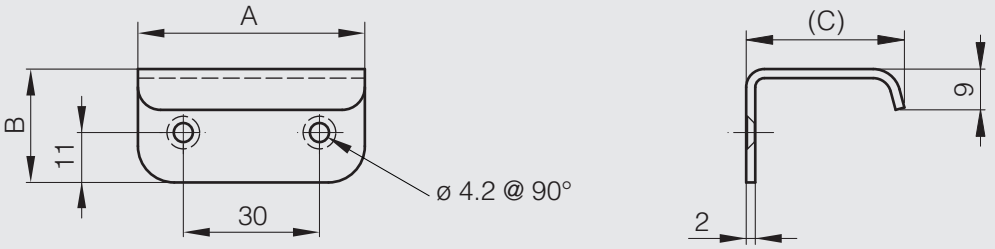

Front mounted grab handle 88 mm

Complete with wood screws

Part number	Material	Finish	A	B	F	Weight (g)
19-7-3693	304 stainless steel	mirror polished	88	25	100	68.5

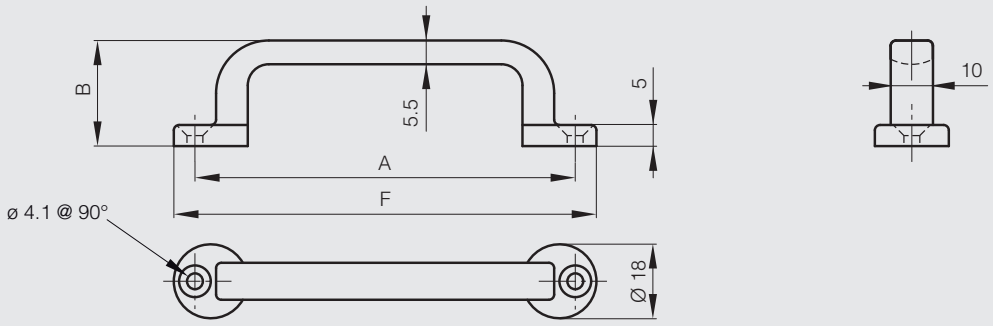

Grab handles

Front mounted grab handles 107 mm in steel or stainless steel

Handle made from galvanised steel is pregalvanised. Therefore any cut surface is ungalvanised.

Part number	Material	Finish	A	B	C	F	Weight (g)
19-1-3807	galvanised steel	raw	107	21	15	120	32
19-1-3797	304 stainless steel	deburred	107	21	15	120	32

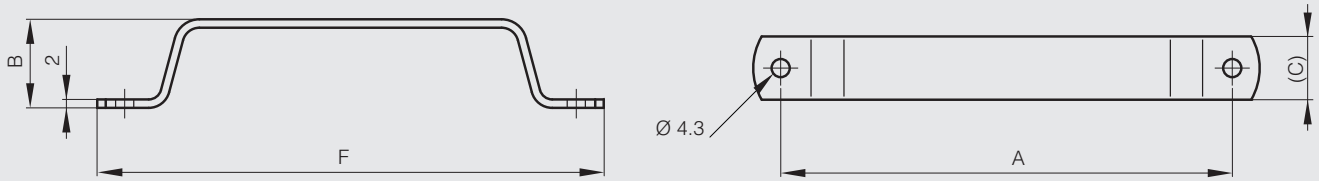

Front mounted grab handle 107 mm - zinc die-cast

Part number	Material	Finish	A	B	C	F	Weight (g)
19-7-3639	zinc die-cast	chrome plated	107	22	14	120	40

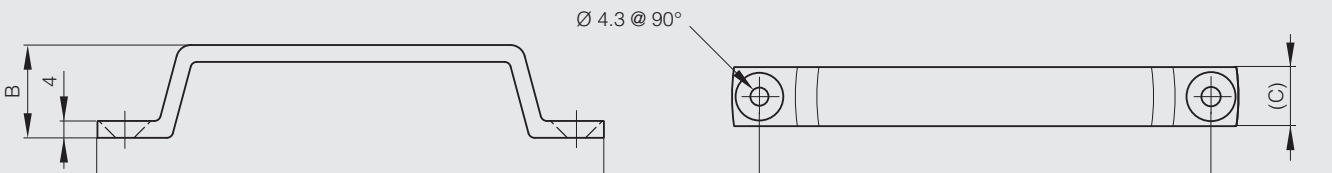

Front mounted grab handle 125 mm

Part number	Material	Finish	A	B	F	Weight (g)
19-7-3343	steel	zinc plated	125	38	140	68

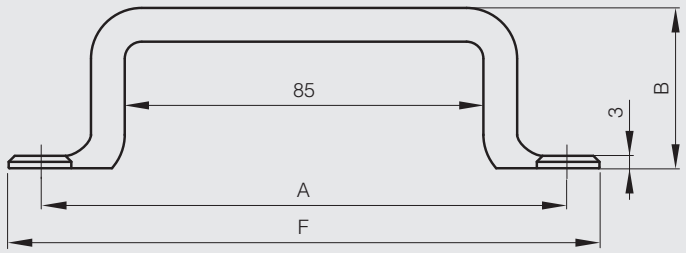

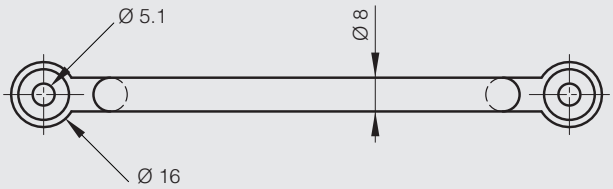

Front mounted grab handles 106 and 126 mm

Complete with wood screws

Part number	Material	Finish	A	B	C	D	E	F	G	H	S	Weight (g)
19-7-3694	304 stainless steel	mirror polished	106	27	24	7	5	120	24	12	4.1	131
19-7-3695	304 stainless steel	mirror polished	126	33	30	8	6	150	30	15	5.3	242

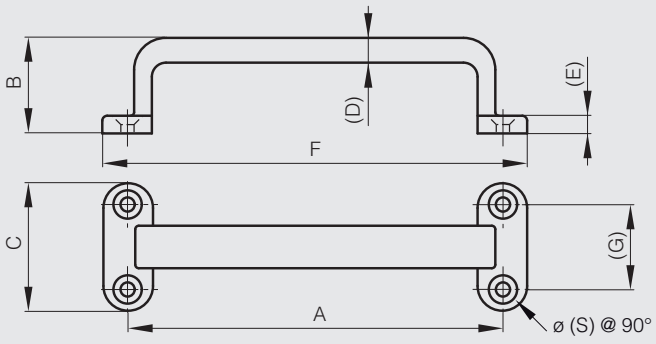

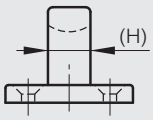

Front mounted grab handles 122 and 150 mm

Part number	Material	Finish	A	B	C	D	E	F	Weight (g)
87-7-2201	polyamide	matt black	122	40	26	8	12	142	42.2
87-7-2203	polyamide	matt black	150	52	28	10	13	170	70.8

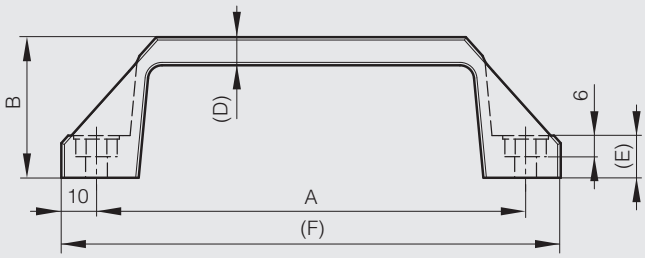

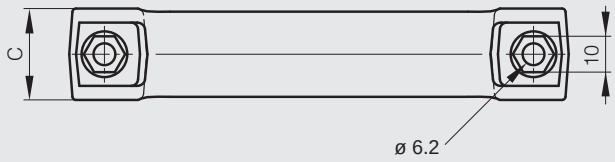

Front mounted grab handles 124 and 137 mm

Part number	Material	Finish	A	B	C	E	F	G	S	Weight (g)
19-7-3304	steel	raw	137	53	36	26	158	20	5	49
19-7-3307	steel	nickel plated	124	53	36	26	143	16	4	37
19-7-3308	steel	nickel plated	137	53	36	26	158	20	5	49

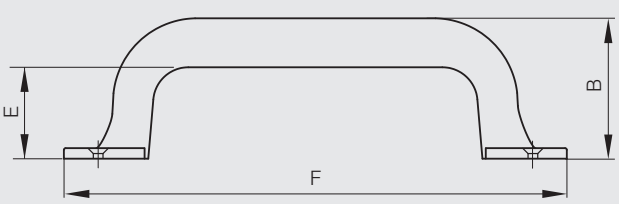

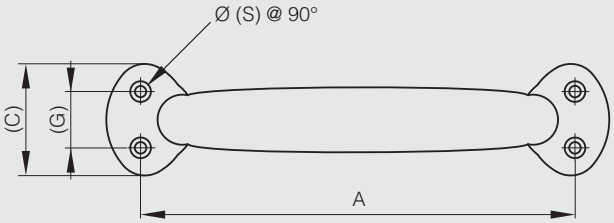

Rear mounted grab handle 110 mm

Part number	Material	Finish	A	B	D	L	M	Weight (g)
19-1-3424	304 stainless steel	polished	110	35	8	11	5	61

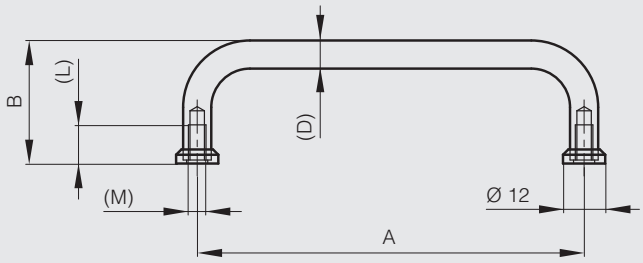

Rear mounted grab handles 92 and 108 mm

Part number	Material	Finish	A	B	D	L	M	Weight (g)
19-1-3425	aluminium	polished	92	32	10	10	5	26
19-1-3672	aluminium	polished	108	39	10	10	4	30

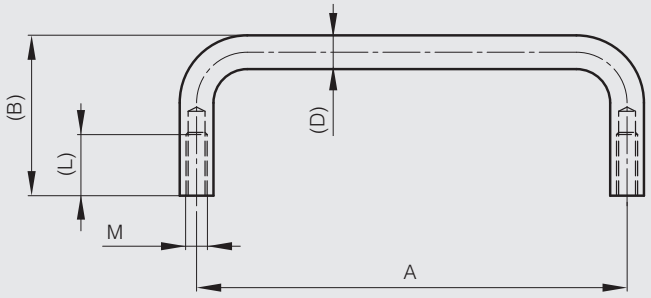

Rear mounted grab handles 52 to 120 mm

Part number	Material	Finish	A	B	D	L	M	Weight (g)
19-7-3683	aluminium	clear anodised	52	34	8	10	4	14
19-7-3684	aluminium	clear anodised	80	34	8	12	4	17
19-7-3409	aluminium	polished	100	30	7	8	4	14
19-7-3685	aluminium	clear anodised	100	34	8	12	4	20
19-7-3410	brass	chrome plated	100	30	7	8	4	44
19-7-3411	brass	nickel plated	100	30	7	8	4	44
19-7-3686	aluminium	clear anodised	120	34	8	10	4	23

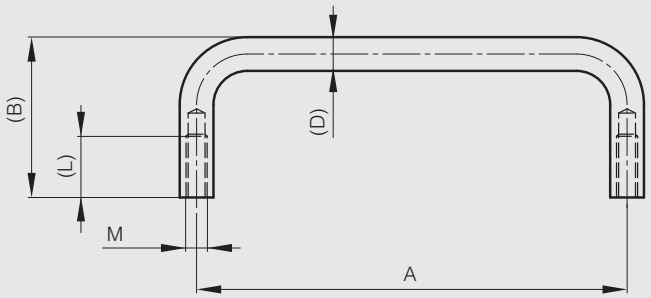

Rear mounted grab handles 95 to 150 mm

For use with M4 screws.

Part number	Material	Finish	A	B	D	L	M	Weight (g)
19-7-3701	304 stainless steel	raw	95	28	9	8	4	76
19-7-3700	304 stainless steel	raw	120	28	9	8	4	88
19-7-3699	304 stainless steel	raw	150	28	9	8	4	103

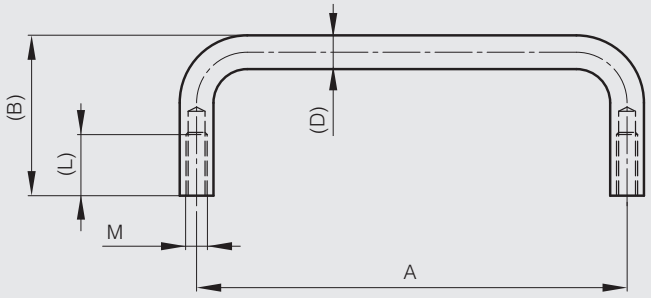

Rear mounted grab handles 102 to 204 mm

Part number	Material	Finish	A	B	D	L	M	Weight (g)
19-1-3569	steel	chrome plated	102	38	8	14	5	70
19-1-3570	steel	chrome plated	153	38	8	14	5	90
19-1-3571	steel	chrome plated	204	38	8	14	5	105

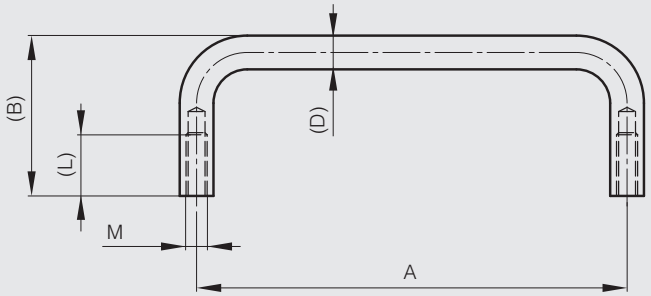

Knurled collar

For use with handles part numbers 19-1-3569, 19-1-3570 and 19-1-3571.

Part number	Material	Finish	A	B	Weight (g)
19-1-3572	brass	chrome plated	16	8	10

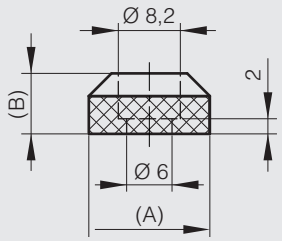

Rear mounted handle 160 mm

Part number	Material	Finish	A	B	Weight (g)
19-1-3390	brass	chrome plated	160	50	114

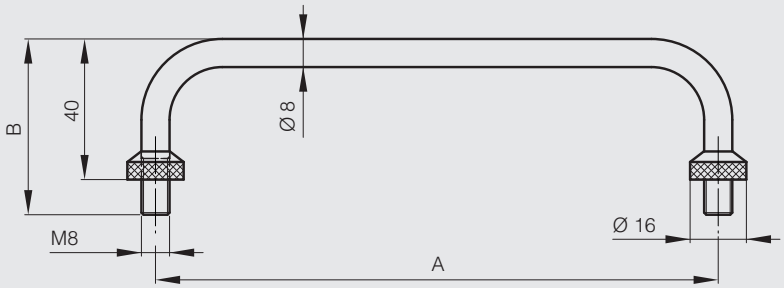

Rear mounted grab handles 92 to 200 mm

Complete with M5 screws.

Part number	Material	Finish	A	B	C	D	L	Weight (g)
19-1-3833	316 stainless steel	mirror polished	92	32	14.8	7.8	10	120
19-7-3696	304 stainless steel	mirror polished	100	40	14	8	11	120
19-1-3834	316 stainless steel	mirror polished	110	32	14.8	7.8	10	120
19-7-3697	304 stainless steel	mirror polished	150	50	14	8	11	174
19-7-3698	304 stainless steel	mirror polished	200	50	14	8	11	210

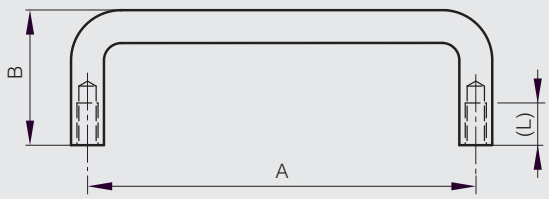

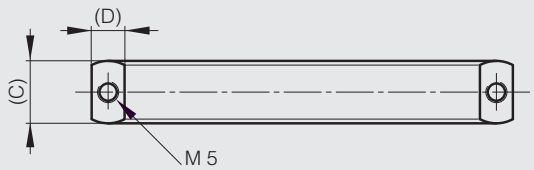

Black aluminium rear mounted grab handles 75 to 150 mm

Part number	Material	Finish	A	B	C	Weight (g)
19-1-9001	aluminium	black painting	75	38	16	34
19-1-9002	aluminium	black painting	100	38	16	45
19-1-9003	aluminium	black painting	150	38	16	68

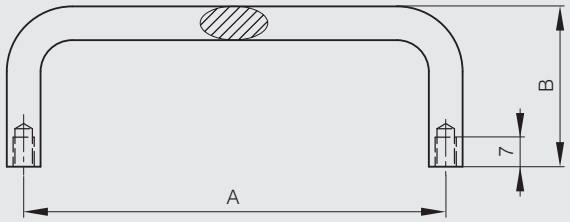

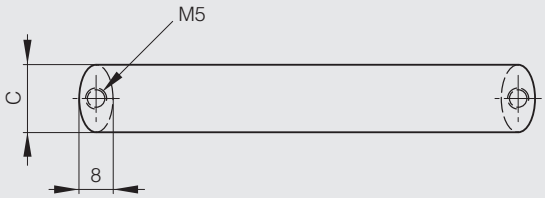

Black aluminium rear mounted grab handles 88 to 120 mm

Part number	Material	Finish	A	B	F	Weight (g)
19-7-3644	aluminium	matt black	88	40	102	50
19-7-3645	aluminium	matt black	120	40	134	60

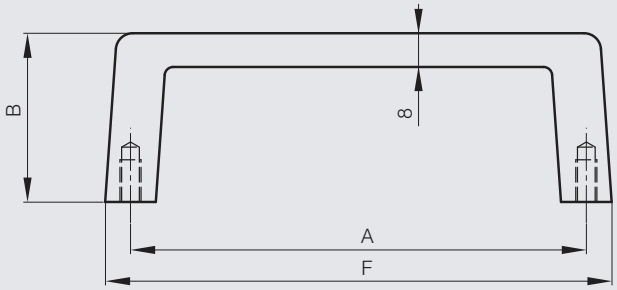

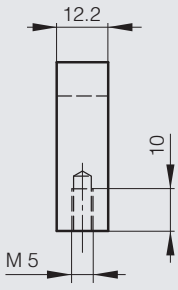

Chrome plated zinc die-cast rear mounted grab handle 90 mm

Part number	Material	Finish	A	B	F	Weight (g)
19-7-3426	zinc die-cast	chrome plated	90	33	99	52.5

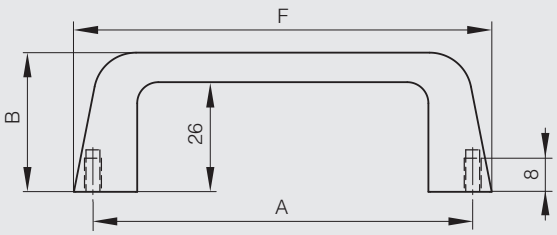

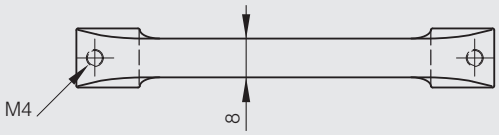

Chrome plated zinc die-cast rear mounted grab handle 111 mm

Part number	Material	Finish	A	B	F	Weight (g)
19-7-3527	zinc die-cast	chrome plated	111	29	145	54.8

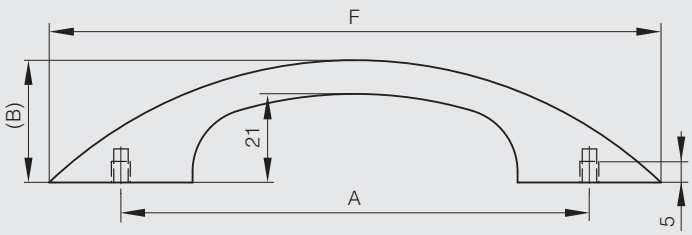

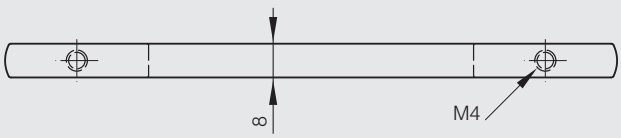

Chrome plated zinc die-cast rear mounted grab handles 160 mm

Part number	Material	Finish	A	B	F	Weight (g)
19-7-3385	zinc die-cast	chrome plated	160	26	174	84
19-7-3387	zinc die-cast	matt black	160	26	174	84

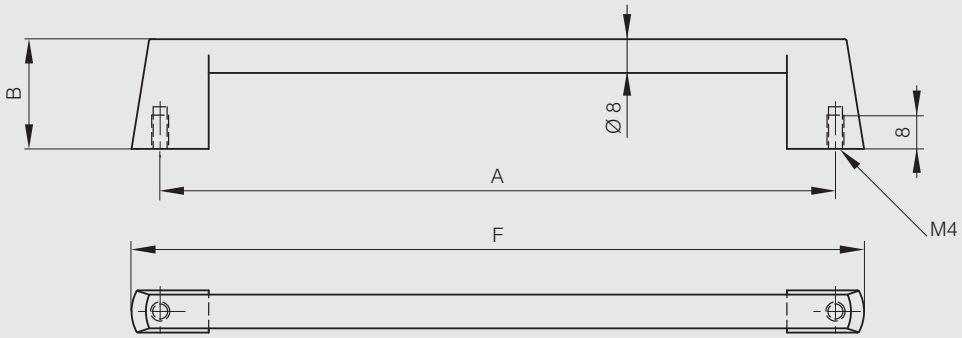

Moulded grab handle - rear mounted

Part number	Material	Finish	A	B	C	F	Weight (g)
19-1-9000	plastic	black	132	55	25	160	86

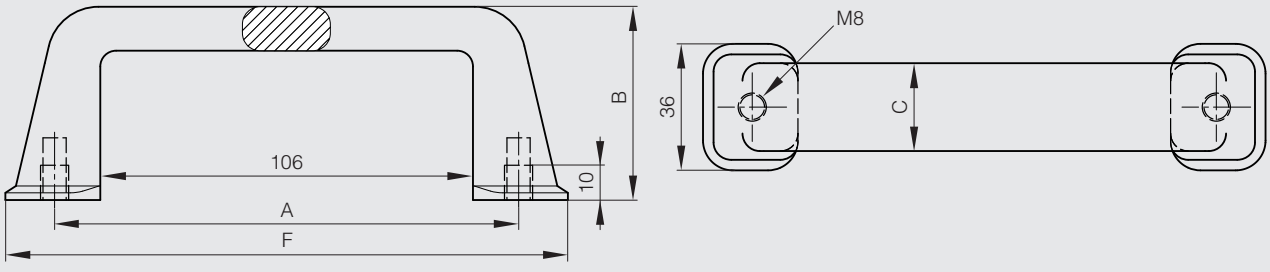

Drop handles 96 x 61 mm - load 25 kg

Maximum load : 25kg
With 80° stop.

Part number	Material	Finish	A	B	C	Note	Weight (g)
19-7-3339	steel	raw	96	61	37	undrilled	77
19-7-3637	steel	zinc plated	96	61	37	drilled	77

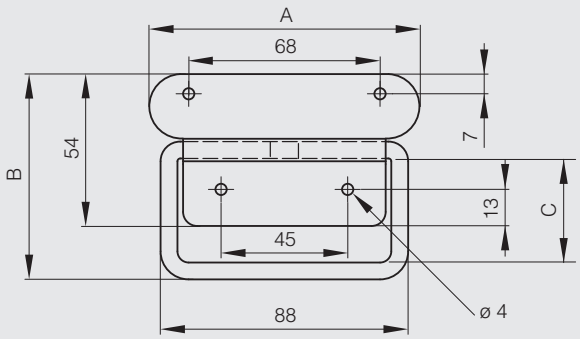

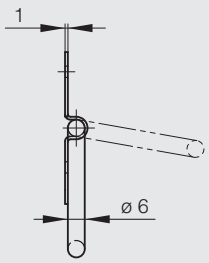

Drop handles 96 x 71 mm - load 25 kg

Maximum load : 25kg
With 80° stop.

Part number	Material	Finish	A	B	C	Note	Weight (g)
19-7-3340	steel	raw	96	71	51	undrilled	107
19-7-3633	steel	zinc plated	96	71	51	drilled	107

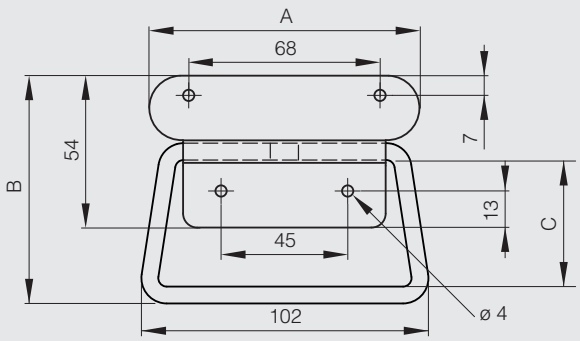

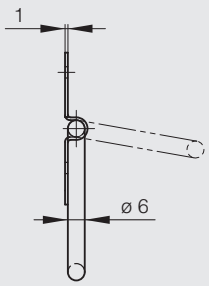

Drop handle 104.8 x 73.7 mm - load 90 kg

Maximum load : 90kg.
With 90° stop.

Part number	Material	Finish	A	B	C	Weight (g)
19-7-3721	steel	zinc plated	104.8	73.7	34.9	181

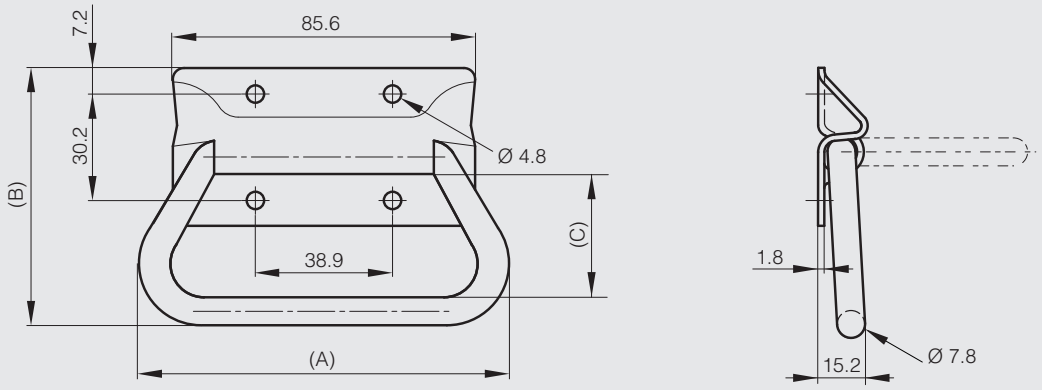

Drop handles 140 x 87 mm - load 60 kg

Maximum load : 60kg
With 80° stop.

Part number	Material	Finish	A	B	C	Note	Weight (g)
19-7-3341	steel	raw	140	87	38	undrilled	180
19-7-3638	steel	zinc plated	140	87	38	drilled	180

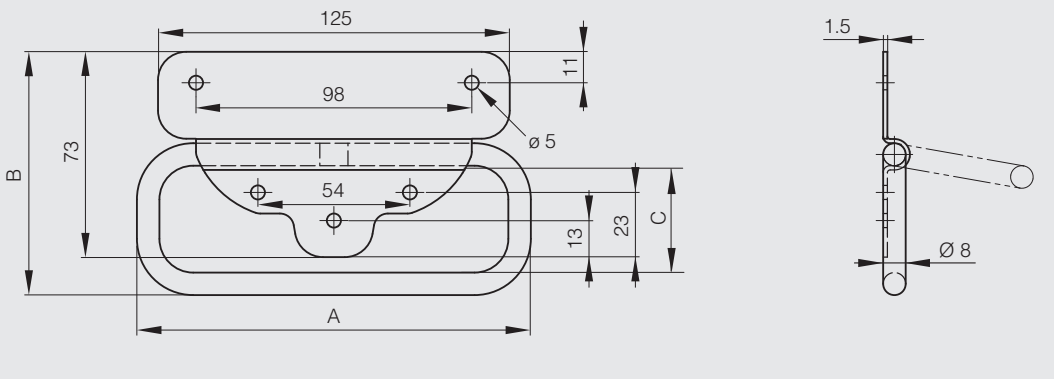

Drop handle 141 x 85 mm - load 60 kg

Maximum load : 60kg
With 80° stop.
Also available with fixing plate (part numbers 19-7-3331 and 19-7-3626).

Part number	Material	Finish	A	B	C	Weight (g)
19-7-3648	steel	zinc plated	141	85	62	205.5

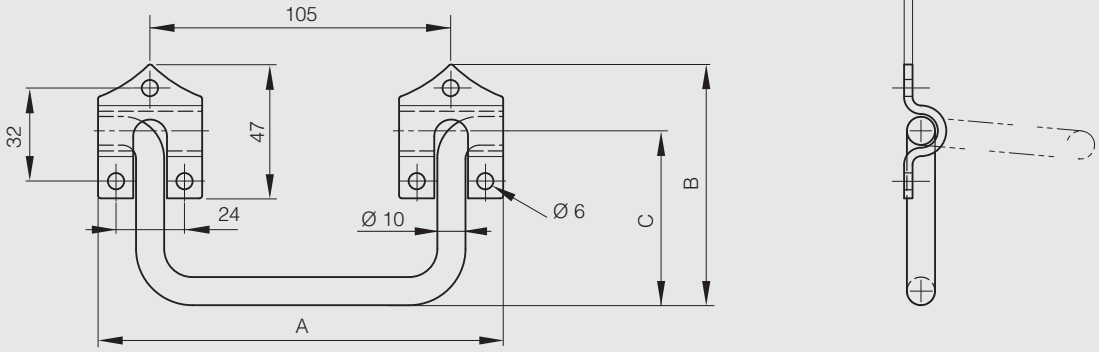

Drop handles 141 x 85 mm with fixing plate - load 60 kg

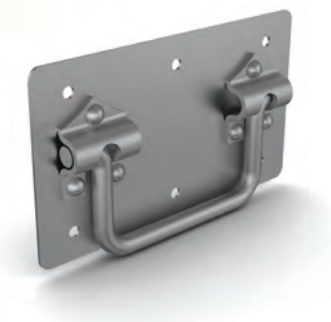

Maximum load : 60kg
With 80° stop.

Part number	Material	Finish	A	B	C	Weight (g)
19-7-3331	steel	raw	141	85	62	502
19-7-3626	steel	zinc plated	141	85	62	502

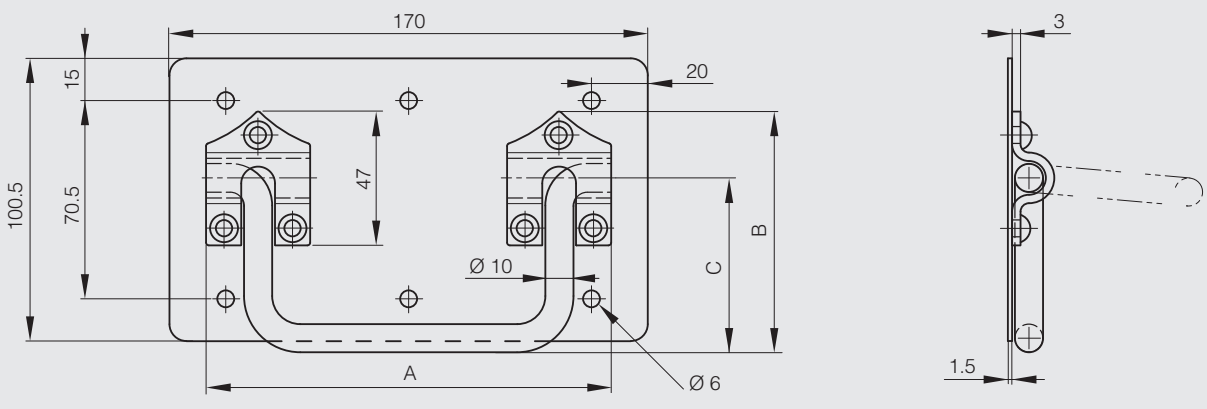

Drop handles - load 35 kg or 45 kg

With 90° stop.

Part number	Material	Finish	A	B	C	D	E	S	Note	Weight (g)
19-7-3333	steel	raw	142	44.5	120	74	7	5.2	load : 35 kg	115
19-7-3334	steel	raw	160	49.6	138	93.5	8	5.2	load : 45 kg	142
19-7-3335	steel	raw	187	49.6	162	109	8	5.2	load : 45 kg	155
19-7-3515	steel	zinc plated	142	45	120	75	8	5.2	load : 35 kg	115
19-7-3535	steel	zinc plated	160	46	138	94	8	5.2	load : 45 kg	142
19-7-3649	steel	zinc plated	187	49.6	162	109	8	5.2	load : 45 kg	155

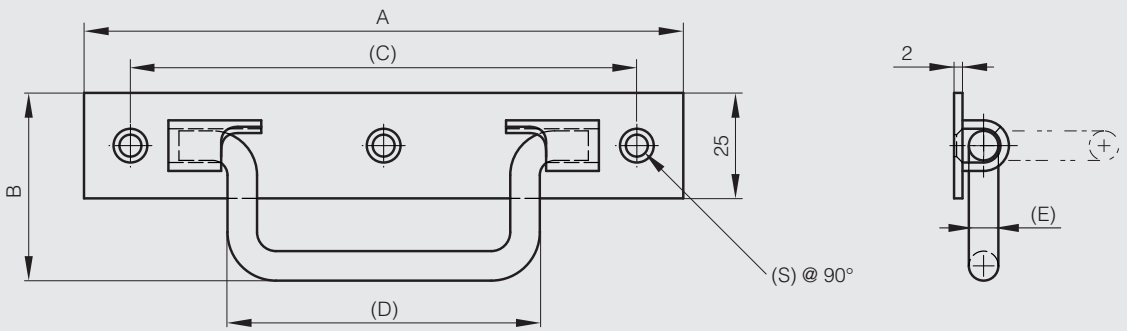

Drop handle with chamfremed angles - load 35 kg

With 90° stop.

Part number	Material	Finish	A	B	C	D	E	S	Note	Weight (g)
19-7-3690	304 stainless steel	raw	158	54	130	89	7	5.2	load : 35 kg / chamfremed angles	120

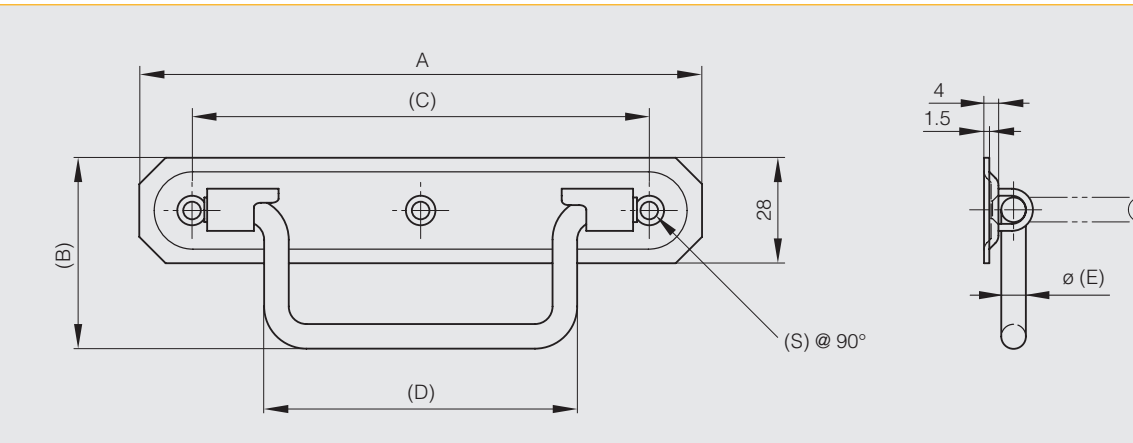

Drop handle 130 x 80 mm - load 68 kg

Maximum load : 68kg.
With 180° stop.
Rubber grip in neoprene.

Part number	Material	Finish	A	B	C	Weight (g)
19-7-3706	steel	zinc plated	130	80	38.1	227

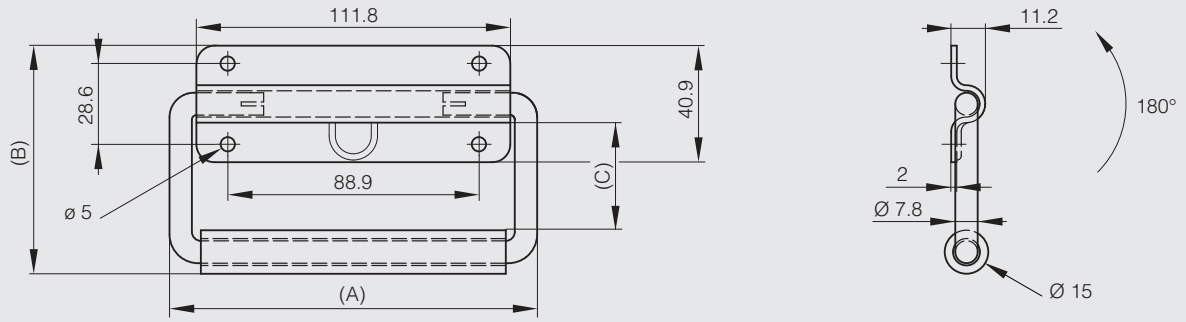

Folding handle with stop in open position

With 90° stop and position control

Part number	Material	Finish	A	B	Weight (g)
19-1-9004	steel	chrome plated	100	41.5	120
19-1-9005	steel	chrome plated	135	41.5	150

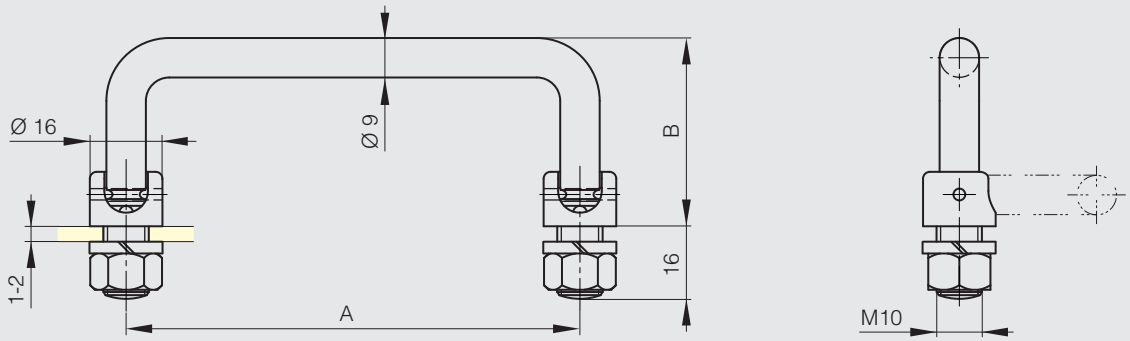

Black steel folding handle

Part number	Material	Finish	A	B	Weight (g)
19-1-9006	steel	black epoxy	101.5	37.5	54

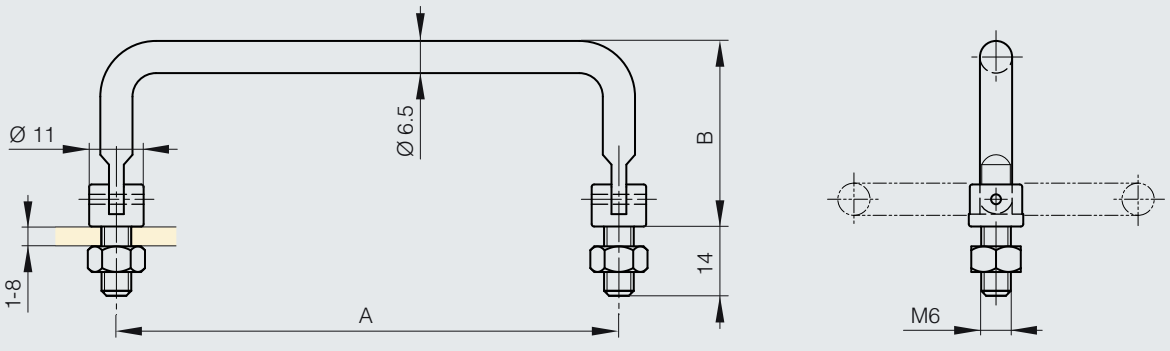

Spring loaded handle 110 mm - load 25 kg

Maximum load : 25 kg.
With 70° stop.

Part number	Material	Finish	A	B	C	Weight (g)
19-7-3641	steel	zinc plated	110	87	50.5	210

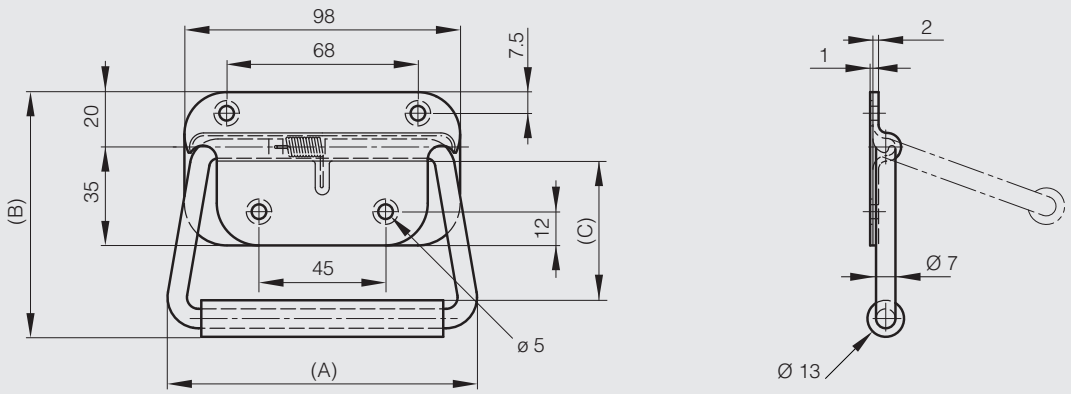

Spring loaded handles 130 mm - load 34 kg - 180° opening

Maximum load : 34 kg.
With 180° stop.
Rubber grip in EPDM.

Part number	Material	Finish	A	B	C	Weight (g)
19-7-3710	steel	black epoxy	130	75.4	46	227
19-7-3711	stainless steel	passivated	130	75.4	46	227

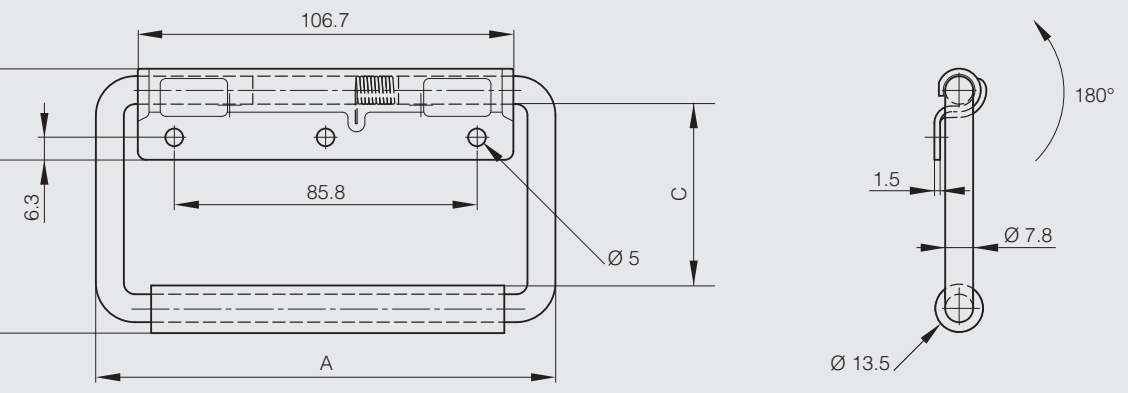

Spring loaded handles 130 mm - load 45 kg

Maximum load : 45 kg
With 90° stop.
Rubber grip.

Part number	Material	Finish	A	B	C	D	Weight (g)
19-7-3733	steel	zinc plated	130	81.3	48.3	15	226

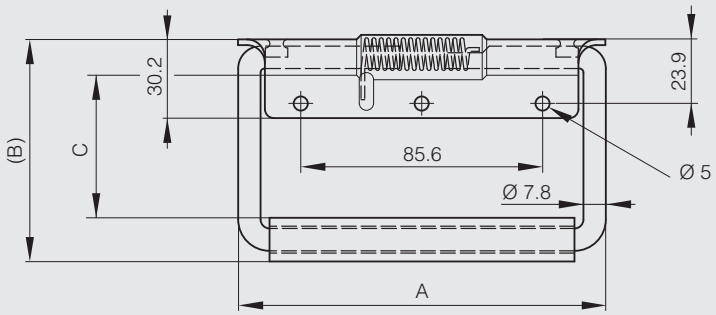

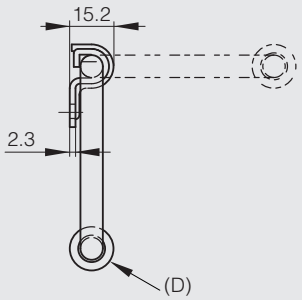

Spring loaded handles 130.3 mm - load 45 kg

Maximum load: 45 kg
With 90° stop.
Rubber grip.

Part number	Material	Finish	A	B	C	E	Weight (g)
19-7-3745	steel	zinc plated	130.3	82.6	38.1	39.6	272
19-7-3740	steel	zinc plated	130.3	104.1	60.4	39.6	272
19-7-3746	stainless steel	raw	130.3	82.6	38.1	41.9	272
19-7-3741	stainless steel	raw	130.3	104.1	60.4	41.9	272

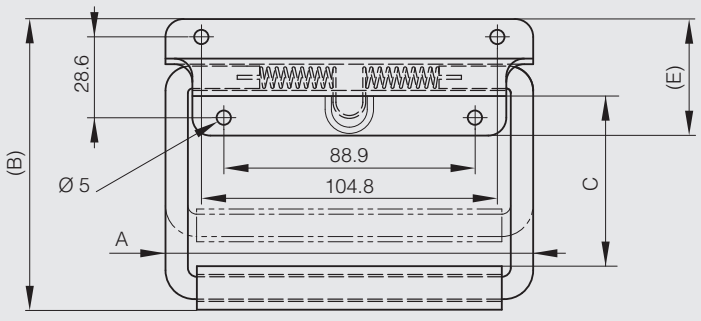

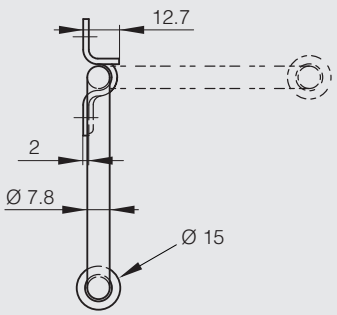

Spring loaded handle 130 mm - load 54 kg

Maximum load : 54 kg.
With 90° stop.
A special aluminium sleeve located between the rubber grip and the bail assures the grip will not ride up on the bail during lifting. Adds comfort and durability.
Fungus resistant neoprene.
Meets military specifications MIL.T.945, MIL.C.4150.

Part number	Material	Finish	A	B	C	Weight (g)
19-7-3725	stainless steel	raw	130	112.7	50.8	317

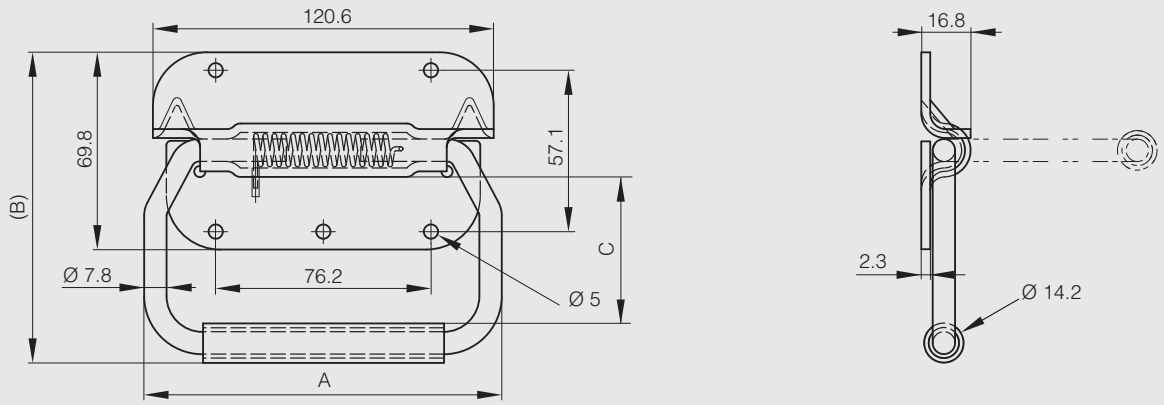

Spring loaded handles 130 mm - load 68 kg

Maximum load : 68 kg.
With 90° stop.
A special aluminium sleeve located between the rubber grip and the bail assures the grip will not ride up on the bail during lifting. Adds comfort and durability.
Fungus resistant neoprene.
Meets military specifications MIL.T.945, MIL.C.4150.

Part number	Material	Finish	A	B	C	D	E	Weight (g)
19-7-3729	steel	zinc plated	130	101.6	50.8	14.2	2.3	275
19-7-3730	steel	zinc plated	130	104.1	50.8	19	2.3	285

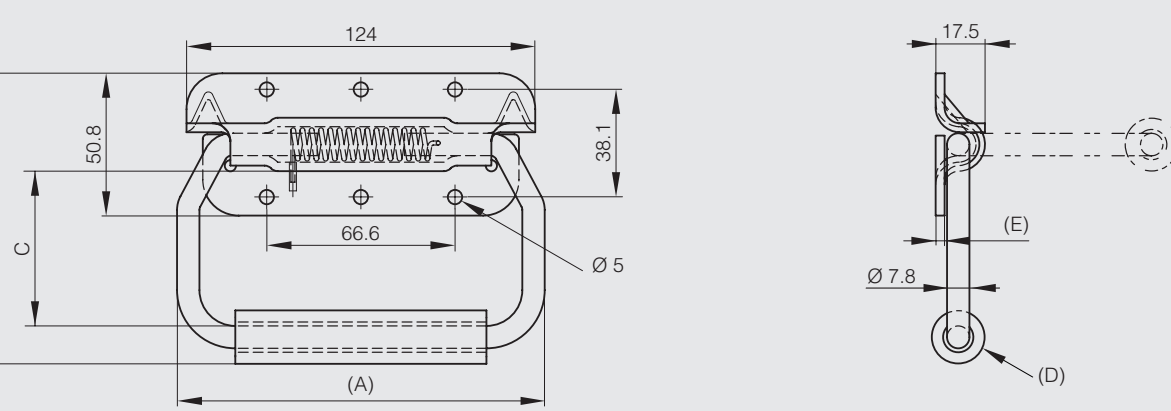

Recessed spring loaded drop handles 155.5 mm - load 57 kg

Maximum load : 57 kg
With 90° stop.
Cut-out dimension : 78.7 x 132.

Part number	Material	Finish	A	B	C	D	Weight (g)
19-7-3751	steel	zinc plated	155.5	101.6	42.9	19	385
19-7-3749	steel	zinc plated	155.5	101.6	46	13.5	385

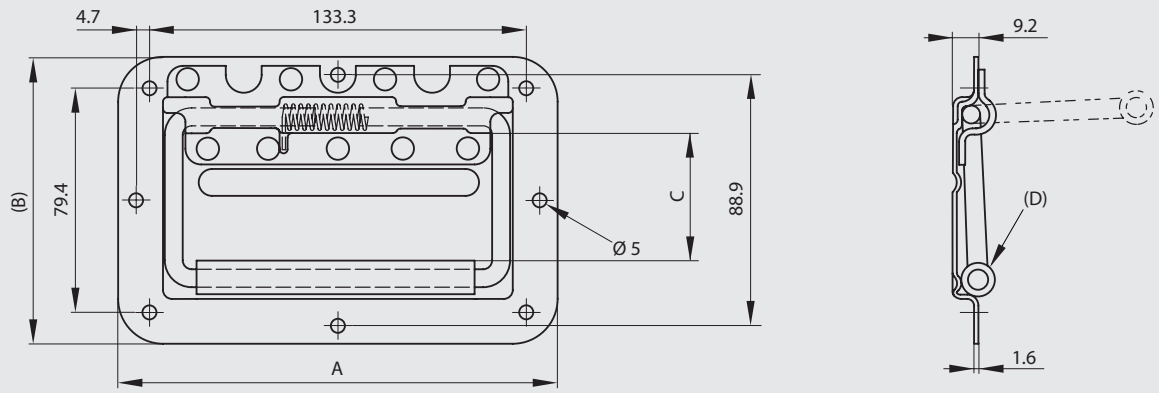

Recessed spring loaded drop handle 177.8 mm - load 68 kg

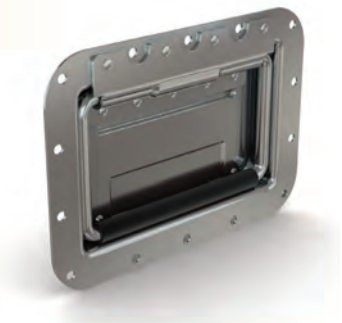

Maximum load : 68 kg
With 90° stop.
Cut-out dimension : 99 x 146.

Part number	Material	Finish	A	B	C	Weight (g)
19-7-3756	steel	zinc plated	177.8	127	62	567

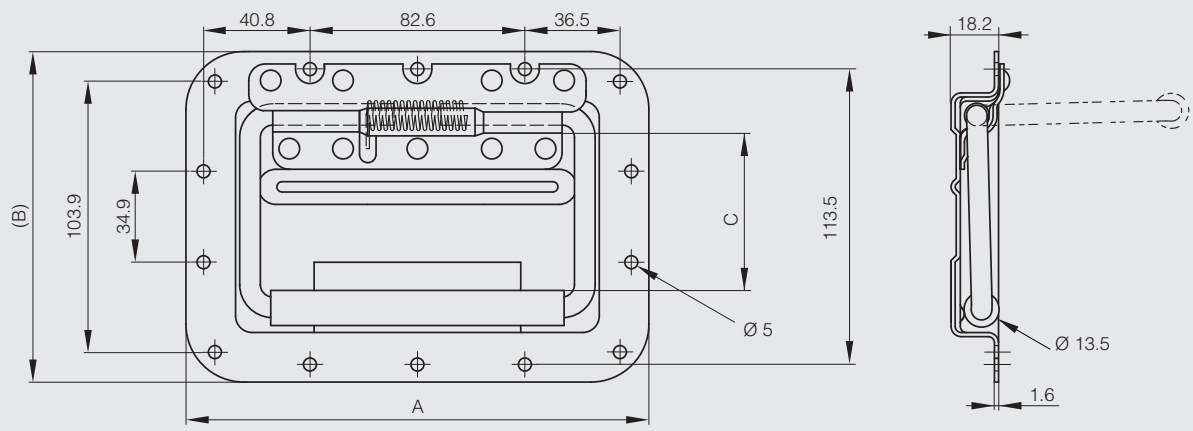

Flush handle 105 x 63.5 mm

This handle has 2 detents at 0° and 90°.
Maximum load : 100 kg.
Handle is chrome plated.
Delivered unassembled.

Part number	Material	Finish	A	B	C	Weight (g)
19-7-3605	aluminium	raw	105	63.5	46	123

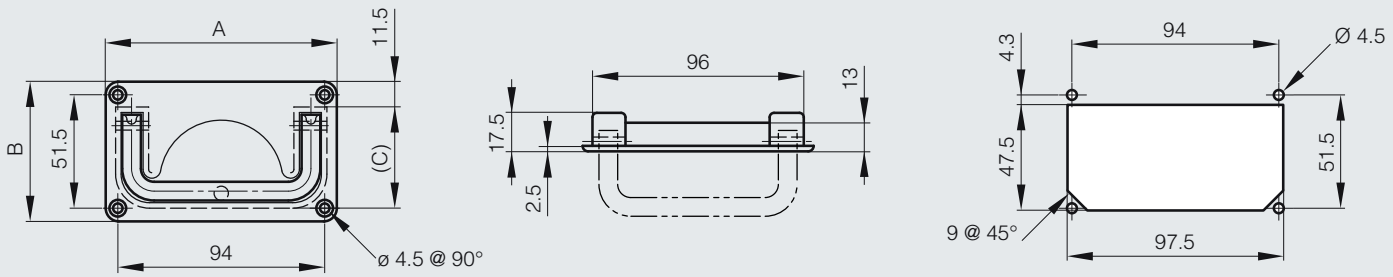

Flush handle 120 x 91 mm

This handle has 2 detents at 0° and 90°.
Maximum load : 100 kg.
Delivered unassembled.

Part number	Material	Finish	A	B	C	Weight (g)
19-7-3338	aluminium	raw	120	91	69.5	145

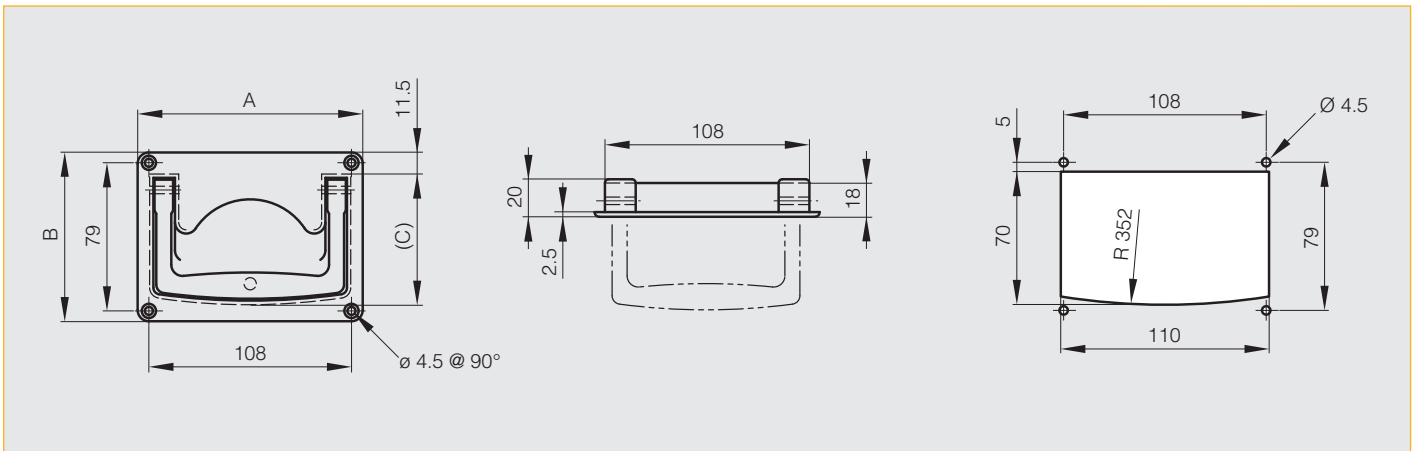

Flush handle 150 x 105 mm

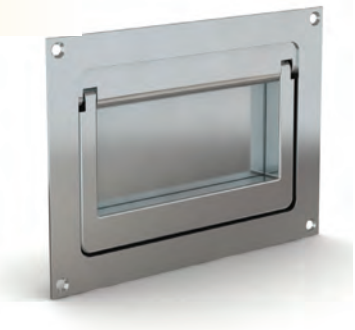

This handle has 2 detents at 0° and 90°.
Maximum load : 100 kg.
Delivered unassembled.
Cut-out dimension : 83 x 127.

Part number	Material	Finish	A	B	Weight (g)
19-7-3606	steel	zinc plated	150	105	450

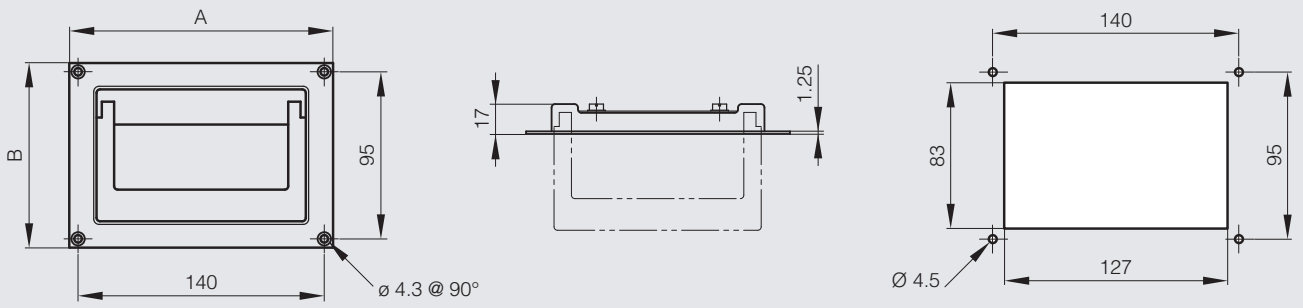

Flush handle 194 x 76 mm

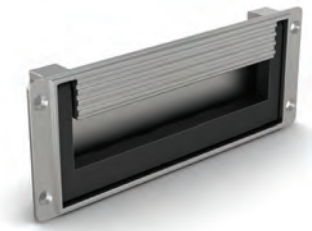

This handle has 2 detents at 0° and 90°.
Maximum load : 100 kg.

Part number	Material	Finish	A	B	C	Weight (g)
19-7-3643	zinc die-cast	silver varnish / black	194	76	20.5	310

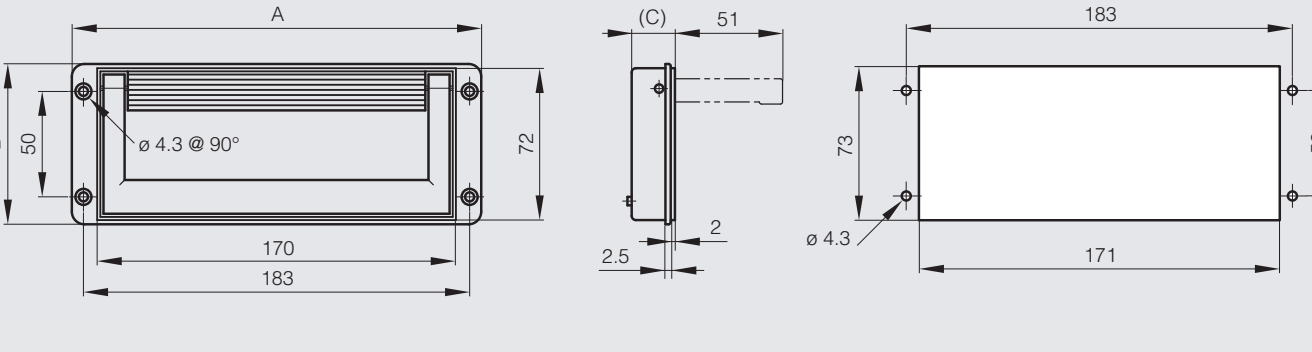

Retractable flush handle in plastic

Maximum load : 10 kg/pair

Part number	Material	Finish	A	B	C	Weight (g)
19-7-3668	plastic	grey	173.5	25	17.5	45

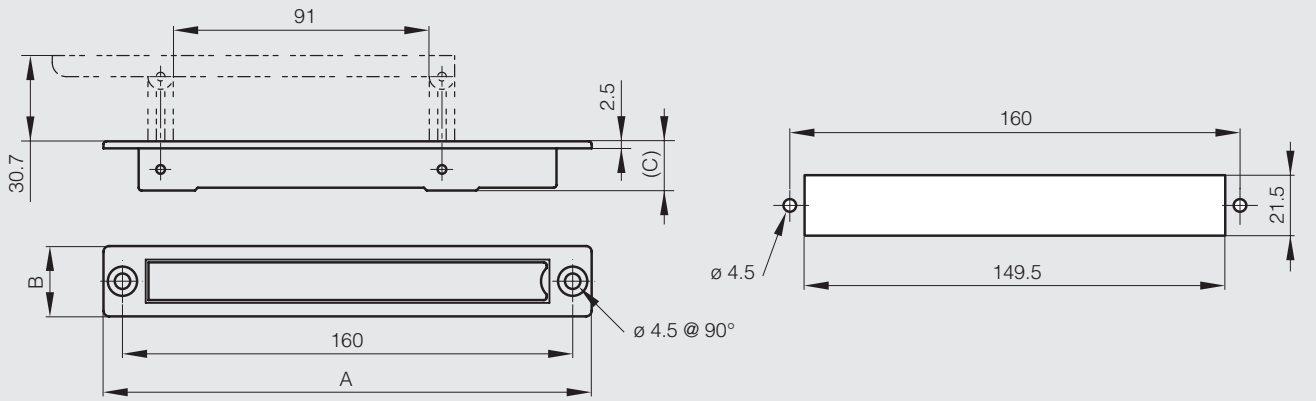

Retractable flush handle in stainless steel

Part number	Material	Finish	A	B	C	D	E	F	Weight (g)
19-7-3814	304 stainless steel	satin	94	42	24	72	18	110	55

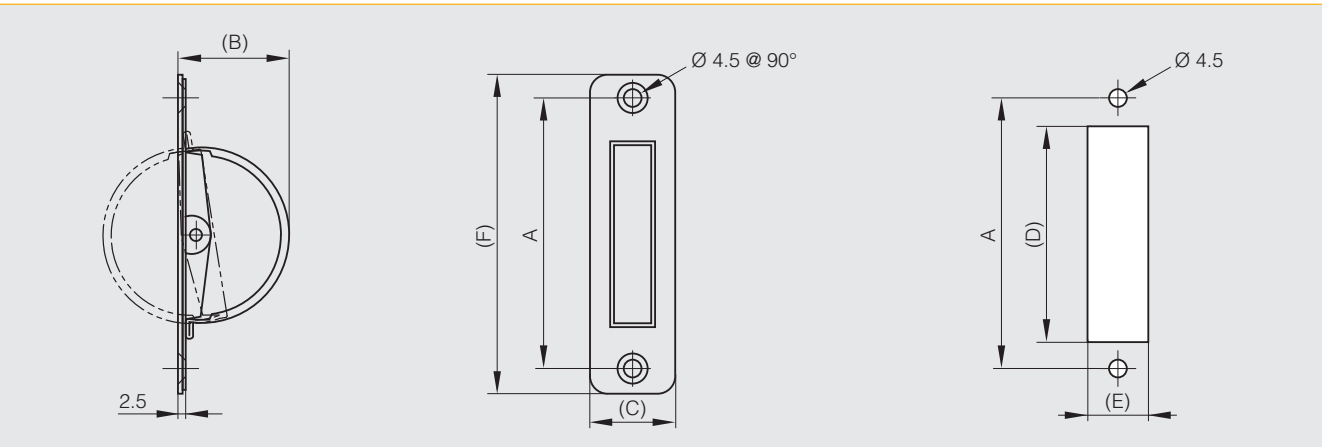

Screw-on flush handle 101 x 52 mm

Part number	Material	Finish	A	B	C	Weight (g)
19-7-3642	ABS	grey	101	52	15	20

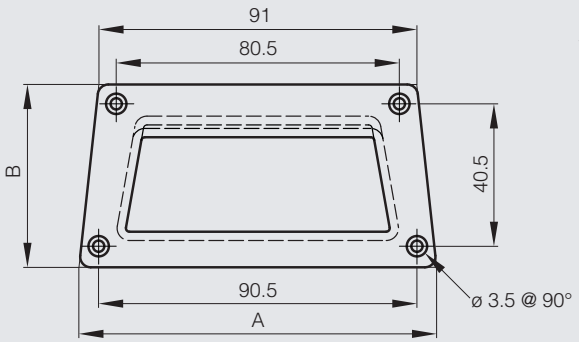

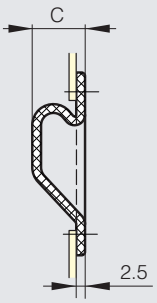

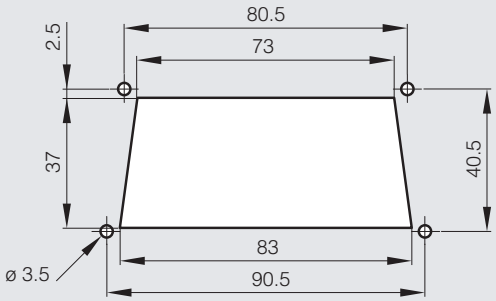

Screw-on flush handle 131 x 79 mm

Part number	Material	Finish	A	B	C	Weight (g)
19-7-3667	ABS	black	131	79	58	45

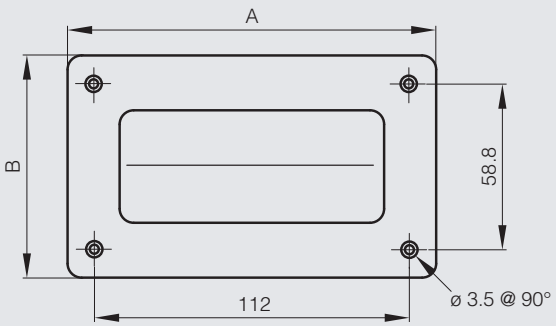

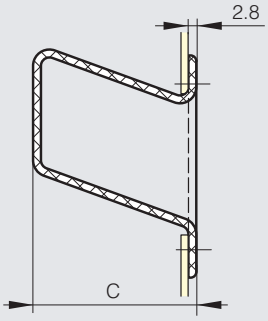

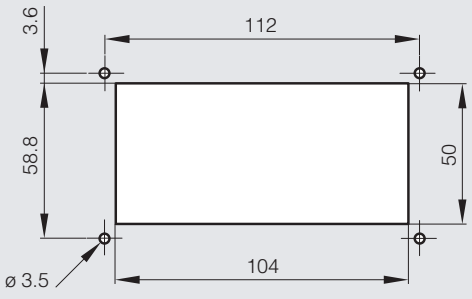

Screw-on recessed grab handle

Part number	Material	Finish	A	B	C	Weight (g)
19-7-3815	polyamide	black	133	60	22	50

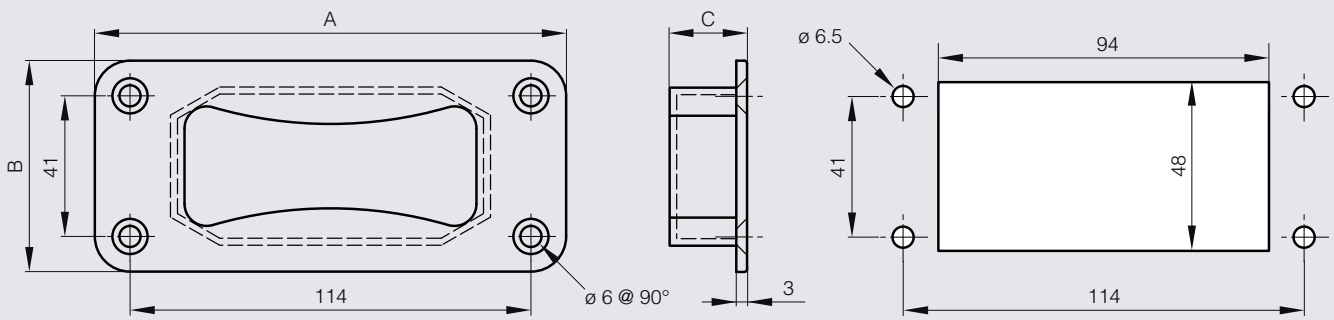

Recessed handle in elastomer

Snap-in

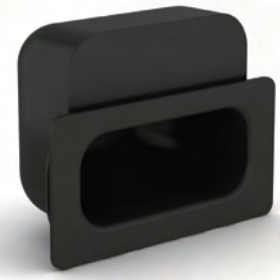

Part number	Material	Finish	A	B	C	Weight (g)
19-7-3838	elastomer	black	120	58	43	95

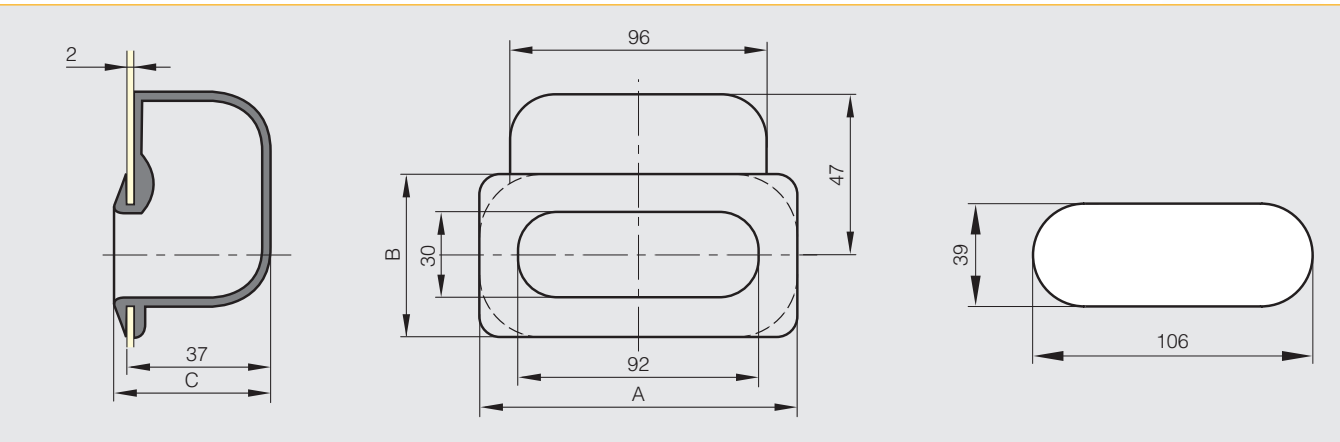

Snap-in flush handle 90 x 40 mm

Door thickness : 0.75 to 1.5 mm.

Part number	Material	Finish	A	B	C	Weight (g)
19-1-3687	ABS	black	90	40	16	11

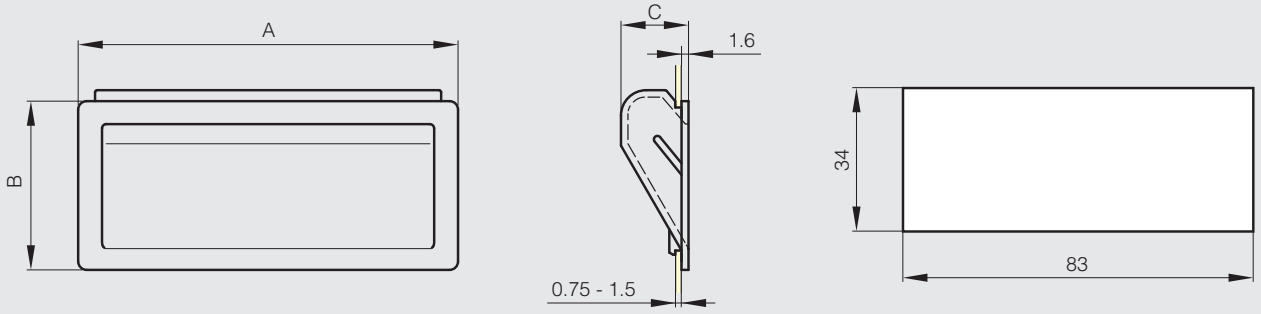

Snap-in flush handles 137.4 x 37.4 mm or 140 x 36 mm

Part number 19-1-3830: cut-out 132 x 30.7 for material thickness from 0.8 to 1.5 mm.
Part number 19-7-3826: cut-out 132 x 30.7 for material thickness from 0.8 to 1.2 mm.
Part number 19-7-3826: cut-out 132 x 31.7 for material thickness from 1.2 to 1.5 mm.

Part number	Material	Finish	A	B	C	E	Weight (g)
19-1-3830	ABS	black	137.4	37.4	18.6	1.6	30
19-7-3826	polyamide	black	140	36	30	2.0	32

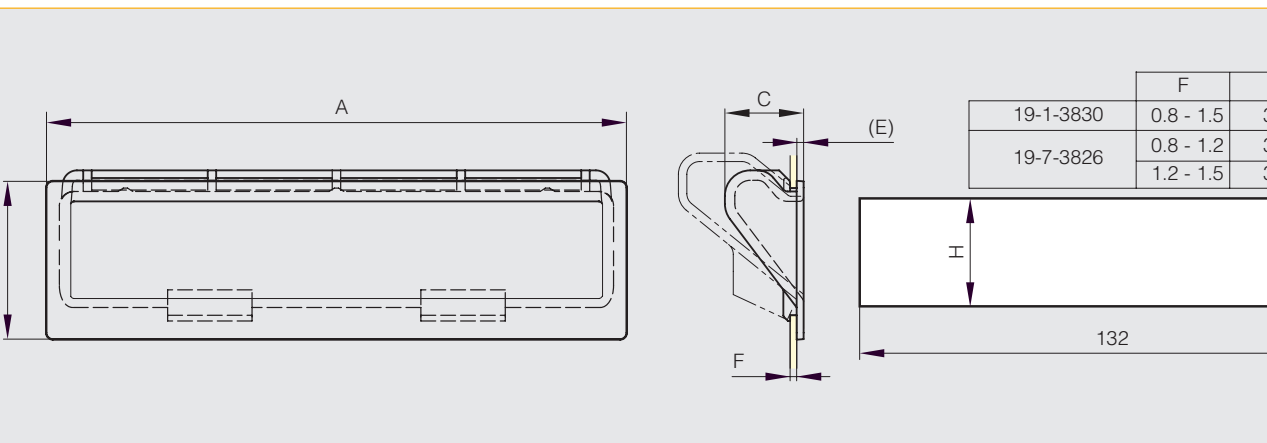

	F	H
19-1-3830	0.8 - 1.5	30.7
19-7-3826	0.8 - 1.2	30.7
	1.2 - 1.5	31.7

Flush handle with fixing clips 110 x 56.3 mm

Door thickness: 0.75 to 1.5 mm.
Supplied with fixing clips.

Part number	Material	Finish	A	B	C	Weight (g)
19-7-3688	ABS	black	110	56.3	18	32

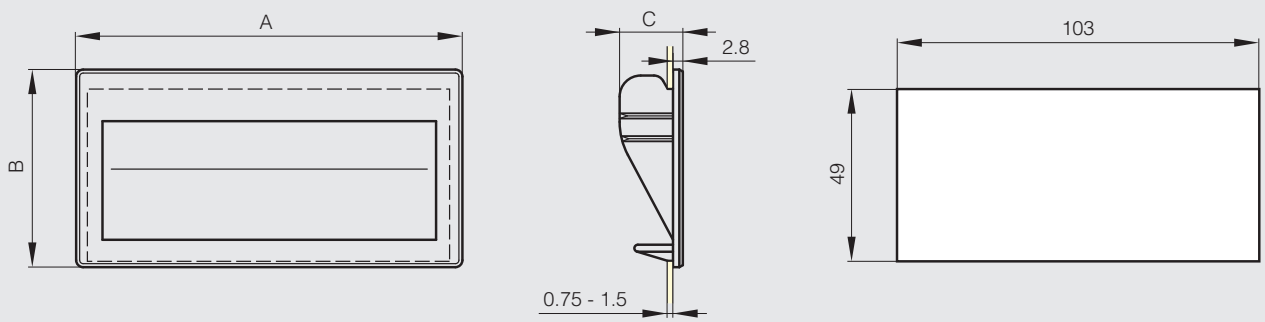

Flush handle with fixing clips 187 x 79 mm

Door thickness: 1.5 to 2 mm.
Supplied with fixing clips.

Part number	Material	Finish	A	B	C	Weight (g)
19-7-3689	ABS	black	187	79	22	85

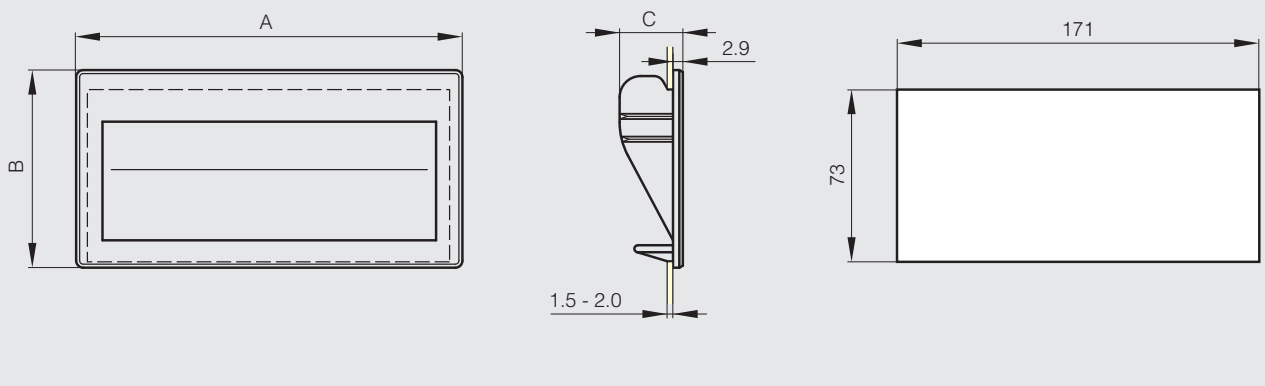

Bolt-on flush handle 120 x 60 mm

Part number	Material	Finish	A	B	C	Weight (g)
19-7-3831	304 stainless steel	satin	120	60	15	54

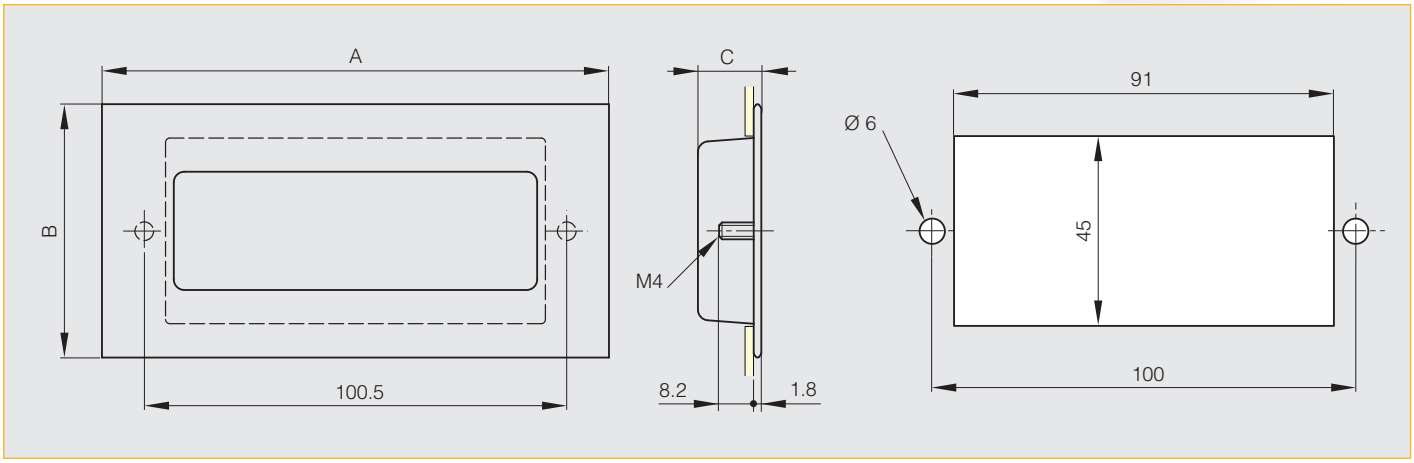

Bolt-on flush handle 120 x 62 mm

Part number	Material	Finish	A	B	C	Weight (g)
19-7-3832	304 stainless steel	satin	120	62	16	60

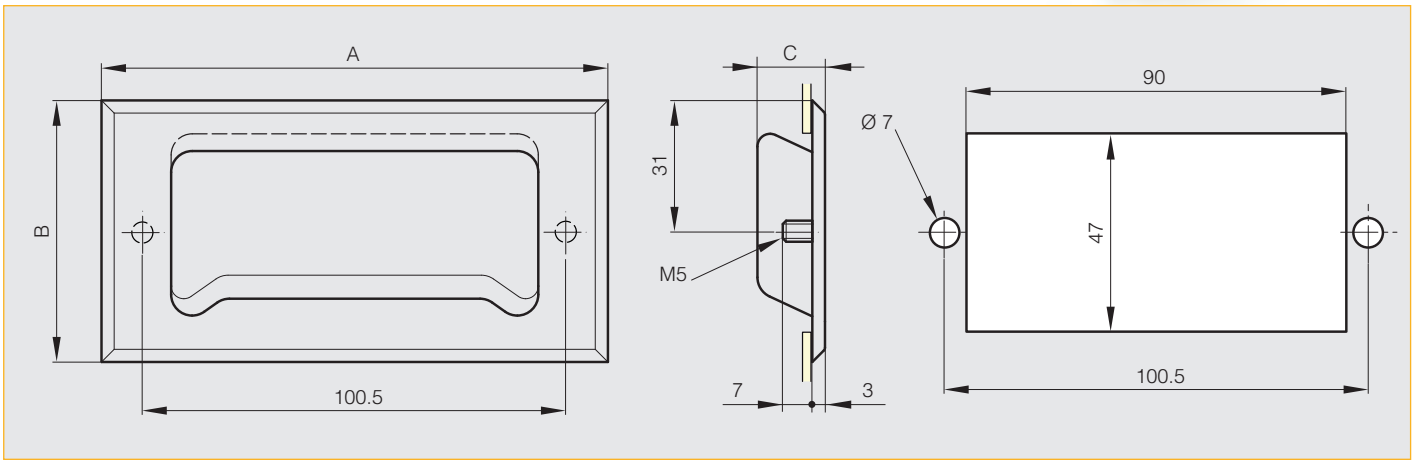

Front mounted grab handle 88 mm

Complete with wood screws.

Part number	Material	Finish	A	B	F	Weight (g)
19-7-3693	304 stainless steel	mirror polished	88	25	100	68.5

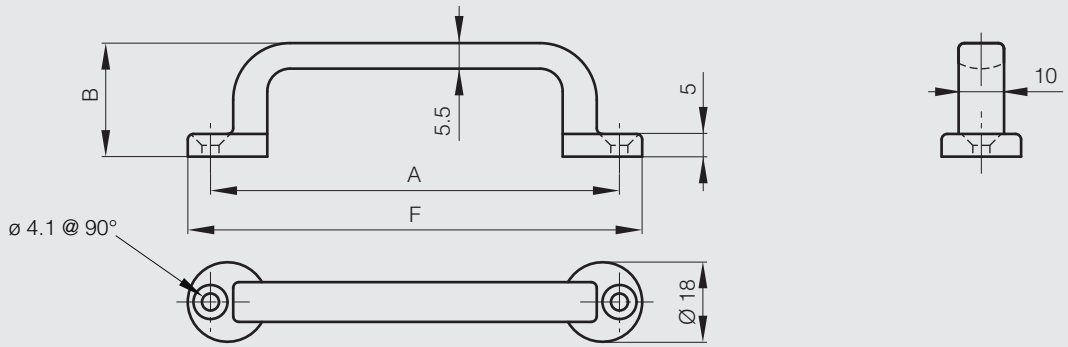

Front mounted grab handles 107 mm in steel or stainless steel

Handle made from galvanised steel is pregalvanised. Therefore any cut surface is ungalvanised.

Part number	Material	Finish	A	B	C	F	Weight (g)
19-1-3797	304 stainless steel	deburred	107	21	15	120	32

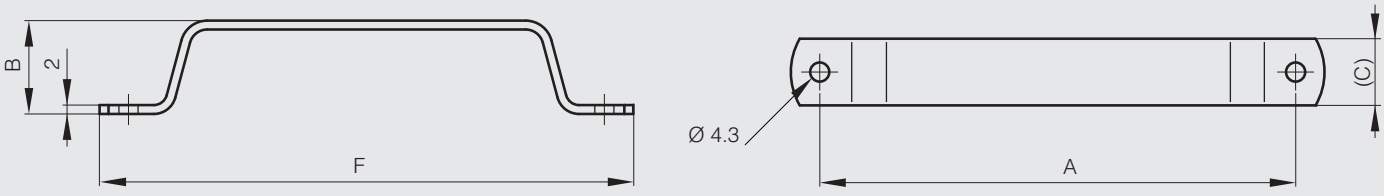

Front mounted grab handles 106 and 126 mm

Complete with wood screws.

Part number	Material	Finish	A	B	C	D	E	F	G	H	S	Weight (g)
19-7-3694	304 stainless steel	mirror polished	106	27	24	7	5	120	24	12	4.1	131
19-7-3695	304 stainless steel	mirror polished	126	33	30	8	6	150	30	15	5.3	242

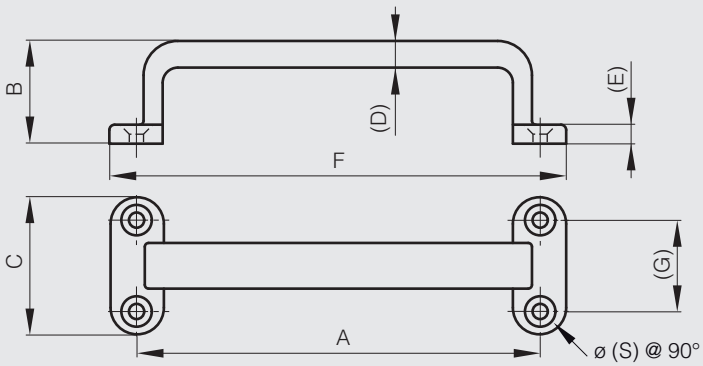

Rear mounted grab handle 110 mm

Part number	Material	Finish	A	B	D	L	M	Weight (g)
19-1-3424	304 stainless steel	polished	110	35	8	11	5	61

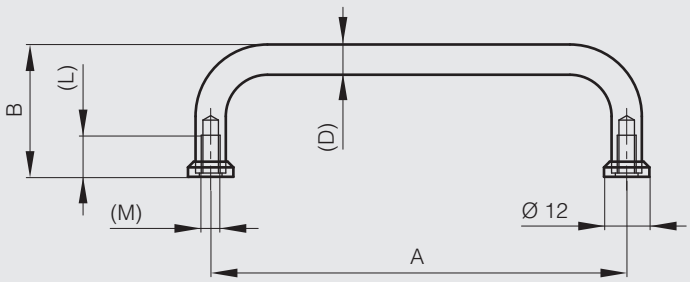

Rear mounted grab handles 95 to 150 mm

For use with M4 screws.

Part number	Material	Finish	A	B	D	L	M	Weight (g)
19-7-3701	304 stainless steel	raw	95	28	9	8	4	76
19-7-3700	304 stainless steel	raw	120	28	9	8	4	88
19-7-3699	304 stainless steel	raw	150	28	9	8	4	103

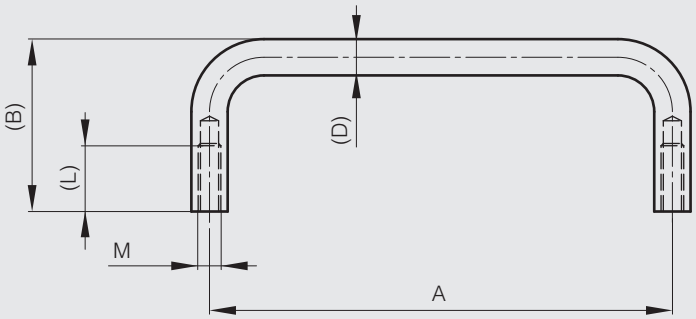

Rear mounted grab handles 92 to 200 mm

Complete with M5 screws.

Part number	Material	Finish	A	B	C	D	L	Weight (g)
19-1-3833	316 stainless steel	mirror polished	92	32	14.8	7.8	10	120
19-7-3696	304 stainless steel	mirror polished	100	40	14	8	11	120
19-1-3834	316 stainless steel	mirror polished	110	32	14.8	7.8	10	120
19-7-3697	304 stainless steel	mirror polished	150	50	14	8	11	174
19-7-3698	304 stainless steel	mirror polished	200	50	14	8	11	210

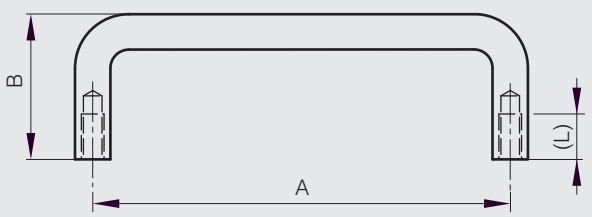

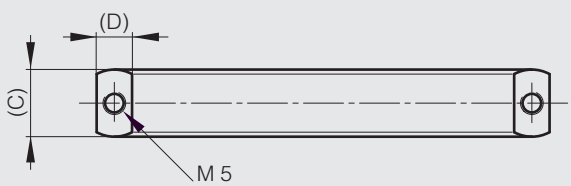

Drop handle with chamfremed angles - load 35 kg

With 90° stop.

Part number	Material	Finish	A	B	C	D	E	S	Note	Weight (g)
19-7-3690	304 stainless steel	raw	158	54	130	89	7	5.2	load : 35 kg / chamfremed angles	120

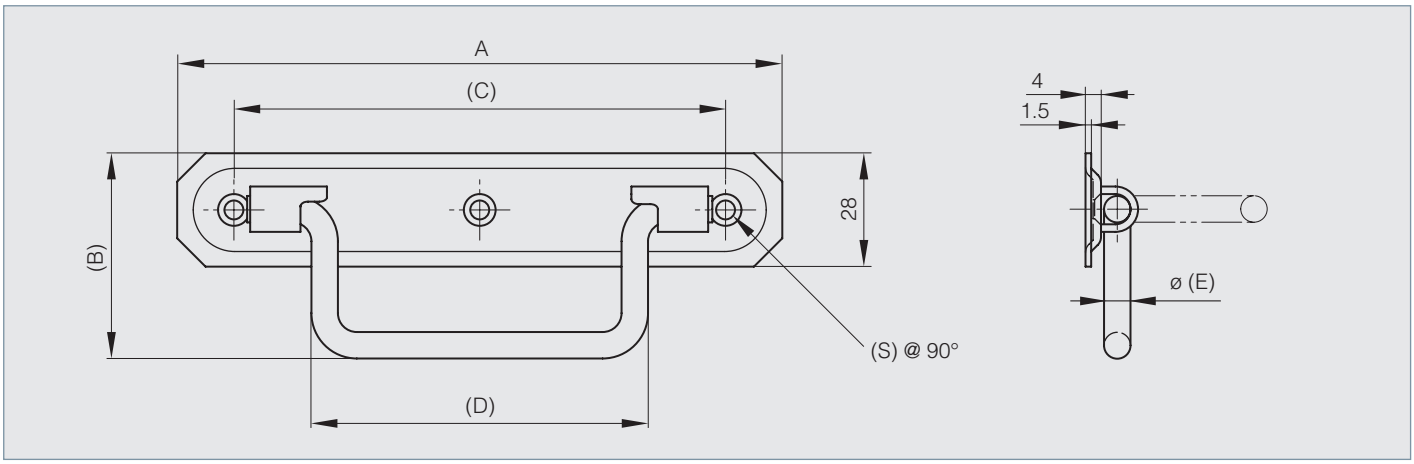

Spring loaded handle 130 mm - load 34 kg - 180° opening

Maximum load : 34 kg.
With 180° stop.
Rubber grip in EPDM.

Part number	Material	Finish	A	B	C	Weight (g)
19-7-3711	stainless steel	passivated	130	75.4	46	227

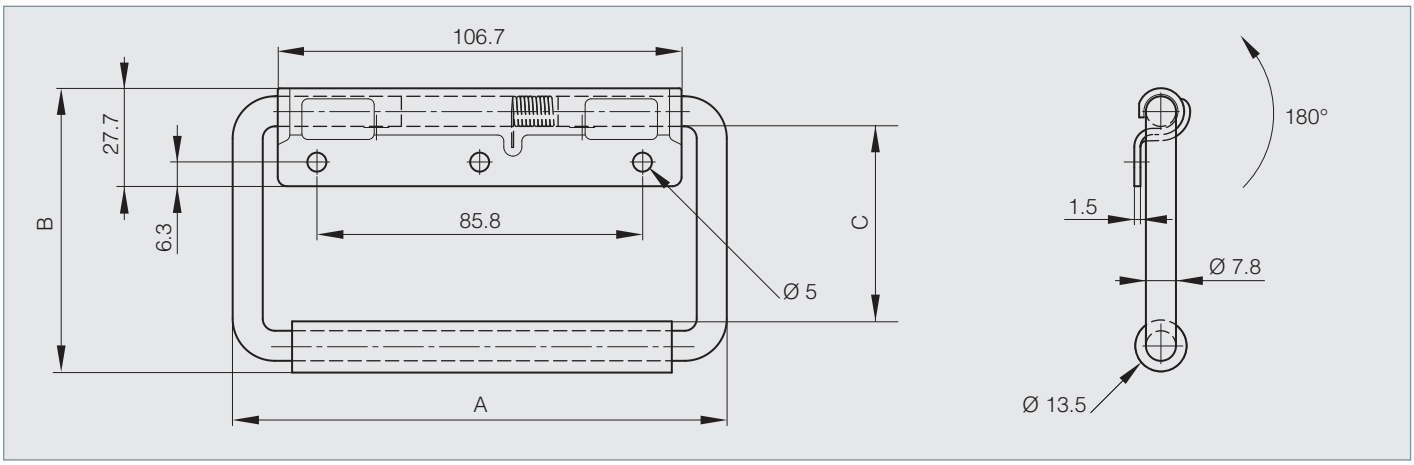

Spring loaded handles 130.3 mm - load 45 kg

Maximum load: 45 kg
With 90° stop.
Rubber grip.

Part number	Material	Finish	A	B	C	E	Weight (g)
19-7-3746	stainless steel	raw	130.3	82.6	38.1	41.9	272
19-7-3741	stainless steel	raw	130.3	104.1	60.4	41.9	272

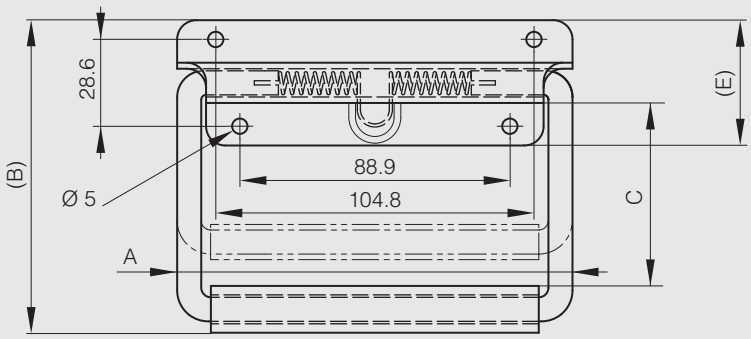

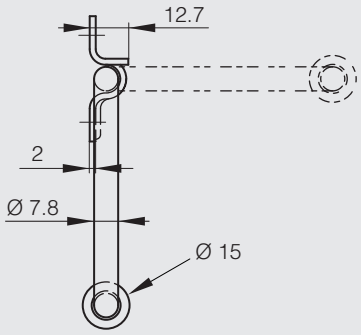

Spring loaded handle 130 mm - load 54 kg

Maximum load : 54 kg.
With 90° stop.
A special aluminium sleeve located between the rubber grip and the bail assures the grip will not ride up on the bail during lifting. Adds comfort and durability.
Fungus resistant neoprene.
Meets military specifications MIL.T.945, MIL.C.4150.

Part number	Material	Finish	A	B	C	Weight (g)
19-7-3725	stainless steel	raw	130	112.7	50.8	317

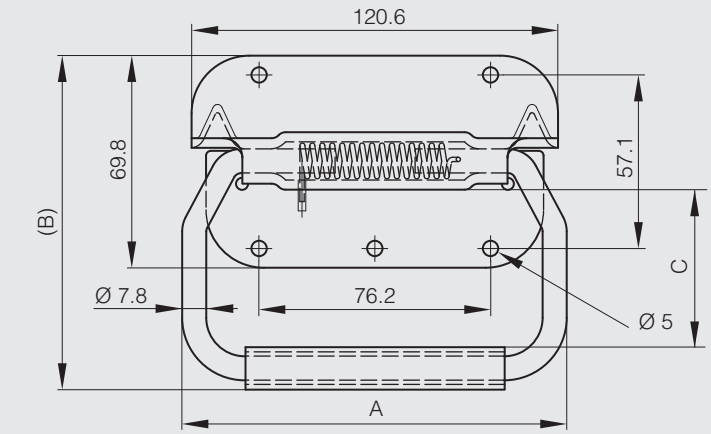

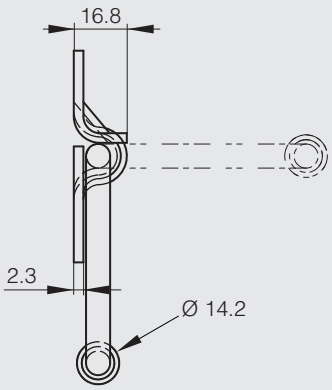

Retractable flush handle in stainless steel

Part number	Material	Finish	A	B	C	D	E	F	Weight (g)
19-7-3814	304 stainless steel	satin	94	42	24	72	18	110	55

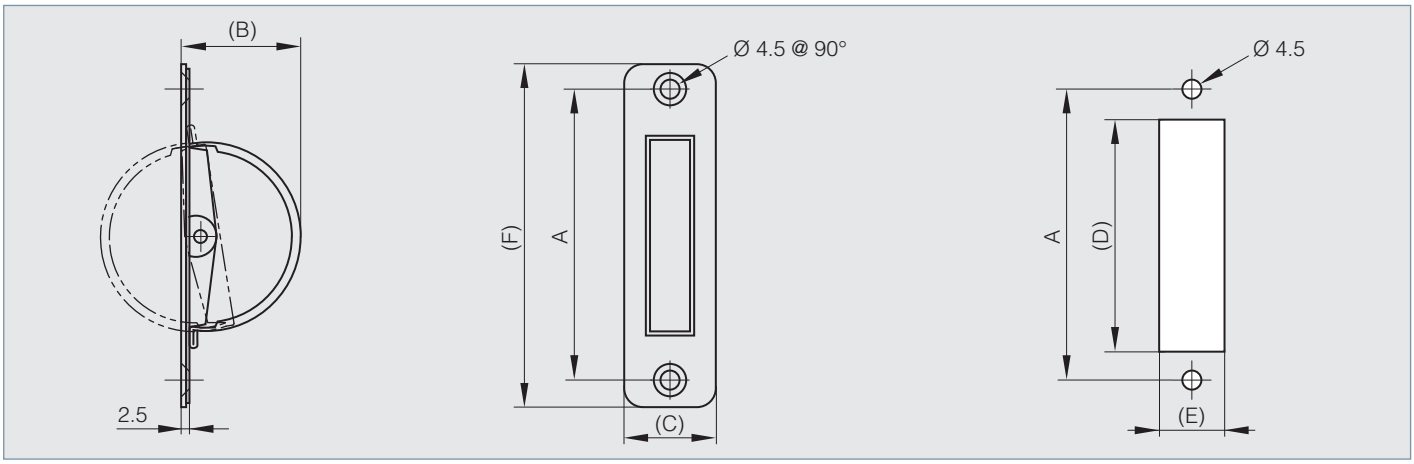

Bolt-on flush handle 120 x 60 mm

Part number	Material	Finish	A	B	C	Weight (g)
19-7-3831	304 stainless steel	satin	120	60	15	54

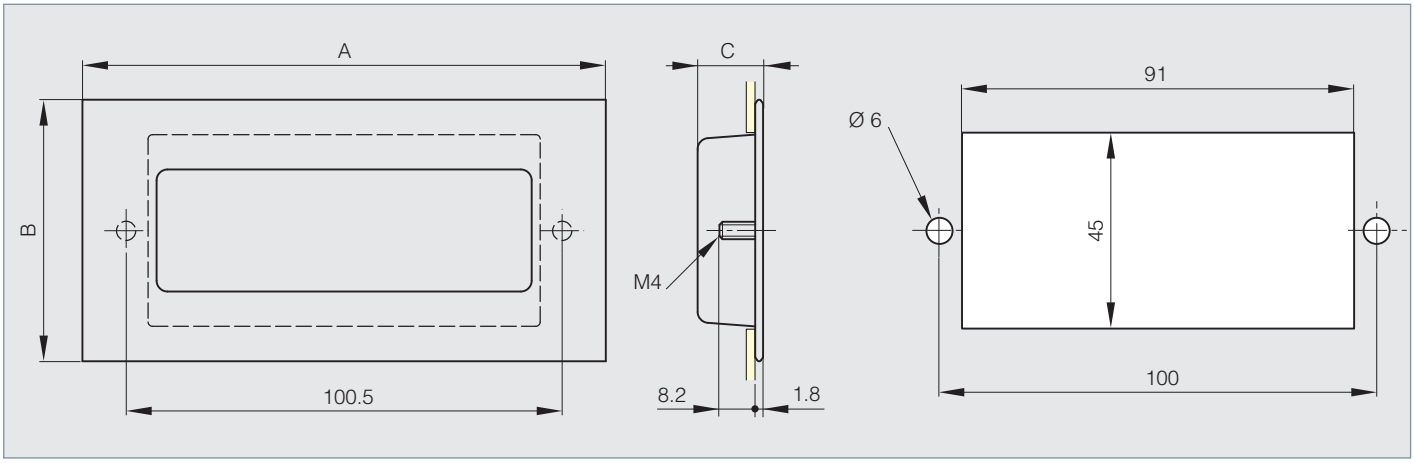

Bolt-on flush handle 120 x 62 mm

Part number	Material	Finish	A	B	C	Weight (g)
19-7-3832	304 stainless steel	satin	120	62	16	60

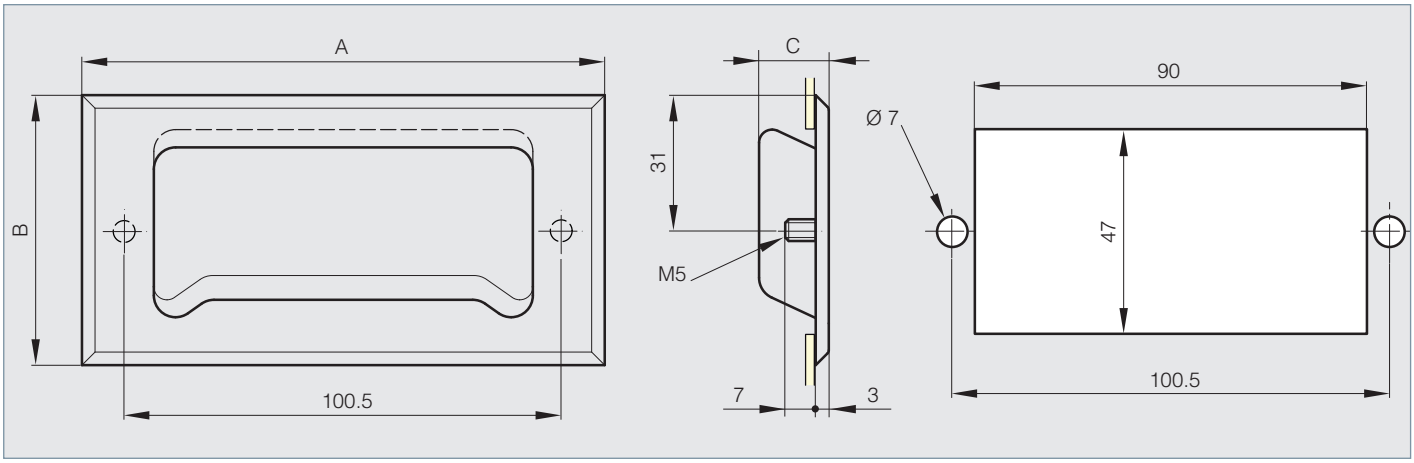

METALIKA Kačin
www.metalika-kacin.com

Pull Handles

from Aluminium resp. Stainless Steel

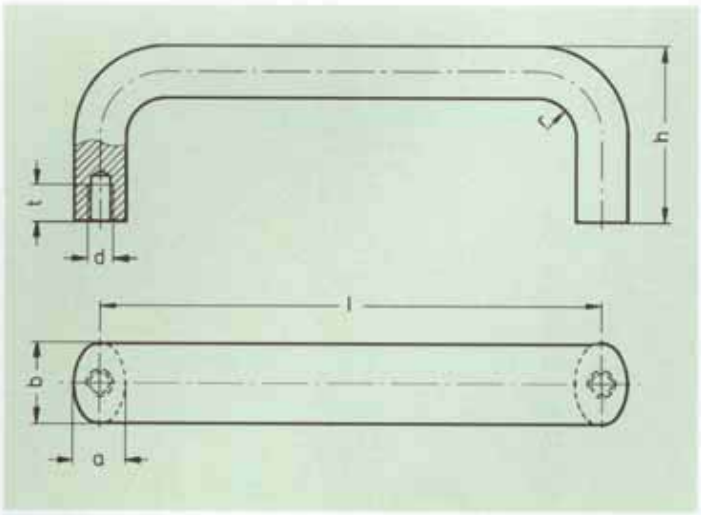

Grip from aluminium profile with high stability and smooth surface. Modern design and ergonomical points of view were the standard basis for the design. Due to the production system (bending), special lengths can be delivered also in small quantities.

Model Aluminium: Plastic coated black RAL 9011, matt finish or blank, bright tumbled finish.
Model Stainless Steel: Material No. 1.4301, sand-blasted matt.

Zimmermann Pull Handles - Aluminium resp. Stainless Steel

Order No. Black	Order No.. Blank	Order No. Stainless Steel	b mm	l mm	a mm	Thread d	h mm	r	t mm
63 20 100 sw	63 20 100 bl		20	100	13	M 6	47	13	10
		63 20 112 E0A	20	112	13	M 6	49	13	10
63 20 128 sw	63 20 128 bl	63 20 128 E0A	20	128	13	M 6	51	13	10
63 26 128 sw	63 26 128 bl		26	128	17	M 8	55	17	12
63 26 160 sw	63 26 160 bl		26	160	17	M 8	57	17	12
63 26 192 sw	63 26 192 bl		26	192	17	M 8	57	17	12
63 26 300 sw	63 26 300 bl		26	300	17	M 8	57	17	12

ZIMMERMANN

Pull Handles

from Plastic

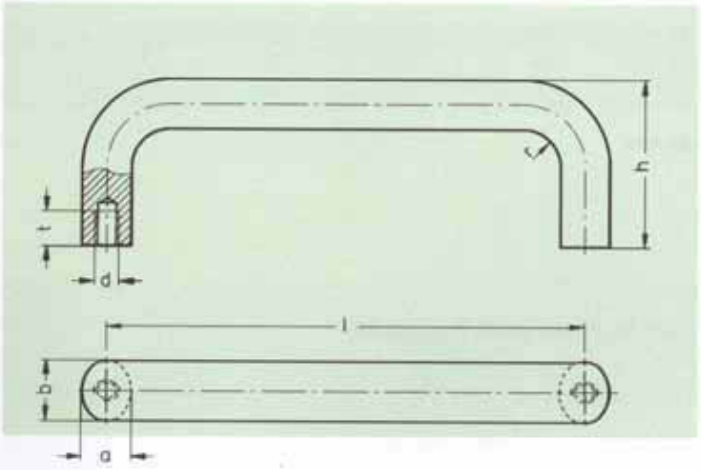

Model: Polyamide black. Thread from brass MS 58.

Zimmermann Pull Handles - Plastic

Order No.	b mm	l mm	a mm	Thread d	h mm	r	t mm
64 12 088 sw	12	88	9	M 5	40	22	7,5
64 12 100 sw	12	100	9	M 5	40	22	7,5
64 12 120 sw	12	120	9	M 5	40	22	7,5

from Aluminium
to assemble from front side

These pull handles allow assembling from front side.

Grip from aluminium profile with high stability and smooth surface. Modern design and ergonomical points of view were the standard basis for the design. Due to the production system (bending), special lengths can be delivered also in small quantities.

Model: Aluminium, Plastic coated black RAL 9011, matt finish or blank, bright tumbled finish.

METALIKA KAČIN
www.metalika-kacin.com

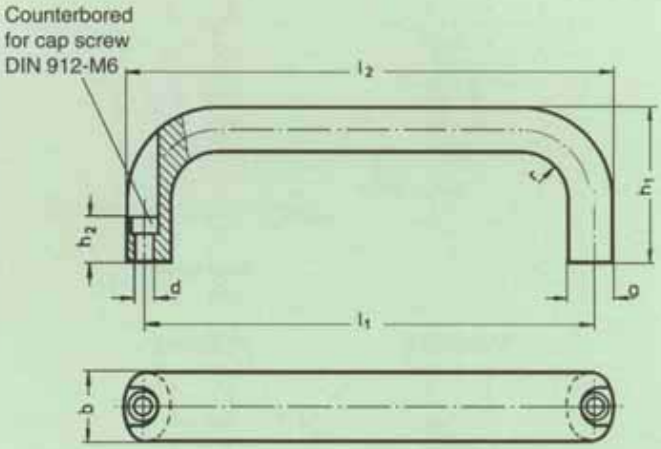

Zimmermann Pull Handles to assemble from front side - Aluminium

Order No. Black	Order No. Blank	b mm	l_1 mm	l_2 mm	a mm	d mm	h_1 mm	h_2 mm	r
66 26 116 sw	66 26 116 bl	26	116	130	17	6,3	53	17	17
66 26 132 sw	66 26 132 bl	26	132	146	17	6,3	55	17	17
66 26 164 sw	66 26 164 bl	26	164	178	17	6,3	57	17	17
66 26 196 sw	66 26 196 bl	26	196	210	17	6,3	57	17	17

Offset Crank Handles

DIN 468

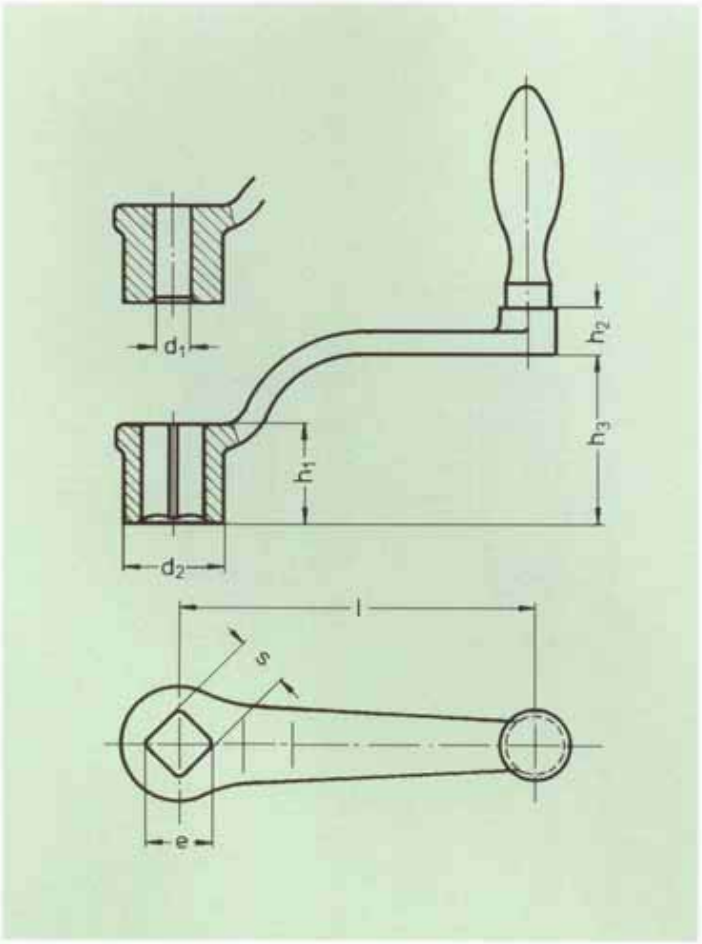

Crank Handles DIN 468 are available as standard with steel grips. Grip from plastic (only Type B) can be supplied on request.

Model:
Crank body cast iron (GGG):
Hub machined, cast edge deburred and sand-blasted.

Type A: with fixed grip.
Type B: with revolving grip.

Plastic crank handles are available on request.

Zimmermann Offset Crank Handles DIN 468

Order No. Type A with Square Hole S H_{11}	Order No. Type A with Fitting Hole d_1 H_7	Order No. Type B with Square Hole S H_{11}	Order No. Type B with Fitting Hole d_1 H_7	Square Hole SH_{11}	e mm	Fitting Hole d_1 H_7	l mm	d_2 mm	h_1 mm	h_2 mm	h_3 = mm	∅ Ball Grip
65 080 10 VKT A	65 080 08 PBG A	65 080 10 VKT B	65 080 08 PBG B	V 10	13,1	8	80	24	24	13	38	18
65 100 12 VKT A	65 100 10 PBG A	65 100 12 VKT B	65 100 10 PBG B	V 12	16,1	10	100	28	28	13	48	20
65 125 14 VKT A	65 125 10 PBG A	65 125 14 VKT B	65 125 10 PBG B	V 14	18,1	10	125	34	34	14	55	22
65 160 17 VKT A	65 160 14 PBG A	65 160 17 VKT B	65 160 14 PBG B	V 17	22,2	14	160	38	38	14	65	25
65 200 19 VKT A	65 200 17 PBG A	65 200 19 VKT B	65 200 17 PBG B	V 19	25,2	17	200	44	44	21	78	28
65 250 22 VKT A	65 250 17 PBG A	65 250 22 VKT B	65 250 17 PBG B	V 22	28,2	17	250	48	48	21	90	32

DIN 469

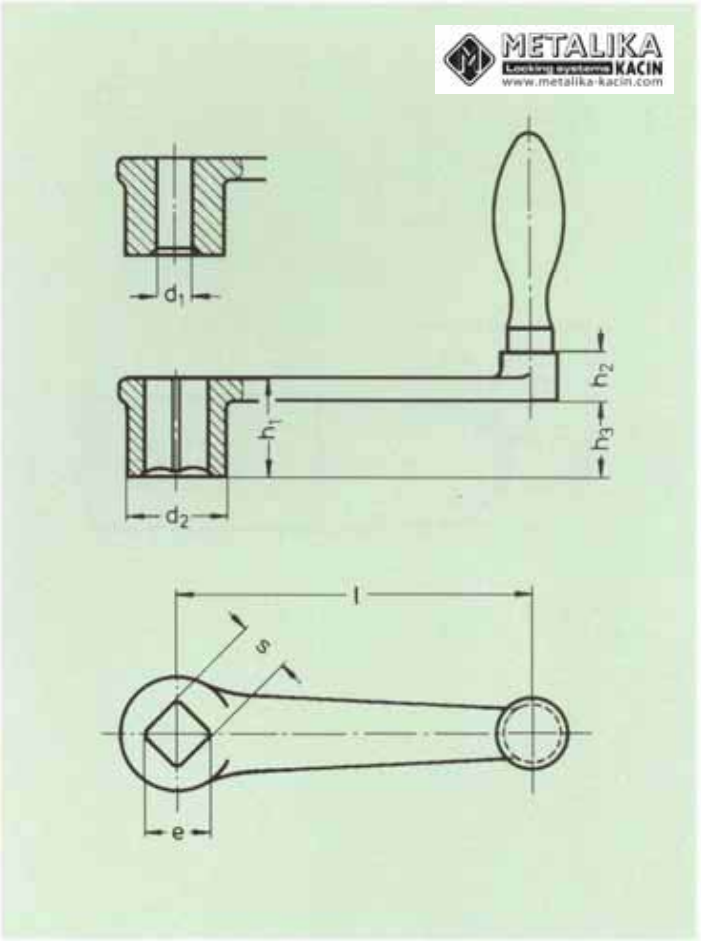

Crank handles DIN 469 are available as standard with steel grips. Grip from plastic (only Type D) can be supplied on request.

Model:
Crank body cast iron (GGG):
Hub machined, cast edge deburred and sand-blasted.

Type C: straight crank with fixed grip.
Type D: straight crank with revolving grip.

Plastic crank handles are available on request.

Zimmermann Straight Crank Handles DIN 469

Order No. Type C with Square Hole S H_{11}	Order No. Type C with Fitting Hole d_1 H_7	Order No. Type D with Square Hole S H_{11}	Order No. Type D with Fitting Hole d_1 H_7	Square Hole SH_{11}	e mm	Fitting Hole d_1 H_7	l mm	d_2 mm	h_1 mm	h_2 mm	h_3 = mm	∅ Ball Grip
65 080 10 VKT C	65 080 08 PBG C	65 080 10 VKT D	65 080 08 PBG D	V 10	13,1	8	80	24	24	13	18	18
65 100 12 VKT C	65 100 10 PBG C	65 100 12 VKT D	65 100 10 PBG D	V 12	16,1	10	100	28	28	13	21	20
65 125 14 VKT C	65 125 10 PBG C	65 125 14 VKT D	65 125 10 PBG D	V 14	18,1	10	125	34	34	14	26	22
65 160 17 VKT C	65 160 14 PBG C	65 160 17 VKT D	65 160 14 PBG D	V 17	22,2	14	160	38	38	14	29	25
65 200 19 VKT C	65 200 17 PBG C	65 200 19 VKT D	65 200 17 PBG D	V 19	25,2	17	200	44	44	21	34	28
65 250 22 VKT C	65 250 17 PBG C	65 250 22 VKT D	65 250 17 PBG D	V 22	28,2	17	250	48	48	21	36	32

Griffe

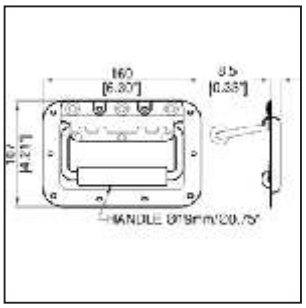

H7159z	Stahlklappgriff in Einbauschale 2 Federn, 8mm-Bügel, starkes Greifgummi	
	0,400 kg/St	Zinc

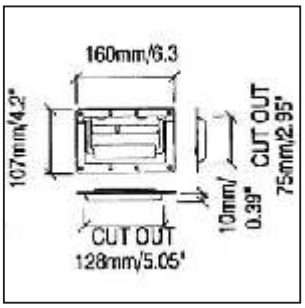

H1050	Stahlklappgriff in Schale, verschweißt	
Steel	0,328 kg/St	Zinc or Black

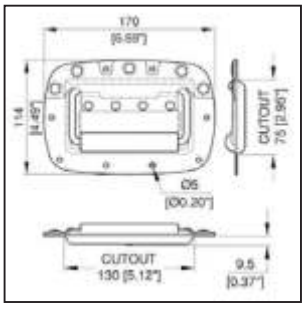

H8154	Stahlklappgriff in gerundeter Schale	
1.5mm Steel	0,380 kg/St	Zinc

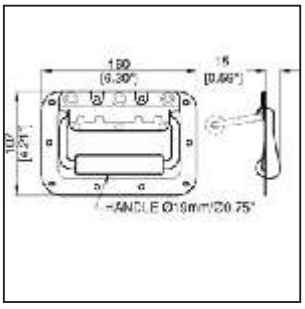

H7149z	Stahlklappgriff in vertiefter Schale 2 Federn, 8mm-Bügel, starkes Greifgummi	
Steel	0,325 kg/St	Zinc

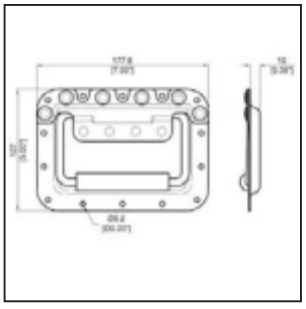

H7165-10	HD-Stahlklappgriff groß in 10mm Schale	
1.5mm Steel	0,490 kg/St	Zinc

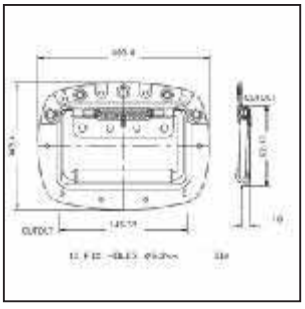

H9165z	Stahlklappgriff in gerundeter Schale, gr	
1.5mm Steel	0,408 kg/St	Zinc

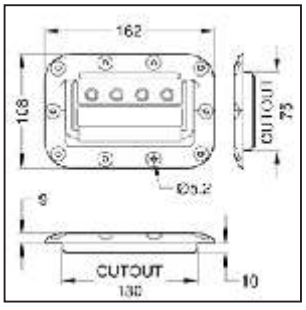

H2751	Klappgriff in ABS-Einbauschale	
ABS	0,199 kg/St	Black

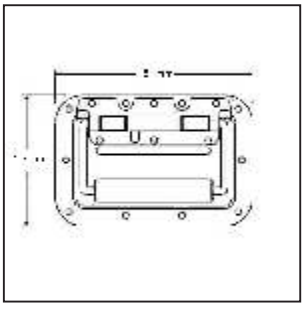

HE-1839AL	Klappgriff in Aluminium-Einbauschale METALIKA Locking systems KACIN www.metalika-kacin.com	
Aluminium	0,256 kg/St	Alu

Griffe

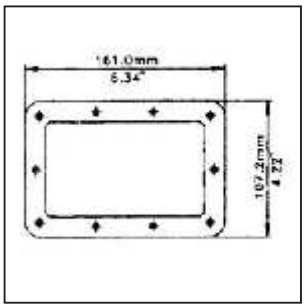

H1906 **H1065/BP**	Nietrahmen zu H1050/51/54/61 und H5054 H1065/BP: Nietrahmen zu H1065 / H7165	
0.9mm Steel	0,049 kg/St	Zinc

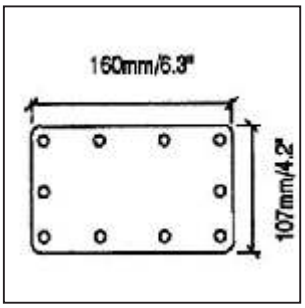

H1085	Nietplatte zu H1050, H1051, H1054, H5054	
0.9mm Steel	0,117 kg/St	Zinc or Black

H..L	Stahlklappgriff mit Ihrem Firmen-Logo (Mindestabnahme 500 Stück)	
Steel	0,327 kg/St	Zinc, Black or Stainless

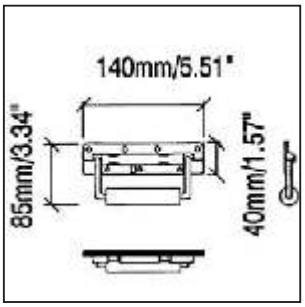

H1052	Aufsatzklappgriff - auch in Edelstahl lieferbar ! -	
1.5mm Steel	0,229 kg/St	Zinc, Black or Stainless

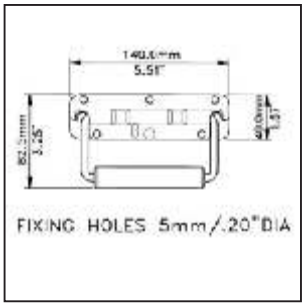

H1053z **H1053Z/WCP**	Aufsatzklappgriff, mit 19mm Greifgummi	
Steel	0,229 kg/St	Zinc

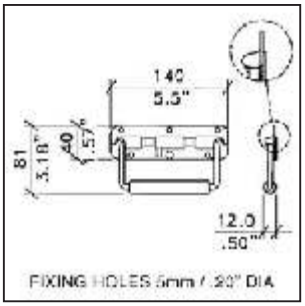

H10527	Aufsatzklappgriff, gekröpft	
1.5mm Steel	0,230 kg/St	Zinc

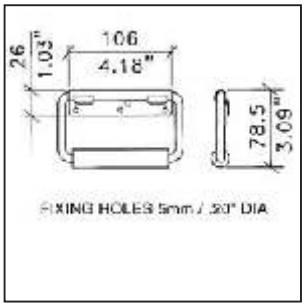

H1078	Aufsatzklappgriff	
Steel	0,220 kg/St	Zinc

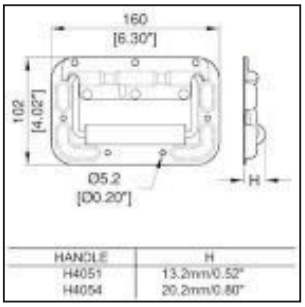

H4051	Aufsatz-Stahlklappgriff mit Rammschutz METALIKA Locking systems KAČIN www.metalika-kacin.com	
Steel	0,000 kg/St	Zinc

Griffe

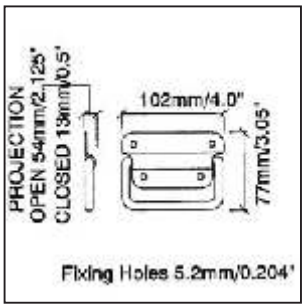

H1030	Aufsatzgriff (ungefedert)	
Steel	0,180 kg/St	Zinc

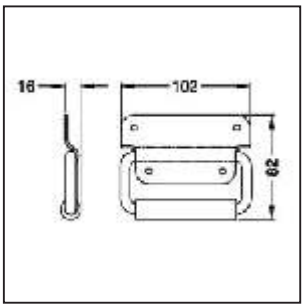

H1030R	Aufsatzgriff (ungefedert) mit extra großem Greifgummi	
Steel	0,180 kg/St	Zinc

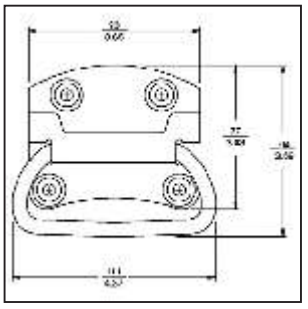

HE-2457	Aufsatzgriff (ungefedert)	
Steel	0,150 kg/St	Zinc

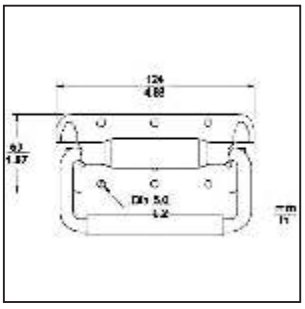

HE-2341AL	Aufsatzklappgriff aus Aluminium	
Aluminium	0,106 kg/St	Alu

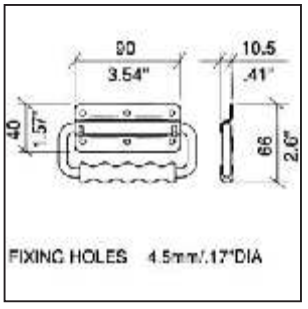

H1079	Aufsatzklappgriff aus Aluminium	
Aluminium	0,060 kg/St	Anodized

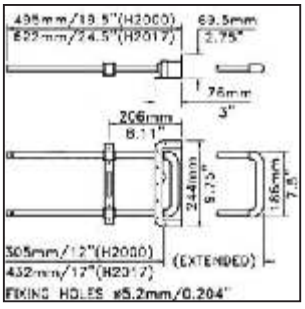

H2000 **H2017**	Einbau-Teleskopgriff (H2000: Länge 12" / H2017: Länge 17")	
Steel/ABS	0,750 kg/St	Black

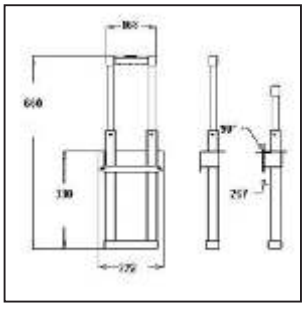

H4117	Einbau-Teleskopgriff, 66cm	
Steel	1,000 kg/St	Black

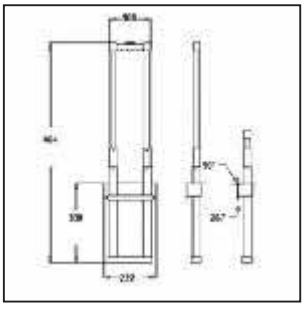

H4116	Einbau-Telskopgriff, 86.5cm	
Steel	1,000 kg/St	Black

Griffe

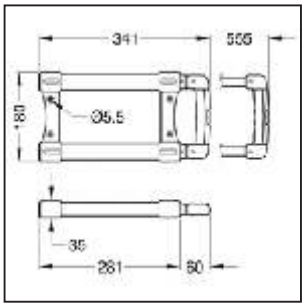

4080	Aufsatz-Teleskopgriff, 555x180	
Steel	1,000 kg/St	Black

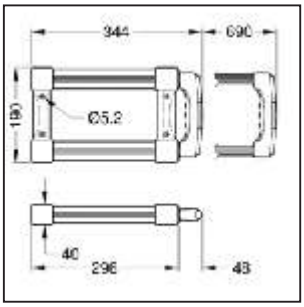

4081	Aufsatz-Teleskopgriff, 690x190	
Steel	1,000 kg/St	Black

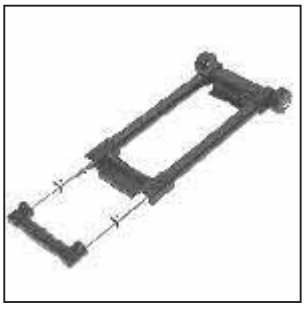

4512	Trolley-Griff, 235mm Breite	
Steel	1,000 kg/St	Black

4515	Trolley-Griff, 335mm Breite	
Steel	1,000 kg/St	Black

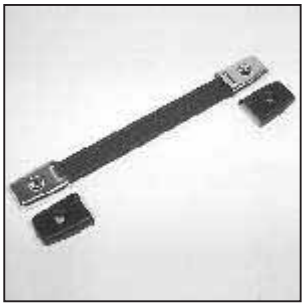

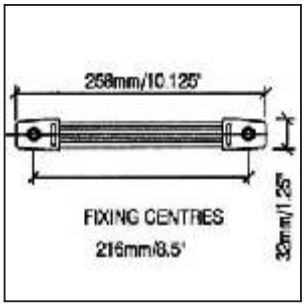

H1010 **(4310)**	Riemengriff mit Stahl-Endkappen	
Steel/PVC	0,126 kg/St	Endcaps: Zinc or Black

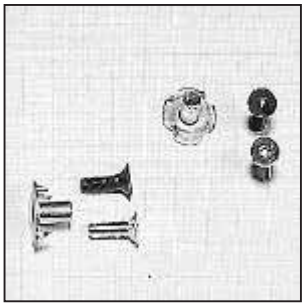

4319	Befestigungssatz zu H1010 (4310)	
Steel	0,012 kg/St	Zinc or Black

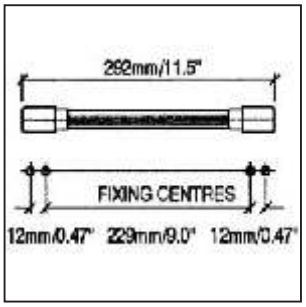

H1195	Riemengriff mit Stahl-Endkappen	
Steel/PVC	0,110 kg/St	Endcaps: Nickel

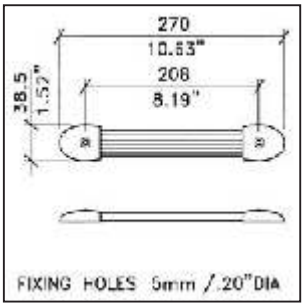

H1009/01	Riemengriff mit ABS-Endkappen	
Steel/PVC	0,100 kg/St	Black

Griffe

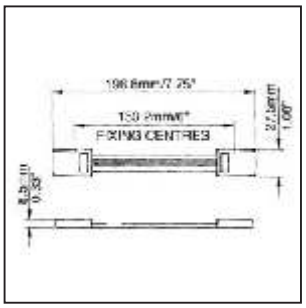

H1013	Riemengriff mit ABS-Endkappen	
Steel/PVC	0,030 kg/St	Black

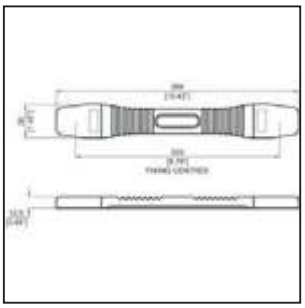

H8012	Riemengriff mit ABS-Endkappen	
Steel/PVC	0,120 kg/St	

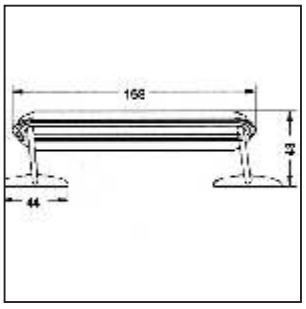

4200	Ledergriff mit elastischer Innenstrebe Nietstifte umgebördelt	
Leather/ABS	0,084 kg/St	Black; Fittings: Zinc

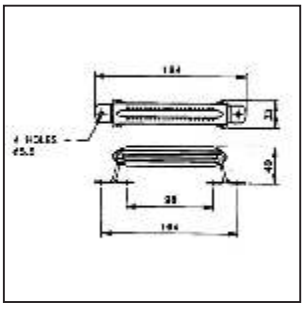

4210	Ledergriff (Vollrindleder) Nietstifte umgebördelt	
Leather	0,086 kg/St	Black; Fittings: Zinc

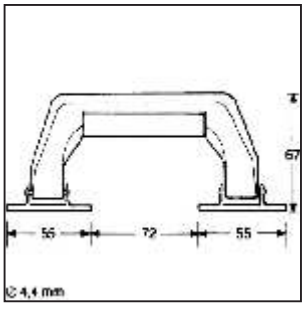

4230	Attachékoffer-Griff	
ABS	0,066 kg/St	Black; Fitt.: Zinc or Black

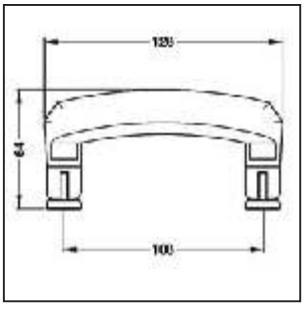

HO-7960k **H1428**	Attachékoffer-Griff (Osaka 7960s)	
ABS/Steel	0,110 kg/St	Black

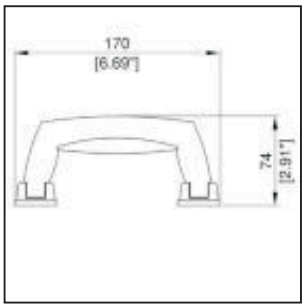

H1432 **H1431**	Attachékoffer-Griff, chromfarben/schwarz H1431: Attachékoffer-Griff, schwarz	
	0,060 kg/St	

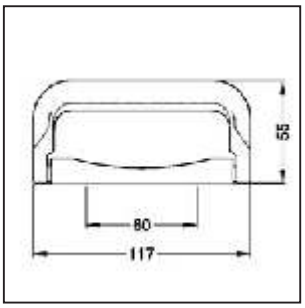

4260	Attachékoffer-Griff	
ABS	0,066 kg/St	Black

Griffe

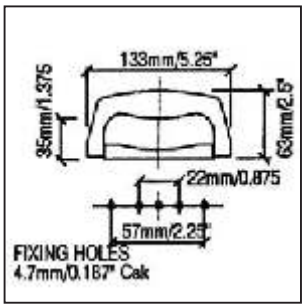

H1425	Attachékoffer-Griff	
ABS	0,062 kg/St	Black; Fittings: Nickel

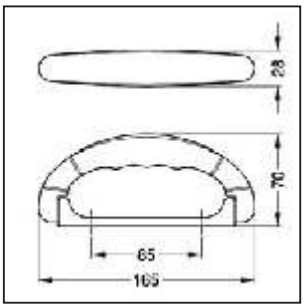

4245	Attachékoffer-Griff	
ABS	0,066 kg/St	Black

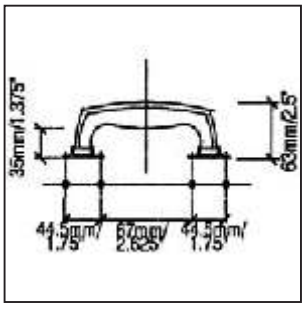

H1430	Attachékoffer-Griff	
ABS	0,055 kg/St	Black; Fittings: Nickel

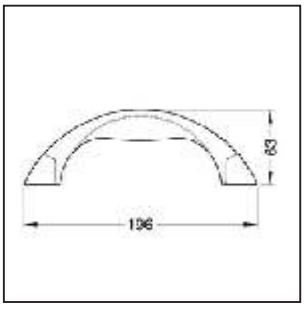

H1423	Attachékoffer-Griff	
ABS	0,062 kg/St	Black

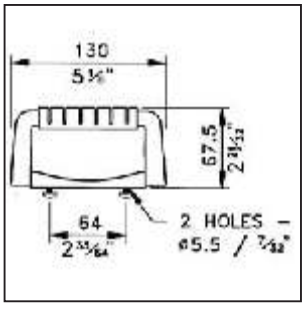

HO-7305/3593 **H1605**	Attachékoffer-Griff mit Chrom-Abdeckung	
ABS/Alloy	0,060 kg/St	Black; Cap: Chrome

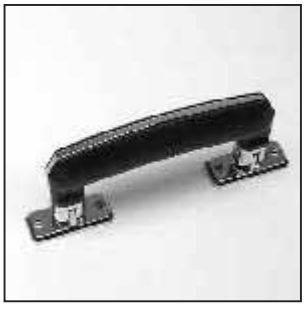

HO-7960Tk	Attachékoffer-Griff, chromverziert	
ABS/Steel	0,110 kg/St	Black; Fittings: Chrome

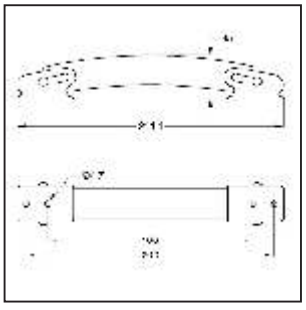

H1190	Attachékoffer-Griff “Hip-Hop”	
Steel	0,190 kg/St	Nickel

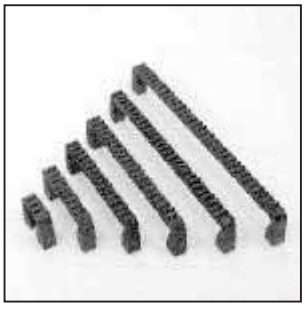

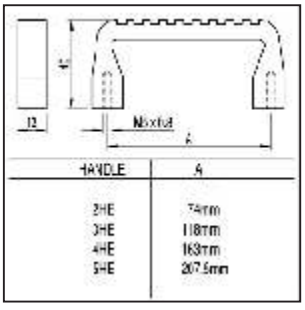

R1266/..UA	Aluminium-Bügelgriffe für 19"-Gehäuse	
Aluminium	0,80 kg (4U)	Silver anodized or Black

Griffe

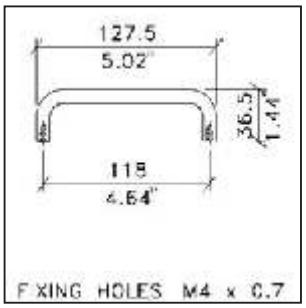

R1265/3U	Stahl-Bügelgriff 120mm	
Steel	0.070 kg	Black or Chrome

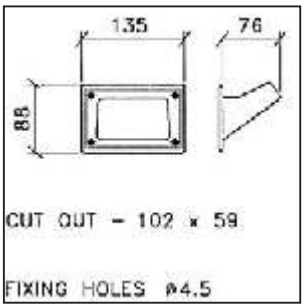

H1006	Muldengriff, Plastik	
ABS	0,030 kg/St	Black

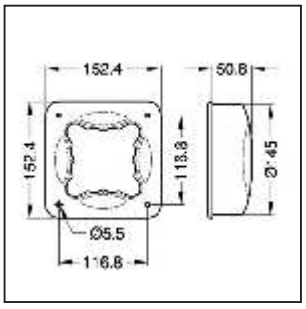

H1028	Schalengriff, allseitig einfassbar	
ABS	0,178 kg/St	Black

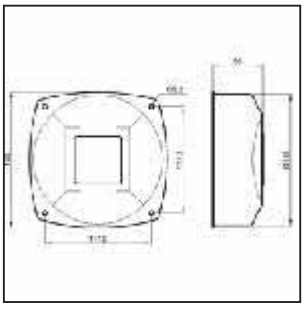

H1028CUP/FXH	Haube zur rückseitigen Monatge an H1028	
ABS	0,178 kg/St	Black

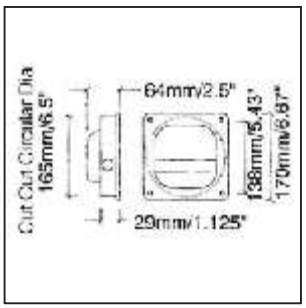

H1076	Schalengriff 17.5x17.5, ABS	
ABS	0,160 kg/St	Black

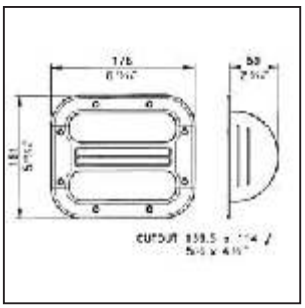

H1015	Schalengriff 17.5x15.1, ABS Lable-Druck auf Einkleber H1016 möglich	
ABS	0,150 kg/St	Black

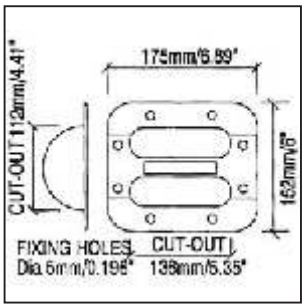

H1017	Schalengriff HD 17.5x15.2, ABS Lable-Druck auf Einkleber H1016 möglich	
ABS/Dc.AL	0,180 kg/St	Black

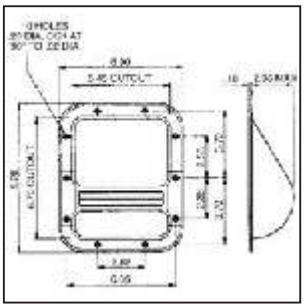

H1023	Schalengriff HD 17.5x21, ABS Lable-Druck auf Einkleber H1016 möglich	
ABS/Dc.AL	0,180 kg/St	Black

Griffe

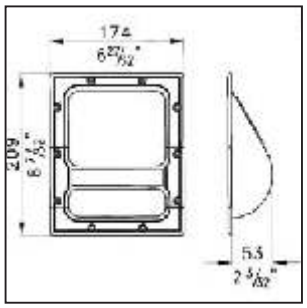

H1024	Schalengriff HD, 17.5x21, ABS, eckig	
ABS	0,180 kg/St	Black

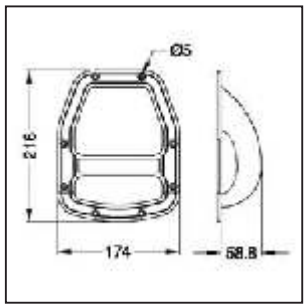

H1027	Schalengriff HD 17.5x21.6, ABS	
ABS/Dc.AL	0,180 kg/St	Black

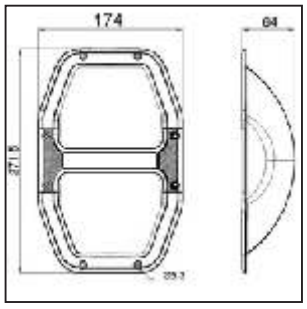

H1027/DB	Schalengriff HD 17.4x27.2, AB, d+b style	
ABS/Dc.AL	0,279 kg/St	Black

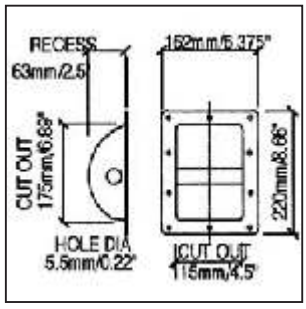

H1105	Stahl-Schalengriff, klein, 10 Bohrungen mit runder Griffleiste	
0.9mm Steel	0,540 kg/St	Black

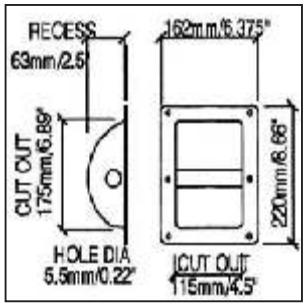

H1105/06	Stahl-Schalengriff klein, 6 Bohrungen mit runder Griffleiste	
0.9mm Steel	0,540 kg/St	Black

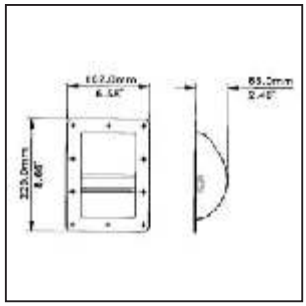

H1104	Stahl-Schalengriff klein, 10 Bohrungen Lable-Druck auf Einkleber H1016 möglich	
0.9mm Steel	0,540 kg/St	Black

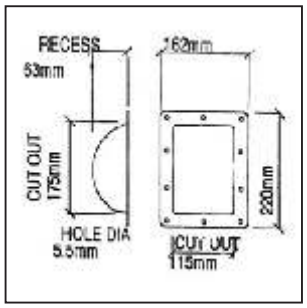

H1107	Haube zur rückseitigen Montage an H1105	
Steel	0,540 kg/St	Black

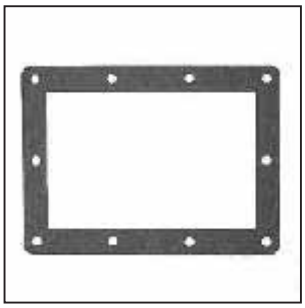

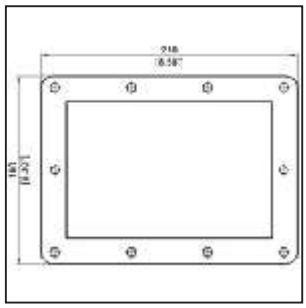

H1105G	Selbstklebender Dichtungsring zu H1105ff	
Rubber	0,010 kg/St	Black

Griffe

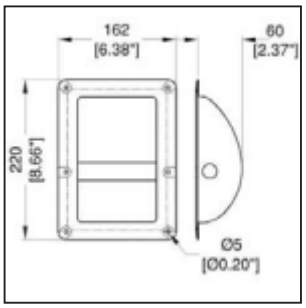

H8805-06	Stahl-Schalengriff klein, 6 Bohrungen mit runder Griffleiste	
0.9mm Steel	0,460 kg/St	Black

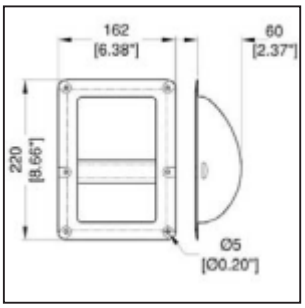

H8804-06	Stahl-Schalengriff klein, 6 Bohrungen Lable-Druck auf Einkleber H1016 möglich	
0.9mm Steel	0,460 kg/St	Black

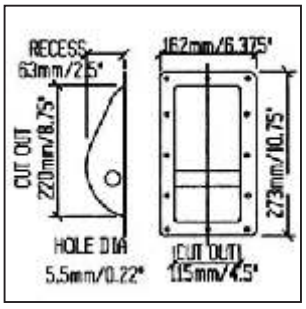

H1070	Stahl-Schalengriff, groß, 12 Bohrungen	
0.9mm Steel	0,570 kg/St	Black

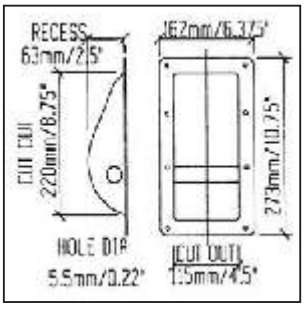

H1071	Stahl-Schalengriff, groß, 8 Bohrungen	
0.9mm Steel	0,570 kg/St	Black

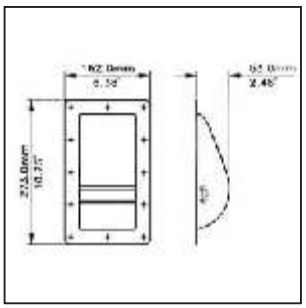

H1069	Stahl-Schalengriffl, groß, beschriftbar Lable-Druck auf Einkleber H1016 möglich	
0.9mm Steel	0,570 kg/St	Black

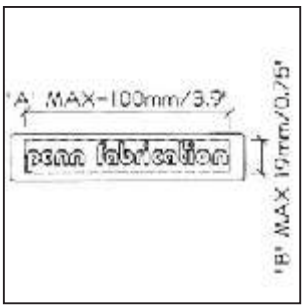

H1016	Label-Einkleber für H1015ff Bedruckung auf Anfrage	
PVC	0,010 kg/St	Black or Special Print Colour

H1105/91	Kanten-Schalengriff, Stahl	
ABS	0,460 kg/St	Black

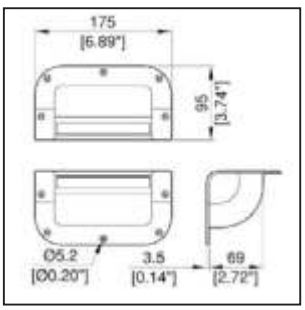

H102490	Kanten-Schalengriff, ABS/Alu Lable-Druck auf Einkleber H1016 möglich	
ABS/Alu	0,390 kg/St	Black

METALIKA

KOMPONENTE ZA INDUSTRIJU KACIN

ZATVARAMO - OTVARAMO - NIVELIŠEMO - POVEZUJEMO

Široki izbor okova i pribora za proizvodnju prekidnih i upravljačkih ormarića, kućišta za elektroopremu, elektroniku, telekomunikacijsku, tehnološku, klimatsku i drugu tehniku, za ugradnju kod izrade mašinske opreme i vozila.

Brave, zatvarači, sistemi zatvaranja

Šarke, klavirski šarniri, spone

Ručke, pribor, kopče

Zaptivni gumeni profili

Plinski amortizeri

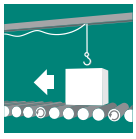

Transportni valjci i transportna oprema

Točkovi - stabilni, okretni

Standardni elementi za stezanje

Adapteri za punjenje plinskih medija

Plastični čepovi, zavrtnji, elementi

Teleskopske kuglične vodilice, šine

Ostali okovi, INOX program, magneti, oprema za vatrogasna vozila

www.metalika-kacin.com

METALIKA KACIN d.o.o.
Kir Janjina 2
11253 SREMČICA

+381 011/ 25 21 756
+381 062 / 311 768
srbija@metalika-kacin.com