DIRAK
www.dirak.com

6-130 Dual Ball Catch

METALIKA Locking systems KACIN
www.metalika-kacin.com

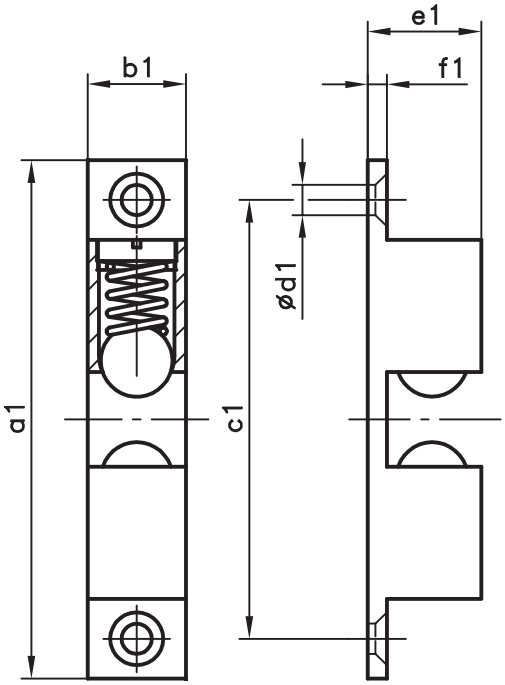

Ball catch

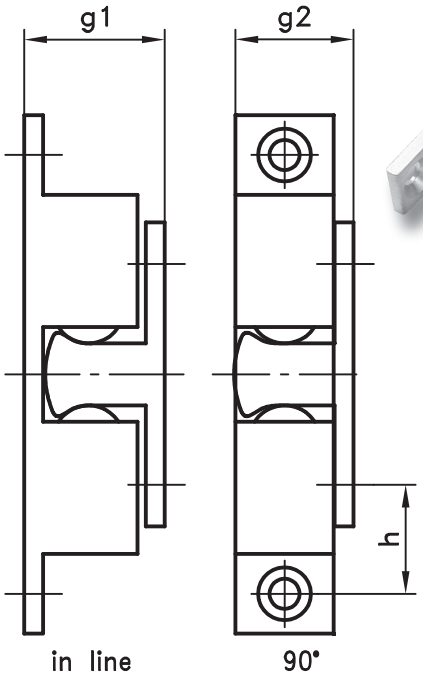

in line 90°

Assembly

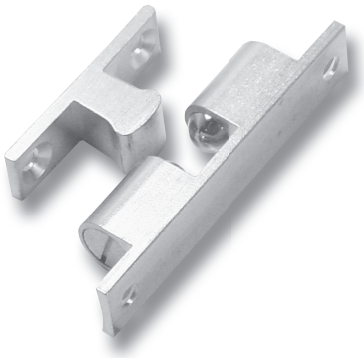

Material:

- **Ball catch and counterpart:** brass or brass, chrome plated
- **Spring:** stainless steel
- **Ball:** stainless steel

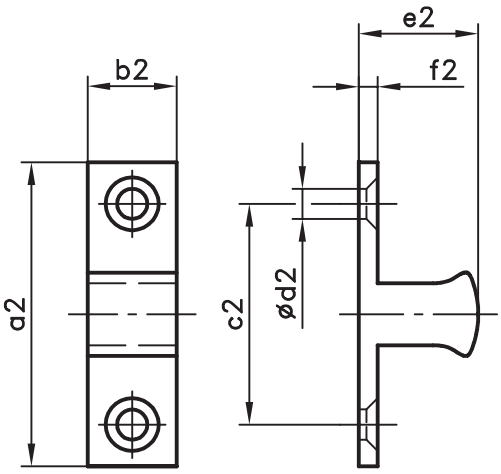

Counterpart

	chrome	Ball catch						Counterpart						Assembly		
brass	plated	a1	b1	c1	d1	e1	f1	a2	b2	c2	d2	e2	f2	g1	g2	h
263-9001	263-9007	44	8.0	35.0	3.5	9.4	2.0	24.7	6.6	15.2	3.5	9.8	1.7	11.8	9.7	9.9
263-9002	263-9008	49	8.8	39.8	3.8	10.6	2.0	28.8	7.6	19.8	3.8	11.2	2.0	13.2	10.8	10.0
263-9003	263-9009	59.8	11.2	49.8	4.8	13.2	2.4	34.8	9.2	24	4.8	13.5	2.2	15.9	13.4	12.9
263-9004	263-9010	68.4	13.0	58.0	4.8	15.0	2.4	40.2	12	30	4.8	15.7	2.2	18.1	15.2	14.0

DIRAK RoHS WEEE compliant

12/16/08

© copyright by DIRAK / Germany

DIRAK GmbH - Königsfelder Str. 1 - D-58256 Ennepetal - Phone: +49 (0) 2333/837-0 - Fax: +49 (0) 2333/837-100

Springloaded latches - bolt «nose-up»

Slam latches.

Part number	Material	Finish	A	B	C	D	E	F	G	H	J	K	S	Weight (g)
16-1-3625	steel	zinc plated	35	36.5	1.2	1	11	13.5	23	19	8	8	3.5	20
16-1-3626	brass	chrome plated	35	36.5	1.2	1	11	13.5	23	19	8	8	3.5	24
16-1-3628	steel	zinc plated	50	56	1.5	1.2	16	19	34	29.5	12	11	4.8	71
16-1-3629	brass	chrome plated	50	56	1.5	1.2	16	19	34	29.5	12	11	4.8	75
16-1-3631	steel	zinc plated	70	73	2	1.5	22	28	45	38	16	16	7	129
16-1-3632	brass	chrome plated	70	73	2	1.5	22	28	45	38	16	16	7	163

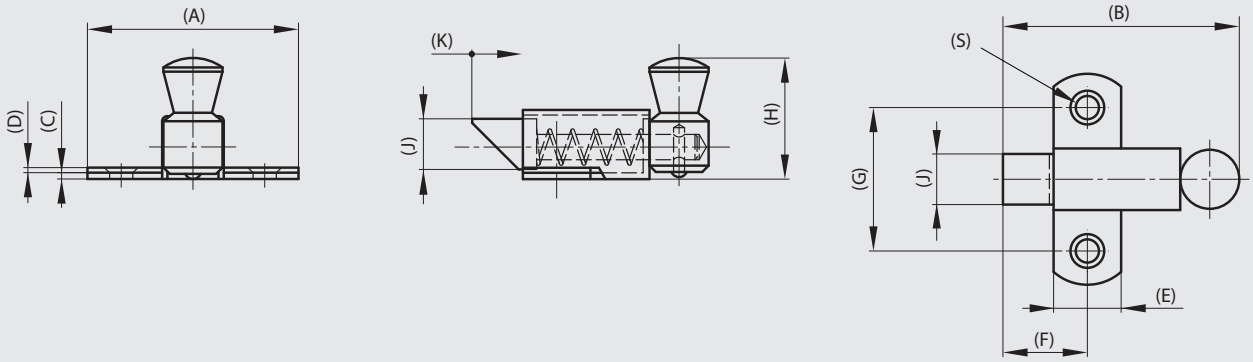

Springloaded latches - bolt «nose-down»

Slam latches.

Part number	Material	Finish	A	B	C	D	E	F	G	H	J	K	S	Weight (g)
16-1-3430	steel	zinc plated	35	36.5	1.2	1	11	13.5	23	19	8	8	3.5	20
16-1-3431	brass	chrome plated	35	36.5	1.2	1	11	13.5	23	19	8	8	3.5	24
16-1-3433	steel	zinc plated	50	56	1.5	1.2	16	20	34	27	12	12	4.8	71
16-1-3434	brass	chrome plated	50	56	1.5	1.2	16	20	34	27	12	12	4.8	75
16-1-3436	steel	zinc plated	70	73	2.0	1.5	22	28	45	38	16	16	7	129
16-1-3437	brass	chrome plated	70	73	2.0	1.5	22	28	45	38	16	16	7	163

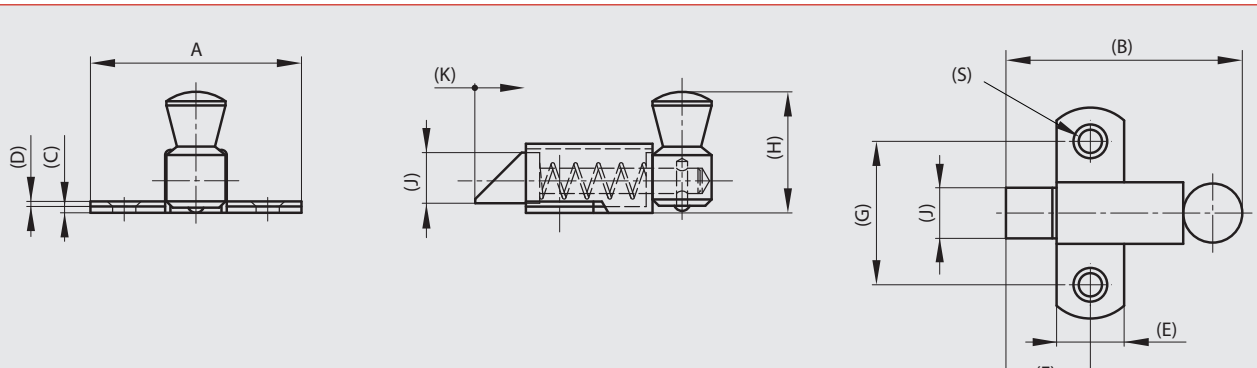

Strikes for latches with dimension A = 35, 50 and 70

Part number	Material	Finish	A	B	C	D	G	H	S	Weight (g)
16-1-3633	steel	zinc plated	35	11	1.2	11.5	23	11.5	3.5	4.5
16-1-3634	brass	chrome plated	35	11	1.2	11.5	23	11.5	3.5	5
16-1-3636	steel	zinc plated	50	16	1.5	16	34	16	4.8	12
16-1-3637	brass	chrome plated	50	16	1.5	16	34	16	4.8	13
16-1-3639	steel	zinc plated	70	19	2	19	43.5	21	7	32
16-1-3640	brass	chrome plated	70	19	2	19	43.5	21	7	33

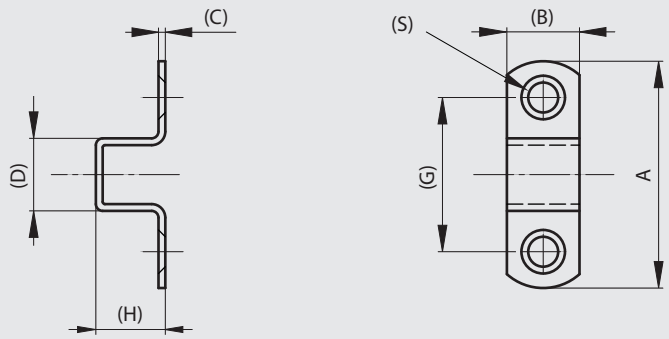

Hooked cam

Hooked cam can be fitted to any standard quarter turn.
A full product data sheet is available on our website.

Part number	Material	Finish	Note	Weight (g)
16-7-4061	zinc die-cast	zinc plated	right	40
16-7-4062	zinc die-cast	zinc plated	left	40

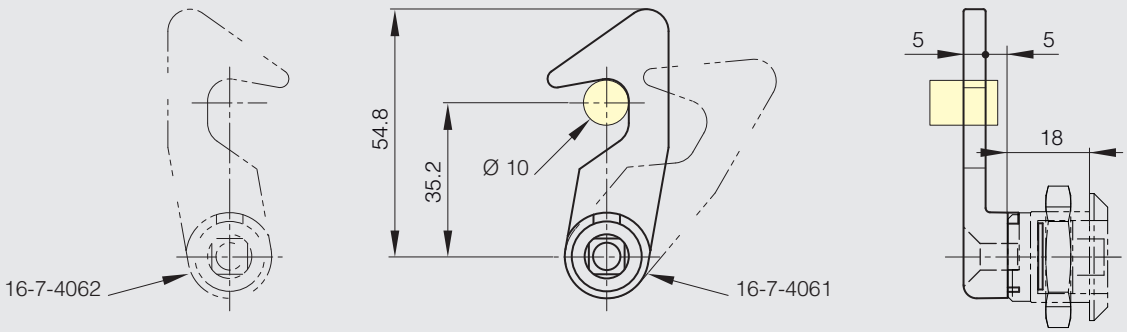

Paddle latches 68.5 x 84 mm

Available with or without key.
Keyed alike for version with cylinder.

Part number	Material	Finish	A	B	Note	Weight (g)
16-1-4087	steel	chrome plated	68.5	84	with key	184
16-1-4106	steel	zinc plated	68.5	84	with key	184
16-1-4108	304 stainless steel	raw	68.5	84	with key	184
16-1-4105	steel	zinc plated	68.5	84	without key	184
16-1-4217	steel	black	68.5	84	without key	184
16-1-4107	304 stainless steel	raw	68.5	84	without key	184

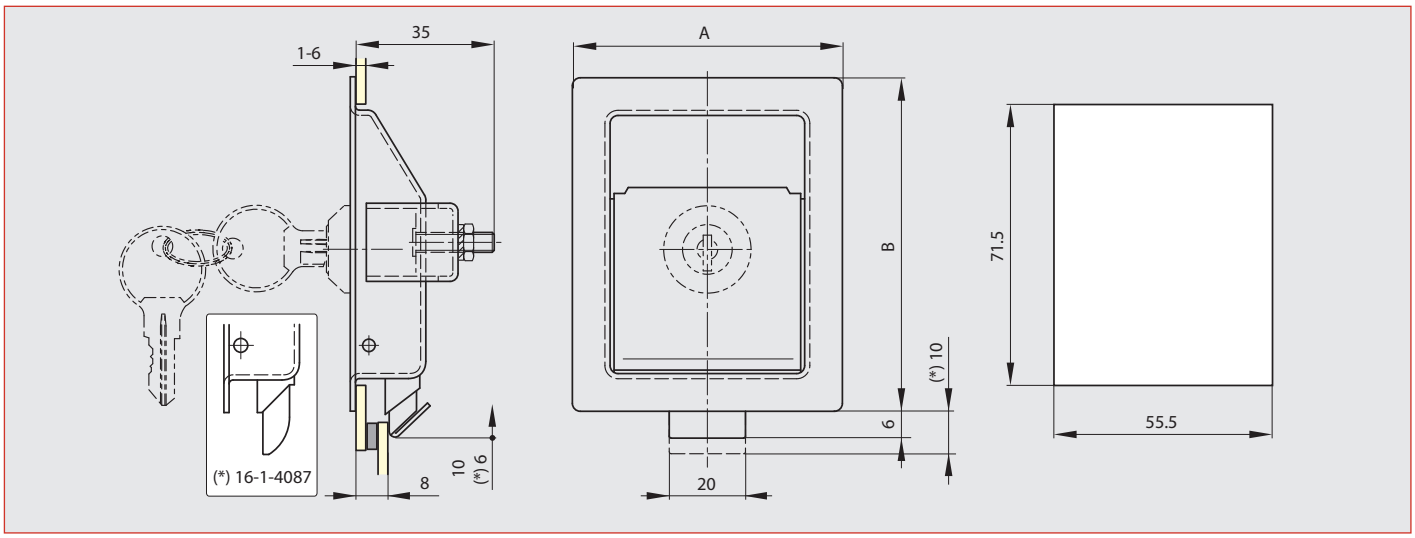

Slam latch without strike

Non handed fitting. Strike not included.

Part number	Material	Finish	A	B	C	Weight (g)
16-7-3698	steel	zinc plated	50	45	12.5	118

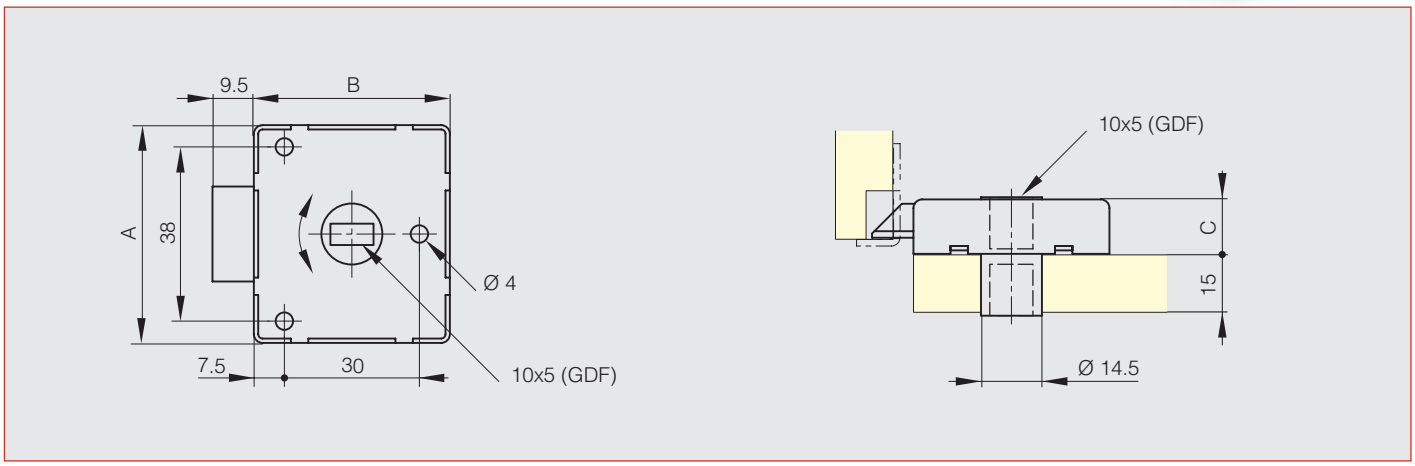

Springloaded bolt - reversible bolt

Slam blot - reversible.
Bolt can be manually unassembled to be positioned ‘nose-up’ or ‘nose-down’.

Part number	Material	Finish	A	B	C	Note	Weight (g)
16-7-4220	steel	zinc plated	63.2	57	17.4	bolt delivered ‘nose-up’	185
16-7-3835	304 stainless steel	raw	63.2	57	17.4	bolt delivered ‘nose-down’	185

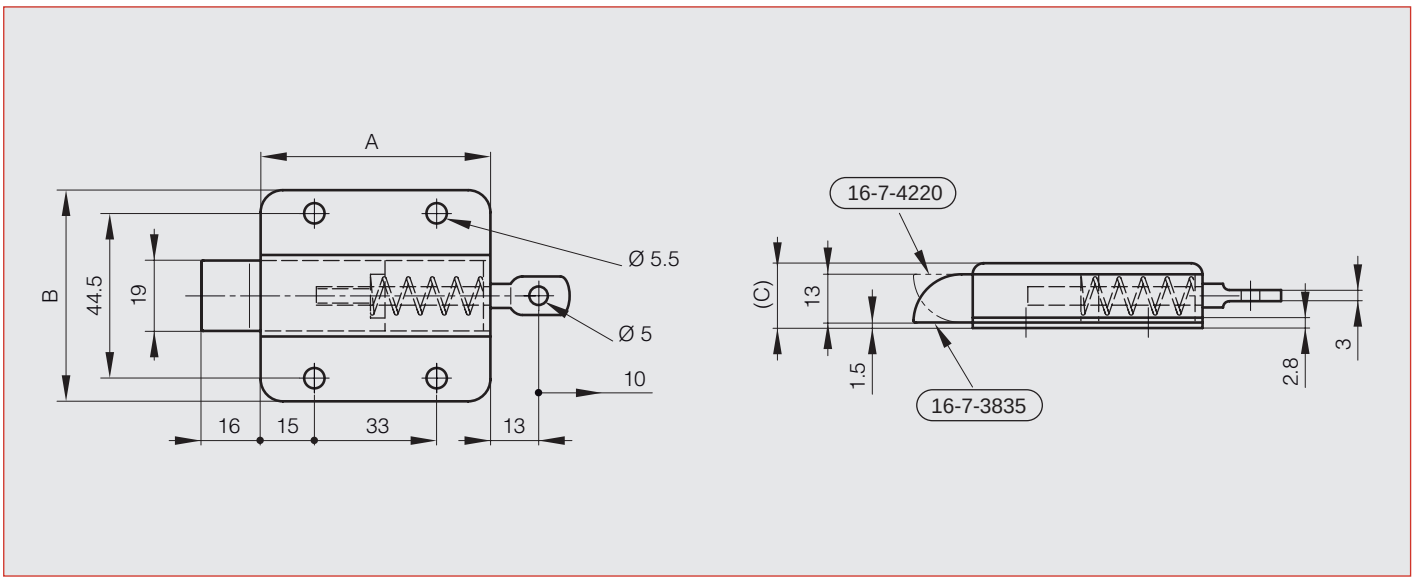

Slam latch in stainless steel

The range of slam latches from Pinet grows with a robust stainless bolt, suitable for use in corrosive environments. This spring-loaded latch is especially designed to be pleasant, rustproof and easy to clean.

Main features :
- Slam latche for automatic closing
- Bolt « nose-up »
- Bolt « nose-down »
- Stainless steel components - rustproof and resistant to cleaning agents
- Apertures on the top and the bottom to allow easy cleaning (no retention of water or dirt)
- No sharp edges - No risk of wound during use
- Attractive design
- Easy opening with lever on the top

Stainless steel slam latch « nose-up » 16-1-4265

Application exemples :
- Food industry equipments
- Farming hardware (ie feeding cage…)
- Doors of metal enclosures
- Wet environments...

Material :
Body and plate : 304L stainless steel
Bolt and lever : 303 stainless steel
Spring : 301 stainless steel

Part number :
- Bolt « nose-up » : **16-1-4265**
- Bolt « nose-down » : **16-1-4282**

Stainless steel slam latch « nose-down » 16-1-4282

Slam latch in stainless steel

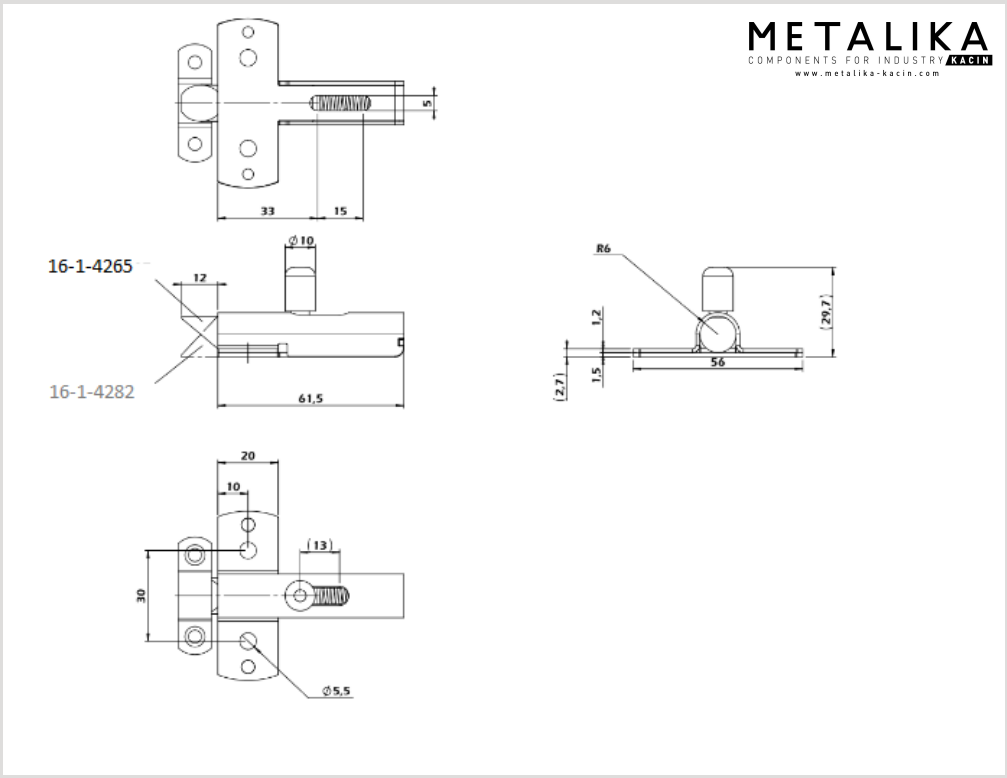

Additional information :
Stroke : 12 mm

Subject to technical changes

Pinet Industrie • 9, rue de l'Etang • Parc international d'activités Paris Nord 2
BP 62036 • 95971 Roissy Charles de Gaulle Cedex • France
Tél. : 33 (0)1 49 38 27 00 • Fax : 33 (0)1 48 63 77 70 • www.pinet.tm.fr

SAS au capital de 4 118 400 € • RCS Bobigny et SIRET • B 407 485 556 00010 • Code NAF : 286 F

Fixing Bolts

from Steel resp. Stainless Steel

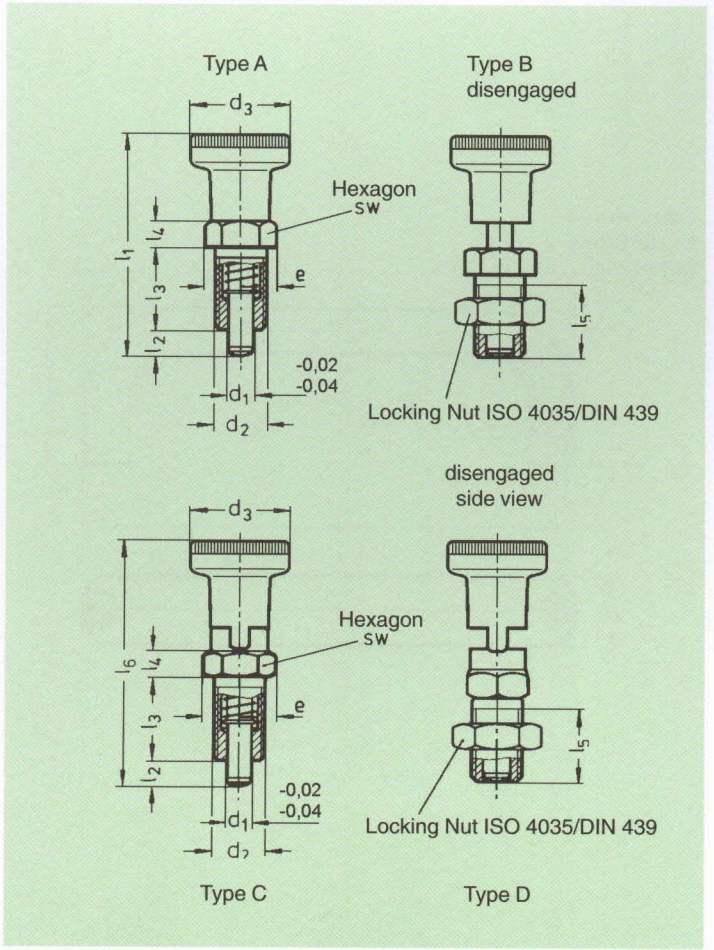

Model Steel: Knob from polyamide black matt. Steel parts stability class 5.8, black oxide finish. Locking bolt hardened and ground.

Model Stainless Steel: Knob from polyamide black matt. Steel parts from stainless steel, Material No. 1.4305. Locking bolt ground and nitrated.

Type A: without Fixing Slot, without Locking Nut
Type B: without Fixing Slot, with Locking Nut
Type C: with Fixing Slot, without Locking Nut
Type D: with Fixing Slot, with Locking Nut

Note for Zimmermann Fixing Bolts:

Fixing bolts are used when a change of resting position by axial loads has to be avoided. Another resting position only can be choiced if bolt has been pressed out manually. If fixing pin has to be locked out longer time and unintentional resting has to be avoided, please use Type C resp. Type D.

Zimmermann Fixing Bolts - Steel

Order No. Type A	Order No. Type B	Order No. Type C	Order No. Type D	Size d_1 mm	d_2 mm	d_3 mm	e mm	l_1 mm	l_2 min. mm	l_3 mm	l_4 mm	l_5 mm	l_6 min. mm	sw
30 05 A	30 05 B	30 05 C	30 05 D	5	M 10 x 1	21	13,8	45	5	17	5	15	51	12
30 06 A	30 06 B	30 06 C	30 06 D	6	M 12 x 1,5	25	16,2	54,5	6	20	6	17	61	14
30 08 A	30 08 B	30 08 C	30 08 D	8	M 16 x 1,5	31	21,9	69	8	26	8	23	75,5	19
30 10 A	30 10 B	30 10 C	30 10 D	10	M 20 x 1,5	31	25,4	80	10	33	10	30	91	22

Zimmermann Fixing Bolts - Stainless Steel

Order No. Type A	Order No. Type B	Order No. Type C	Order No. Type D	Size d_1 mm	d_2 mm	d_3 mm	e mm	l_1 mm	l_2 min. mm	l_3 mm	l_4 mm	l_5 mm	l_6 min. mm	sw
30 05 A E0A	30 05 B E0A	30 05 C E0A	30 05 D E0A	5	M 10 x 1	21	13,8	45	5	17	5	15	51	12
30 06 A E0A	30 06 B E0A	30 06 C E0A	30 06 D E0A	6	M 12 x 1,5	25	16,2	54,5	6	20	6	17	61	14
30 08 A E0A	30 08 B E0A	30 08 C E0A	30 08 D E0A	8	M 16 x 1,5	31	21,9	69	8	26	8	23	75,5	19
30 10 A E0A	30 10 B E0A			10	M 20 x 1,5	31	25,4	80	10	33	10	30		22

Fixing Bolts

without Collar
Steel/ Stainless Steel

Fixing bolts without collar are a low cost alternative.

Model Steel: Knob from polyamide black matt. Steel parts stability class 5.8, black oxide finished. Locking bolt hardened and ground.
Model Stainless Steel: Steel parts from stainless steel, material no. 1.4305. Locking bolt ground and nitrated.

A special screwdriver is available. Two slots are provided in the upper end of the body which are accessible with the knob in its retracted position.

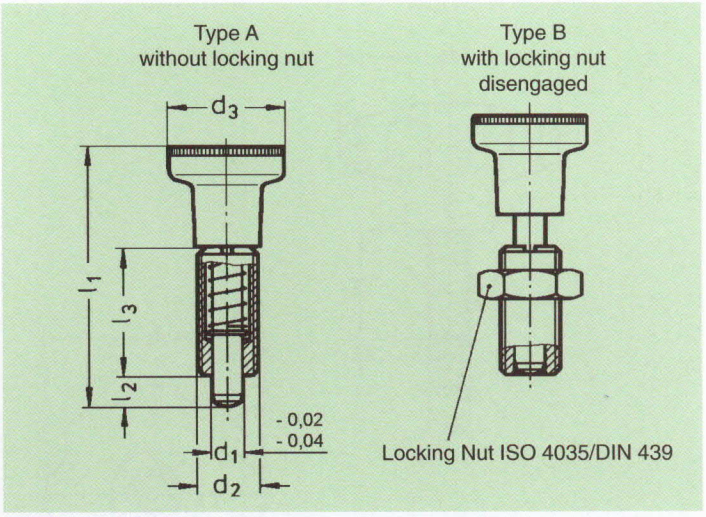

Zimmermann Fixing Bolts without Collar - Steel resp. Stainless Steel

Order No. Steel Type A	Order No. Steel Type B	Order No. Stainless Steel Type A	Order No. Stainless Steel Type B	Größe d_1 mm	d_2 mm	d_3 mm	l_1 mm	l_2 min. mm	l_3 mm	Order No. Screw Driver
59 05 A	**59 05 B**	**59 05 A E0A**	**59 05 B E0A**	5	M 10 x 1	21	44	5	22	**59 05 S**
59 06 A	**59 06 B**	**59 06 A E0A**	**59 06 B E0A**	6	M 12 x 1,5	25	53	6	26	**59 06 S**
59 08 A	**59 08 B**	**59 08 A E0A**	**59 08 B E0A**	8	M 16 x 1,5	31	67	8	34	**59 08 S**
59 10 A	**59 10 B**	**59 10 A E0A**	**59 10 B E0A**	10	M 20 x 1,5	31	78	10	43	**59 10 S**

FIXING BOLTS

ZIMMERMANN

without Thread

Fixing bolts without thread are for applications where welding or resin bonding is favoured. Type G with threaded bolt end are for applications where a special knob to customers own design is required or for such cases where the spindle is linked directly to an operating mechanism.

Model: Knob from polyamide black matt. Steel parts black oxide finished, weldable. Locking bolt hardened and ground.

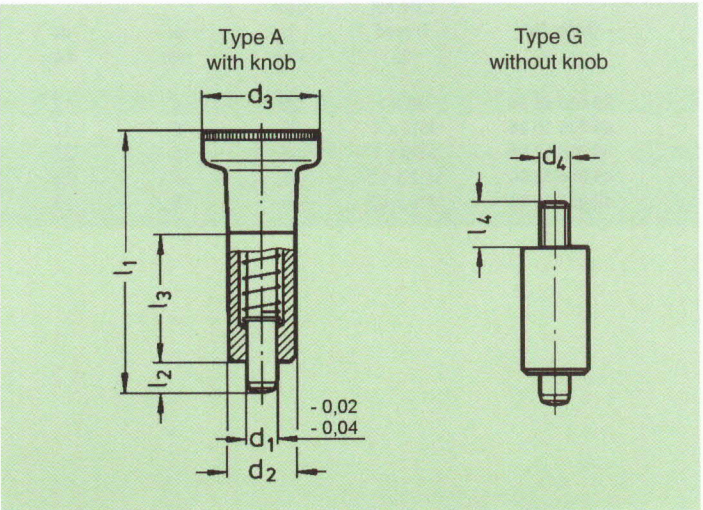

Zimmermann Fixing Bolts without Thread

Order No. Type A	Order No. Type G	Size d_1 mm	$d_{2\,h9}$ mm	d_3 mm	d_4 mm	l_1 mm	l_2 min. mm	l_3 mm	l_4 mm
58 05 A	**58 05 G**	5	12	21	M 5	44	5	22	6
58 06 A	**58 06 G**	6	14	25	M 6	53	6	26	10
58 08 A	**58 08 G**	8	18	31	M 8	67	8	34	12

Fixing and Clamping Knobs

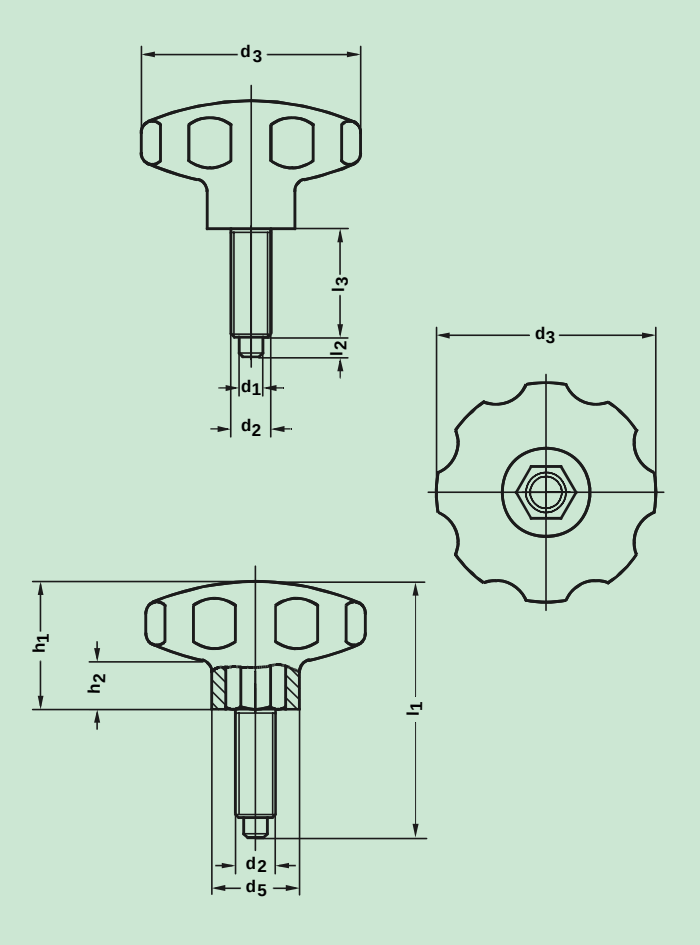

METALIKA
COMPONENTS FOR INDUSTRY KACIN
www.metalika-kacin.com

Zimmermann Fixing and Clamping Knobs allow for quick and precise positioning, securing and clamping of adjusting elements.

Especially efficient for moving telescopes or similar applications.

Model: Body from polyamide, black. Screw from steel, zinc-plated.

Zimmermann Fixing- and Clamping Knobs

Order No.	External Thread d_2	Size d_3 mm	d_1 mm	d_5 mm	l_1 mm	l_2 mm	l_3 mm	h_1 mm	h_2 mm
49 025 08 04	M8 x 1	25	4	12	35	5	10	20	8
49 025 10 05	M10 x 1	25	5	12	38	5	13	20	8
49 025 12 06	M12 x 1,5	25	6	12	43	6	17	20	8
49 035 10 05	M10 x 1	35	5	17	47	5	15	27	10
49 055 10 05	M10 x 1	55	5	25	52	5	15	32	12
49 055 12 06	M12 x 1,5	55	6	25	58	6	20	32	12
49 055 16 08	M16 x 1,5	55	8	25	68	9	27	32	12
49 065 16 08	M16 x 1,5	65	8	30	70	8	22	40	14

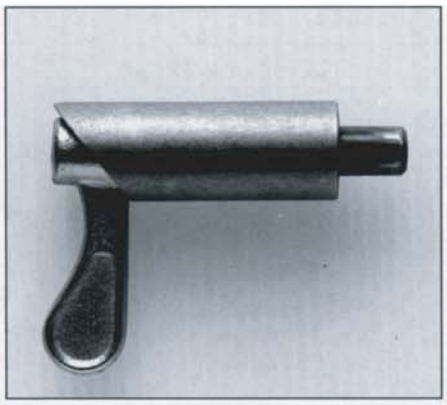

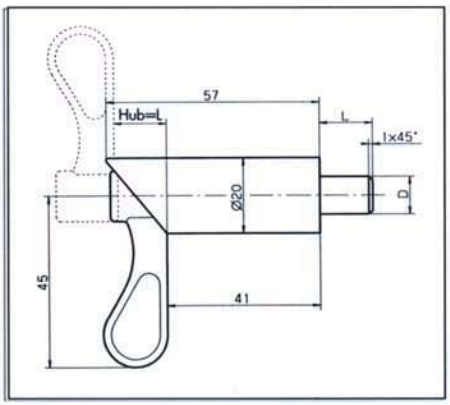

Typ S

Ø=D	Hub=L*	Bestell-Nr.
08	14	S 0814
10	10	S 1010
10	14	S 1014
12	14	S 1214
15	14	S 1514

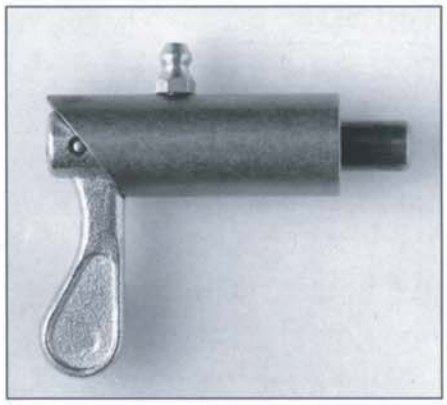

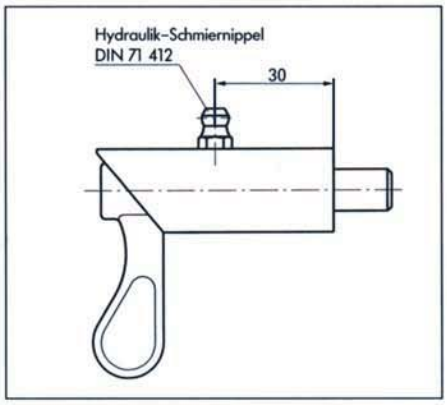

Typ S

Ø=D	Hub=L*	Bestell-Nr.
08	14	S 0814 HN
10	10	S 1010 HN
10	14	S 1014 HN
12	14	S 1214 HN
15	14	S 1514 HN

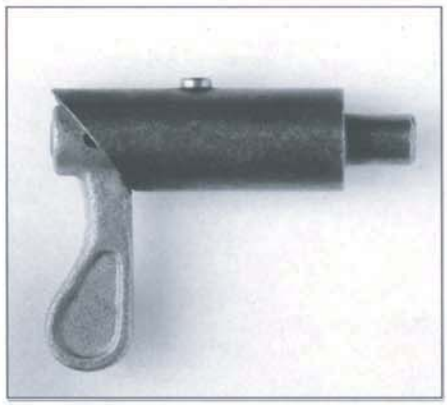

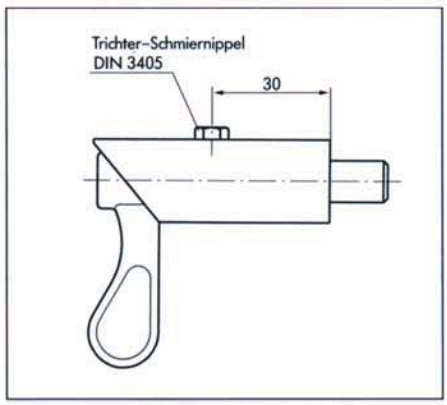

Typ S

Ø=D	Hub=L*	Bestell-Nr.
08	14	S 0814 TN
10	10	S 1010 TN
10	14	S 1014 TN
12	14	S 1214 TN
15	14	S 1514 TN

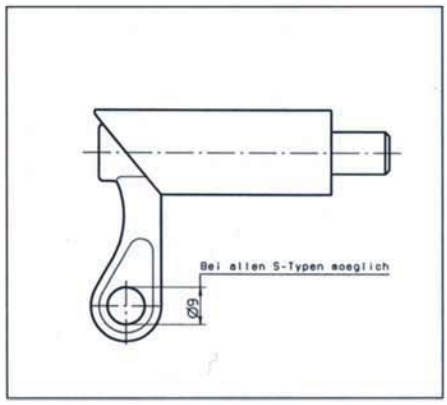

Schließriegel

Ø=D	Hub=L*	Bestell-Nr.
wie S-Typen		Bestell-Nr. S-Typ mit Anhang SR

Federriegel mit Bohrung im Knebel zum Anbringen eines Vorhängeschlosses

* Bolzenmaße in mm

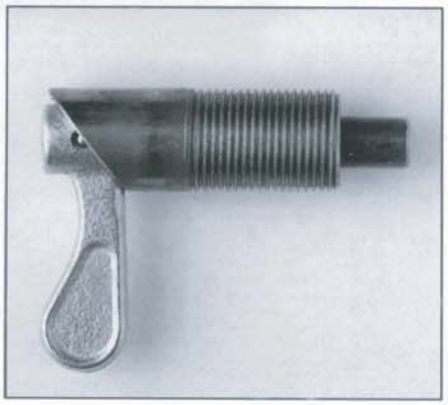

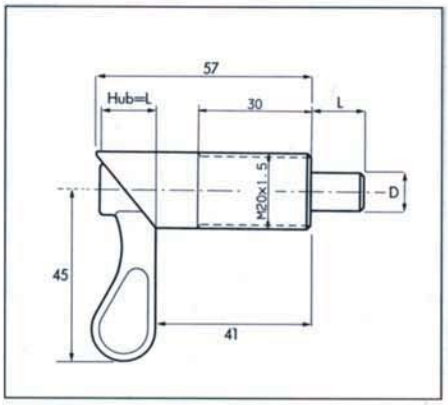

Typ SG

Ø=D	Hub=L*	Bestell-Nr.
08	14	SG 0814
10	10	SG 1010
10	14	SG 1014
12	14	SG 1214
15	14	SG 1514

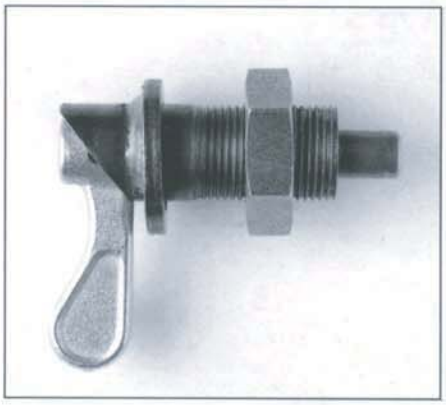

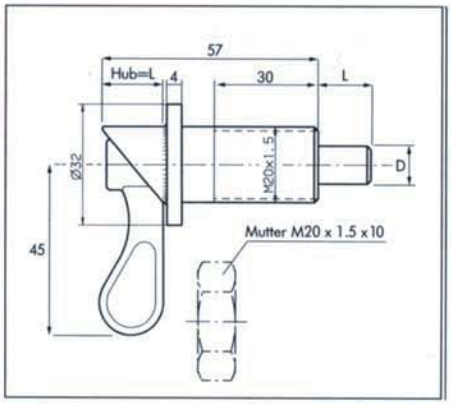

Typ SGS

Ø=D	Hub=L*	Bestell-Nr.
08	14	SGS 0814
10	10	SGS 1010
10	14	SGS 1014
12	14	SGS 1214
15	14	SGS 1514

Mutter M 20 x 1,5 auf Wunsch

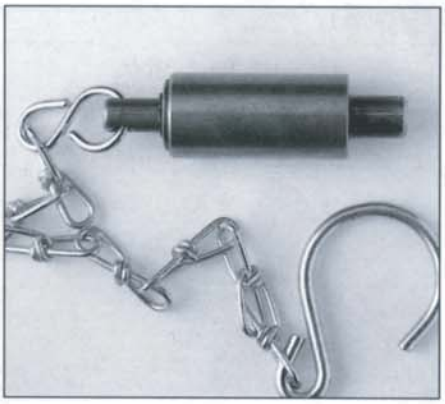

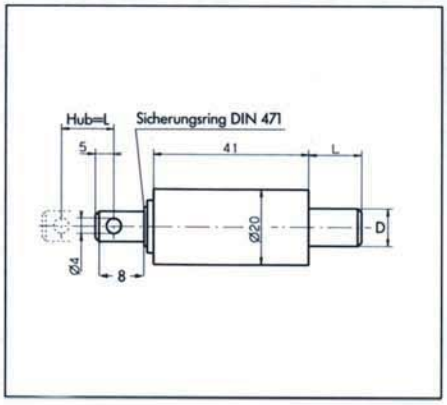

Typ SK

Ø=D	Hub=L*	Bestell-Nr.
08	14	SK 0814
10	10	SK 1010
10	14	SK 1014
12	14	SK 1214
15	14	SK 1514

SK-Typen auch lieferbar mit Hydraulikschmiernippel (DIN 71412) oder Trichterschmiernippel (DIN 3405).
Kette auf Wunsch

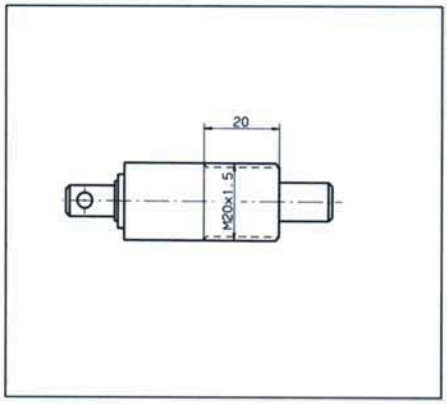

Typ SK

Ø=D	Hub=L*	Bestell-Nr.
08	14	SKG 0814
10	10	SKG 1010
10	14	SKG 1014
12	14	SKG 1214
15	14	SKG 1514

Hülse mit Feingewinde M 20 x 1,5

* Bolzenmaße in mm

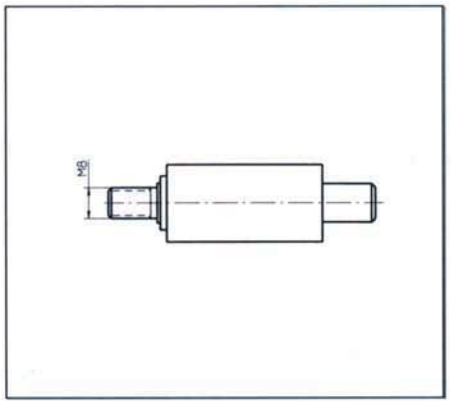

Typ SK

Ø=D	Hub=L*	Bestell-Nr.
08	14	SK 0814 M8
10	10	SK 1010 M8
10	14	SK 1014 M8
12	14	SK 1214 M8
15	14	SK 1514 M8

Bolzenende mit Gewinde M 8

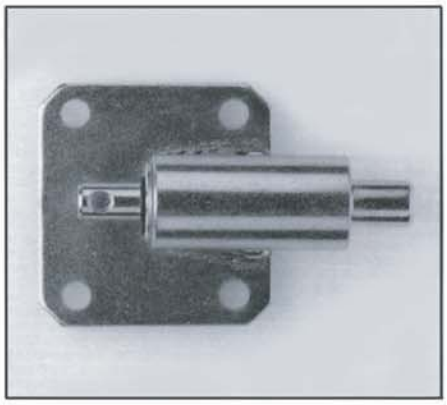

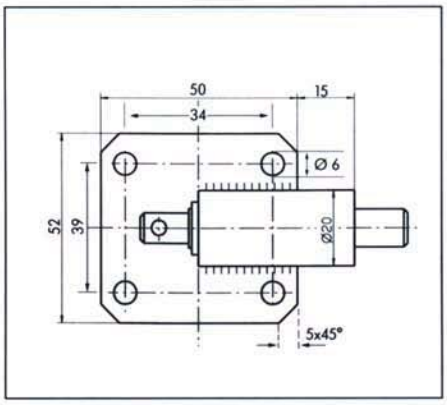

Typ SK

Ø=D	Hub=L*	Bestell-Nr.
08	14	SK 0814 SAPL
10	10	SK 1010 SAPL
10	14	SK 1014 SAPL
12	14	SK 1214 SAPL
15	14	SK 1514 SAPL

Plattenstärke 2 mm

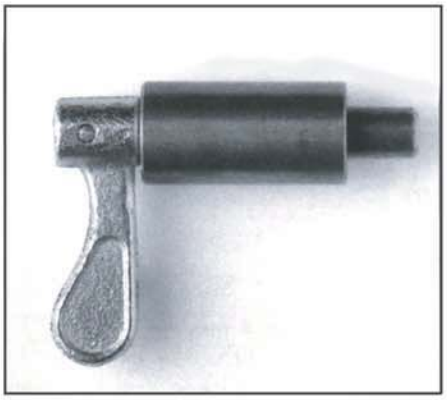

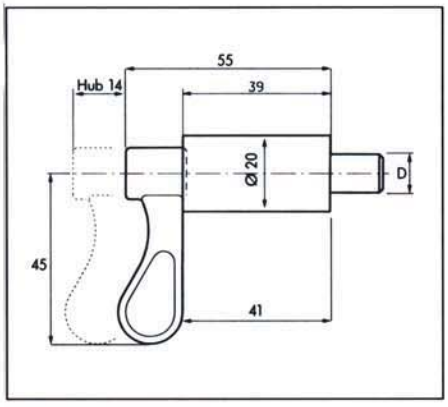

Typ SX

Ø=D	Hub=L*	Bestell-Nr.
08	14	SX 0814
10	10	SX 1010
10	14	SX 1014
12	14	SX 1214
15	14	SX 1514

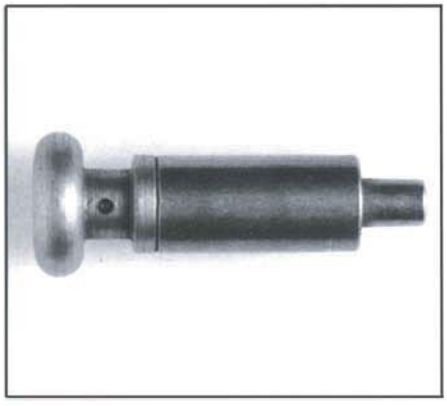

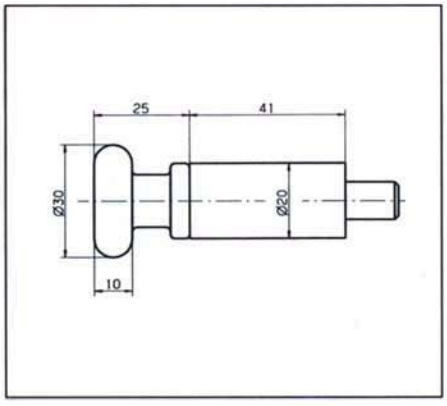

Typ SK mit Knopf

Ø=D	Hub=L*	Bestell-Nr.
08	14	SK 0814 Knopf
10	10	SK 1010 Knopf
10	14	SK 1014 Knopf
12	14	SK 1214 Knopf
15	14	SK 1514 Knopf

* Bolzenmaße in mm

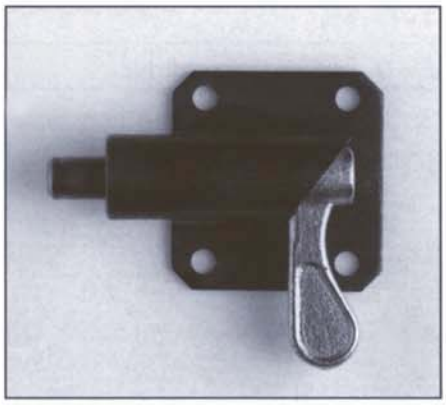

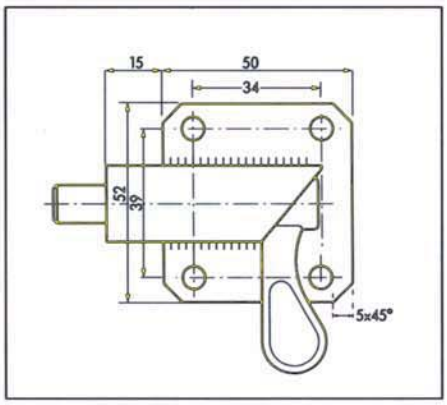

Typ SA

Ø=D	Hub=L*	Bestell-Nr.
08	14	SA 0814 R oder L
10	10	SA 1010 R oder L
10	14	SA 1014 R oder L
12	14	SA 1214 R oder L
15	14	SA 1514 R oder L

Alle SA-Platten 2 mm dick
Knebel rechts (R, Abb.) oder links (L)
Hülsenüberstand 15 mm

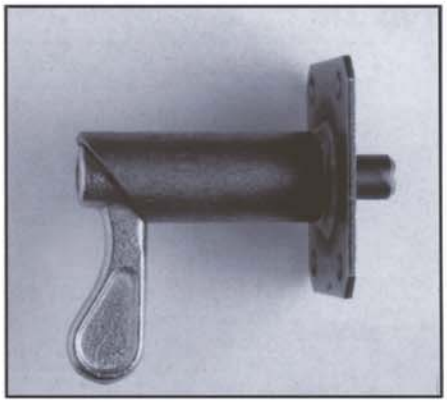

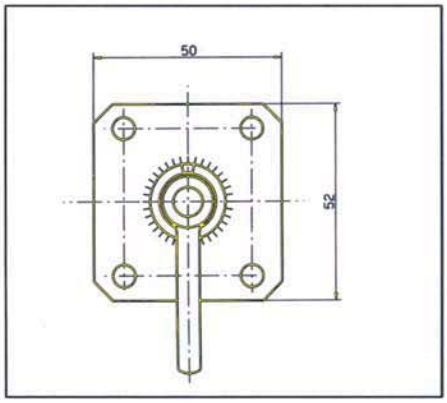

Typ SAZ

Ø=D	Hub=L*	Bestell-Nr.
08	14	SAZ 0814
10	10	SAZ 1010
10	14	SAZ 1014
12	14	SAZ 1214
15	14	SAZ 1514

* Bolzenmaße in mm

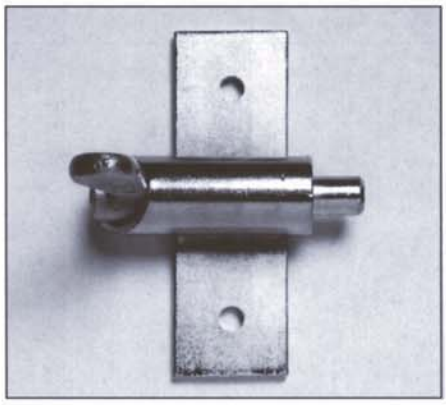

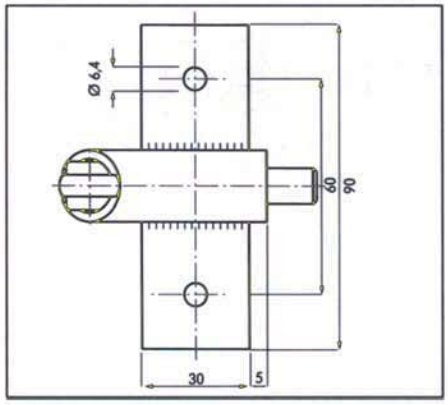

Typ SB

Ø=D	Hub=L*	Bestell-Nr.
08	14	SB 0814
10	10	SB 1010
10	14	SB 1014
12	14	SB 1214
15	14	SB 1514

Alle SB-Platten 4 mm dick
Knebel senkrecht
Hülsenüberstand nach Kundenwunsch

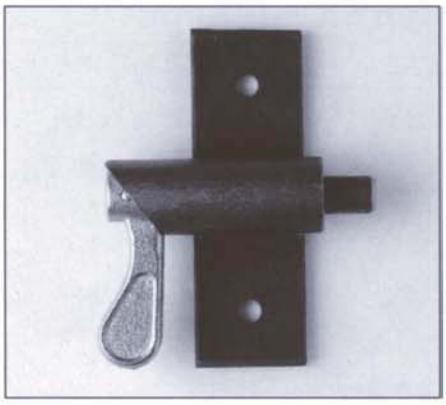

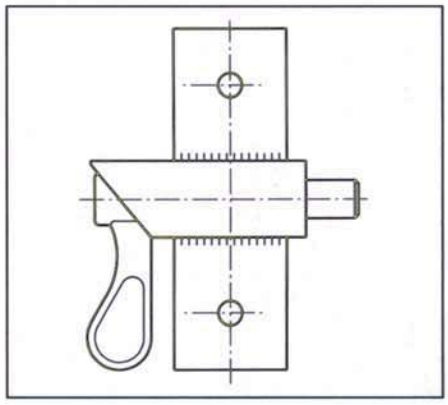

Typ SB

Ø=D	Hub=L*	Bestell-Nr.
08	14	SB 0814 R oder L
10	10	SB 1010 R oder L
10	14	SB 1014 R oder L
12	14	SB 1214 R oder L
15	14	SB 1514 R oder L

Knebel rechts (R) oder links (L)
(Abbildung Knebel links)
Hülsenüberstand nach Kundenwunsch

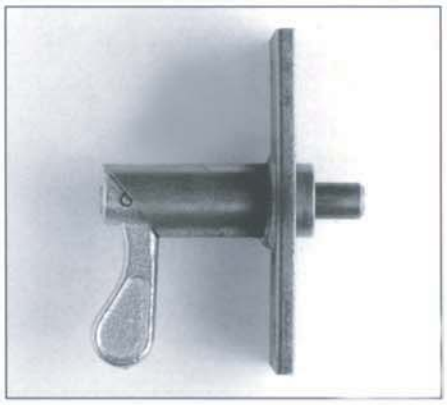

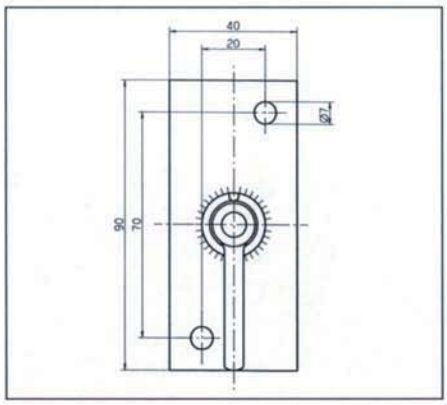

Typ SCZ

Ø=D	Hub=L*	Bestell-Nr.
08	14	SCZ 0814 S
10	10	SCZ 1010 S
10	14	SCZ 1014 S
12	14	SCZ 1214 S
15	14	SCZ 1514 S

Plattenstärke 5 mm, Knebel senkrecht
Hülsenüberstand 5 mm
oder nach Kundenwunsch 0-35 mm

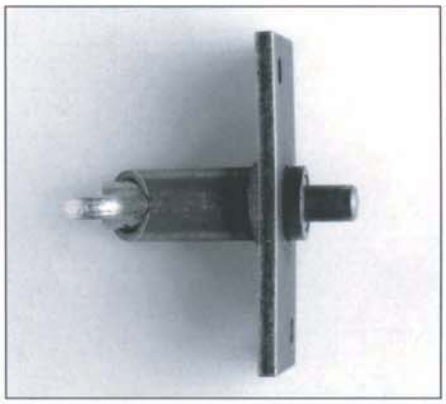

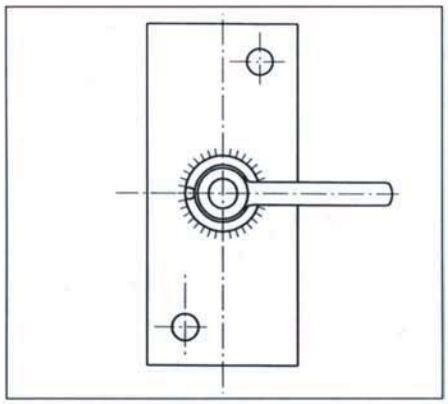

Typ SCZ

Ø=D	Hub=L*	Bestell-Nr.
08	14	SCZ 0814 W
10	10	SCZ 1010 W
10	14	SCZ 1014 W
12	14	SCZ 1214 W
15	14	SCZ 1514 W

Plattenstärke 5 mm, Knebel waagrecht
Hülsenüberstand 5 mm
oder nach Kundenwunsch 0-35 mm

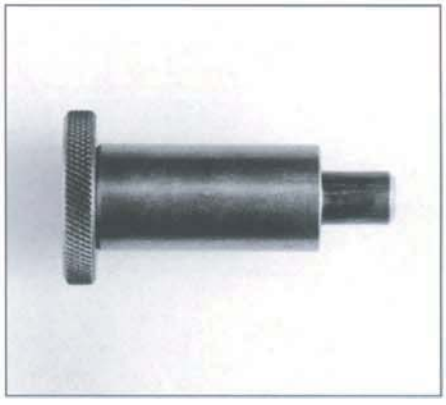

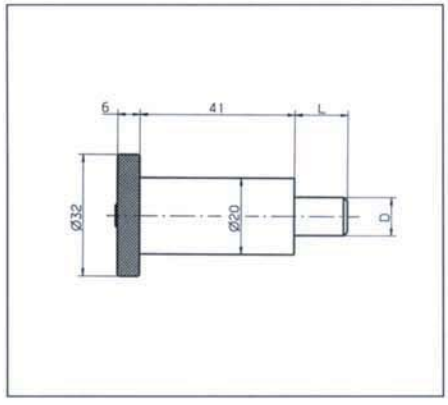

Typ SF

Ø=D	Hub=L*	Bestell-Nr.
08	14	SF 0814
10	10	SF 1010
10	14	SF 1014
12	14	SF 1214
15	14	SF 1514

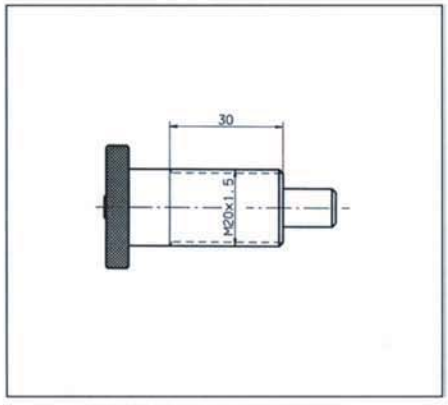

Typ SFG

Ø=D	Hub=L*	Bestell-Nr.
08	14	SFG 0814
10	10	SFG 1010
10	14	SFG 1014
12	14	SFG 1214
15	14	SFG 1514

*Bolzenmaße in mm

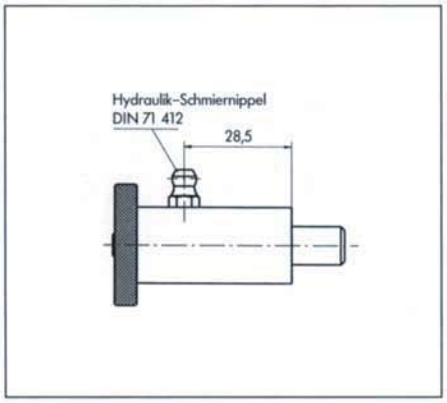

Typ SF

Ø=D	Hub=L*	Bestell-Nr.
08	14	SF 0814 HN
10	10	SF 1010 HN
10	14	SF 1014 HN
12	14	SF 1214 HN
15	14	SF 1514 HN

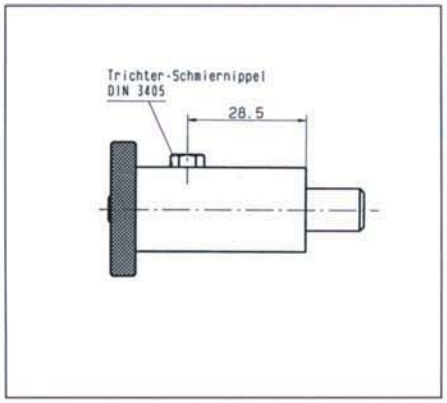

Typ SF

Ø=D	Hub=L*	Bestell-Nr..
08	14	SF 0814 TN
10	10	SF 1010 TN
10	14	SF 1014 TN
12	14	SF 1214 TN
15	14	SF 1514 TN

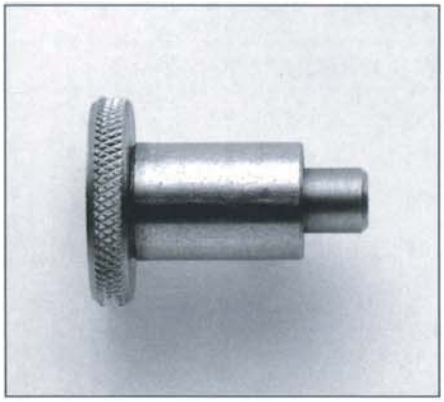

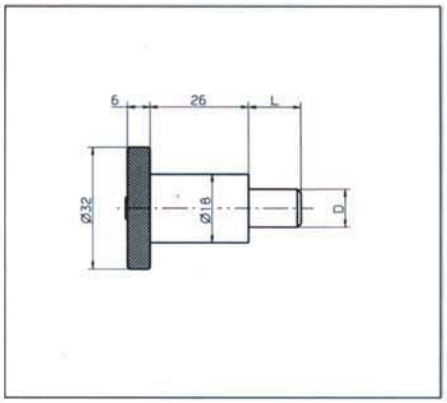

Typ F

Ø=D	Hub=L*	Bestell-Nr.
08	06	F 0086
08	10	F 0810
10	10	F 1010
12	10	F 1210

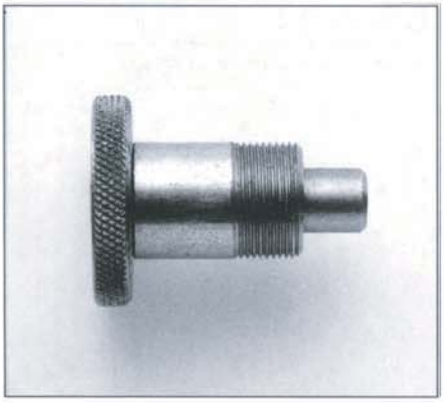

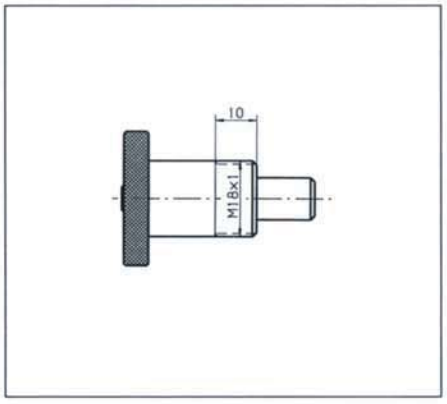

Typ FG

Ø=D	Hub=L*	Bestell-Nr.
08	06	FG 0086
08	10	FG 0810
10	10	FG 1010
12	10	FG 1210

FG 86 HN – FG 1210 HN und
FG 86 TN – FG 1210 TN
ohne Abbildung
* Bolzenmaße in mm

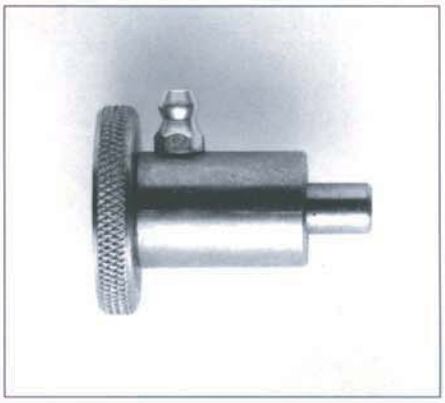

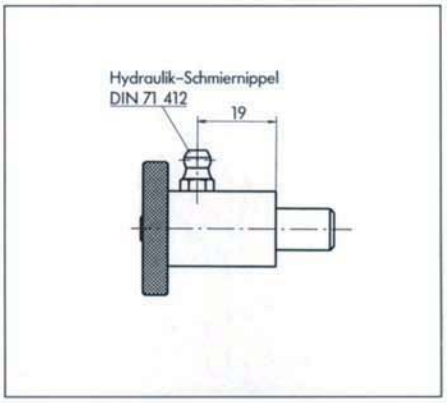

Typ F

Ø=D	Hub=L*	Bestell-Nr.
08	06	F 0086 HN
08	10	F 0810 HN
10	10	F 1010 HN
12	10	F 1210 HN

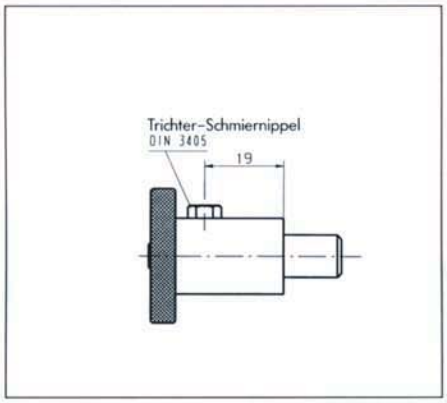

Typ F

Ø=D	Hub=L*	Bestell-Nr.
08	06	F 0086 TN
08	10	F 0810 TN
10	10	F 1010 TN
12	10	F 1210 TN

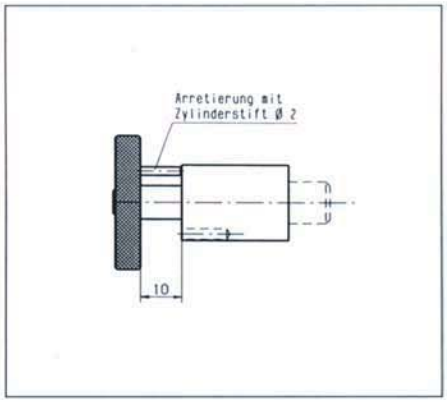

Typ F mit Arretierstift

Ø=D	Hub=L*	Bestell-Nr.
08	06	F 0086 Arr
08	10	F 0810 Arr
10	10	F 1010 Arr
12	10	F 1210 Arr

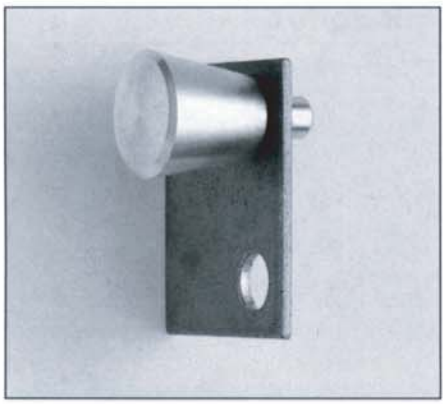

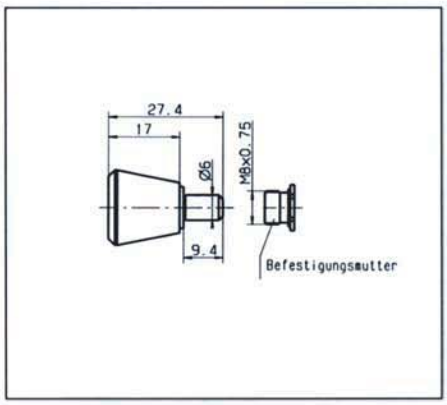

Typ FM

Ø=D	Hub=L*	Bestell-Nr.
06	06	FM 0066

Knopf aus Aluminium
Bolzen und Verschraubung
aus Stahl

* Bolzenmaße in mm

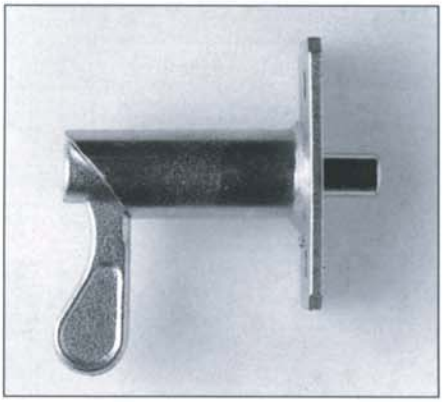

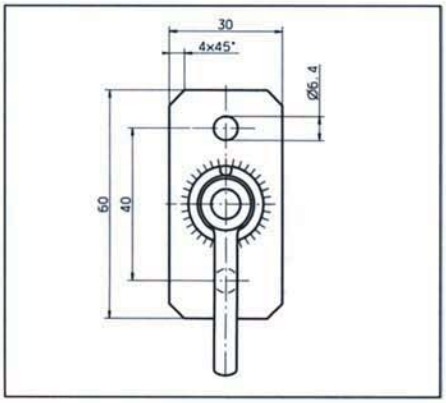

mit Sonderbefestigungen

Ø=D	Hub=L*	Bestell-Nr.
08	14	S 0814SP 30x3x60
10	10	S 1010SP 30x3x60
10	14	S 1014SP 30x3x60
12	14	S 1214SP 30x3x60
15	14	S 1514SP 30x3x60

Platte 30 x 3 x 60 mm
Knebel senkrecht
Hülsenüberstand 0-38 mm

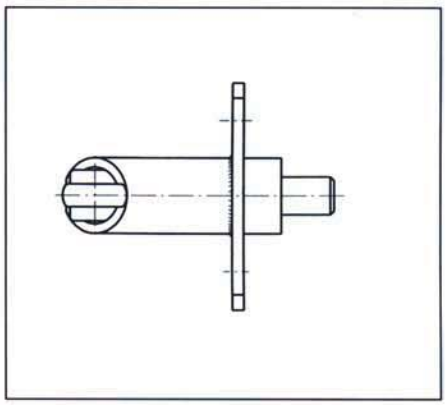

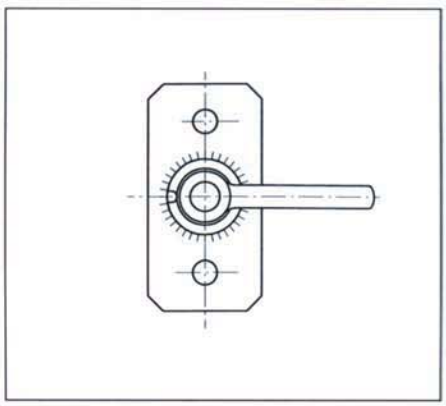

mit Sonderbefestigungen

Ø=D	Hub=L*	Bestell-Nr.
08	14	S 0814WP 30x3x60
10	10	S 1010WP 30x3x60
10	14	S 1014WP 30x3x60
12	14	S 1214WP 30x3x60
15	14	S 1514WP 30x3x60

Platte 30 x 3 x 60 mm
Knebel waagrecht, rechts (Abb.) oder links, Hülsenüberstand 0-38 mm

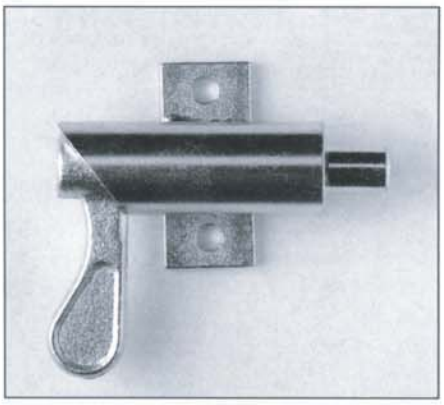

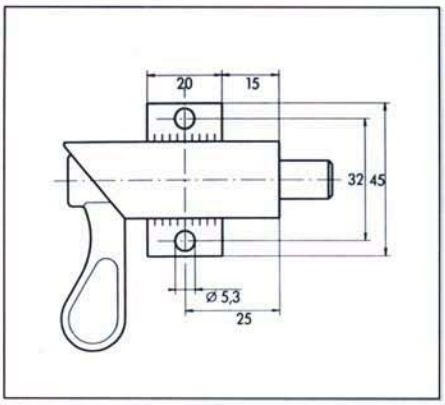

mit Sonderbefestigungen

Ø=D	Hub=L*	Bestell-Nr.
08	14	S 0814RP 20x3x45
10	10	S 1010RP 20x3x45
10	14	S 1014RP 20x3x45
12	14	S 1214RP 20x3x45
15	14	S 1514RP 20x3x45

Platte 20 x 3 x 45 mm. Knebel rechts oder links (Abb.), Hülsenüberstand 15 mm oder nach Kundenwunsch

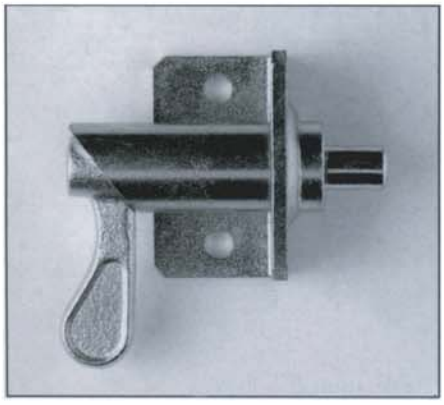

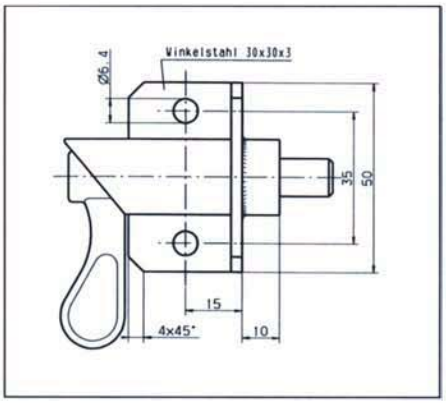

mit Sonderbefestigungen

Ø=D	Hub=L*	Bestell-Nr.
08	14	S 0814W30x30x3x50
10	10	S 1010W30x30x3x50
10	14	S 1014W30x30x3x50
12	14	S 1214W30x30x3x50
15	14	S 1514W30x30x3x50

W= Winkel. Andere Plattenformen und Plattenstärken auf Anfrage
Knebel senkrecht, Hülse mittig

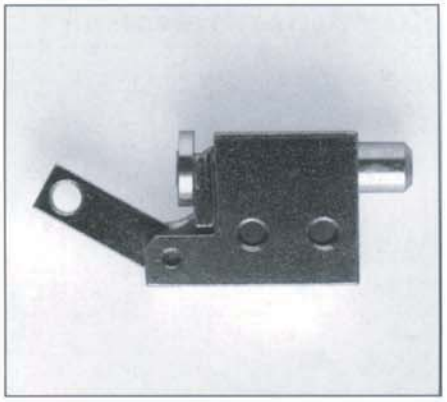

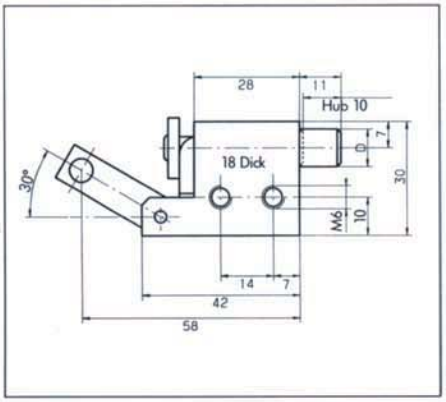

Typ R

Ø=D	Hub=L*	Bestell-Nr.
10	10	R 101045 G

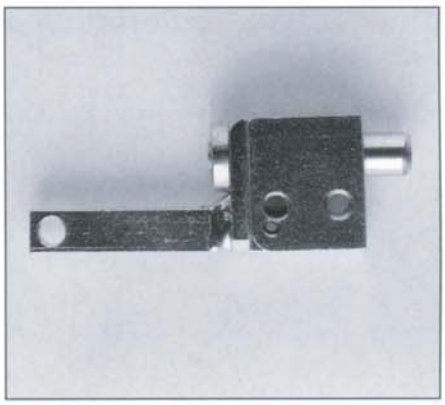

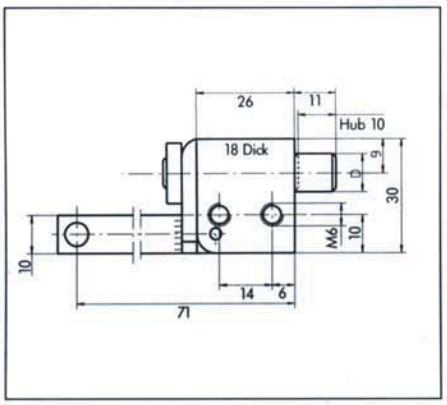

Typ R

Ø=D	Hub=L*	Bestell-Nr.
10	10	R 101090 G

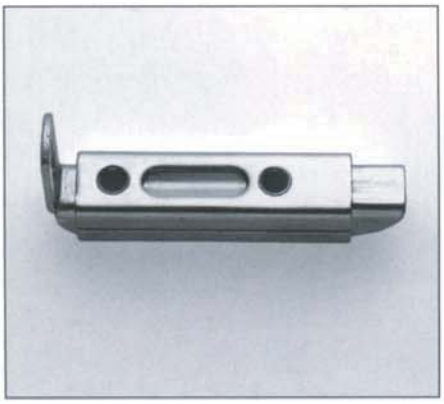

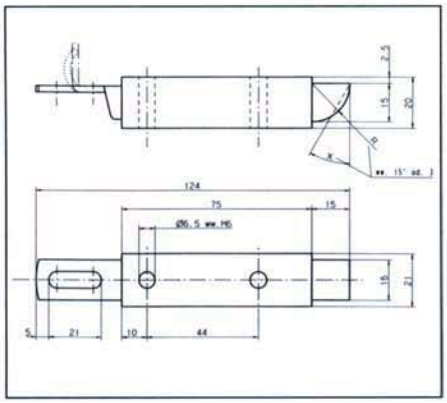

Typ R

Ø=D	Hub=L*	Bestell-Nr.
16	15	R 1615

In Sonderausführungen:

- Mit Gewinde M6 (statt Bohrung Ø 6,5)
- Mit rechtwinkelig abgebogener Zuglasche
- x mit 15° oder 30° Schräge

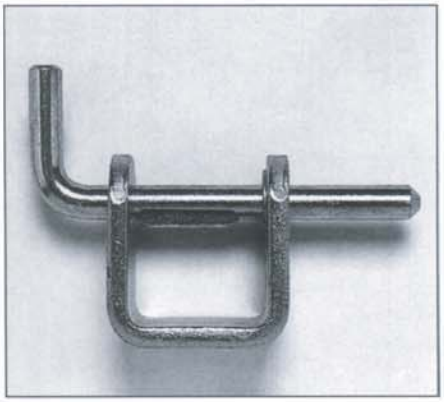

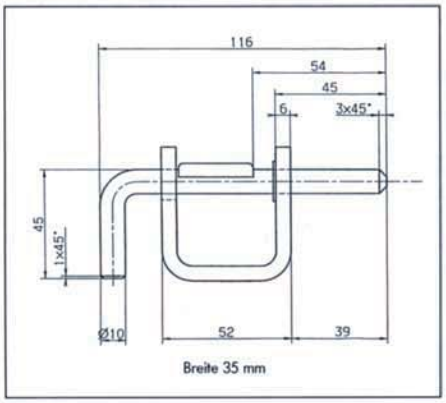

Schieberiegel

Ø=D	Hub=L*	Bestell-Nr.
10	39	SCHR 10
14	39	SCHR 14

Oberfläche verzinkt

* Bolzenmaße in mm

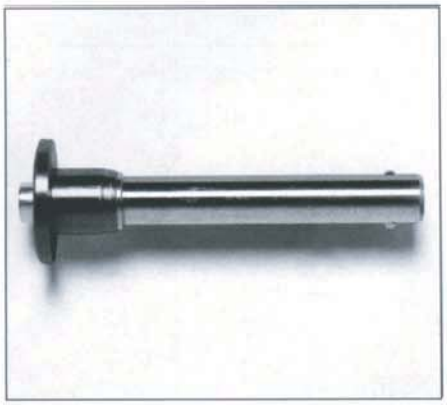

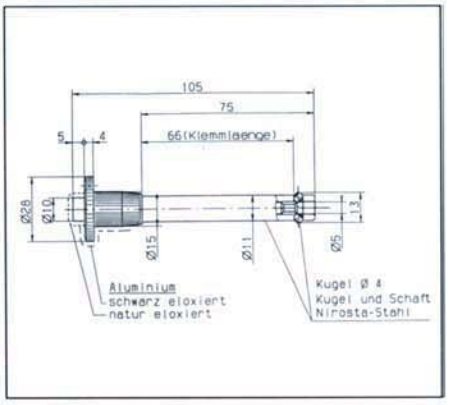

Kugelsperrbolzen

Klemmlänge	Bestell-Nr.
66 mm	K 66
91 mm	K 91

Mindestabnahme 200 Stück

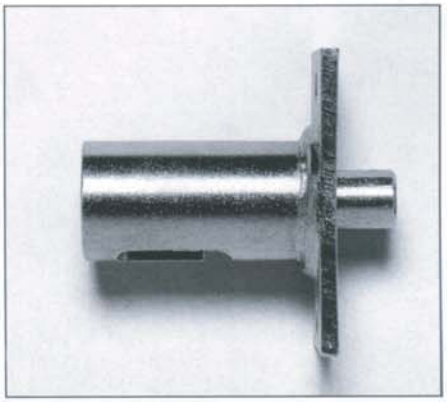

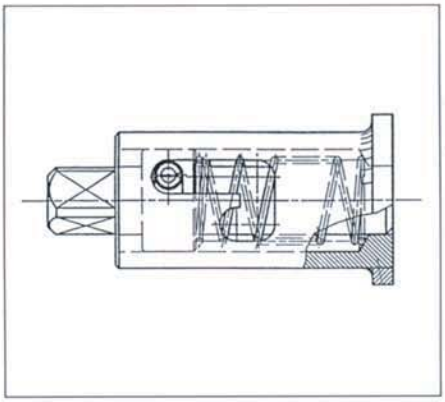

Federriegel für Betätigung mit Norm-Steckschlüssel

Ø=D	Hub=L*	Bestell-Nr.
10	10	SKZV 1010
10	14	SKZV 1014

Platte 50 x 25 x 2 mm
wahlweise für 3- oder 4-Kantschlüssel

* Bolzenmaße in mm

Sonderbolzen für S-Typen

1

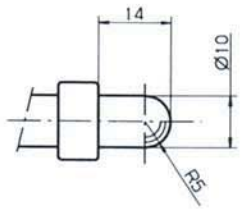

2

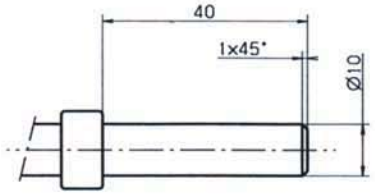

3

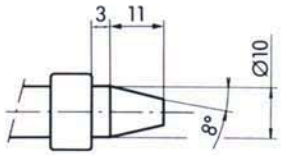

Technische Daten Federriegel:

Bolzendruck: 30 N/Stand. 50 N/70 N
Zugfestigkeit Bolzen: 37 kg/mm^2

Werkstoffe:

- Stahl, schweißbar, Knebel verzinkt
- Edelstahl DIN 1.4305 (auf Anfrage)
- Aluminium (auf Anfrage)

Möglicher Oberflächenschutz:

- verzinkt (Zusatz vz bei Bestell-Nr.)
- vernickelt (auf Anfrage)
- verchromt (auf Anfrage)

Liefermöglichkeiten:

- komplett montiert
- Bolzen und Knebel mit Kerbstift 3x12 verstiftet, Einzelteile
- Bolzen und Knebel verbohrt, Einzelteile
- Einzelteile komplett