Plastični tečaji PA - PP - ABS - PVC
Plastic Hinges PA - PP - ABS - PVS

METALIKA KACIN

Slovenija
(+386) 04 510 53 60
info@metalika-kacin.com
Hrvatska
(+385) 051 213 060
hrvatska@metalika-kacin.com
Srbija
(+381) 011 25 21 756
srbija@metalika-kacin.com

Guidelines for the correct application of plastic hinges

Materials of different type are used in accordance with the different structure and functionality of the hinges:
- High-resilience elastomer based technopolymer.
- Glass-fibre reinforced polyamide based or acetal based technopolymer.
- High-rigidity SUPER-technopolymer.

Resistance tests: two values are supplied for each product code:
- **Maximum working load (Ea, Er, E90)** is the value under which any elastic deformation that may occur is not permanent thus ensuring the hinge functionality.
- **Load at breakage (Ra, Rr, R90)** above which the plastic material can break.

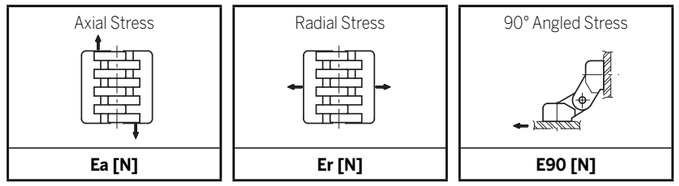

For materials with high rigidity (SUPER-technopolymer) which are not significantly deformed even with loads very close to loads at breakage, only the max limit static load is given (Sa, Sr, S90). Therefore, the technical designer, when calculating the admissible load, will have to use a suitable factor according to the importance and the safety level of the specific situation.

All the values shown in the tables **(Ea, Er, E90 e Sa, Sr, S90)** are the result of tests for the corresponding stresses carried out in our laboratories under controlled temperature and humidity (23° C - 50% R.H.) under given conditions of use and for a limited period of time.
When assessing the safety factor to apply, the technical designer shall take into consideration the actual conditions of use if they are different from the laboratory ones.
In order to help the technical designer to choose the right hinge and check its suitability to the specific application, we suggest asking for test samples and submitting the chosen product to tests in order to check its suitability.

The methods for calculating and interpreting the resistance values described in this catalogue have been updated in accordance with the latest improvements achieved.

Hinges CFN. and CFO. series: **E90** stress is not applicable, due to their geometry and structure.
CFSQ. and CFSW. hinges with built-in safety switch: being safety devices with specific properties, they require a specific argumentation which is illustrated in the product datasheet.

LOAD SUITABILITY CHECK
Hinged door on a vertical axis

P = weight of the door [Newton]
P1 = additional extra load [Newton]
W = width of the door
D = distance [metres] between the centre of gravity of the door and the hinge axis. In normal conditions D = W/2
D1 = distance [metres] between the hinge axis and the additional extra load application point
N = number of hinges
dT = sum of the distances in metres of all the hinges from the hinge of reference (dT = d1+d2+...+dn).
In case of only two hinges assembled, dT is simply the distance between them.
The three conditions must be satisfied.

$$\frac{(P+P1)}{N} \leq Ea$$

$$\frac{[(P \cdot D) + (P1 \cdot D1)]}{dT} \leq Er \text{ (closed door)}$$

$$\frac{[(P \cdot D) + (P1 \cdot D1)]}{dT} \leq E90 \text{ (90° open door°)}$$

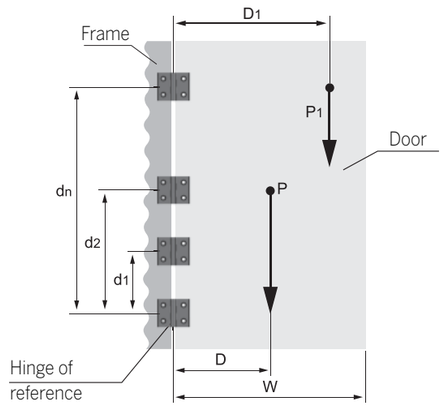

Suggestions for a correct assembly
The correct assembly of the hinges requires a drilling on the mounting wall with diameter not wider than 0.5 mm of the diameter of the assembling screw in order to leave the least clearance possible. The suggested tightening torque should not be exceeded.

EXAMPLE

P = 10 Kg = **98 N** (10•9.81) weight of the door
P1 = 2 Kg = **20 N** (2•9.81) weight of the additional extra load applied (for example: handle, lock, machine control panel fitted onto the door)
W = 1 m width of the door
D = W/2 = 1/2 = **0.5 m** distance between the centre of gravity of the door and the hinge axis
D1 = **0.90 m** distance between the hinge axis and the additional extra load application point
N = **2** (evaluating use of two hinges)
dT = **1.3 m** (in this case it is simply the distance between the two hinges)

$$\frac{(P+P1)}{N} = \frac{(98+20)}{2} = 59N \leq Ea$$

$$\frac{[(P \cdot D) + (P1 \cdot D1)]}{d_T} = \frac{[(98 \cdot 0.5) + (20 \cdot 0.9)]}{1.3} = 51N \leq Er$$

$$\frac{[(P \cdot D) + (P1 \cdot D1)]}{dT} = \frac{[(98 \cdot 0.5) + (20 \cdot 0.9)]}{1.3} = 51N \leq E90$$

The suitable hinge can be chosen among those which present Ea, Er, E90 values higher than the calculated ones.
Take CFD., series for example, the suitable hinges are CFD.30 B-M3 and CFD.30 CH-B-M3, CFD.40 B-M4, CFD.40 CH-4-B-M4 and CFD.40 CH-4-p-M4x18, all CFD.48 and CFD.66.

Hinges CFD series satisfying the three conditions indicated in the example above.

Resistance tests		Axial stress		Radial stress		90° Angled Stress	
		Maximum working load	Load at breakage	Maximum working load	Load at breakage	Maximum working load	Load at breakage
Code	**Description**	**Ea [N]**	**Ra [N]**	**Er [N]**	**Rr [N]**	**E90 [N]**	**R90 [N]**
422711	CFD.30 B-M3	60	690	70	490	60	500
422721	CFD.30 p-M3x13	70	750	40	340	30	390
422731	CFD.30 p-M3x13-B-M3	60	690	40	340	30	390
422741	CFD.30 B-M3-p-M3x13	60	690	40	340	30	390
422751	CFD.30 CH-3-B-M3	100	830	110	720	70	670
422761	CFD.30 CH-3-p-M3x13	60	730	50	450	30	350
422811	CFD.40 B-M4	160	1710	150	1340	100	700
422821	CFD.40 p-M4x18	110	1230	140	880	50	730
422831	CFD.40 p-M4x18-B-M4	110	1230	140	880	50	700
422841	CFD.40 B-M4-p-M4x18	110	1230	140	880	50	700
422851	CFD.40 CH-4-B-M4	120	162	150	1220	130	1110
422861	CFD.40 CH-4-p-M4x18	150	1480	140	820	100	860
422911	CFD.48 B-M5	260	2440	260	1700	120	1640
422921	CFD.48 p-M5x17	290	1770	240	1840	110	1740
422931	CFD.48 p-M5x17-B-M5	260	1770	240	1700	110	1640
422941	CFD.48 B-M5-p-M5x17	260	1770	240	1700	110	1640
422951	CFD.48 CH-5-B-M5	330	2530	240	1890	290	1870
422961	CFD.48 CH-5-p-M5x17	150	2170	120	1200	110	970
423011	CFD.66 B-M6	450	4130	320	2520	220	2250
423021	CFD.66 p-M6x16	470	3260	260	1700	240	1580
423031	CFD.66 p-M6x16-B-M6	450	3260	260	1700	220	1580
423041	CFD.66 B-M6-p-M6x16	450	3260	260	1700	220	1580
423051	CFD.66 CH-6-B-M6	430	3660	410	2610	310	2830
423061	CFD.66 CH-6-p-M6x16	350	3090	280	1770	180	1610

www.METALIKA-KACIN.com
www.METALIKA-KACIN.com

Hinge PA, 74 x 60 Pr01 180°

[4-402]

Advantages

- For nested doors.
- Hinge visible.
- RH and LH version.
- 180°opening angle.
- Low weight.
- Corrosion resistant.
- Lift-off.

Materials

- **Hinge:** PA, black
- **Pin:** stainless steel

Remarks

1. = Fastening with countersunk screw M5

DIN 7991 or DIN ISO 10642 and DIN 965 or DIN ISO 7046

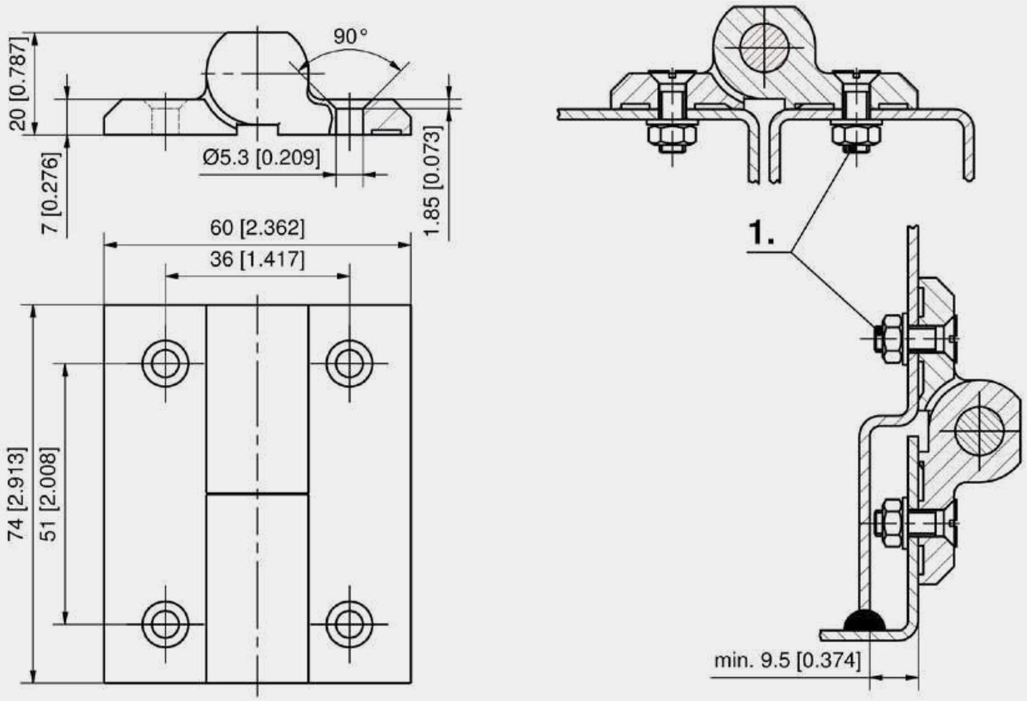

Hinge

Part Number	Version	Material pin	Installation type
218-9425.00-00000	RH	stainless steel	screw-on
218-9426.00-00000	LH	stainless steel	screw-on

Pin Hinge Pr02 120°

[4-393]

Advantages

- For nested doors.
- Hinge concealed.
- Small space requirement.
- 120° Opening angle.
- The spring loaded pin allows for an easy and quick installation and removal of the door.
- A simple clip-in fitting for cut-out differ.

Materials

- **Housing:** PA, black
- **Pin:** steel, zinc plated

a) and c)

- **Spring:** stainless steel

b)

- **Spring:** steel, zinc plated

Remarks

Door-cutout and frame-cutout differ.

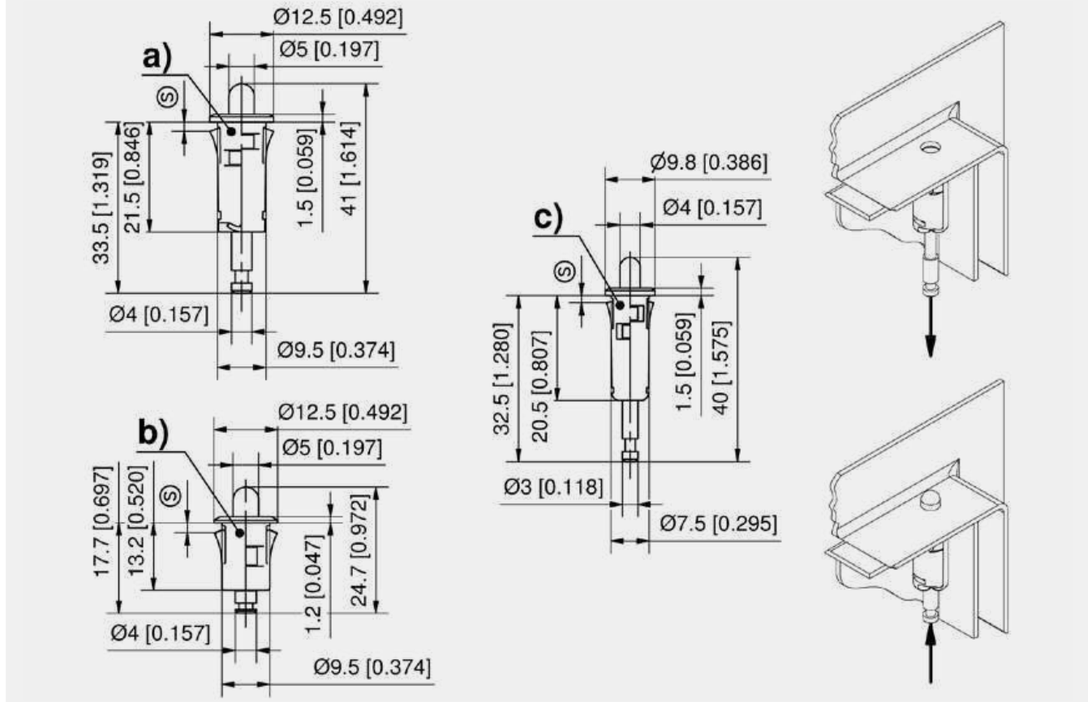

Pin Hinge

	Part Number	Clamping range	Material pin	Pin length L	Pin diameter	Installation type
c)	245-9301.00-00000	1.0 - 1.2 mm	steel, zinc plated	40 mm	4 mm	tool-less
b)	245-9304.07-07101	1.4 - 1.6 mm	steel, zinc plated	24.7 mm	5 mm	tool-less
a)	245-9303.00-00000	1.4 - 1.6 mm	steel, zinc plated	41 mm	5 mm	tool-less

Corner Hinge Pr04 180°

[4-280]

Advantages

- For surface mounted doors.
- Hinge visible.
- RH / LH application.
- 180° Opening angle.
- Lift-off.
- Using screws M5x15 will give electrical conductivity between frame and door.
- Plastic coated.
- Top and bottom part have a molded-in plate with 2 threaded holes M5. This construction makes the hinge very strong.
- Corrosion-resistant by stainless steel pin.

Materials

- **Hinge parts:** PA, black
- **Plate insert (fully molded-in):** steel, untreated
- **Pin:** stainless steel

Remarks

Screws and washers are **not** included.

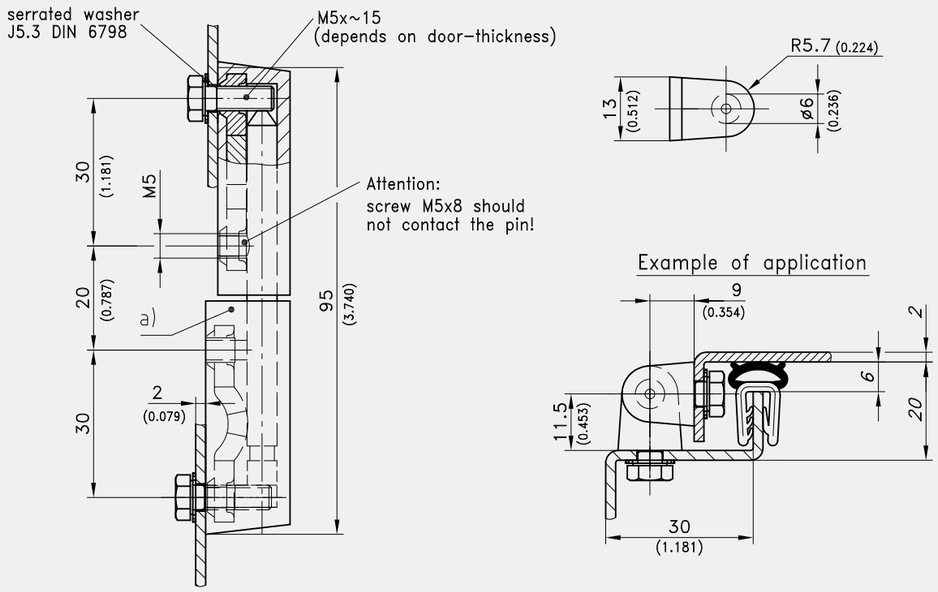

Corner Hinge

Part Number	Material pin	Pin version	Installation type
224-9001.00-00000	stainless steel	molded	screw-on

Hinges Hinges
www.METALIKA-KACIN.com www.METALIKA-KACIN.com

Hinge Pr05 180°

[4-145]

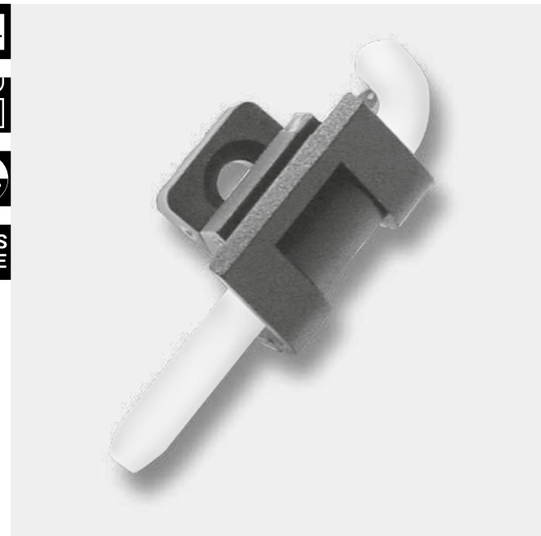

for single cabinet, door bending 16mm, for surface mounted door

Advantages

- 180° Polyamide hinge with self-locking pin used to control cabinet doors or machine flaps.
- RH or LH application.
- 180° Opening angle.

Materials

- **Frame-part and door-part**: PA, black
- **Pin:** POM natural

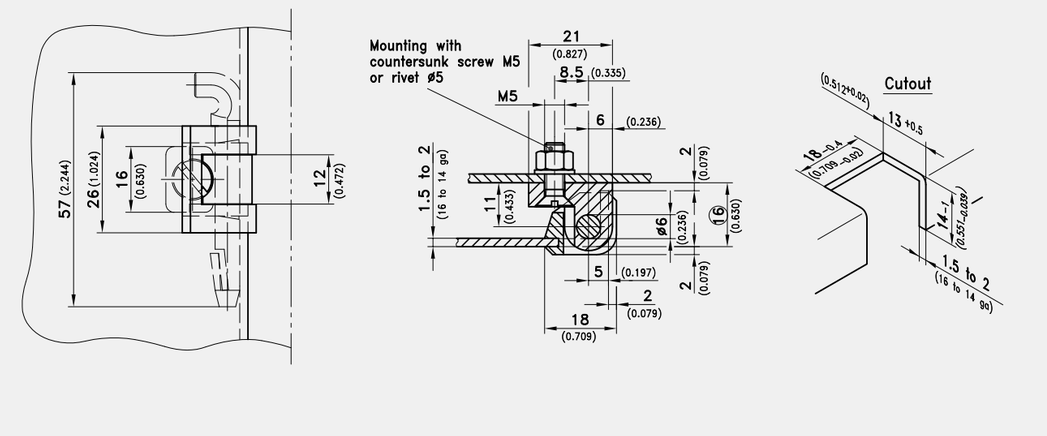

Hinge

Part Number	Material pin	Pin version	Installation type
212-9101.00-00000	POM	self-locking	screw-on

Torque Hinge Pr01 270°

[4-708]

Advantages

- 270° Hinge with unchanging torque throughout its full range of motion.
- Continuously adjustable torque 0-5Nm. The adjustment of the torque is made with a hexagon socket key size 4 in the hinge shaft.
- The doors may be moved into any position and remain at exactly that position.
- Also usable as coverstays for light duty application.
- Torque adjustable.
- Constant torque throughout its fully range of motion.
- RH and LH application.

Materials

- **Hinge and covers:** PA, black
- **Pin:** stainless steel

Remarks

Installation with hexagon screws or hexagon nuts M6.

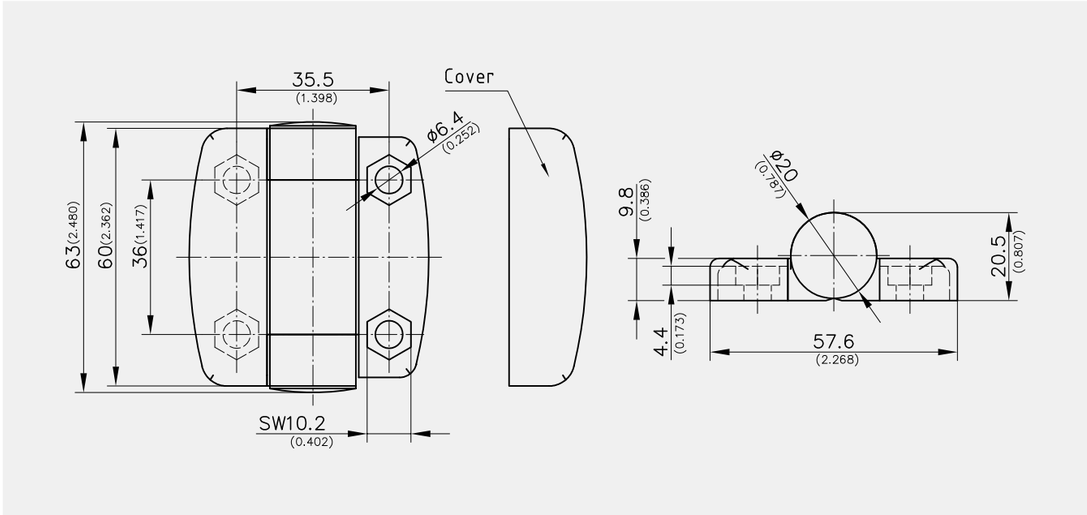

Torque Hinge

Part Number	NM (both directions)	Material pin	Installation type
703-9011.00-00000	0-5	stainless steel	screw-on

Torque Hinge Pr01 270°

[4-709]

Advantages

- 270° Hinge with unchanging torque throughout its full range of motion.
- Continuously adjustable torque 0-5Nm. The adjustment of the torque is made with a hexagon socket key size 4 in the hinge shaft.
- The doors may be moved into any position and remain at exactly that position.
- Also usable as coverstays for light duty application.
- Torque adjustable.
- Constant torque throughout its fully range of motion.
- RH and LH application.

Materials

- **Hinge and covers:** PA, black
- **Pin:** stainless steel

Remarks

Installation with hexagon screws or hexagon nuts M6.

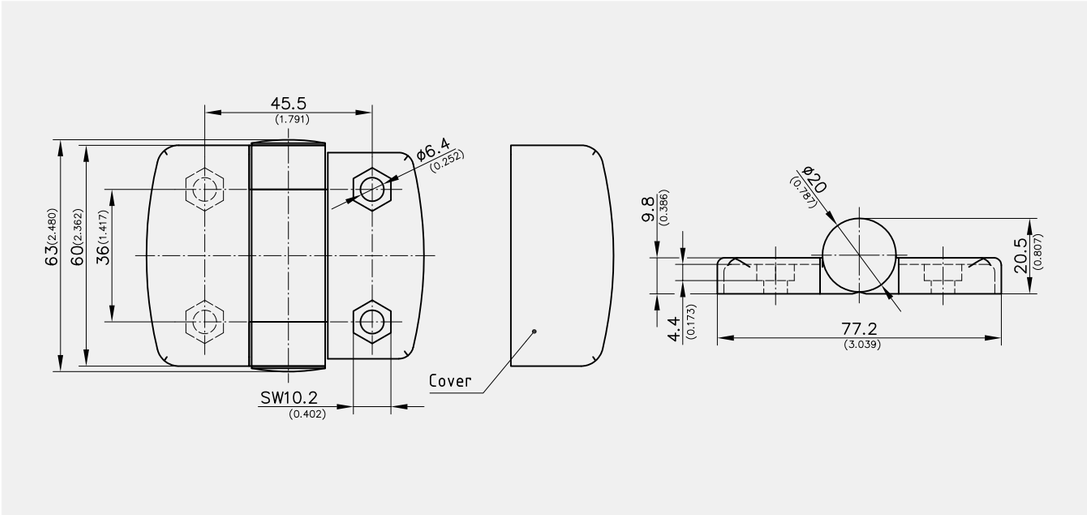

Torque Hinge

Part Number	NM (both directions)	Material pin	Pin version	Installation type
703-9012.00-00000	0-5	stainless steel	pressed in	screw-on

Torque Hinge Pr01 270°

[4-703]

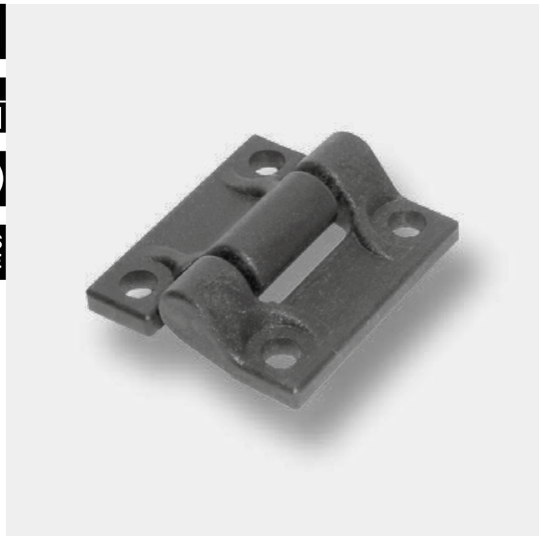

Advantages

- 270° Hinge with constant torque throughout its full range of motion.
- Without any engagement.
- Springback typically < 1°.
- Constant torque throughout its fully range of motion.
- Life of > 10.000 cycles.
- RH and LH application.
- Fastening: for example with M6 screws DIN-EN-ISO 4762.

Materials

- **Housing:** PA
- **Shaft and torque clips:** hardened steel

Remarks

Price and delivery time on request!

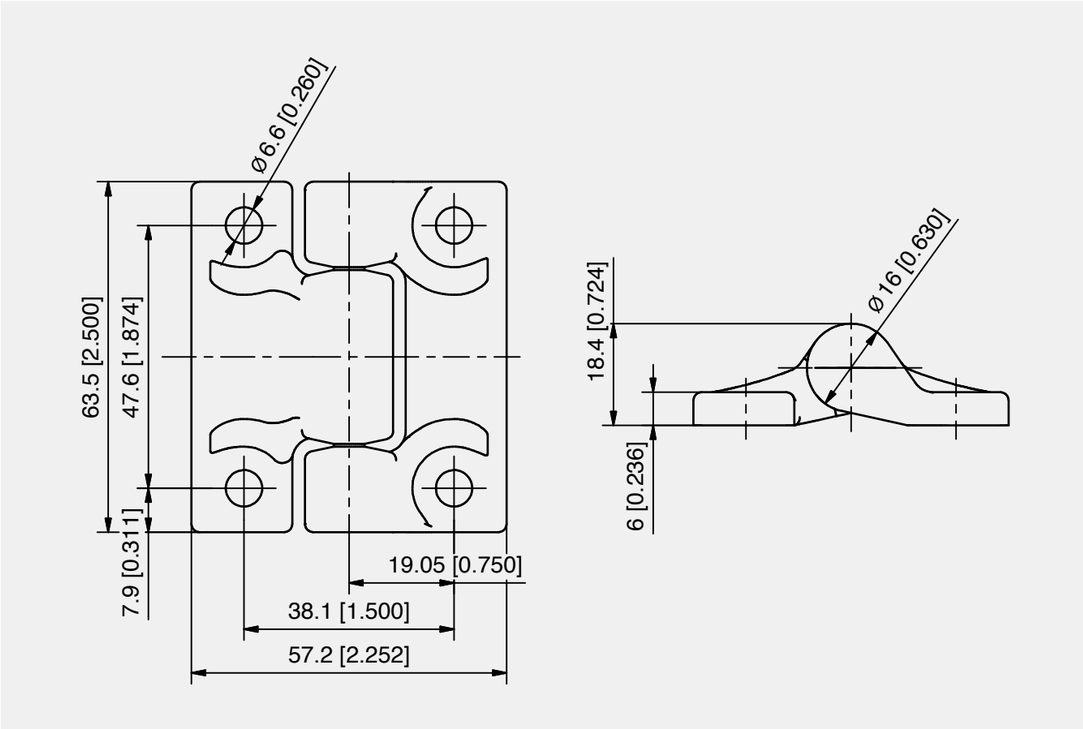

Torque Hinge

Part Number	NM (both directions)	Material pin	Installation type
703-9003.00-00140	1,38	steel hardened	screw-on
703-9003.00-00220	2,16	steel hardened	screw-on

Hinge PA, 60 x 40 Pr01 180°

[4-400]

Advantages

- For nested doors.
- Hinge visible.
- RH / LH application.
- 180° Opening angle.
- Captive pin protected against loosening and falling out.
- Tight tolerance in knuckles ensures proper alignment.
- 6-part knuckle pin assembly.
- Lightweight.
- Corrosion resistant.
- Rounded edges.

Materials

- **Hinge:** PA6, black **UL 94 V0 halogen free**

Remarks

Fitting by countersunk screws M6 x 16

according to DIN 7991

or DIN ISO 10642 and DIN 965

or DIN ISO 7046.

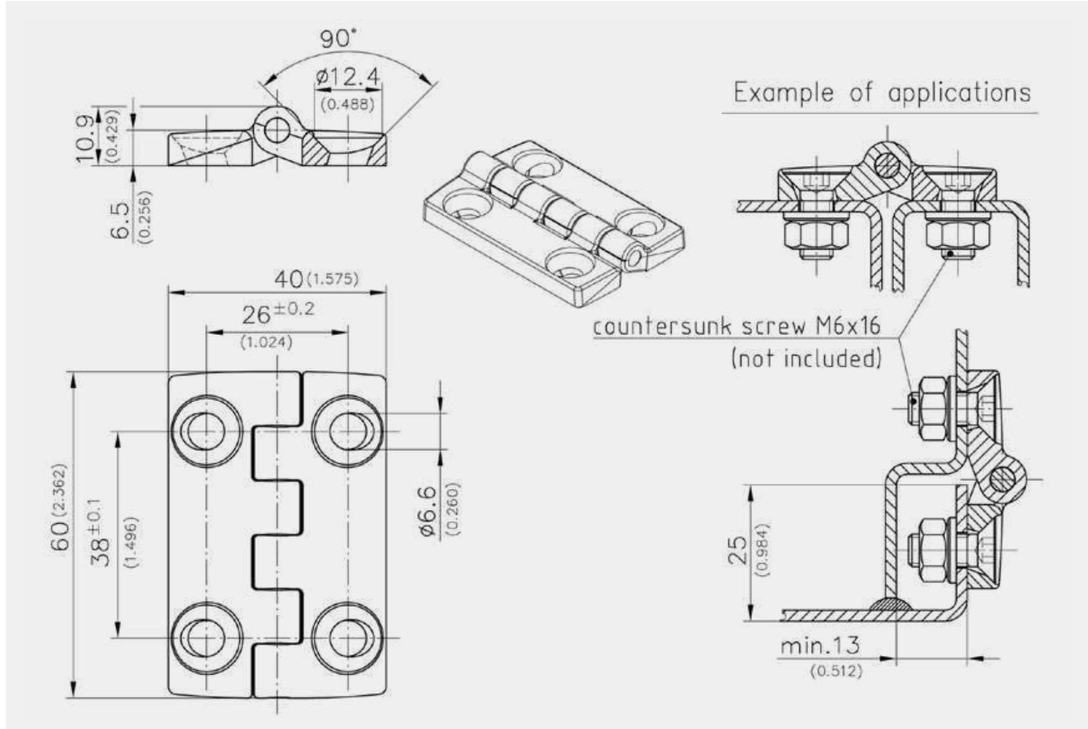

Hinge

Part Number	Material pin	Pin version	Installation type
218-9220.00-00000	PA	molded in	screw-on

Carbon Kevlar hinges - 36 mm width

NEW

270° POLYMER RoHS

Hinge is constructed of rigid leaves and a flex unit.
The rigid leaves are wowen carbon fibre in an epoxy matrix.
The Kevlar flex units are impregnated with a flexible urethane.
Design for bonding.
No metallic component. Ultra light, ultra thin.

	Part number	Material	Finish	A	B	C	Weight (g)
NEW	54-7-3600	carbon / Kevlar	black	50	36	0.8	2
NEW	54-7-3601	carbon / Kevlar	black	100	36	0.8	3

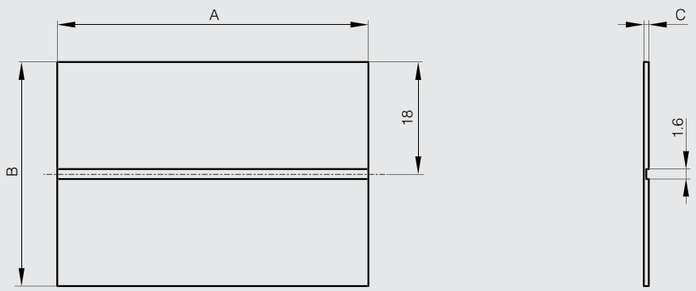

Carbon Kevlar hinges - 50 mm width

NEW

270° POLYMER RoHS

Hinge is constructed of rigid leaves and a flex unit.
The rigid leaves are wowen carbon fibre in an epoxy matrix.
The Kevlar flex units are impregnated with a flexible urethane.
Design for bond or screws assembly.
Part number 54-7-3602 tested to over one million cycles through an 80° arc.
No metallic component. Ultra light, ultra thin.

	Part number	Material	Finish	A	B	C	Weight (g)
NEW	54-7-3602	carbon / Kevlar	black	50	50	1.5	4
NEW	54-7-3603	carbon / Kevlar	black	100	50	1.5	9
NEW	54-7-3604	carbon / Kevlar	black	600	50	1.5	51

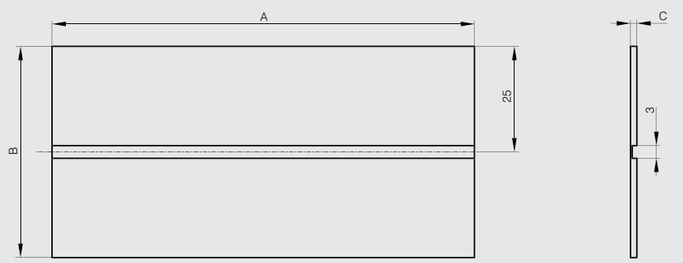

www.METALIKA-KACIN.com

Carbon Kevlar hinges with glass fiber - 50 mm width

NEW

270° POLYMER RoHS

Hinge is constructed of rigid leaves and a flex unit.
The rigid leaves are a glass fibre carbon hybrid.
The Kevlar flex units are impregnated with a flexible urethane.
Design for bond or screws assembly.
No metallic component. Ultra light, ultra thin.

	Part number	Material	Finish	A	B	C	Weight (g)
NEW	54-7-3605	carbon / glass fibre / Kevlar	black	50	50	2.5	8
NEW	54-7-3606	carbon / glass fibre / Kevlar	black	100	50	2.5	16

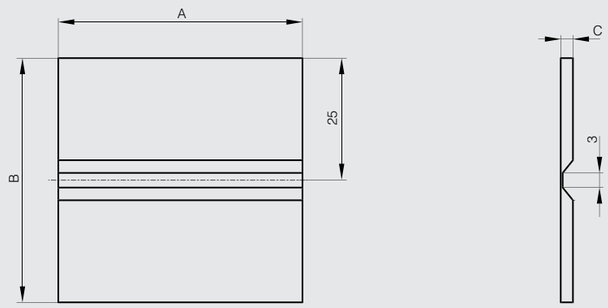

www.METALIKA-KACIN.com

Square design hinges with countersunk holes

Hinges are made of 30% GF polyamide, pins are in 304 stainless steel.
UL 94 V-0 classification: please contact us.
White color: please contact us.

Part number	Material	Finish	A	B	C	D	E	F	G	S	Weight (g)
54-1-3513	polyamide	black	30	30	3	3	3.5	18	18	3.2	6
54-1-3514	polyamide	black	40	40	5.2	4	5.7	25	25	5.3	12
54-1-3516	polyamide	black	50	50	5.9	5	6.4	30	30	6.4	22
54-1-3518	polyamide	black	60	60	6.5	6	7	36	36	6.4	32

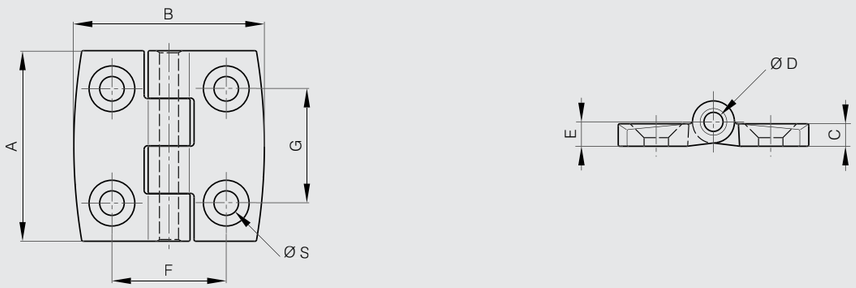

Square design hinges with studs

Hinges are made of 30% GF polyamide, pins are in 304 stainless steel.
UL 94 V-0 classification: please ask us.
White color: please ask us.

Part number	Material	Finish	A	B	C	D	E	F	G	Weight (g)
54-1-3519	polyamide	black	60	60	6.5	6	7	36	36	54

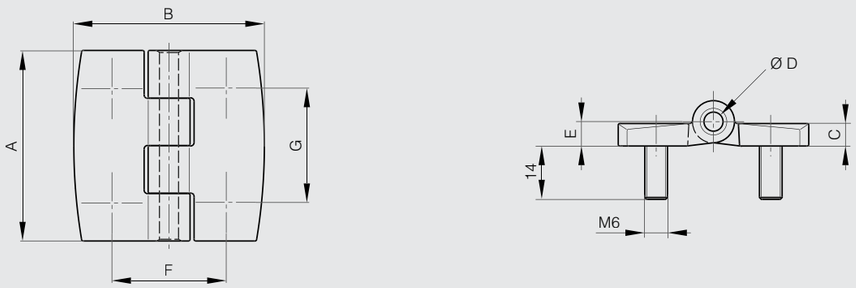

Polymer hinges www.metalika-kacin.com
Polymer hinges with pin

Symmetrical design hinges

Hinges are made of 30% GF polyamide, pins are in 304 stainless steel.
UL 94 V-0 classification: please contact us.
White color: please contact us.

Part number	Material	Finish	A	B	C	D	E	F	G	H	S	Weight (g)
54-1-3520	polyamide	black	40	80	5.2	4	5.7	13.5	25	19	5.3	20
54-1-3522	polyamide	black	40	120	5.2	4	5.7	14.5	25	38	5.3	25
54-1-3540	polyamide	black	50	100	5.9	5	6.4	16	30	24	6.4	34
54-1-3524	polyamide	black	60	120	6.5	6	7	18	36	30	6.4	34

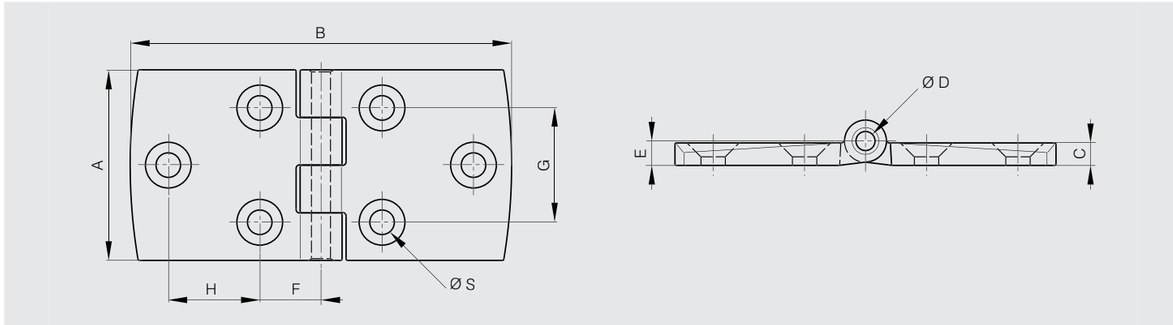

Asymmetrical design hinges

Hinges are made of 30% GF polyamide, pins are in 304 stainless steel.
UL 94 V-0 classification: please contact us.
White color: please contact us.

Part number	Material	Finish	A	B	C	D	E	F	G	H	S	Weight (g)
54-1-3528	polyamide	black	40	60	5.2	4	5.7	13	25	19	5.3	16
54-1-3536	polyamide	black	40	80	5.2	4	5.7	13.5	25	38	5.3	18
54-1-3538	polyamide	black	50	75	5.9	5	6.4	15.5	30	24	6.4	28
54-1-3532	polyamide	black	60	90	6.5	6	7	18	36	30	6.4	40

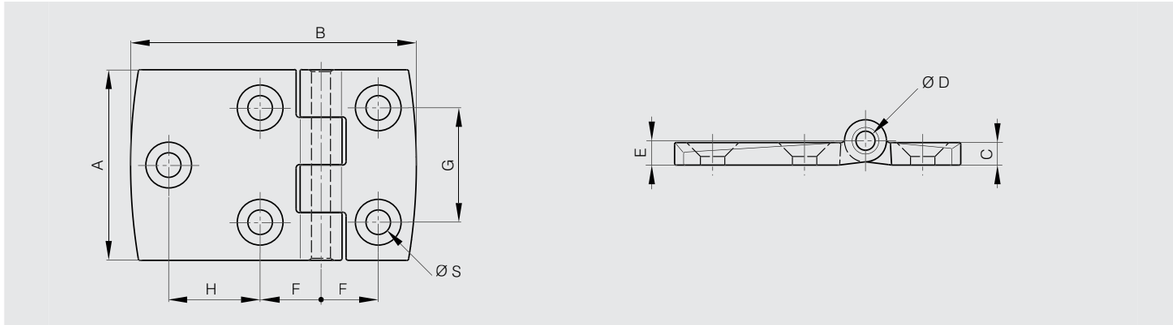

www.METALIKA-KACIN.com
www.METALIKA-KACIN.com

Polyamide hinges combined studs and holes

270° POLYMER RoHS

Hinges are made of 30% GF polyamide, pins are in 304 stainless steel.
A full product data sheet is available on our website.

Part number	Material	Finish	A	B	C	D	E	F	G	H	L	M	S	Weight (g)
54-1-3033	polyamide	black	40	40	5	4	5.5	25	25	9	11	M5	5.3	50
54-1-3034	polyamide	black	50	50	6	6	6.5	30	30	11.5	15	M6	6.4	50

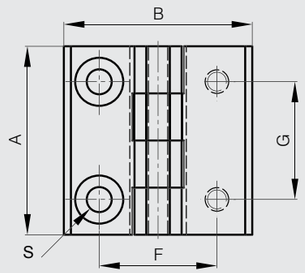

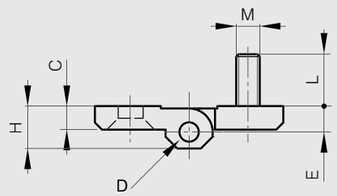

Heavy duty plastic hinge - 180° opening

180° POLYMER RoHS

Nickel plated steel pin. Max. 180° opening.

Part number	Material	Finish	A	B	C	D	Weight (g)
54-1-9000	polyamide	black	108	131	9.5	6	98

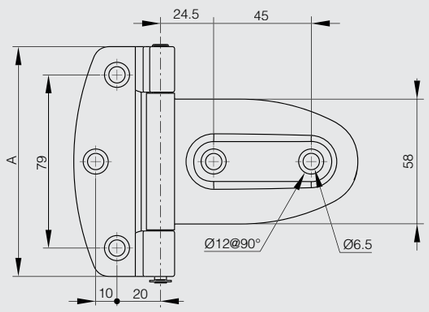

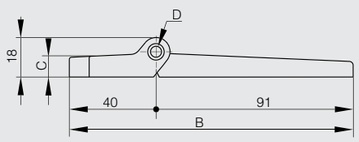

Polyamide hinges with countersunk holes

270° POLYMER RoHS

Hinges are made of 30% GF polyamide, pins are in 304 stainless steel.
A full product data sheet is available on our website.

Part number	Material	Finish	A	B	C	D	E	F	G	H	S	Weight (g)
54-1-3029	polyamide	black	40	40	5	4	5.5	25	25	9	5.3	13.5
54-1-3030	polyamide	black	50	50	6	6	6.5	30	30	11.5	6.4	28.5
218-9241	polyamide	black	60	60	8	8	8.5	36	36	15	8.4	40,5

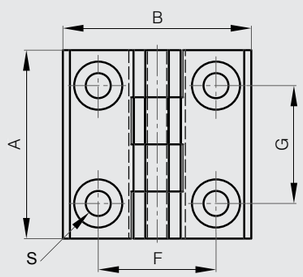

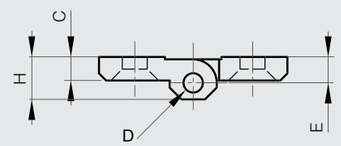

Polyamide hinges with studs

270° POLYMER RoHS

Hinges are made of 30% GF polyamide, pins are in 304 stainless steel.
A full product data sheet is available on our website.

Part number	Material	Finish	A	B	C	D	E	F	G	H	L	M	Weight (g)
54-1-3031	polyamide	black	40	40	5	4	5.5	25	25	9	11	M5	56
54-1-3032	polyamide	black	50	50	6	6	6.5	30	30	11.5	15	M6	76

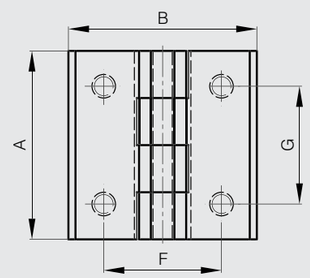

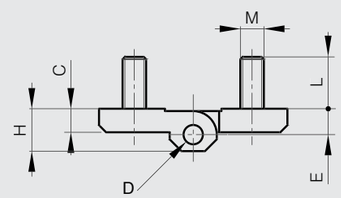

www.METALIKA-KACIN.com

Plastic hinges 63.5 mm long

Same material for pin and leaves.

Part number	Material	Finish	A	B	C	S	Note	Weight (g)
54-7-3018	polypropylene	white	63.5	54	5		undrilled	20
54-7-3019	polypropylene	black	63.5	54	5		undrilled	20
54-7-3022	polycarbonate	transparent	63.5	54	5		undrilled	20
54-7-3028	polyethylene	natural	63.5	54	5	6.2	drilled	20

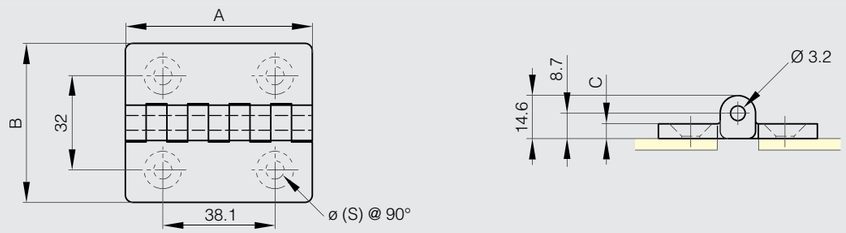

Plastic hinges 63.5 mm long with reversed leaves

Same material for pin and leaves.

Part number	Material	Finish	A	B	C	Weight (g)
54-7-3023	polypropylene	white	63.5	54	5	20
54-7-3024	polypropylene	black	63.5	54	5	20
54-7-3027	polycarbonate	transparent	63.5	54	5	20

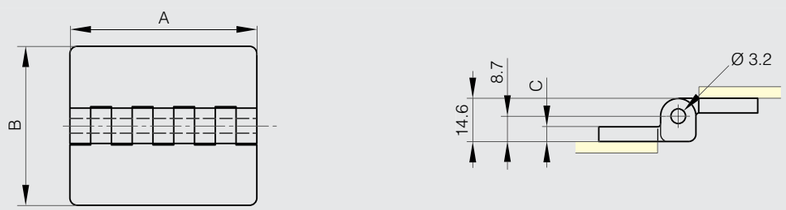

www.METALIKA-KACIN.com

Plastic hinges 25.4 mm long

Technical features:
- Temperature: -40°C up to +80°C.
- Can be fixed with: rivets, screws, nails or clamps.
- Chemical resistance: oil, solvents, sea water and most chemical agents.
- Tensile resistance: 180 N/cm.
- Material offers excellent fatigue resistance.

Part number	Material	Finish	A	B	C	S	Weight (g)
54-7-3000	polypropylene	white	25.4	76.2	3.2	3.2	5
54-7-3002	polypropylene	black	25.4	76.2	3.2	3.2	5

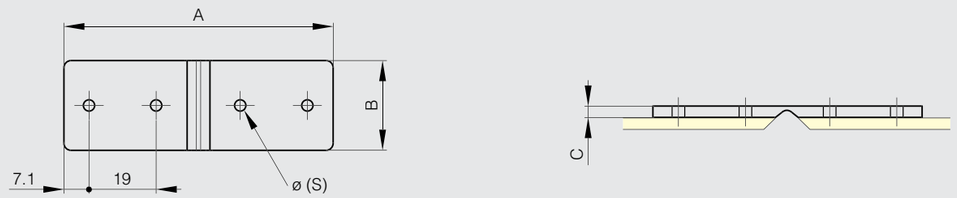

Plastic hinges 38.1 mm and 50.8 mm long

Technical features:
- Temperature: -40°C up to +80°C.
- Can be fixed with: rivets, screws, nails or clamps.
- Chemical resistance: oil, solvents, sea water and most chemical agents.
- Tensile resistance: 180 N/cm.
- Material offers excellent fatigue resistance.

Part number	Material	Finish	A	B	C	F	G	S	Weight (g)
54-7-3006	polypropylene	white	38.1	25.4	2	15.9	28.6	3.43	5
54-7-3008	polypropylene	black	38.1	25.4	2	15.9	28.6	3.43	5
54-7-3003	polypropylene	white	50.8	38.1	3.17	22.2	33.3	3.43	5
54-7-3005	polypropylene	black	50.8	38.1	3.17	22.2	33.3	3.43	5

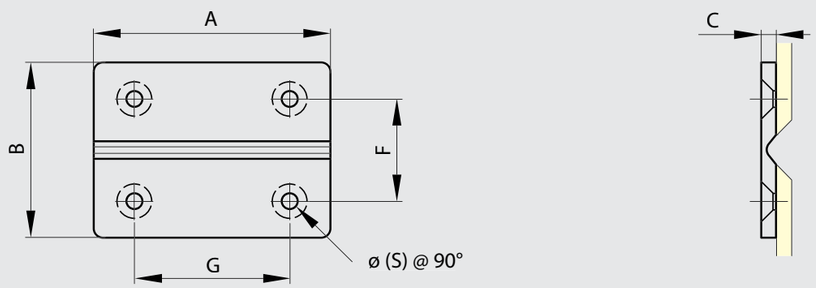

www.METALIKA-KACIN.com

Plastic hinges 76.2 mm long

Technical features:
- Temperature: -40°C up to +80°C.
- Can be fixed with: rivets, screws, nails or clamps.
- Chemical resistance: oil, solvents, sea water and most chemical agents.
- Tensile resistance: 180 N/cm.
- Material offers excellent fatigue resistance.

Part number	Material	Finish	A	B	C	S	Weight (g)
54-7-3009	polypropylene	white	76.2	63.5	4.76	4.62	16
54-7-3011	polypropylene	black	76.2	63.5	4.76	4.62	16

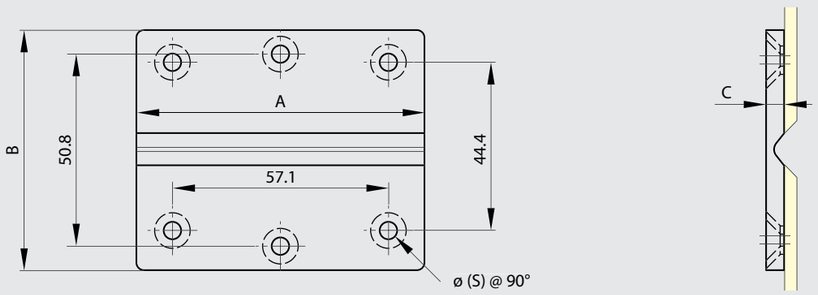

Plastic hinges 88.9 mm and 101.6 mm long

Technical features:
- Temperature: -40°C up to +80°C.
- Can be fixed with: rivets, screws, nails or clamps
- Chemical resistance: oil, solvents, sea water and most chemical agents.
- Tensile resistance: 180 N/cm.
- Material offers excellent fatigue resistance.

Part number	Material	Finish	A	B	C	E	F	G	H	S	Weight (g)
54-7-3012	polypropylene	white	88.9	88.9	6.35	71.4	54	73		6	35
54-7-3014	polypropylene	black	88.9	88.9	6.35	71.4	54	73		6	35
54-7-3015	polypropylene	white	101.6	101.6	6.35	79.4	54	83.4	27.8	8	50
54-7-3017	polypropylene	black	101.6	101.6	6.35	79.4	54	83.4	27.8	8	50

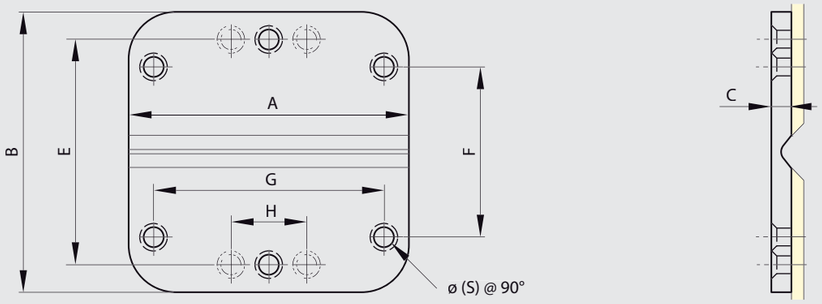

Polymer hinges
www.metalika-kacin.com
Polymer hinges without pin

Polymer continuous hinges in 15.25 meter rolls

Technical features:
- Temperature: -40°C up to +80°C.
- Can be fixed with: rivets, screws, nails or clamps.
- Chemical resistance: oil, solvents, sea water and most chemical agents.
- Tensile resistance: 180 N/cm.
- Material offers excellent fatigue resistance.

Part number	Material	Finish	B	C	Weight (g)
44-7-3000	polypropylene	white	28.6	3.2	1050
44-7-3001	polypropylene	grey	28.6	3.2	1050
44-7-3002	polypropylene	black	28.6	3.2	1050
44-7-3003	polypropylene	white	38.1	3.2	1450
44-7-3004	polypropylene	grey	38.1	3.2	1450
44-7-3005	polypropylene	black	38.1	3.2	1450
44-7-3006	polypropylene	white	50.8	3.2	2300
44-7-3007	polypropylene	grey	50.8	3.2	2300
44-7-3008	polypropylene	black	50.8	3.2	2300
44-7-3009	polypropylene	white	76.2	3.2	2900
44-7-3010	polypropylene	grey	76.2	3.2	2900
44-7-3011	polypropylene	black	76.2	3.2	2900

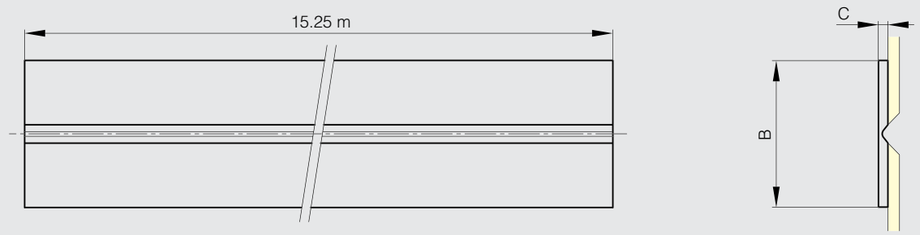

Single Living Hinge

SR 5083
SLH-16-1
Natural Polypropylene
0 to 65°C

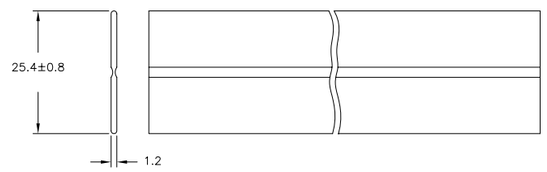

Part Number	Standard Pack Quantity (metres)
SLH-16-1	30m Rolls

Hinges

Technopolymer

MATERIAL
High-resilience polyamide based (PA) technopolymer, black colour, matte finish. Grey RAL 7040 (C33) only for CFA-SH execution.

ROTATING PIN
AISI 303 stainless steel.

STANDARD EXECUTIONS
- **CFA-B**: nickel-plated brass bosses with threaded hole.
- **CFA-p**: nickel-plated steel threaded studs.
- **CFA-SH**: pass-through holes for countersunk head screws.
- **CFA-TI-SH**: pass-through holes for countersunk head screws and rear housing to accommodate the head of threaded inserts.
- **CFA-CH**: pass-through holes for cylindrical head screws.
- **CFA-B-p**: nickel-plated brass bosses with threaded hole and nickel-plated steel threaded studs.
- **CFA-B-SH**: nickel-plated brass bosses with threaded hole and pass-through holes for countersunk head screws.
- **CFA-B-CH**: nickel-plated brass bosses with threaded hole and pass-through holes for cylindrical head screws.
- **CFA-p-SH**: nickel-plated steel threaded studs pass-through holes for countersunk head screws.
- **CFA-p-CH**: nickel-plated steel threaded studs and pass-through holes for cylindrical head screws.

ROTATION ANGLE (APPROXIMATE VALUE)
Max 215° (-35° and +180° being 0° the condition where the two interconnected surfaces are on the same plane).
Do not exceed the rotation angle limit so as not to prejudice the hinge mechanical performance.
To choose the convenient type and the right number of hinges for your application, see the Guidelines (on page 1368).

ASSEMBLY INSTRUCTIONS FOR CFA-TI-SH
1. Drill a hole in the door/doorframe with a diameter corresponding to the threaded insert used.
2. Fix the threaded insert on the door/doorframe with a riveter.
3. Fit the hinge on the door/doorframe tightening the screw into the threaded insert.

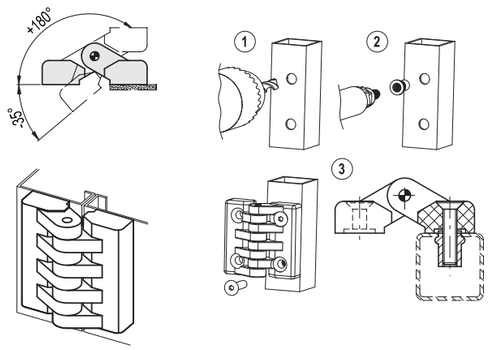

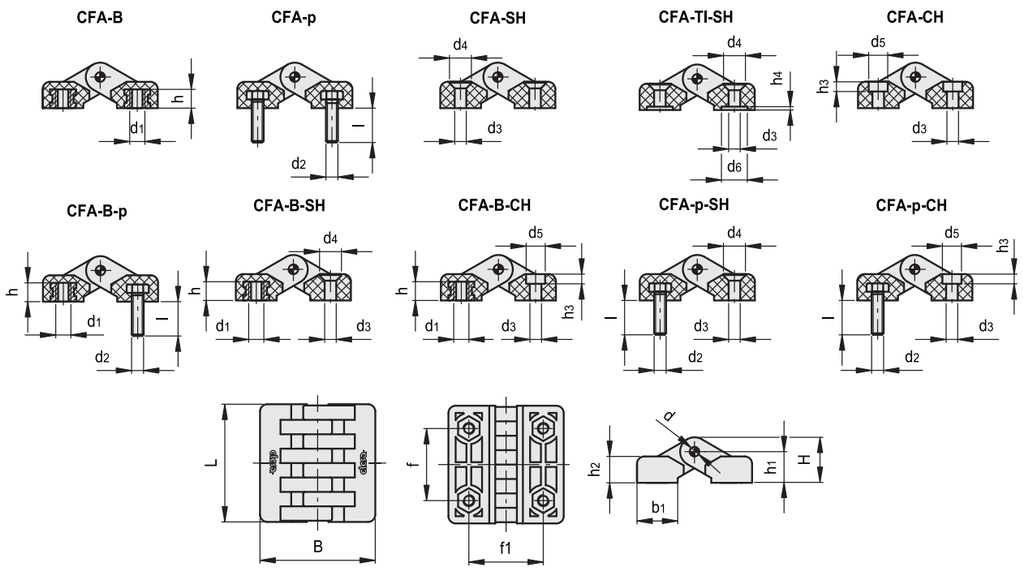

CFA-B

Code	Description	L	B	d1	h	f±0.25	f1 ±0.25	H	h1	h2	b1	d	C# [Nm]	⚖
422391	CFA.40 B-M4	39.5	38.5	M4	6.5	25	25	14	9.5	9.5	14	3	5	23
422111	CFA.49 B-M5	49.5	48	M5	8.5	30	31	19	13	11	17	4	5	39
422113	CFA.49 B-M6	49.5	48	M6	8	30	31	19	13	11	17	4	5	38
422211	CFA.65 B-M6	65	64	M6	9	40	40	23	15	13.5	24	5	5	85
422311	CFA.97 B-M10	96.5	97.5	M10	15	59.5	62.5	35	23	20.5	35	8	5	306

CFA-p

Code	Description	L	B	d2	l	f±0.25	f1 ±0.25	H	h1	h2	b1	d	C# [Nm]	⚖
422121	CFA.49 p-M5x14	49.5	48	M5	14	30	31	19	13	11	17	4	5	45
422221	CFA.65 p-M6x18	65	64	M6	18	40	40	23	15	13.5	24	5	5	90
422321	CFA.97 p-M10x20	96.5	97.5	M10	20	59.5	62.5	35	23	20.5	35	8	5	330

CFA-SH

Code	Description	L	B	f±0.25	f1 ±0.25	H	h1	h2	b1	d	d3	d4	C# [Nm]	⚖
422411	CFA.40 SH-4	39.5	38.5	25	25	14	9.5	9.5	14	3	4.5	8.5	1	14
422131	CFA.49 SH-5	49.5	48	30	31	19	13	11	17	4	5.5	10	2	29
422231	CFA.65 SH-6	65	64	40	40	23	15	13.5	24	5	6.5	12.5	3	62
422331	CFA.97 SH-10	96.5	97.5	59.5	62.5	35	23	20.5	35	8	10.5	20	5	221

CFA-TI-SH

Code	Description	L	B	d6	f±0.25	f1 ±0.25	H	h1	h2	h4	b1	d	d3	d4	d6	C# [Nm]	⚖
422416	CFA.40 TI-SH-4	39.5	38.5	10	25	25	14	9.5	9.5	1.3	14	3	4.5	8.5	-	1	14
422136	CFA.49 TI-SH-5	49.5	48	11	30	31	19	13	11	1.5	17	4	5.5	10	11	2	29
422237	CFA.65 TI-SH-6	65	64	13	40	40	23	15	13.5	1.8	24	5	6.5	12.5	13	3	62

CFA-CH

Code	Description	L	B	f±0.25	f1 ±0.25	H	h1	h2	h3	b1	d	d3	d5	C# [Nm]	⚖
422412	CFA.40 CH-4	39.5	38.5	25	25	14	9.5	9.5	4.5	14	3	4.5	8.5	1	14
422132	CFA.49 CH-5	49.5	48	30	31	19	13	11	5.5	17	4	5.5	10	2	29
422232	CFA.65 CH-6	65	64	40	40	23	15	13.5	6.5	24	5	6.5	11	5	62
422332	CFA.97 CH-10	96.5	97.5	59.5	62.5	35	23	20.5	10.5	35	8	10.5	17	5	221

CFA-B-p

Code	Description	L	B	d1	h	d2	l	f±0.25	f1 ±0.25	H	h1	h2	b1	d	C# [Nm]	⚖
422141	CFA.49 B-M5-p-M5x14	49.5	48	M5	8.5	M5	14	30	31	19	13	11	17	4	5	42
422241	CFA.65 B-M6-p-M6x18	65	64	M6	10.5	M6	18	40	40	23	15	13.5	24	5	5	88
422341	CFA.97 B-M10-p-M10x20	96.5	97.5	M10	15	M10	20	59.5	62.5	35	23	20.5	35	8	5	318

CFA-B-SH

Code	Description	L	B	d1	h	f±0.25	f1 ±0.25	H	h1	h2	b1	d	d3	d4	C [Nm] B#	C [Nm] SH#	⚖
422151	CFA.49 B-M5-SH-5	49.5	48	M5	8.5	30	31	19	13	11	17	4	5.5	10	5	2	34
422251	CFA.65 B-M6-SH-6	65	64	M6	10.5	40	40	23	15	13.5	24	5	6.5	12.5	5	3	74
422351	CFA.97 B-M10-SH-10	96.5	97.5	M10	15	59.5	62.5	35	23	20.5	35	8	10.5	20	5	5	264

CFA-B-CH

Code	Description	L	B	d1	h	f±0.25	f1 ±0.25	H	h1	h2	h3	b1	d	d3	d5	C [Nm] B#	C [Nm] CH#	⚖
422152	CFA.49 B-M5-CH-5	49.5	48	M5	8.5	30	31	19	13	11	5.5	17	4	5.5	10	5	2	34
422252	CFA.65 B-M6-CH-6	65	64	M6	10.5	40	40	23	15	13.5	6.5	24	5	6.5	11	5	5	74
422352	CFA.97 B-M10-CH-10	96.5	97.5	M10	15	59.5	62.5	35	23	20.5	10.5	35	8	10.5	17	5	5	264

Suggested tightening torque for assembly screws.

www.METALIKA-KACIN.com

CFA-p-SH

Code	Description	L	B	d2	l	f±0.25	f1 ±0.25	H	h1	h2	b1	d	d3	d4	C [Nm] p#	C [Nm] SH#	⚖
422161	CFA.49 p-M5x14-SH-5	49.5	48	M5	14	30	31	19	13	11	17	4	5.5	10	5	2	37
422261	CFA.65 p-M6x18-SH-6	65	64	M6	18	40	40	23	15	13.5	24	5	6.5	12.5	5	3	76
422361	CFA.97 p-M10x20-SH-10	96.5	97.5	M10	20	59.5	62.5	35	23	20.5	35	8	10.5	20	5	5	276

CFA-p-CH

Code	Description	L	B	d2	l	f±0.25	f1 ±0.25	H	h1	h2	h3	b1	d	d3	d5	C [Nm] p#	C [Nm] CH#	⚖
422162	CFA.49 p-M5x14-CH-5	49.5	48	M5	14	30	31	19	13	11	5.5	17	4	5.5	10	5	2	37
422262	CFA.65 p-M6x18-CH-6	65	64	M6	18	40	40	23	15	13.5	6.5	24	5	6.5	11	5	5	76
422362	CFA.97 p-M10x20-CH-10	96.5	97.5	M10	20	59.5	62.5	35	23	20.5	10.5	35	8	10.5	17	5	5	276

CFA-SH-C33

Code	Description	L	B	f±0.25	f1 ±0.25	H	h1	h2	b1	d	d3	d4	C# [Nm]	⚖
422411-C33	CFA.40 SH-4-C33	39.5	38.5	25	25	14	9.5	9.5	14	3	4.5	8.5	1	14
422131-C33	CFA.49 SH-5-C33	49.5	48	30	31	19	13	11	17	4	5.5	10	2	29
422231-C33	CFA.65 SH-6-C33	65	64	40	40	23	15	13.5	24	5	6.5	12.5	3	62
422331-C33	CFA.97 SH-10-C33	96.5	97.5	59.5	62.5	35	23	20.5	35	8	10.5	20	5	221

Suggested tightening torque for assembly screws.

Index C33: hinge RAL 7040 grey colour.

Resistance tests	AXIAL STRESS		RADIAL STRESS		90° ANGLED STRESS	
Description	Maximum working load Ea [N]	Load at breakage Ra [N]	Maximum working load Er [N]	Load at breakage Rr [N]	Maximum working load E90 [N]	Load at breakage R90 [N]
CFA.40 B-M4	200	2050	240	2220	100	730
CFA.40 SH-4	130	2080	290	2030	280	1520
CFA.40 CH-4	137	1800	230	1760	180	1330
CFA.49 B-M5	400	3770	440	3070	170	1470
CFA.49 B-M6	330	3250	470	3250	110	1540
CFA.49 p-M5x14	370	3070	360	1970	200	1680
CFA.49 SH-5	300	2960	310	2880	320	2490
CFA.49 CH-5	360	3080	310	2530	250	1620
CFA.49 B-M5-p-M5x14	370	3070	360	1970	200	1470
CFA.49 B-M5-SH-5	400	2960	280	2880	170	1470
CFA.49 B-M5-CH-5	360	3080	320	2530	170	1470
CFA.49 p-M5x14-SH-5	370	2960	280	1970	200	1680
CFA.49 p-M5x14-CH-5	360	3070	320	1970	200	1620
CFA.65 B-M6	640	4570	690	5670	220	2280
CFA.65 p-M6x18	510	5890	460	6620	220	3190
CFA.65 SH-6	520	4760	720	6270	240	4180
CFA.65 CH-6	510	5280	490	5790	260	3190
CFA.65 B-M6-p-M6x18	510	4570	460	5670	220	2280
CFA.65 B-M6-SH-6	640	4570	690	5670	220	2280
CFA.65 B-M6-CH-6	510	4570	490	5670	220	2280
CFA.65 p-M6x18-SH-6	510	4760	460	6270	220	3190
CFA.65 p-M6x18-CH-6	510	5280	460	5790	220	3190
CFA.97 B-M10	970	7660	2120	17940	590	5210
CFA.97 p-M10x20	890	5950	1730	16190	460	3690
CFA.97 SH-10	1110	6730	1230	10460	510	4100
CFA.97 CH-10	1050	4860	2060	13670	540	4760
CFA.97 B-M10-p-M10x20	890	5950	1730	16190	460	3690
CFA.97 B-M10-SH-10	970	6730	1230	10460	510	4110
CFA.97 B-M10-CH-10	970	4860	2060	13670	540	4760
CFA.97 p-M10x20-SH-10	890	5950	1230	10460	460	3690
CFA.97 p-M10x20-CH-10	890	4860	1730	13670	460	3690

Hinges with slotted holes of adjustment

Technopolymer

MATERIAL
High-resilience polyamide based (PA) technopolymer, black colour, matte finish.

ROTATING PIN
AISI 303 stainless steel.

STANDARD EXECUTIONS
Pass-through slotted holes for cylindrical head screws which allow the adjustment during assembly.
- **CFA-SL-H**: for horizontal adjustments.
- **CFA-SL-V**: for vertical adjustments.
- **CFA-SL-HV**: for both horizontal and vertical adjustments.

ROTATION ANGLE (APPROXIMATE VALUE)
Max 215° (-35° and +180° being 0° the condition where the two interconnected surfaces are on the same plane).
Do not exceed the rotation angle limit so as not to prejudice the hinge mechanical performance.
To choose the convenient type and the right number of hinges for your application, see the Guidelines (on page 1368).

FMdesign

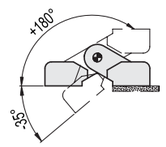

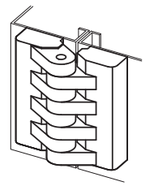

Resistance tests	AXIAL STRESS		RADIAL STRESS		90° ANGLED STRESS	
Description	Maximum working load Ea [N]	Load at breakage Ra [N]	Maximum working load Er [N]	Load at breakage Rr [N]	Maximum working load E90 [N]	Load at breakage R90 [N]
CFA.65-SL	510	5280	490	5790	260	3190

CFA-SL-H **CFA-SL-V** **CFA-SL-HV**

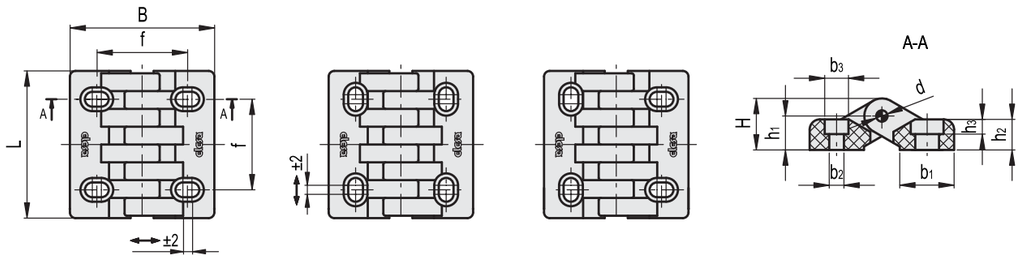

Code	Description	L	B	f	H	h1	h2	h3	b1	b2	b3	d	C# [Nm]	⚖
422272	CFA.65-SL-H	65	64	40	23	15	13.5	6.5	24	6.5	10.5	5	3	60
422276	CFA.65-SL-V	65	64	40	23	15	13.5	6.5	24	6.5	10.5	5	3	60
422280	CFA.65-SL-HV	65	64	40	23	15	13.5	6.5	24	6.5	10.5	5	3	60

Suggested tightening torque for assembly screws.

Hinges

Technopolymer rotating pin

MATERIAL
High-resilience polyamide based (PA) technopolymer, black colour, matte finish.

ROTATING PIN
Acetal based (POM) technopolymer, black colour.

STANDARD EXECUTIONS
- **CFAX-B**: nickel-plated brass bosses with threaded hole.
- **CFAX-SH**: pass-through holes for countersunk head screws.
- **CFAX-CH**: pass-through holes for cylindrical head screws.

ROTATION ANGLE (APPROXIMATE VALUE)
Max 215° (-35° and + 180° being 0° the condition where the two interconnected surfaces are on the same plane).
Do not exceed the rotation angle limit so as not to prejudice the hinge mechanical peformance.
To choose the convenient type and the right number of hinges for your application, see the Guidelines (on page 1368).

EXECUTION CFK.
False hinge made up of a single body without rotation pin. It can be used for blocking fixed panels, when you want to obtain the same general aesthetical effect.

RoHS PA +80° -20°

FMdesign

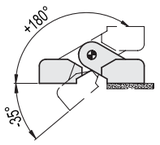

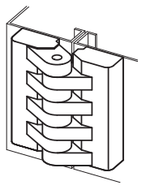

Resistance tests	AXIAL STRESS		RADIAL STRESS		90° ANGLED STRESS	
Description	Maximum working load Ea [N]	Load at breakage Ra [N]	Maximum working load Er [N]	Load at breakage Rr [N]	Maximum working load E90 [N]	Load at breakage R90 [N]
CFAX.40 B-M4	200	1850	240	2000	100	560
CFAX.40 SH-4	130	1870	290	1800	280	1370
CFAX.40 CH-4	137	1340	230	1580	180	1200
CFAX.49 B-M5	400	2400	440	2760	170	1320
CFAX.49 SH-5	300	2660	310	2600	320	2240
CFAX.49 CH-5	360	2480	310	2270	250	1460
CFAX.65 B-M6	640	4000	690	4400	220	1400
CFAX.65 SH-6	520	4300	720	4800	240	3760
CFAX.65 CH-6	510	3700	490	5200	260	2870

Polymer hinges www.metalika-kacin.com

CFAX-B CFAX-SH CFAX-CH

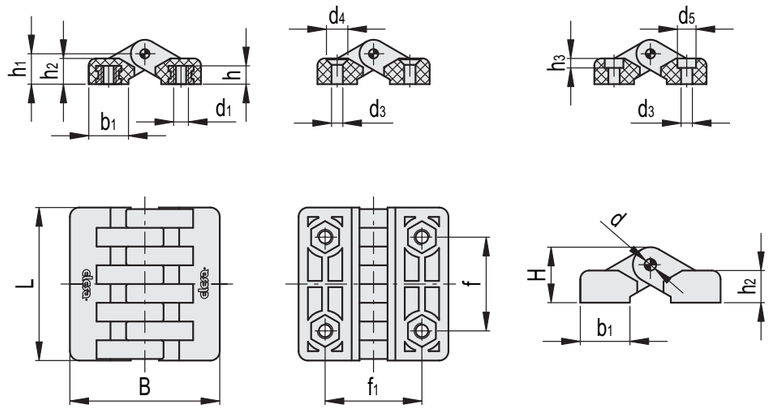

CFAX-B

Code	Description	L	B	d1	h	f±0.25	f1 ±0.25	H	h1	h2	b1	d	C# [Nm]	⚖
422421	CFAX.40 B-M4	39.5	38.5	M4	6.5	25	25	14	9.5	9.5	14	3	5	23
422431	CFAX.49 B-M5	49.5	48	M5	8.5	30	31	19	13	11	17	4	5	39
422441	CFAX.65 B-M6	65	64	M6	9	40	40	23	15	13.5	24	5	5	85

CFAX-SH

Code	Description	L	B	f±0.25	f1 ±0.25	H	h1	h2	b1	d	d3	d4	C# [Nm]	⚖
422423	CFAX.40 SH-4	39.5	38.5	25	25	14	9.5	9.5	14	3	4.5	8.5	1	14
422433	CFAX.49 SH-5	49.5	48	30	31	19	13	11	17	4	5.5	10	2	29
422443	CFAX.65 SH-6	65	64	40	40	23	15	13.5	24	5	6.5	12.5	3	62

CFAX-CH

Code	Description	L	B	f±0.25	f1 ±0.25	H	h1	h2	h3	b1	d	d3	d5	C# [Nm]	⚖
422425	CFAX.40 CH-4	39.5	38.5	25	25	14	9.5	9.5	4.5	14	3	4.5	8.5	1	14
422435	CFAX.49 CH-5	49.5	48	30	31	19	13	11	5.5	17	4	5.5	10	2	29
422445	CFAX.65 CH-6	65	64	40	40	23	15	13.5	6.5	24	5	6.5	11	5	62

Suggested tightening torque for assembly screws.

www.METALIKA-KACIN.com

Hinges with detent position at 90°

Technopolymer

MATERIAL
High-resilience polyamide based (PA) technopolymer, black colour, matte finish.

ROTATING PIN
AISI 303 stainless steel.

STANDARD EXECUTIONS
- **CFA-F-B**: nickel-plated brass bosses with threaded hole.
- **CFA-F-CH**: pass-through holes for cylindrical head screws.
- **CFA-F-SH**: pass-through holes for countersunk head screws.

FEATURES AND APPLICATIONS
CFA-F hinges are recommended when the opening of the door must not exceed the limit of 90°.
Once the hinge is fitted onto the machine/door, the teeth of the detent system remain inside the hinge. Thus the operator cannot reach them for the safety of his hands.

ROTATION ANGLE (APPROXIMATE VALUE)
Max 100° (-10° and +90° being 0° the condition where the two interconnected surfaces are on the same plane).
To choose the convenient type and the right number of hinges for your application, see the Guidelines (on page 1368).

FMdesign

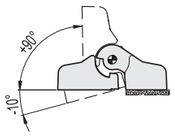

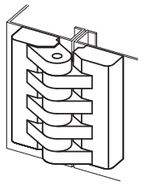

Resistance tests	AXIAL STRESS		RADIAL STRESS		90° ANGLED STRESS	
Description	Maximum working load Ea [N]	Load at breakage Ra [N]	Maximum working load Er [N]	Load at breakage Rr [N]	Maximum working load E90 [N]	Load at breakage R90 [N]
CFA.49-F-B-M6	330	3250	470	3250	110	1540
CFA.49-F-CH-5	380	3600	370	3300	320	2490
CFA.49-F-SH-5	300	2960	310	2880	320	2490
CFA.65-F-B-M6	1150	5780	1550	7780	760	3820
CFA.65-F-CH-6	810	5410	1000	6550	720	3980
CFA.65-F-SH-6	840	5680	1010	7010	790	3960

CFA-F-B

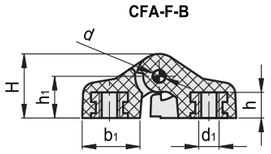

CFA-F-CH

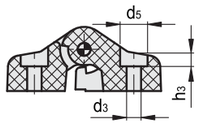

CFA-F-SH

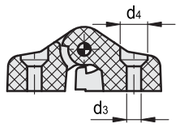

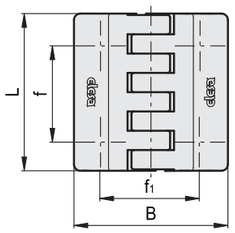

Code	Description	L	B	d1	h	f±0.25	f1 ±0.25	H	h1	h3	b1	d	d3	d4	d5	C# [Nm]	⚖
422114	CFA.49-F-B-M6	49.5	48	M6	8	30.2	31	20	13	-	18	4	-	-	-	5	42
422135	CFA.49-F-CH-5	49.5	48	-	-	30.2	31	20	13	5.5	18	4	5.5	-	10	2	29
422133	CFA.49-F-SH-5	49.5	48	-	-	30.2	31	20	13	-	18	4	5.5	10	-	2	29
422212	CFA.65-F-B-M6	65	63.5	M6	9	40	40	25	16	-	24	5	-	-	-	5	84
422235	CFA.65-F-CH-6	65	63.5	-	-	40	40	25	16	6.5	24	5	6.5	-	11	3	62
422236	CFA.65-F-SH-6	65	63.5	-	-	40	40	25	16	-	24	5	6.5	12.5	-	3	62

Suggested tightening torque for assembly screws.

Hinges with friction brake

Technopolymer

MATERIAL
High-resilience polyamide based (PA) technopolymer, black colour, matte finish.

ROTATING PIN
Black-oxide steel.

STANDARD EXECUTION
Pass-through holes for countersunk head screws.

ADJUSTABLE HANDLE FOR CLAMPING
Glass-fibre reinforced polyamide based (PA) technopolymer, black colour, matte finish.
Red writing "PUSH" tampoprinted on the lever body (avoid contact with solvents, alcohol or detergents containing alcohol).
Black-oxide steel retaining screw, AISI 302 stainless steel return spring.
Boss with threaded blind hole in black-oxide steel (CFA.49 and CFA.65) or brass (CFA.97).

ROTATION ANGLE (APPROXIMATE VALUE)
Max 215° (-35° and +180° being 0° the condition where the two interconnected surfaces are on the same plane).
Do not exceed the rotation angle limit so as not to prejudice the hinge mechanical peformance.

FEATURES AND APPLICATIONS
CFA-ERS hinge with friction brake allows to adjust the door open and close desired positions, and also the door clamping in any position within the rotation angle of 215°.

INSTRUCTIONS OF USE
The friction effect is obtained by clamping the two hinged bodies using the special adjustable handle.
To operate the adjusting mechanism, push down the lever (PUSH).
By releasing the lever, the spring releases the toothing, thus the handle can return to its starting position and the lever can rotate freely together with the door without obstructing the movement, even in case of accidental shock.
The high number of teeth within the adjustable handle guarantees rotation even in case of very limited movement of the lever arm.
To choose the convenient type and the right number of hinges for your application, see the Guidelines (on page 1368).
For strength data, see the correspondent products of the series CFA. (see page 1370).

FMdesign

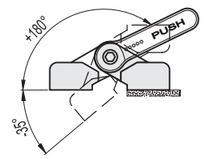

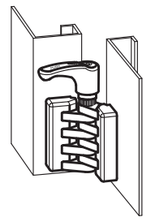

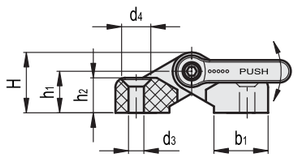

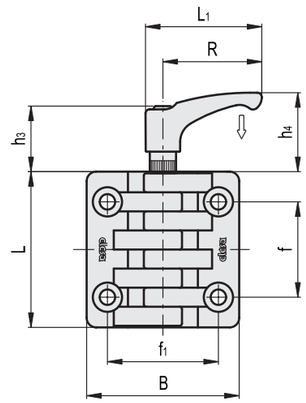

Code	Description	L	B	L1	f±0.25	f1 ±0.25	H	h1	h2	h3	h4	b1	R	d3	d4	⚖
422134	CFA.49-ERS-SH-5	49.5	48	52	30	31	19	13	11	29	36	17	44	5.5	10	40
422234	CFA.65-ERS-SH-6	65	64	52	40	40	23	15	13.5	29	36	24	44	6.5	11.5	75
422334	CFA.97-ERS-SH-10	96.5	97.5	73.5	59.5	62.5	35	23	20.5	37	48	35	63	10.5	20	240

www.METALIKA-KACIN.com

Hinges with screw-covers

Technopolymer

MATERIAL
Glass-fibre reinforced polyamide based (PA) technopolymer, black colour, matte finish.

ROTATING PIN
Acetal based (POM) technopolymer, black colour.

SCREW-COVERS
Polyester based (PBT) technopolymer, black colour, glossy finish, snap-in assembly.

STANDARD EXECUTIONS
- **CFT-SH**: pass-through holes for countersunk head screws.
- **CFT-EH**: hexagonal pass-through holes for cylindrical head screws, hexagonal head nuts or screws. CFT. hinge with boss or stud can be obtained by means of hexagonal head nuts or screws fitted into the assembly hole.

ROTATION ANGLE (APPROXIMATE VALUE)
Max 200° (-20° and +180° being 0° the condition where the interconnected surfaces are on the same plane).
Do not exceed the rotation angle limit so as not to prejudice the hinge mechanical performance.
To choose the convenient type and the right number of hinges for your application, see the Guidelines (on page 1368).
Screw-covers in different RAL colours.

ELESA Original design

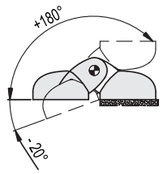

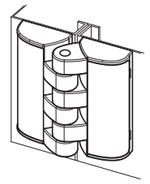

Resistance tests	AXIAL STRESS		RADIAL STRESS		90° ANGLED STRESS	
Description	Maximum working load Ea [N]	Load at breakage Ra [N]	Maximum working load Er [N]	Load at breakage Rr [N]	Maximum working load E90 [N]	Load at breakage R90 [N]
CFT.40	300	1500	300	1500	200	750
CFT.49	500	2900	400	3000	300	1600
CFT.65	800	4500	800	4400	500	2200

CFT-SH

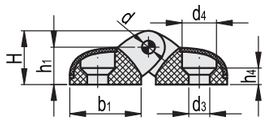

CFT-EH

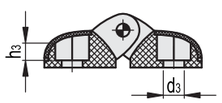

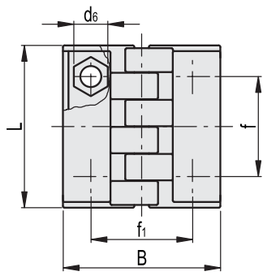

Code	Description	L	B	f±0.25	f1 ±0.25	H	h1	h3	h4	b1	d	d3	d4	d6	C# [Nm]	⚖
427112-C9	CFT.40 SH-4-C9	39.5	38	25	25	13	9	-	4.5	17.5	3	4.5	8.5	-	2	11
427132-C9	CFT.49 SH-5-C9	49.5	48	30.5	31	16.5	11.5	-	5	21.5	4	5.5	10.5	-	2	24
427152-C9	CFT.65 SH-6-C9	65	63	40	40	21.5	15	-	10	29	5	6.5	12.5	-	2	50
427111-C9	CFT.40 EH-4-C9	39.5	38	25	25	13	9	4	-	17.5	3	4.5	-	7	2	11
427131-C9	CFT.49 EH-5-C9	49.5	48	30.5	31	16.5	11.5	5	-	21.5	4	5.5	-	8.5	2	24
427133-C9	CFT.49 EH-6-C9 *	49.5	48	30.5	31	16.5	11.5	5	-	21.5	4	6.5	-	10	2	24
427151-C9	CFT.65 EH-6-C9	65	63	40	40	21.5	15	7	-	29	5	6.5	-	10	2	50

***** In case of assembly with cylindrical screw, use a shorted head screw.

Suggested tightening torque for assembly screws.

Hinges

Technopolymer

MATERIAL
Glass-fibre reinforced polyamide based (PA) technopolymer, black colour, matte finish.

ROTATING PIN
Acetal resin based (POM) technopolymer, black colour.

STANDARD EXECUTIONS
- **CFTX-SH**: pass-through holes for countersunk head screws.
- **CFTX-EH**: hexagonal pass-through holes for cylindrical head screws. This hinge with boss or stud can be obtained by means of hexagonal head nuts or screws fitted into the assembly hole.

ROTATION ANGLE (APPROXIMATE VALUE)
Max 200° (-20° and +180° being 0° the condition where the interconnected surfaces are on the same plane).
Do not exceed the rotation angle limit so as not to prejudice the hinge mechanical performance.
To choose the convenient type and the right number of hinges for your application, see the Guidelines (on page 1368).

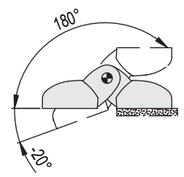

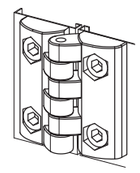

Resistance tests	AXIAL STRESS		RADIAL STRESS		90° ANGLED STRESS	
Description	Maximum working load Ea [N]	Load at breakage Ra [N]	Maximum working load Er [N]	Load at breakage Rr [N]	Maximum working load E90 [N]	Load at breakage R90 [N]
CFTX.40	300	1500	300	1500	200	750
CFTX.49	500	2900	400	3000	300	1600
CFTX.65	800	4500	800	4400	500	2200

CFTX-SH

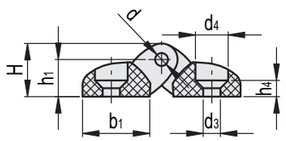

CFTX-EH

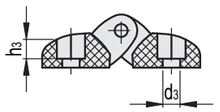

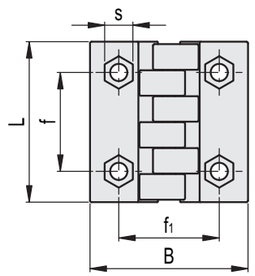

Code	Description	L	B	f±0.25	f1 ±0.25	H	h1	h3	h4	b1	d	d3	d4	s	C# [Nm]	⚖
427211	CFTX.40 SH-4	39.5	38.5	25	25	13	9	-	4.5	16.5	3	4.5	8.5	-	2	9
427231	CFTX.49 SH-5	49.5	49	30.5	31	16.5	11.5	-	5	21	4	5.5	10.5	-	2	22
427251	CFTX.65 SH-6	65	64	40	40	21.5	15	-	9	27.5	5	6.5	12.5	-	2	48
427201	CFTX.40 EH-4	39.5	39.5	25	25	13	9	4.5	-	16.5	3	4.5	-	7	2	9
427221	CFTX.49 EH-5	49.5	49	30.5	31	16.5	11.5	6	-	21	4	5.5	-	8	2	22
427222	CFTX.49 EH-6	49.5	49	30.5	31	16.5	11.5	6	-	21	4	6.5	-	10	2	22
427241	CFTX.65 EH-6	65	64	40	40	21.5	15	7.5	-	27.5	5	6.5	-	10	2	48

Suggested torque for screw assembly.

www.METALIKA-KACIN.com

Hinges with screw-covers

Technopolymer

RoHS POM +60° -20°

MATERIAL
Acetal resin based (POM) technopolymer, black colour, matte finish.

ROTATING PIN
Acetal based (POM) technopolymer, black colour.

SCREW-COVERS
Polyester based (PBT) technopolymer, black colour, matte finish, snap-in assembly.

STANDARD EXECUTIONS
- **CFQ-SH**: pass-through holes for countersunk head screws.
- **CFQ-CH**: pass-through holes for cylindrical head screws.
- **CFQ-EH**: pass-through holes for hexagonal head screws.

ROTATION ANGLE (APPROXIMATE VALUE)
Max 195° (-15° and +180° being 0° the condition where the interconnected surfaces are on the same plane).
Do not exceed the rotation angle limit so as not to prejudice the hinge mechanical performance.
To choose the convenient type and the right number of hinges for your application, see the Guidelines (on page 1368).

FMdesign

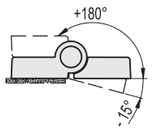

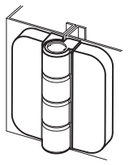

Resistance tests					
AXIAL STRESS		RADIAL STRESS		90° ANGLED STRESS	
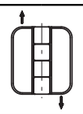		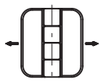			
Maximum working load Ea [N]	Load at breakage Ra [N]	Maximum working load Er [N]	Load at breakage Rr [N]	Maximum working load E90 [N]	Load at breakage R90 [N]
300	1220	350	1970	290	720

CFQ-SH

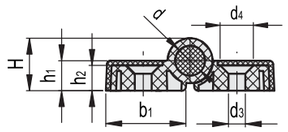

CFQ-CH

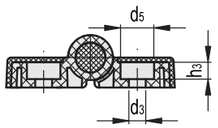

CFQ-EH

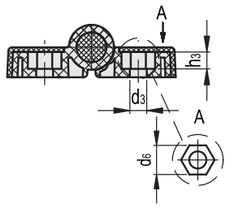

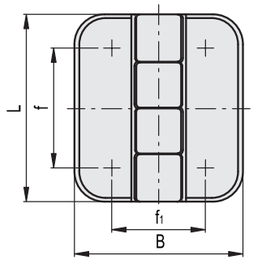

Code	Description	L	B	f	f1	H	h1	h2	h3	b1	d	d3	d4	d5	d6	C# [Nm]	⚖
426331-C9	CFQ.50 SH-4-C9	50	45	32	25	14	8	7	-	21.5	8	4.5	8.5	-	-	1.5	17
426332-C9	CFQ.50 CH-4-C9	50	45	32	25	14	8	7	4.5	21.5	8	4.5	-	8.5	-	1.5	17
426333-C9	CFQ.50 EH-4-C9	50	45	32	25	14	8	7	4.5	21.5	8	4.5	-	-	7	1.5	17

Suggested tightening torque for assembly screws.

Hinges

Technopolymer

RoHS PA +100° -30°

MATERIAL
High-resilience polyamide based (PA) technopolymer, black colour, matte finish.

ROTATING PIN
AISI 303 stainless steel.

STANDARD EXECUTIONS
Pass-through holes for cylindrical head screws.

ROTATION ANGLE (APPROXIMATE VALUE)
Max 200° (-20° and +180° being 0° the condition where the interconnected surfaces are on the same plane).
Do not exceed the rotation angle limit so as not to prejudice the hinge mechanical performance.
To choose the convenient type and the right number of hinges for your application, see the Guidelines (on page 1368).

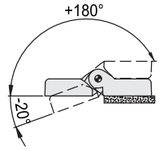

Resistance tests						
	AXIAL STRESS		RADIAL STRESS		90° ANGLED STRESS	
	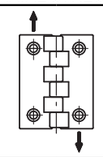		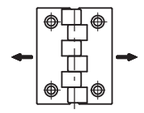		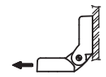	
Description	Maximum working load Ea [N]	Load at breakage Ra [N]	Maximum working load Er [N]	Load at breakage Rr [N]	Maximum working load E90 [N]	Load at breakage R90 [N]
CFL.102 CH-6	4000	10000	4500	10000	2000	4000
CFL.102 CH-8	3500	9000	4500	10000	2000	4000

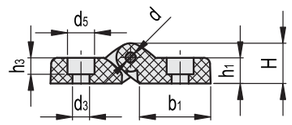

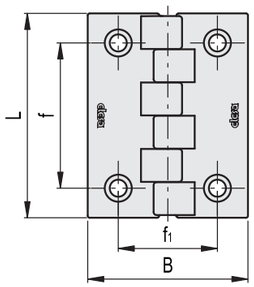

Code	Description	L	B	f±0.25	f1 ±0.25	H	h1	h3	b1	d	d3	d5	C# [Nm]	⚖
425201	CFL.102 CH-6	102	80	72.5	49.5	20.5	13	6.5	35.5	5	6.5	10.5	5	110
425202	CFL.102 CH-8	102	80	72.5	49.5	20.5	13	8	35.5	5	8.5	13.5	5	106

Suggested tightening torque for assembly screws.

www.METALIKA-KACIN.com
www.METALIKA-KACIN.com

Hinges

SUPER-technopolymer

MATERIAL
Glass-fibre reinforced polyamide based (PA) SUPER-technopolymer.

COLOUR
- CFM.: black, matte finish.
- CFM-CLEAN: white similar to RAL 9002, matte finish.

ROTATING PIN
AISI 303 stainless steel.

STANDARD EXECUTIONS
- **CFM-p**: nickel-plated steel threaded studs.
- **CFM-SH**: pass-through holes for countersunk head screws.
- **CFM-CH**: pass-through holes for cylindrical head screws with washer type UNI 6592.
- **CFM-p-SH**: nickel-plated steel threaded studs and pass-through holes for countersunk head screws.
- **CFM-p-CH**: nickel-plated steel threaded studs and pass-through holes for cylindrical head screws with UNI 6592 washer.
- **CFM.60-SL-CH**: pass-through slotted hole for shorted cylindrical head screws UNI 9327 which allow adjustment during clamping.

ROTATION ANGLE (APPROXIMATE VALUE)
Max 270° (-90° and +180° being 0° the condition where the two interconnected surfaces are on the same plane).
Do not exceed the rotation angle limit so as not to prejudice the hinge mechanical performance.
To choose the convenient type and the right number of hinges for your application, see the Guidelines (on page 1368).

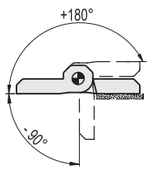

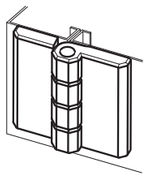

Resistance tests	AXIAL STRESS	RADIAL STRESS	90° ANGLED STRESS
Description	Max limit static load Sa [N]	Max limit static load Sr [N]	Max limit static load S90 [N]
CFM.30 SH-4	1400	1700	1000
CFM.30 CH-4	1300	1700	850
CFM.40 p-M5x12	2000	1900	1000
CFM.40 SH-5	1900	1900	1280
CFM.40 CH-5	1900	1600	1000
CFM.40 p-M5x12-SH-5	1900	1900	1000
CFM.40 p-M5x12-CH-5	1900	1600	1000
CFM.50 p-M6x12	2340	2560	2100
CFM.50 SH-6	2630	2400	1720
CFM.50-63 SH-6	800	1600	1000
CFM.50-76 SH-6	600	1500	1000
CFM.50 CH-6	2860	2410	1360
CFM.50 p-M6x12-SH-6	2340	2400	1720
CFM.50 p-M6x12-CH-6	2340	2410	1360
CFM.60 p-M8x14.5	3000	3940	2130
CFM.60 SH-8	3320	2960	3070
CFM.60 CH-8	3440	2810	2170
CFM.60 p-M8x14.5-SH-8	3000	2960	2130
CFM.60 p-M8x14.5-CH-8	3000	2810	2130
CFM.60-45-SH-6	2920	3010	1310
CFM.60-SL-CH-6	960	1200	1360

The max static load is the value above which the material may break thus prejudicing the hinge functionality use. Obviously, a suitable factor, according to the importance and the safety level of the specific application must be applied to this value.

Valid values also for CFM-CLEAN.

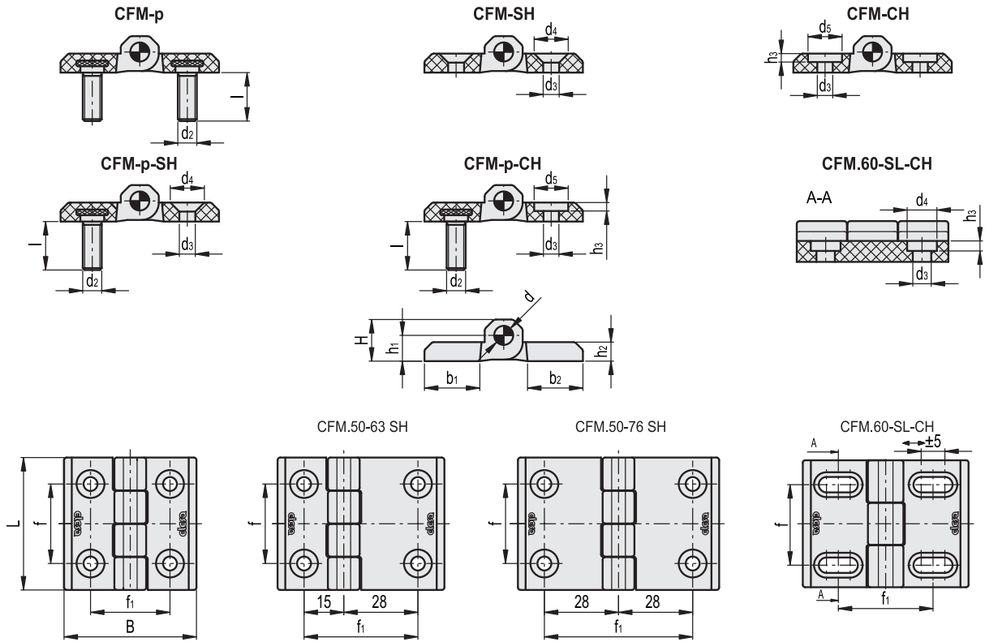

CFM.

Code	Description	L	B	d2	l	f±0.25	f1 ±0.25	H	h1	h2	h3	b1	b2	d	d3	d4	d5	C [Nm] p#	C [Nm] SH/ CH#	⚖
425411	CFM.30-SH-4	30	30	-	-	18	18	7	4	3.5	-	10.5	10.5	2.5	4.5	8.5	-	-	3	11
425412	CFM.30-CH-4	30	30	-	-	18	18	7	4	3.5	1.3	10.5	10.5	2.5	4.5	-	8.5	-	3	11
425521	CFM.40-p-M5x12	40	40	M5	12	25	25	9	5.5	5	-	14	14	4	-	-	-	5	-	26
425511	CFM.40-SH-5	40	40	-	-	25	25	9	5.5	5	-	14	14	4	5.5	10.5	-	-	3	14
425512	CFM.40-CH-5	40	40	-	-	25	25	9	5.5	5	1.7	14	14	4	5.5	-	10.5	-	5	14
425531	CFM.40-p-M5x12-SH-5	40	40	M5	12	25	25	9	5.5	5	-	14	14	4	5.5	10.5	-	5	3	20
425532	CFM.40-p-M5x12-CH-5	40	40	M5	12	25	25	9	5.5	5	1.7	14	14	4	5.5	-	10.5	5	5	20
425621	CFM.50-p-M6x12	50	50	M6	12	30	30	11.5	6.5	6	-	18	18	6	-	-	-	5	-	50
425611	CFM.50-SH-6	50	50	-	-	30	30	11.5	6.5	6	-	18	18	6	6.5	12.5	-	-	5	30
425851	CFM.50-63-SH-6	50	63	-	-	30	43	11.5	6.5	6	-	18	31	6	6.5	12.5	-	-	5	37
425856	CFM.50-76-SH-6	50	76	-	-	30	56	11.5	6.5	6	-	31	31	6	6.5	12.5	-	-	5	42
425612	CFM.50-CH-6	50	50	-	-	30	30	11.5	6.5	6	3	18	18	6	6.5	-	12.5	-	5	30
425631	CFM.50-p-M6x12-SH-6	50	50	M6	12	30	30	11.5	6.5	6	-	18	18	6	6.5	12.5	-	5	5	40
425632	CFM.50-p-M6x12-CH-6	50	50	M6	12	30	30	11.5	6.5	6	3	18	18	6	6.5	-	12.5	5	5	40
425721	CFM.60-p-M8x14.5	60	60	M8	14.5	36	36	15	8.5	8	-	21	21	8	-	-	-	5	-	101
425711	CFM.60-SH-8	60	60	-	-	36	36	15	8.5	8	-	21	21	8	8.5	16.5	-	-	5	57
425712	CFM.60-CH-8	60	60	-	-	36	36	15	8.5	8	4	21	21	8	8.5	-	16.5	-	5	57
425731	CFM.60-p-M8x14.5-SH-8	60	60	M8	14.5	36	36	15	8.5	8	-	21	21	8	8.5	16.5	-	5	5	79
425732	CFM.60-p-M8x14.5-CH-8	60	60	M8	14.5	36	36	15	8.5	8	4	21	21	8	8.5	-	16.5	5	5	79
425812	CFM.60-45-SH-6	60	70	-	-	34	45	14.5	8	7.5	-	26	26	8	6.5	12.5	-	-	5	62
425822	CFM.60-SL-CH-6	60	70	-	-	34	40	14.5	8	7.5	4	26	26	8	6.5	10.5	-	-	4	61

CFM-CLEAN

Code	Description	L	B	f±0.25	f1 ±0.25	H	h1	h2	b1	b2	d	d3	d4	C# [Nm]	⚖
425441	CFM.30-SH-4-CLEAN	30	30	18	18	7	4	3.5	10.5	10.5	2.5	4.5	8.5	3	11
425541	CFM.40-SH-5-CLEAN	40	40	25	25	9	5.5	5	14	14	4	5.5	10.5	3	14
425641	CFM.50-SH-6-CLEAN	50	50	30	30	11.5	6.5	6	18	18	6	6.5	12.5	5	30
425741	CFM.60-SH-8-CLEAN	60	60	36	36	15	8.5	8	21	21	8	8.5	16.5	5	57

Suggested tightening torque for assembly screws.

www.METALIKA-KACIN.com

Spring hinges

for automatic return, SUPER-technopolymer

MATERIAL
Glass-fibre reinforced polyamide (PA) SUPER-technopolymer body, black colour, matte finish.

ROTATING PIN
Aluminium.
Pin housing end caps made out of acetal based (POM) technopolymer, black colour.

RETURN SPRING
Stainless steel.

STANDARD EXECUTIONS
Pass-through holes for M6 cylindrical head screws.
- **CFMR-NC-035**: max return torque 0.35Nm (at 180°), holding torque 0.12Nm (at 0°).
- **CFMR-NC-070**: max return torque 0.70Nm (at 180°), holding torque 0.25Nm (at 0°).
- **CFMR-NO-035**: max return torque 0.35Nm (at 0°), holding torque 0.12Nm (at 180°).
- **CFMR-NO-070**: max return torque 0.70Nm (at 0°), holding torque 0.25Nm (at 180°).
- **CFMR-NS**: complementary hinge, no return spring.

ROTATION ANGLE (APPROXIMATE VALUE)
Max 270° (-90° and +180° being 0° the condition where the two interconnected surfaces are on the same plane).
The hinge can reach -90 ° but this condition must not be used for CFMR-NO execution.
Do not exceed the rotation limit angle so as not to prejudice the correct operation of the return spring.
To choose the convenient type and the right number of hinges for your application, see the Guidelines (on page 1368).

FEATURES AND PERFORMANCES
CFMR hinge is used for the automatic re-closing or re-opening of the door by the return spring.
The torque varies progressively with the opening/closing angle of the hinge.
In special stress resistance tests, the return spring has exceeded 100,000 cycles while keeping the torque values unchanged.

	AXIAL STRESS	RADIAL STRESS	90° ANGLED STRESS
Resistance tests	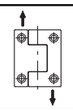		
	Max limit static load Sa [N]	Max limit static load Sr [N]	Max limit static load S90 [N]
CFMR.	2100	3500	1900

The max static load is the value above which the material may break thus prejudicing the hinge functionality. Obviously, a suitable factor, according to the importance and the safety level of the specific application must be applied to this value.

ELESA Original design

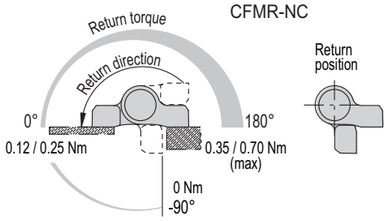

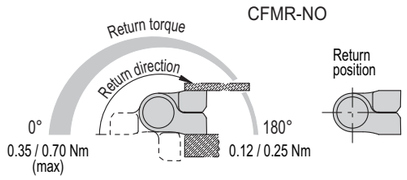

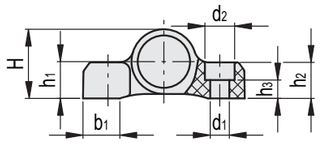

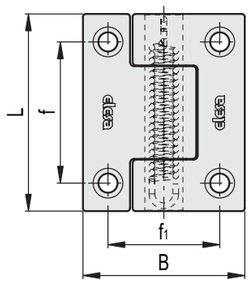

Code	Description	L	B	d1	d2	f	f1	H	h1	h2	h3	b1	C# [Nm]	⚖
425841	CFMR.67-NC-035	67	55	6.5	10	48	38	24	12.5	12.5	6.3	12.5	6	67
425845	CFMR.67-NC-070	67	55	6.5	10	48	38	24	12.5	12.5	6.3	12.5	6	67
425852	CFMR.67-NO-035	67	55	6.5	10	48	38	24	12.5	12.5	6.3	12.5	6	67
425855	CFMR.67-NO-070	67	55	6.5	10	48	38	24	12.5	12.5	6.3	12.5	6	67
425840	CFMR.67-NS	67	55	6.5	10	48	38	24	12.5	12.5	6.3	12.5	6	61

Suggested torque for screw assembly.

www.METALIKA-KACIN.com

Hinges

Technopolymer

MATERIAL
High-resilience polyamide based (PA) technopolymer, black colour, matte finish.

ROTATING PIN
AISI 303 stainless steel.

STANDARD EXECUTION
Pass-through holes for cylindrical head screws.

ROTATION ANGLE (APPROXIMATE VALUE)
Max 275° (-95° and +180° being 0° the condition where the two interconnected surfaces are on the same plane).
Do not exceed the rotation angle limit so as not to prejudice the hinge mechanical performance.
To choose the convenient type and the right number of hinges for your application, see the Guidelines (on page 1368).

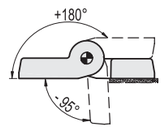

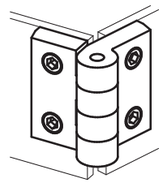

FMdesign

	AXIAL STRESS		RADIAL STRESS		90° ANGLED STRESS	
Resistance tests	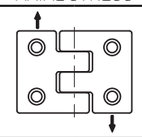		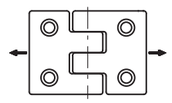		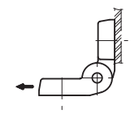	
Description	Maximum working load Ea [N]	Load at breakage Ra [N]	Maximum working load Er [N]	Load at breakage Rr [N]	Maximum working load E90 [N]	Load at breakage R90 [N]
CFH.50	200	2440	380	3830	190	1950

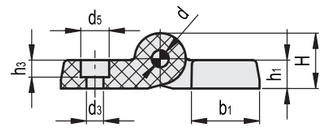

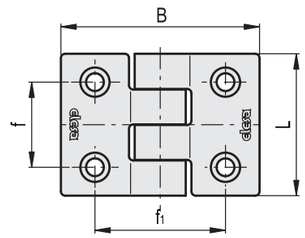

Code	Description	L	B	f±0.25	f1±0.25	H	h1	h3	b1	d	d3	d5	C# [Nm]	⚖
424021	CFH.50 CH-6	50	69.5	30	45.5	19.5	10	6.5	24	6	6.5	10	3	46
424031	CFH.50 CH-8	50	69.5	30	45.5	19.5	10	4.5	24	6	8.5	13	3	42

Suggested tightening torque for assembly screws.

www.METALIKA-KACIN.com

Tamperproof hinges

Technopolymer

MATERIAL
Glass-fibre reinforced polyamide based (PA) technopolymer, black colour, matte finish.

ROTATING PIN
AISI 303 stainless steel, totally moulded in the hinge body.

STANDARD EXECUTIONS
- **CFJ-B**: nickel-plated brass bosses with threaded hole.
- **CFJ-p**: nickel-plated steel threaded studs.
- **CFJ-EH**: pass-through holes for hexagonal head screws.
- **CFJ-B-SH**: nickel-plated brass bosses with threaded hole and pass-through holes for countersunk head screws.

FEATURES AND APPLICATIONS
The pin is totally moulded in the hinge body thus it cannot be extracted, preventing any hinge tampering.
This charatcteristic makes the hinge particularly suitable for mounting on structures or equipments requiring protection against intrusion.

ROTATION ANGLE (APPROXIMATE VALUE)
Max 275° (-95° and +180° being 0° the condition where the two interconnected surfaces are on the same plane).
Do not exceed the rotation angle limit so as not to prejudice the hinge mechanical performance.
To choose the convenient type and the right number of hinges for your application, see the Guidelines (on page 1368).

FMdesign

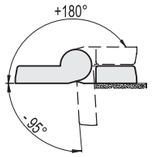

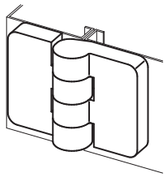

Resistance tests	AXIAL STRESS		RADIAL STRESS		90° ANGLED STRESS	
Description	Maximum working load Ea [N]	Load at breakage Ra [N]	Maximum working load Er [N]	Load at breakage Rr [N]	Maximum working load E90 [N]	Load at breakage R90 [N]
CFJ.50 B-M6	730	4170	2220	4450	710	2250
CFJ.50 p-M6x17	1420	4410	2180	4350	510	2220
CFJ.50 EH-6	1740	3470	1490	2970	460	2120
CFJ.50-R B-M6-SH-6	1480	2780	1310	2490	390	1900

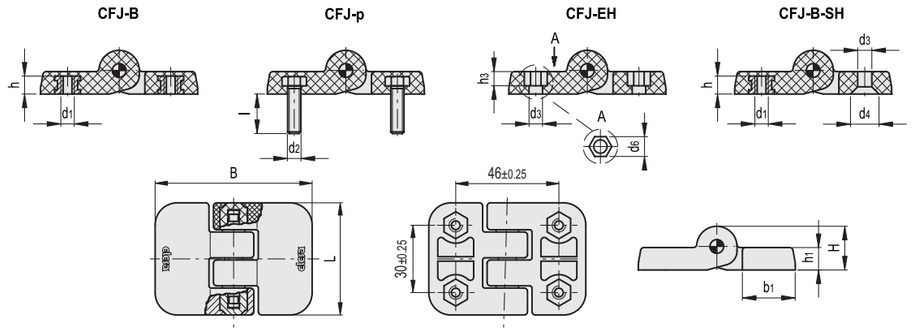

Code	Description	L	B	d1	h	d2	l	H	h1	h3	b1	d3	d4	d6	C [Nm] B#	C [Nm] p#	C [Nm] EH/ SH#	⚖
424611	CFJ.50 B-M6	50	70	M6	8	-	-	19.5	10	-	23.5	-	-	-	5	-	-	66
424621	CFJ.50 p-M6x17	50	70	-	-	M6	17	19.5	10	-	23.5	-	-	-	-	4	-	71
424631	CFJ.50 EH-6	50	70	-	-	-	-	19.5	10	5.5	23.5	6.5	-	10	-	-	5	46
424671	CFJ.50-R B-M6-SH-6	50	70	M6	8	-	-	19.5	10	-	23.5	6.5	12.5	-	5	-	3	54

Suggested tightening torque for assembly screws.

www.METALIKA-KACIN.com

Hinge with adjusting inserts

SUPER-technopolymer

MATERIAL
Glass-fibre reinforced polyamide based (PA) SUPER-technopolymer, black colour, matte finish.

ADJUSTING INSERTS
Technopolymer, black colour.

ROTATING PIN
AISI 303 stainless steel.

STANDARD EXECUTION
Pass-through holes for M6 countersunk-head screws.

FEATURES AND APPLICATIONS
The adjusting inserts are designed to compensate limited misalignments of doors. Vertical and horizontal adjustments are both possible by simply setting the orientation of the inserts, thus obtaining the perfect alignment between the door and the frame.
The knurling on the hinge body and on the rear of the inserts keep the precise position during the assembly of the hinge.
This hinge can be used to compensate vertical, horizontal or both misalignments.

ROTATION ANGLE (APPROXIMATE VALUE)
Max 260° (-90° and +170° being 0° the condition where the two interconnected surfaces are on the same plane).
Do not exceed the rotation angle limit so as not to prejudice the hinge mechanical performance.
To choose the convenient type and the right number of hinges for your application, see the Guidelines (on page 1368).

FMdesign

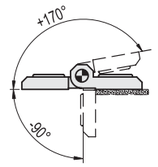

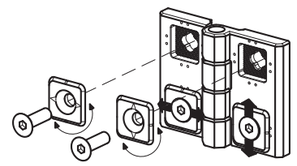

Resistance tests	AXIAL STRESS	RADIAL STRESS	90° ANGLED STRESS
	Max. limit stati load	Max. limit stati load	Max. limit stati load
Description	Sa [N]	Sr [N]	S90 [N]
CFR.60 SH-6	1800	2700	2130

The max static load is the value above which the material may break thus prejudicing the hinge functionality use. Obviously, a suitable factor, according to the importance and the safety level of the specific application must be applied to this value.

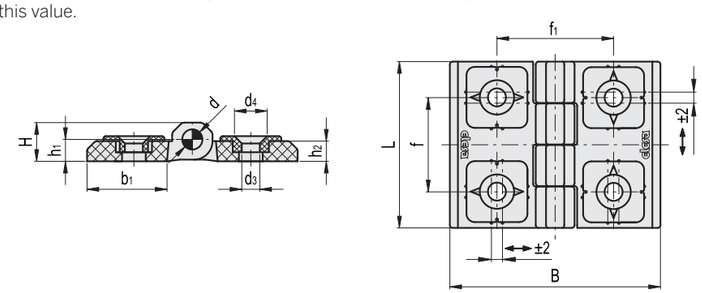

Code	Description	L	B	f	f1	H	h1	h2	b1	d	d3	d4	C# [Nm]	⚖
426431	CFR.60 SH-6	60	75	34	42	16	9.5	8	29.5	8	6.5	12.5	5	72

Suggested tightening torque for assembly screws.

www.METALIKA-KACIN.com

Hinges for thin doors

Technopolymer

RoHS PA +80° -20°

MATERIAL
High-resilience polyamide based (PA) technopolymer, black colour, matte finish.

ROTATING PIN
AISI 303 stainless steel.

STANDARD EXECUTIONS
- **CFD-B**: nickel-plated brass bosses with threaded hole.
- **CFD-p**: nickel-plated brass threaded studs in the wide body, nickel-plated steel threaded studs in the narrow body.
- **CFD-p-B**: nickel-plated brass threaded studs and nickel-plated brass bosses with threaded hole.
- **CFD-B-p**: nickel-plated brass bosses with threaded hole and nickel-plated steel threaded studs.
- **CFD-CH-B**: pass-through holes for cylindrical head screws and nickel-plated brass bosses with threaded hole.
- **CFD-CH-p**: pass-through holes for cylindrical head screws and nickel-plated steel threaded studs.

FEATURES AND APPLICATIONS
The hinge is made up of two bodies with different dimensions (a narrow one and a larger one) and can be assembled for example on structures with thin frame or door.

ROTATION ANGLE (APPROXIMATE VALUE)
Max 205° (-15° and +190° being 0° the condition where the two interconnected surfaces are on the same plane).
Do not exceed the rotation angle limit so as not to prejudice the hinge mechanical performance.
To choose the convenient type and the right number of hinges for your application, see the Guidelines (on page 1368).

FMdesign

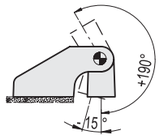

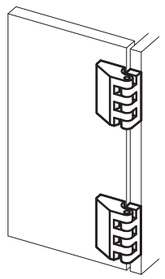

Resistance tests	AXIAL STRESS		RADIAL STRESS		90° ANGLED STRESS	
Description	Maximum working load Ea [N]	Load at breakage Ra [N]	Maximum working load Er [N]	Load at breakage Rr [N]	Maximum working load E90 [N]	Load at breakage R90 [N]
CFD.30 B-M3	60	690	70	490	60	500
CFD.30 p-M3x13	70	750	40	340	30	390
CFD.30 p-M3x13-B-M3	60	690	40	340	30	390
CFD.30 B-M3-p-M3x13	60	690	40	340	30	390
CFD.30 CH-3-B-M3	100	830	110	720	70	670
CFD.30 CH-3-p-M3x13	60	730	50	450	30	350
CFD.40 B-M4	160	1710	150	1340	100	700
CFD.40 p-M4x18	110	1230	140	880	50	730
CFD.40 p-M4x18-B-M4	110	1230	140	880	50	700
CFD.40 B-M4-p-M4x18	110	1230	140	880	50	700
CFD.40 CH-4-B-M4	120	1620	150	1220	130	1110
CFD.40 CH-4-p-M4x18	150	1480	140	820	100	860
CFD.48 B-M5	260	2440	260	1700	120	1640
CFD.48 p-M5x17	290	1770	240	1840	110	1740
CFD.48 p-M5x17-B-M5	260	1770	240	1700	110	1640
CFD.48 B-M5-p-M5x17	260	1770	240	1700	110	1640
CFD.48 CH-5-B-M5	330	2530	240	1890	290	1870
CFD.48 CH-5-p-M5x17	150	2170	120	1200	110	970
CFD.66 B-M6	450	4130	320	2520	220	2250
CFD.66 p-M6x16	470	3260	260	1700	240	1580
CFD.66 p-M6x16-B-M6	450	3260	260	1700	220	1580
CFD.66 B-M6-p-M6x16	450	3260	260	1700	220	1580
CFD.66 CH-6-B-M6	430	3660	410	2610	310	2830
CFD.66 CH-6-p-M6x16	350	3090	280	1770	180	1610

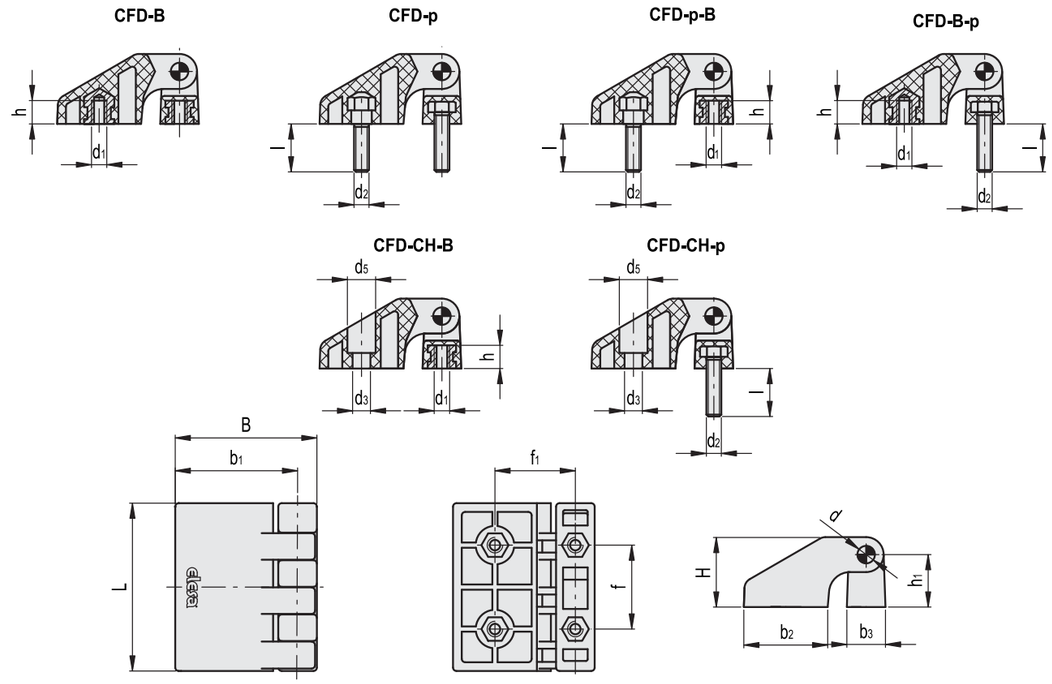

Code	Description	L	B	d1	h	d2	l	f±0.25	f1 ±0.25	H	h1	b1	b2	b3	d	d3	d5	C [Nm] B#	C [Nm] p#	C [Nm] CH#	⚖
422711	CFD.30 B-M3	30.5	26.5	M3	4	-	-	15	15	12.5	9.5	22.5	15	7	2.5	-	-	1	-	-	8
422721	CFD.30 p-M3x13	30.5	26.5	-	-	M3	13	15	15	12.5	9.5	22.5	15	7	2.5	-	-	-	1	-	11
422731	CFD.30 p-M3x13-B-M3	30.5	26.5	M3	4	-	13	15	15	12.5	9.5	22.5	15	7	2.5	-	-	1	1	-	10
422741	CFD.30 B-M3-p-M3x13	30.5	26.5	-	4	M3	13	15	15	12.5	9.5	22.5	15	7	2.5	-	-	1	1	-	9
422751	CFD.30 CH-3-B-M3	30.5	26.5	M3	4	-	-	15	15	12.5	9.5	22.5	15	7	2.5	3.5	6	1	-	0.5	7
422761	CFD.30 CH-3-p-M3x13	30.5	26.5	-	-	M3	13	15	15	12.5	9.5	22.5	15	7	2.5	3.5	6	-	1	0.5	8
422811	CFD.40 B-M4	40.5	34	M4	5.5	-	-	20	20.2	16.5	12.5	29.5	20	9.5	4	-	-	4	-	-	19
422821	CFD.40 p-M4x18	40.5	34	-	-	M4	18	20	20.2	16.5	12.5	29.5	20	9.5	4	-	-	-	1.5	-	26
422831	CFD.40 p-M4x18-B-M4	40.5	34	M4	5.5	M4	18	20	20.2	16.5	12.5	29.5	20	9.5	4	-	-	4	1.5	-	23
422841	CFD.40 B-M4-p-M4x18	40.5	34	-	5.5	M4	18	20	20.2	16.5	12.5	29.5	20	9.5	4	-	-	4	1.5	-	21
422851	CFD.40 CH-4-B-M4	40.5	34	M4	5.5	-	-	20	20.2	16.5	12.5	29.5	20	9.5	4	4.5	7.5	4	-	1	16
422861	CFD.40 CH-4-p-M4x18	40.5	34	-	-	M4	18	20	20.2	16.5	12.5	29.5	20	9.5	4	4.5	7.5	-	1.5	1	19
422911	CFD.48 B-M5	48.5	40.5	M5	6.5	-	-	24	23	20	15	35	24	11.5	5	-	-	5	-	-	33
422921	CFD.48 p-M5x17	48.5	40.5	-	-	M5	17	24	23	20	15	35	24	11.5	5	-	-	-	3	-	46
422931	CFD.48 p-M5x17-B-M5	48.5	40.5	M5	6.5	M5	17	24	23	20	15	35	24	11.5	5	-	-	5	3	-	41
422941	CFD.48 B-M5-p-M5x17	48.5	40.5	-	6.5	M5	17	24	23	20	15	35	24	11.5	5	-	-	5	3	-	38
422951	CFD.48 CH-5-B-M5	48.5	40.5	M5	6.5	-	-	24	23	20	15	35	24	11.5	5	5.5	9	-	-	2	27
422961	CFD.48 CH-5-p-M5x17	48.5	40.5	-	-	M5	17	24	23	20	15	35	24	11.5	5	5.5	9	-	3	2	31
423011	CFD.66 B-M6	66	56	M6	9	-	-	33	31.8	27.5	21	48.5	33	15	6	-	-	5	-	-	76
423021	CFD.66 p-M6x16	66	56	-	-	M6	16	33	31.8	27.5	21	48.5	33	15	6	-	-	-	5	-	95
423031	CFD.66 p-M6x16-B-M6	66	56	M6	9	M6	16	33	31.8	27.5	21	48.5	33	15	6	-	-	5	5	-	90
423041	CFD.66 B-M6-p-M6x16	66	56	-	9	M6	16	33	31.8	27.5	21	48.5	33	15	6	-	-	5	5	-	82
423051	CFD.66 CH-6-B-M6	66	56	M6	9	-	-	33	31.8	27.5	21	48.5	33	15	6	6.5	10.5	5	-	5	66
423061	CFD.66 CH-6-p-M6x16	66	56	-	-	M6	16	33	31.8	27.5	21	48.5	33	15	6	6.5	10.5	-	5	5	71

Suggested tightening torque for assembly screws.

www.METALIKA-KACIN.com

Hinges

Technopolymer

RoHS PA +80° -20°

MATERIAL
High-resilience polyamide based (PA) technopolymer, black colour, matte finish.

ROTATING PIN
AISI 303 stainless steel.

STANDARD EXECUTIONS
- **CFE-B**: nickel-plated brass bosses with threaded hole.
- **CFE-p**: nickel-plated brass threaded studs.
- **CFE-CH**: pass-through holes for cylindrical head screws.
- **CFE-B-p**: nickel-plated brass bosses with threaded hole and nickel-plated brass threaded studs.
- **CFE-B-CH**: nickel-plated brass bosses with threaded hole and pass-through holes for cylindrical head screws.
- **CFE-p-CH**: nickel-plated brass threaded studs and pass-through holes for cylindrical head screws.

APPLICATIONS
This hinge has been developed in particular for doors provided with gaskets.

ROTATION ANGLE (APPROXIMATE VALUE)
Max 200° (-80° and +120° being 0° the condition where the two interconnected surfaces are on the same plane).
Do not exceed the rotation angle limit so as not to prejudice the hinge mechanical performance.
To choose the convenient type and the right number of hinges for your application, see the Guidelines (on page 1368).

FMdesign

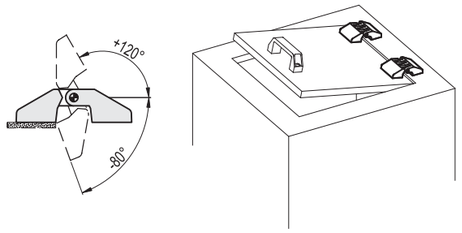

Resistance tests	AXIAL STRESS		RADIAL STRESS		90° ANGLED STRESS	
	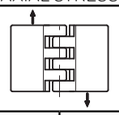				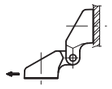	
Description	Maximum working load Ea [N]	Load at breakage Ra [N]	Maximum working load Er [N]	Load at breakage Rr [N]	Maximum working load E90 [N]	Load at breakage R90 [N]
CFE.30 B-M3	50	660	140	1040	50	310
CFE.30 p-M3x13	40	460	110	1040	60	560
CFE.30 CH-3	50	640	120	980	20	300
CFE.30 B-M3-p-M3x13	40	460	110	1040	50	310
CFE.30 B-M3-CH-3	50	640	120	980	20	300
CFE.30 p-M3x13-CH-3	40	460	110	980	20	300
CFE.40 B-M4	90	1110	230	1920	60	590
CFE.40 p-M4x18	90	1110	300	2440	60	590
CFE.40 CH-4	150	1580	370	2460	80	1210
CFE.40 B-M4-p-M4x18	90	1110	230	1920	60	590
CFE.40 B-M4-CH-4	90	1110	230	1920	60	590
CFE.40 p-M4x18-CH-4	90	1110	300	2440	60	590
CFE.48 B-M5	160	1260	440	2890	190	1290
CFE.48 p-M5x17	190	1900	310	2870	160	1190
CFE.48 CH-5	300	2160	410	2850	150	1440
CFE.48 B-M5-p-M5x17	160	1260	310	2870	160	1190
CFE.48 B-M5-CH-5	160	1260	410	2850	150	1290
CFE.48 p-M5x17-CH-5	190	1900	310	2850	150	1190
CFE.66 B-M6	530	4160	500	2480	310	2250
CFE.66 p-M6x16	240	2670	700	3490	270	1830
CFE.66 CH-6	440	3160	690	3450	260	2920
CFE.66 B-M6-p-M6x16	240	2670	500	2480	270	1830
CFE.66 B-M6-CH-6	440	3160	500	2480	260	2250
CFE.66 p-M6x16-CH-6	240	2670	690	3450	260	1830

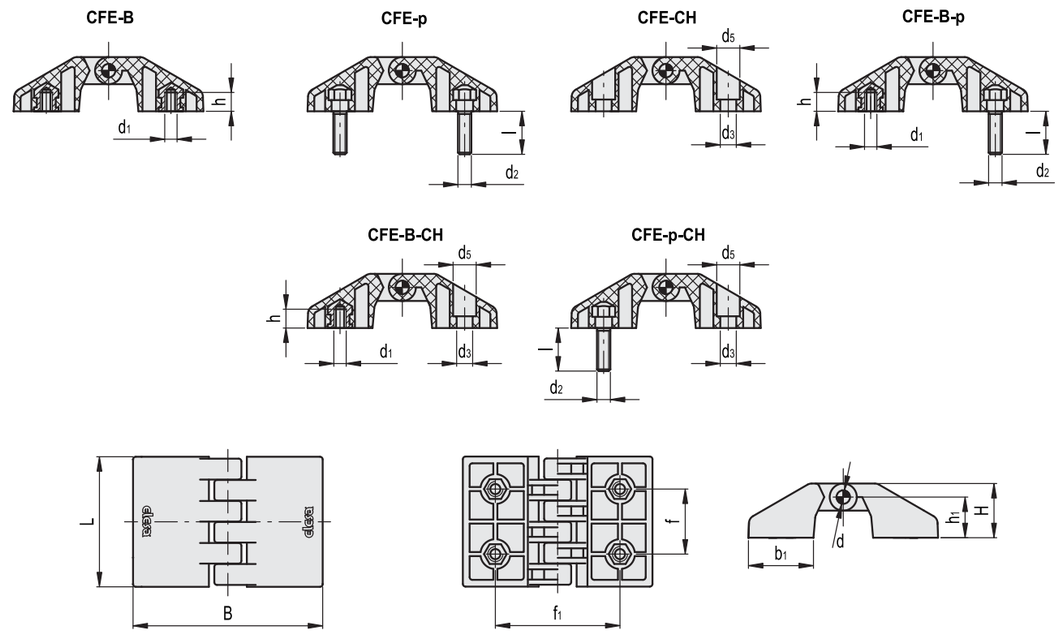

Code	Description	L	B	d1	h	d2	l	f±0.25	f1 ±0.25	H	h1	b1	d	d3	d5	C [Nm] B#	C [Nm] p#	C [Nm] CH#	⚖
423111	CFE.30 B-M3	30.5	45.5	M3	4	-	-	15	30	12.5	9.5	15	2.5	-	-	1	-	-	11
423121	CFE.30 p-M3x13	30.5	45.5	-	-	M3	13	15	30	12.5	9.5	15	2.5	-	-	-	1	-	14
423131	CFE.30 CH-3	30.5	45.5	-	-	-	-	15	30	12.5	9.5	15	2.5	3.5	6	-	-	0.5	8
423141	CFE.30 B-M3-p-M3x13	30.5	45.5	M3	4	M3	13	15	30	12.5	9.5	15	2.5	-	-	1	1	-	13
423151	CFE.30 B-M3-CH-3	30.5	45.5	M3	4	-	-	15	30	12.5	9.5	15	2.5	3.5	6	1	-	0.5	10
423161	CFE.30 p-M3x13-CH-3	30.5	45.5	-	-	M3	13	15	30	12.5	9.5	15	2.5	3.5	6	-	1	0.5	11
423211	CFE.40 B-M4	40.5	59	M4	5.5	-	-	20	40.4	16.5	12.5	20	4	-	-	4	-	-	26
423221	CFE.40 p-M4x18	40.5	59	-	-	M4	18	20	40.4	16.5	12.5	20	4	-	-	-	2	-	34
423231	CFE.40 CH-4	40.5	59	-	-	-	-	20	40.4	16.5	12.5	20	4	4.5	7.5	-	-	1	19
423241	CFE.40 B-M4-p-M4x18	40.5	59	M4	5.5	M4	18	20	40.4	16.5	12.5	20	4	-	-	4	2	-	30
423251	CFE.40 B-M4-CH-4	40.5	59	M4	5.5	-	-	20	40.4	16.5	12.5	20	4	4.5	7.5	4	-	1	21
423261	CFE.40 p-M4x18-CH-4	40.5	59	-	-	M4	18	20	40.4	16.5	12.5	20	4	4.5	7.5	-	2	1	26
423311	CFE.48 B-M5	48.5	70	M5	6.5	-	-	24	46	20	15	24	5	-	-	5	-	-	44
423321	CFE.48 p-M5x17	48.5	70	-	-	M5	17	24	46	20	15	24	5	-	-	-	5	-	58
423331	CFE.48 CH-5	48.5	70	-	-	-	-	24	46	20	15	24	5	5.5	9	-	-	2	31
423341	CFE.48 B-M5-p-M5x17	48.5	70	M5	6.5	M5	17	24	46	20	15	24	5	-	-	5	5	-	51
423351	CFE.48 B-M5-CH-5	48.5	70	M5	6.5	-	-	24	46	20	15	24	5	5.5	9	5	-	2	38
423361	CFE.48 p-M5x17-CH-5	48.5	70	-	-	M5	17	24	46	20	15	24	5	5.5	9	-	5	2	45
423411	CFE.66 B-M6	66	97	M6	10	-	-	33	63.7	27.5	21	33	6	-	-	5	-	-	103
423421	CFE.66 p-M6x16	66	97	-	-	M6	16	33	63.7	27.5	21	33	6	-	-	-	5	-	124
423431	CFE.66 CH-6	66	97	-	-	-	-	33	63.7	27.5	21	33	6	6.5	10.5	-	-	5	77
423441	CFE.66 B-M6-p-M6x16	66	97	M6	10	M6	16	33	63.7	27.5	21	33	6	-	-	5	5	-	115
423451	CFE.66 B-M6-CH-6	66	97	M6	10	-	-	33	63.7	27.5	21	33	6	6.5	10.5	5	-	5	90
423461	CFE.66 p-M6x16-CH-6	66	97	-	-	M6	16	33	63.7	27.5	21	33	6	6.5	10.5	-	5	5	100

Suggested tightening torque for assembly screws.

www.METALIKA-KACIN.com

Hinges for thin doors

Technopolymer

MATERIAL
High-resilience polyamide based (PA) technopolymer, black colour, matte finish.

ROTATING PIN
AISI 303 stainless steel.

STANDARD EXECUTIONS
- **CFF-B**: nickel-plated brass bosses with threaded hole.
- **CFF-p**: nickel-plated steel threaded studs.
- **CFF-B-p**: nickel-plated brass bosses with threaded hole and nickel-plated steel threaded studs.

ROTATION ANGLE (APPROXIMATE VALUE)
Max 200° (-10° and +190° being 0° the condition where the two interconnected surfaces are on the same plane).
Do not exceed the rotation angle limit so as not to prejudice the hinge mechanical performance.
To choose the convenient type and the right number of hinges for your application, see the Guidelines (on page 1368).

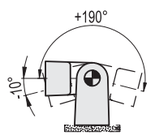

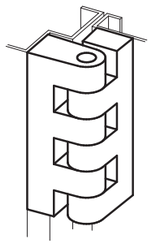

Resistance tests	AXIAL STRESS		RADIAL STRESS		RADIAL STRESS	
	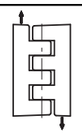		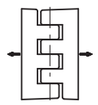			
Description	Maximum working load Ea [N]	Load at breakage Ra [N]	Maximum working load Er [N]	Load at breakage Rr [N]	Maximum working load E90 [N]	Load at breakage R90 [N]
CFF.30 B-M3	100	1030	150	1190	90	600
CFF.30 p-M3x13	120	900	160	1020	80	560
CFF.30 B-M3-p-M3x13	100	900	150	1020	80	560
CFF.40 B-M4	180	1780	290	1950	150	1160
CFF.40 p-M4x18	170	1490	140	1220	120	710
CFF.40 B-M4-p-M4x18	170	1490	140	1220	120	710
CFF.48 B-M5	370	3250	480	2890	150	1870
CFF.48 p-M5x17	220	2200	370	2480	140	1200
CFF.48 B-M5-p-M5x17	220	2200	370	2480	140	1200
CFF.66 B-M6	310	4660	860	4880	340	2770
CFF.66 p-M6x16	310	2410	590	3520	220	1420
CFF.66 B-M6-p-M6x16	310	2410	590	3520	220	1420

Polymer hinges www.metalika-kacin.com

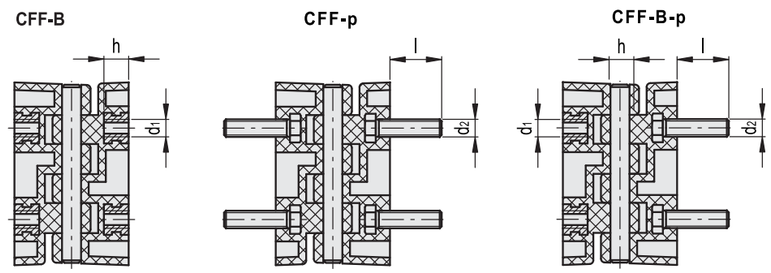

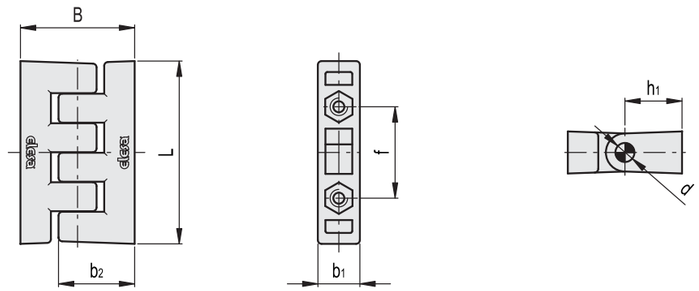

Code	Description	L	B	d1	h	d2	l	f±0.25	h1	b1	b2	d	C [Nm] B#	C [Nm] p#	⚖
423511	CFF.30 B-M3	30.5	19	M3	4	-	-	15	9	7	12.5	2.5	1	-	6
423521	CFF.30 p-M3x13	30.5	19	-	-	M3	13	15	9	7	12.5	2.5	-	0.5	8
423531	CFF.30 B-M3-p-M3x13	30.5	19	M3	4	M3	13	15	9	7	12.5	2.5	1	0.5	7
423611	CFF.40 B-M4	40.5	24	M4	5.5	-	-	20	12	9.5	16.5	4	4	-	14
423621	CFF.40 p-M4x18	40.5	24	-	-	M4	18	20	12	9.5	16.5	4	-	1.5	20
423631	CFF.40 B-M4-p-M4x18	40.5	24	M4	5.5	M4	18	20	12	9.5	16.5	4	4	1.5	17
423711	CFF.48 B-M5	48.5	30	M5	6.5	-	-	24	15	11.5	20	5	5	-	23
423721	CFF.48 p-M5x17	48.5	30	-	-	M5	17	24	15	11.5	20	5	-	4	33
423731	CFF.48 B-M5-p-M5x17	48.5	30	M5	6.5	M5	17	24	15	11.5	20	5	5	4	28
423811	CFF.66 B-M6	66	42	M6	9	-	-	33	21	15	27.5	6	5	-	54
423821	CFF.66 p-M6x16	66	42	-	-	M6	16	33	21	15	27.5	6	-	4	64
423831	CFF.66 B-M6-p-M6x16	66	42	M6	9	M6	18	33	21	15	27.5	6	5	4	59

Suggested tightening torque for assembly screws.

www.METALIKA-KACIN.com

Hinges for profiles

Technopolymer

MATERIAL
Glass-fibre reinforced polyamide based (PA) technopolymer, black or grey colour RAL 7040 (C33), matte finish.

ROTATING PIN
Nickel-plated steel.

STANDARD EXECUTION
Pass-through holes for M6 countersunk head screws.

TECHNOPOLYMER CENTERING INSERTS (SUPPLIED)
For profiles with slot dimensions from 6 to 12 mm.

FEATURES AND APPLICATIONS
This type of hinge can be used with aluminium profiles from 30 up to 60 mm, also combining different dimensions.

ROTATION ANGLE (APPROXIMATE VALUE)
Max 280° (-100° and +180° being 0° the condition where the two interconnected surfaces are on the same plane).
Do not exceed the rotation angle limit so as not to prejudice the hinge mechanical performance.
To choose the convenient type and the right number of hinges for your application, see the Guidelines (on page 1368).

FMdesign

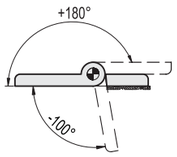

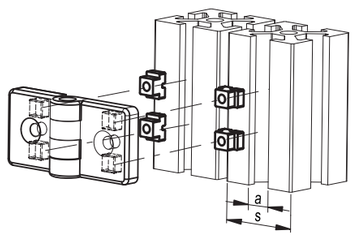

Profile dimension		Insert orientation	Insert colour
s	a		
30	6		Light grey
	8		
40÷45	8		Dark grey
	10		
50÷60	10		Black
	12		

Centering inserts			
Dimensions			Colour
l	l_1	l_2	
8	6	2	Light grey
10	8	4	Dark grey
12	10	5	Black

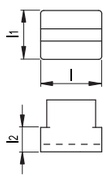

Resistance tests	AXIAL STRESS		RADIAL STRESS		90° ANGLED STRESS	
	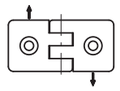		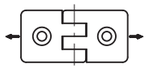		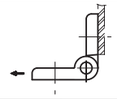	
Description	Maximum working load Ea [N]	Load at breakage Ra [N]	Maximum working load Er [N]	Load at breakage Rr [N]	Maximum working load E90 [N]	Load at breakage R90 [N]
CFG.30/30 SH-6	440	2570	1850	3710	300	1700
CFG.30/40 SH-6	320	2280	1750	3490	590	870
CFG.30/45 SH-6	240	2150	1760	3520	190	780
CFG.30/60 SH-6	280	1510	1600	3190	180	850
CFG.40/40 SH-6	320	2280	1750	3490	220	870
CFG.40/45 SH-6	240	2150	1750	3490	390	780
CFG.40/60 SH-6	280	1510	1600	3190	180	850
CFG.45/45 SH-6	240	2150	1760	3520	190	780
CFG.45/60 SH-6	240	1510	1600	3190	180	780
CFG.60/60 SH-6	280	1510	1600	3190	180	850

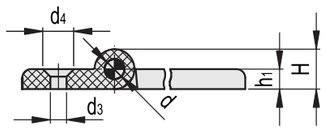

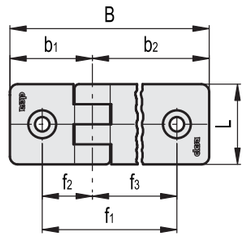

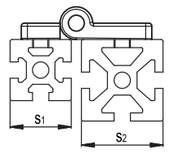

CFG.

Code	Description	s1	s2	L	B	f1 ±0.25	f2	f3	H	h1	b1	b2	d	d3	d4	C# [Nm]	⚖
423911	CFG.30/30 SH-6	30	30	36	54	35	17.5	17.5	16	8	27	27	8	6.5	12.5	5	32
423912	CFG.30/40 SH-6	30	40	36	64	40	17.5	22.5	16	8	27	37	8	6.5	12.5	5	34
423913	CFG.30/45 SH-6	30	45	36	69	42.5	17.5	25	16	8	27	42	8	6.5	12.5	5	35
423914	CFG.30/60 SH-6	30	60	36	84	50	17.5	32.5	16	8	27	57	8	6.5	12.5	5	38
423921	CFG.40/40 SH-6	40	40	36	74	45	22.5	22.5	16	8	37	37	8	6.5	12.5	5	36
423922	CFG.40/45 SH-6	40	45	36	79	47.5	22.5	25	16	8	37	42	8	6.5	12.5	5	37
423923	CFG.40/60 SH-6	40	60	36	94	55	22.5	32.5	16	8	37	57	8	6.5	12.5	5	40
423931	CFG.45/45 SH-6	45	45	36	84	50	25	25	16	8	42	42	8	6.5	12.5	5	38
423932	CFG.45/60 SH-6	45	60	36	99	57.5	25	32.5	16	8	42	57	8	6.5	12.5	5	41
423941	CFG.60/60 SH-6	60	60	36	114	65	32.5	32.5	16	8	57	57	8	6.5	12.5	5	45

CFG-C33

Code	Description	s1	s2	L	B	f1 ±0.25	f2	f3	H	h1	b1	b2	d	d3	d4	C# [Nm]	⚖
423911-C33	CFG.30/30 SH-6-C33	30	30	36	54	35	17.5	17.5	16	8	27	27	8	6.5	12.5	5	32
423912-C33	CFG.30/40 SH-6-C33	30	40	36	64	40	17.5	22.5	16	8	27	37	8	6.5	12.5	5	34
423913-C33	CFG.30/45 SH-6-C33	30	45	36	69	42.5	17.5	25	16	8	27	42	8	6.5	12.5	5	35
423914-C33	CFG.30/60 SH-6-C33	30	60	36	64	50	17.5	32.5	16	8	27	57	8	6.5	12.5	5	38
423921-C33	CFG.40/40 SH-6-C33	40	40	36	74	45	22.5	22.5	16	8	37	37	8	6.5	12.5	5	36
423922-C33	CFG.40/45 SH-6-C33	40	45	36	79	47.5	22.5	22.5	16	8	37	42	8	6.5	12.5	5	37
423923-C33	CFG.40/60 SH-6-C33	40	60	36	94	55	22.5	32.5	16	8	37	57	8	6.5	12.5	5	40
423931-C33	CFG.45/45 SH-6-C33	45	45	36	94	50	25	25	16	8	42	42	8	6.5	12.5	5	38
423932-C33	CFG.45/60 SH-6-C33	45	60	36	99	57.5	25	32.5	16	8	42	57	8	6.5	12.5	5	41
423941-C33	CFG.60/60 SH-6-C33	60	60	36	114	65	32.5	32.5	16	8	57	57	8	6.5	12.5	5	45

Suggested tightening torque for assembly screws.

www.METALIKA-KACIN.com

Double hinges for profiles

Technopolymer

MATERIAL
Glass-fibre reinforced polyamide based (PA) technopolymer, black or grey colour RAL 7040 (C33), matte finish.

ROTATING PINS
Nickel-plated steel.

STANDARD EXECUTION
Pass-through holes for M6 countersunk head screws.

TECHNOPOLYMER CENTERING INSERTS (SUPPLIED)
For profiles with slot dimensions from 6 to 12 mm.

FEATURES AND APPLICATIONS
This type of hinge is recommended when, for example, one central frame is connected with two lateral doors. It can be used with aluminium profiles from 30 up to 60 mm, also combining different dimensions.

ROTATION ANGLE (APPROXIMATE VALUE)
Max 260°/275° (-95° and +165°/180° being 0° the condition where the two interconnected surfaces are on the same plane).
Do not exceed the rotation angle limit so as not to prejudice the hinge mechanical performance.
To choose the convenient type and the right number of hinges for your application, see the Guidelines (on page 1368).

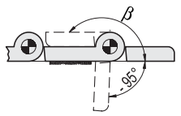

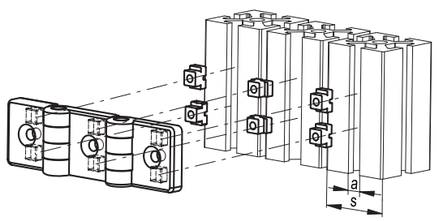

FMdesign

Profile dimension		Insert orientation	Insert colour
s	a		
30	6		Light grey
	8		
40÷45	8		Dark grey
	10		
50÷60	10		Black
	12		

Centering inserts			
Dimensions			Colour
l	l_1	l_2	
8	6	2	Light grey
10	8	4	Dark grey
12	10	5	Black

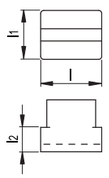

Polymer hinges www.metalika-kacin.com

Resistance tests	AXIAL STRESS		RADIAL STRESS		90° ANGLED STRESS	
Description	Maximum working load Ea [N]	Load at breakage Ra [N]	Maximum working load Er [N]	Load at breakage Rr [N]	Maximum working load E90 [N]	Load at breakage R90 [N]
CFI.30-30/30 SH-6	440	2570	1850	3710	300	1700
CFI.30-40/40 SH-6	320	2280	1750	3490	220	870
CFI.40-30/30 SH-6	320	2280	1750	3490	220	870
CFI.40-40/40 SH-6	320	2280	1750	3490	220	870
CFI.45-30/30 SH-6	240	2150	1760	3520	190	780
CFI.45-40/40 SH-6	240	2150	1750	3490	190	780
CFI.45-45/45 SH-6	240	2150	1760	3520	190	780
CFI.60-30/30 SH-6	280	1510	1600	3190	180	850
CFI.60-40/40 SH-6	280	1510	1600	3190	180	850
CFI.60-45/45 SH-6	240	1510	1600	3190	180	780

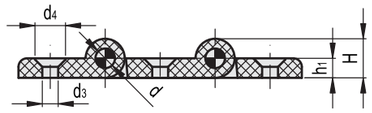

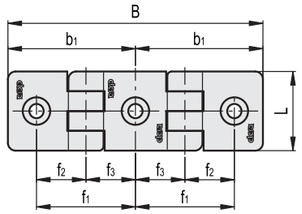

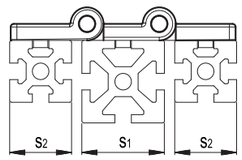

CFI.

Code	Description	s1	s2	L	B	f1 ±0.25	f2	f3	H	h1	b1	d	d3	d4	ß	C# [Nm]	⚖
424111	CFI.30-30/30 SH-6	30	30	36	89	35	17.5	17.5	16	8	44.5	8	6.5	12.5	180°	5	59
424121	CFI.30-40/40 SH-6	30	40	36	109	40	22.5	17.5	16	8	54.5	8	6.5	12.5	165°	5	63
424211	CFI.40-30/30 SH-6	40	30	36	99	40	17.5	22.5	16	8	49.5	8	6.5	12.5	180°	5	62
424221	CFI.40-40/40 SH-6	40	40	36	119	45	22.5	22.5	16	8	59.5	8	6.5	12.5	180°	5	66
424311	CFI.45-30/30 SH-6	45	30	36	104	42.5	17.5	25	16	8	52	8	6.5	12.5	180°	5	63
424321	CFI.45-40/40 SH-6	45	40	36	124	47.5	22.5	25	16	8	62	8	6.5	12.5	180°	5	67
424331	CFI.45-45/45 SH-6	45	45	36	134	50	25	25	16	8	67	8	6.5	12.5	180°	5	69
424411	CFI.60-30/30 SH-6	60	30	36	119	50	17.5	32.5	16	8	59.5	8	6.5	12.5	180°	5	67
424421	CFI.60-40/40 SH-6	60	40	36	139	55	22.5	32.5	16	8	69.5	8	6.5	12.5	180°	5	71
424431	CFI.60-45/45 SH-6	60	45	36	149	57.5	25	32.5	16	8	74.5	8	6.5	12.5	180°	5	73

CFI-C33

Code	Description	s1	s2	L	B	f1 ±0.25	f2	f3	H	h1	b1	d	d3	d4	ß	C# [Nm]	⚖
424111-C33	CFI.30-30/30 SH-6-C33	30	30	36	89	35	17.5	17.5	16	8	44.5	8	6.5	12.5	180°	5	59
424121-C33	CFI.30-40/40 SH-6-C33	30	40	36	109	40	22.5	17.5	16	8	54.5	8	6.5	12.5	180°	5	63
424211-C33	CFI.40-30/30 SH-6-C33	40	30	36	99	40	17.5	22.5	16	8	49.5	8	6.5	12.5	180°	5	62
424221-C33	CFI.40-40/40 SH-6-C33	40	40	36	119	45	22.5	22.5	16	8	59.5	8	6.5	12.5	180°	5	66
424311-C33	CFI.45-30/30 SH-6-C33	45	30	36	104	42.5	17.5	25	16	8	52	8	6.5	12.5	180°	5	63
424321-C33	CFI.45-40/40 SH-6-C33	45	40	36	124	47.5	22.5	25	16	8	52	8	6.5	12.5	180°	5	67
424331-C33	CFI.45-45/45 SH-6-C33	45	45	36	134	50	25	25	16	8	67	8	6.5	12.5	180°	5	69
424411-C33	CFI.60-30/30 SH-6-C33	60	30	36	119	50	17.5	32.5	16	8	59.5	8	6.5	12.5	180°	5	67
424421-C33	CFI.60-40/40 SH-6-C33	60	40	36	139	55	22.5	32.5	16	8	69.5	8	6.5	12.5	180°	5	71
424431-C33	CFI.60-45/45 SH-6-C33	60	45	36	149	57.5	25	32.5	16	8	74.5	8	6.5	12.5	180°	5	73

Suggested tightening torque for assembly screws.

Hinge for thin doors

Technopolymer

RoHS PA +80° -20°

MATERIAL
Glass-fibre reinforced polyamide based (PA) technopolymer, black colour, matte finish.

ROTATING PIN
AISI 303 stainless steel.

STANDARD EXECUTION
Pass-through holes for M6 countersunk head screws and referring pins for an accurate positioning of the hinge body.

ROTATION ANGLE (APPROXIMATE VALUE)
Max 200° (-10° and +190° being 0° the condition where the two interconnected surfaces are on the same plane).
Do not exceed the rotation angle limit so as not to prejudice the hinge mechanical performance.
To choose the convenient type and the right number of hinges for your application, see the Guidelines (on page 1368).

ASSEMBLY INSTRUCTIONS
1. Remove the rotation pin and fit the two separated bodies of the hinge on the door and on the frame.
2. Assembly the two elements together matching the right alignment of the hinge and insert the rotation pin.

FMdesign

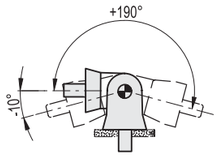

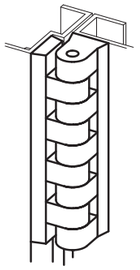

Resistance tests	AXIAL STRESS		RADIAL STRESS		90° ANGLED STRESS	
Description	Maximum working load Ea [N]	Load at breakage Ra [N]	Maximum working load Er [N]	Load at breakage Rr [N]	Maximum working load E90 [N]	Load at breakage R90 [N]
CFB.108 SH-6	610	6020	640	5020	520	2200

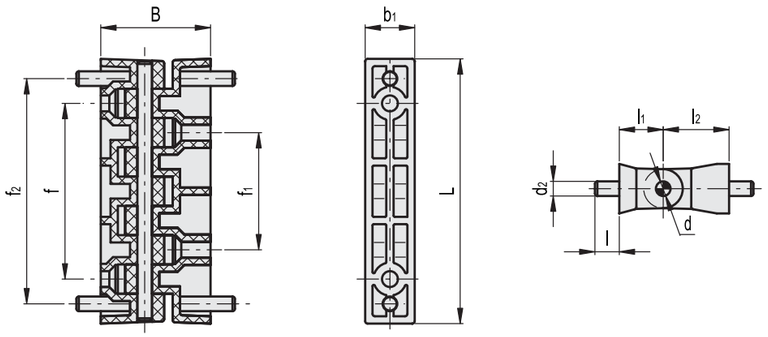

Code	Description	L	B	d2	l	f±0.25	f1 ±0.25	f2 ±0.25	l1	l2	b1	d	Th-rough holes	C# [Nm]	⚖
422511	CFB.108 SH-6	109	45	6	10	72.5	48.2	92.7	18	27	20.5	6	6.5	3	85

Suggested tightening torque for assembly screws.

Polymer hinges www.metalika-kacin.com

Thin hinge

Technopolymer

RoHS PA +80° -20°

MATERIAL
Glass-fibre reinforced polyamide based (PA) technopolymer, black colour, matte finish.

ROTATION PIN AND END-CAPS
Acetal resin based (POM) technopolymer.

STANDARD EXECUTION
Pass-through holes for self-tapping countersunk head screws diameter 4.8 mm.

FEATURES AND APPLICATIONS
Completely made of technopolymer and without metal parts, the hinge is suitable for application on machines and equipment in those sectors where laws or particular hygienic, climatic and environmental factors make it mandatory to use corrosion resistant materials.
By replacing the technopolymer rotation pin with a metal one with an appropriate form, the hinge is suitable to control a safety micro switch mounted on the structure where the hinge is situated.

ROTATION ANGLE (APPROXIMATE VALUE)
CFC. hinges have a max rotation angle of 325°. Depending on the type of assembly, the rotation angle of the door can be lower.
Do not exceed the rotation angle limit so as not to prejudice the hinge mechanical performance.
To choose the convenient type and the right number of hinges for your application, see the Guidelines (on page 1368).

FMdesign

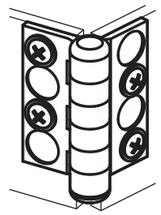

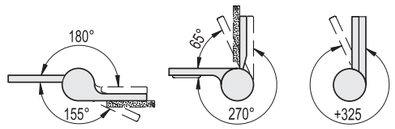

Resistance tests	AXIAL STRESS		RADIAL STRESS		90° ANGLED STRESS	
Description	Maximum working load Ea [N]	Load at breakage Ra [N]	Maximum working load Er [N]	Load at breakage Rr [N]	Maximum working load E90 [N]	Load at breakage R90 [N]
CFC.55 SH-5	750	1500	890	1770	180	270

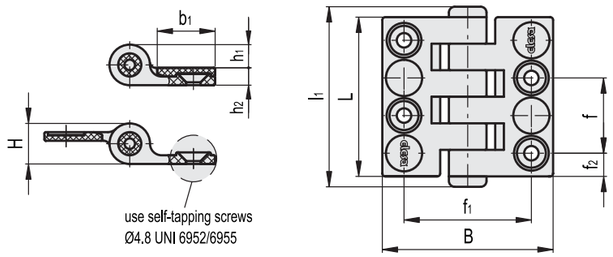

Code	Description	L	B	f±0.25	f1 ±0.25	f2	H	h1	h2	l1	b1	Through holes	C# [Nm]	⚖
422611	CFC.55 SH-5	55	59	26.1	43.7	8	14	8	6	62	20	4.8	5	20

Suggested tightening torque for assembly screws.

www.METALIKA-KACIN.com

In line lift-off hinges

Technopolymer

MATERIAL
Glass-fibre reinforced polyamide based (PA) technopolymer, black colour, matte finish.

AJUSTABLE PIN WITH OCTAGONAL SLOT
Acetal based (POM) technopolymer, black colour.

STANDARD EXECUTIONS
- **CFN-B**: nickel-plated brass bosses with threaded hole.
- **CFN-p**: nickel-plated steel threaded studs.
- **CFN-B-p**: nickel-plated brass bosses with threaded hole and nickel-plated steel threaded studs.
- **CFN-p-B**: nickel-plated steel threaded studs and nickel-plated brass bosses with threaded hole.

FEATURES
CFN. in line lift-off hinges have been designed to adjust possible misalignments between the door and the frame. To choose the convenient type and the right number of hinges for your application, see the Guidelines (on page 1368).

RoHS PA +80° -20°

FMdesign

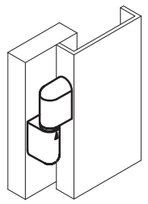

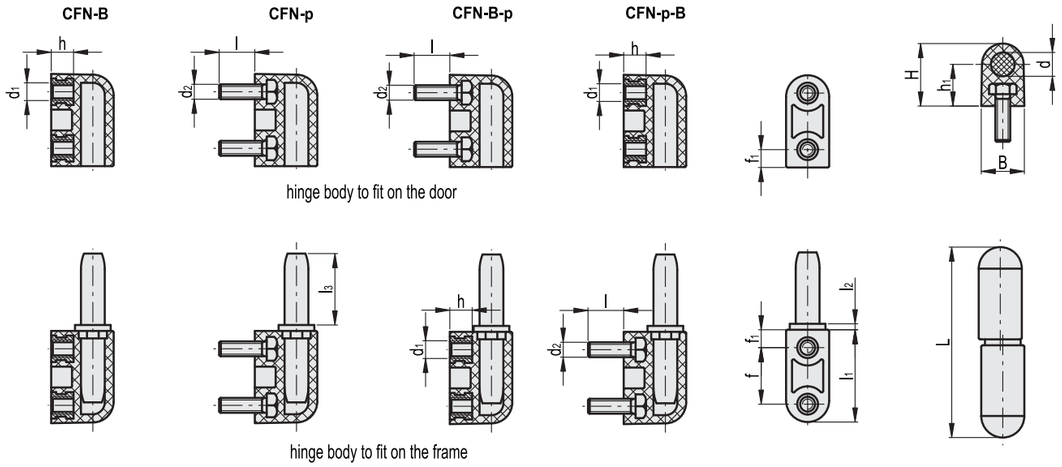

Code	Description	L	B	d1	h	d2	l	f	f1	H	h1	l1	l2	l3	d	C# [Nm]	⚖
426111	CFN.65 B-M5	64	14.5	M5	8	-	-	19	6	21	14	31	2	24	8	5	24
426121	CFN.65 p-M5x12	64	14.5	-	-	M5	12	19	6	21	14	31	2	24	8	5	30
426131	CFN.65 B-M5-p-M5x12	64	14.5	M5	8	M5	12	19	6	21	14	31	2	24	8	5	27
426141	CFN.65 p-M5x12-B-M5	64	14.5	M5	8	M5	12	19	6	21	14	31	2	24	8	5	27

Suggested tightening torque for assembly screws.

Resistance tests			
AXIAL STRESS		RADIAL STRESS	
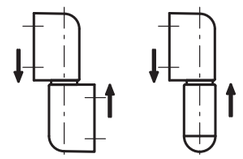		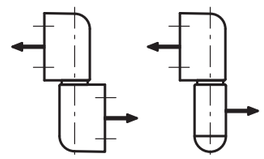	
Parallel planes	Perpendicular planes	Parallel planes	Perpendicular planes
Maximum working load Ea [N]		Maximum working load Er [N]	
590		200	

The elastic deformation, which occurs on the hinge for values of load exceeding the ones indicated in the table, makes the load at breakage meaningless.

ASSEMBLY INSTRUCTIONS
1. Fit the hinge bodies with octagonal slot on the frame and the other two bodies with cylindrical slot on the door.
2. Insert the pins with octagonal slot in the two bodies fitted on the frame by matching the indexes engraved on the pin and on the hinge.
3. Mount the door by matching the hinge bodies on the pins.

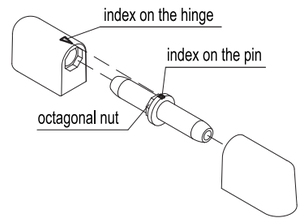

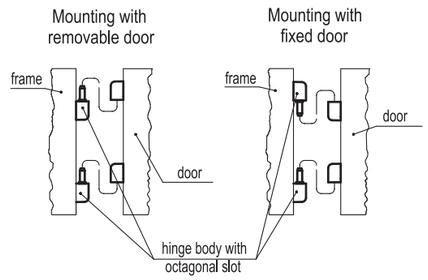

OFF LINE ADJUSTMENTS
The pin has an octagonal slot which allows different positions for the adjustment of off line door (fig. 1-2-3-4). To have the door in line with the frame, it can be necessary to adjust the pins of both hinges.

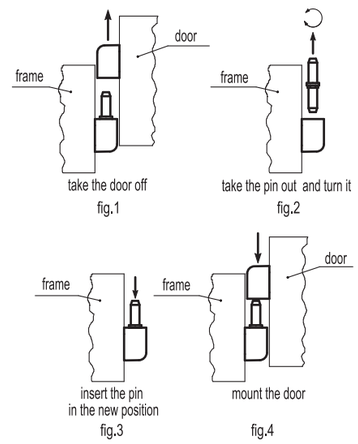

ADJUSTMENT OF THE DOOR
In case the door is off line with the frame, the inclination of the door can be adjusted by turning the octagonal slot of the pins clockwise or anticlockwise.
By turning the pin anticlockwise, the distance S increases (+0.5) while by turning the pin clockwise, it decreases (-0.5).

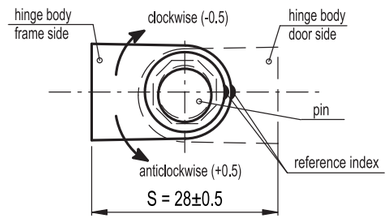

ADJUSTMENT EXAMPLES
If the door is off line on the bottom side.
In order to have the door in line with the frame, turn the pin of hinge 1 anticlockwise by 45° or 90° and the pin of hinge 2 clockwise.
If the door is off line on the top side.
In order to have the door in line with the frame, turn the pin of hinge 1 clockwise by 45° or 90° and the pin of hinge 2 anticlockwise.

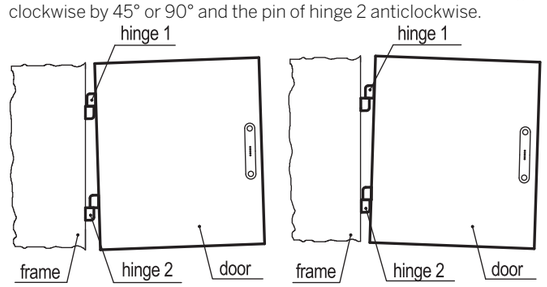

www.METALIKA-KACIN.com

Offset lift-off hinge

Technopolymer

MATERIAL
Glass-fibre reinforced polyamide based (PA) technopolymer, black colour, matte finish.

AJUSTABLE PIN WITH OCTAGONAL SLOT
Acetal based (POM) technopolymer, black colour.

SCREW-COVERS
Polyester based (PBT) technopolymer, black colour, glossy finish, snap-in assembly.

COVERS FOR PIN SLOT
Technopolymer, black colour, matte finish; to be fitted after assembly.

HINGE ASSEMBLY ON FRAME AND DOOR
Pass-through holes for hexagonal head screws, cylindrical head screws with hexagon socket or M5 hexagonal nuts (UNI 5588).

FEATURES AND APPLICATIONS
CFO. offset lift-off hinges have been designed to adjust possible misalignments between the door and the frame. They can be mounted on doors which open on the right or on the left side. Each body of the hinge has a slot for fitting the pin: the opposite side can be closed with the supplied cover.
To choose the convenient type and the right number of hinges for your application, see the Guidelines (on page 1368).

SPECIAL EXECUTIONS ON REQUEST
Screw-covers in different RAL colours.

RoHS PA +80° -20°

FMdesign

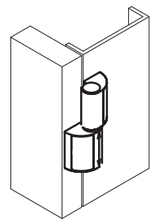

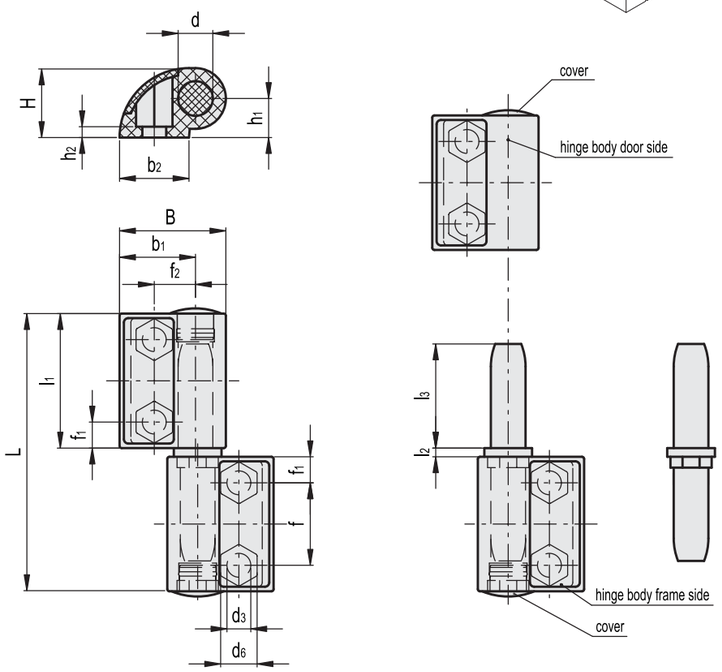

Code	Description	L	B	f	f1	f2	H	h1	h2	l1	l2	l3	b1	b2	d	d3	d6	C# [Nm]	⚖
426211-C9	CFO.65 EH-5-C9	64	24.5	19	6	9.5	16	9	2.5	31	2	24	17.5	16	8	5.5	8.5	5	25

Suggested tightening torque for assembly screws.

Resistance tests			
AXIAL STRESS		RADIAL STRESS	
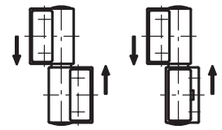		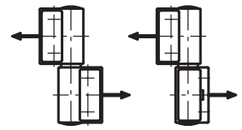	
Parallel planes	Perpendicular planes	Parallel planes	Perpendicular planes
Maximum working load Ea [N]		Maximum working load Er [N]	
290		200	

The elastic deformation, which occurs on the hinge for values of load exceeding the ones indicated in the table, makes the load at breakage meaningless.

ASSEMBLY INSTRUCTIONS
1. Fit the hinge bodies with octagonal slot on the frame and the other two bodies with cylindrical slot on the door.
2. Insert the pins with octagonal slot in the two bodies fitted on the frame by matching the indexes engraved on the pin and on the hinge.
3. Mount the door by matching the hinge bodies on the pins.

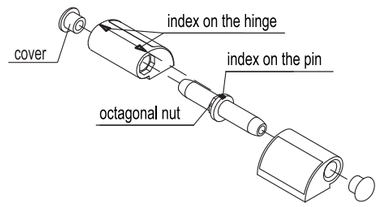

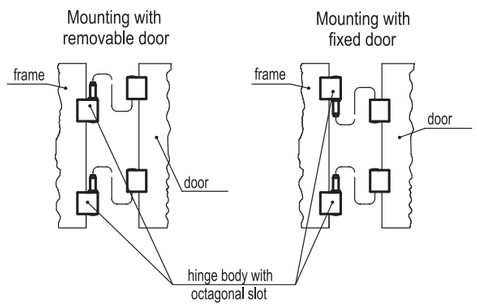

OFF LINE ADJUSTMENTS
The pin has an octagonal slot which allows different positions for the adjustment of off line door (fig. 1-2-3-4). To have the door in line with the frame, it can be necessary to adjust the pins of both hinges.

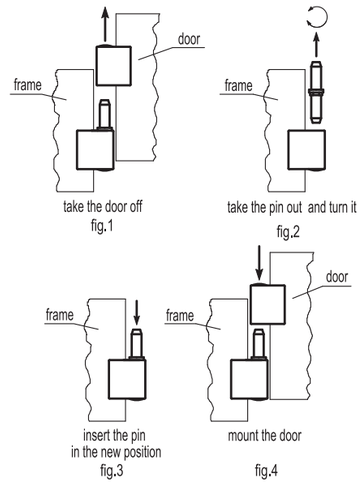

ADJUSTMENT OF THE DOOR
In case the door is off line with the frame, the inclination of the door can be adjusted by turning the octagonal slot of the pins clockwise or anticlockwise.
By turning the pin anticlockwise, the distance S increases (+0.5) while by turning the pin clockwise, it decreases (-0.5).

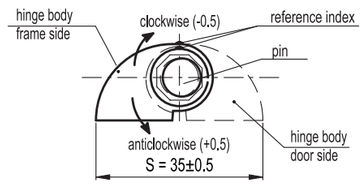

ADJUSTMENT EXAMPLES
If the door is off line on the bottom side.
In order to have the door in line with the frame, turn the pin of hinge 1 anticlockwise by 45° or 90° and the pin of hinge 2 clockwise.
If the door is off line on the top side.
In order to have the door in line with the frame, turn the pin of hinge 1 anticlockwise by 45° or 90° and the pin of hinge 2 clockwise.

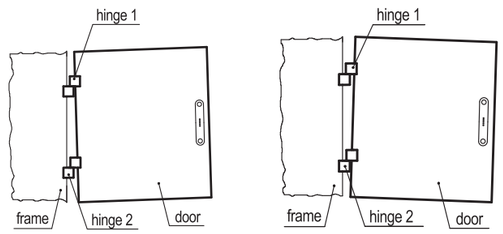

www.METALIKA-KACIN.com

Hinges for removable doors

SUPER-technopolymer

MATERIAL
Glass-fibre reinforced polyamide based (PA) SUPER-technopolymer, black colour, matte finish.

ROTATING PIN
Self-lubricating glass-fibre reinforced polyamide based (PA) technopolymer, black colour.

STANDARD EXECUTIONS
Pass-through holes for countersunk head screws.
- **CFMY-D**: rotation pin fitted on the right hinge body.
- **CFMY-S**: rotation pin fitted on the left hinge body.

ROTATION ANGLE (APPROXIMATE VALUE)
Max 270° (-90° and +180° being 0° the condition where the two interconnected surfaces are on the same plane).
Do not exceed the rotation angle limit so as not to prejudice the hinge mechanical performance.
To choose the convenient type and the right number of hinges for your application, see the Guidelines (on page 1368).

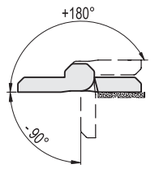

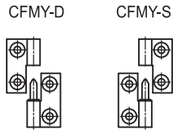

Resistance tests	AXIAL STRESS	RADIAL STRESS	90° ANGLED STRESS
	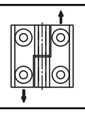	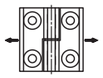	
Description	Max limit static load Sa [N]	Max limit static load Sr [N]	Max limit static load S90 [N]
CFMY.60	2050	1600	1250

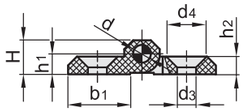

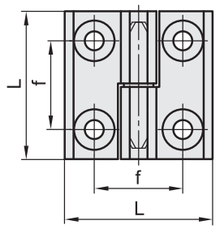

Code	Description	L	f±0.25	H	h1	h2	b1	d	d3	d4	C# [Nm]	⚖
425981	CFMY.40 SH-4-D	40	25	9	5.5	5	14	4	4.5	8.5	3	14
425982	CFMY.40 SH-4-S	40	25	9	5.5	5	14	4	4.5	8.5	3	14
425971	CFMY.50 SH-6-D	50	30	11.5	6.5	6	18	6	6.5	12.5	5	30
425972	CFMY.50 SH-6-S	50	30	11.5	6.5	6	18	6	6.5	12.5	5	30
425965	CFMY.60 SH-6-D	60	36	15	8.5	8	26	6	6.5	12.5	5	41
425966	CFMY.60 SH-6-S	60	36	15	8.5	8	26	6	6.5	12.5	5	41
425961	CFMY.60-SH-8-D	60	36	15	8.5	8	26	8	8.5	16.5	5	41
425962	CFMY.60-SH-8-S	60	36	15	8.5	8	26	8	8.5	16.5	5	41

Suggested tightening torque for assembly screws.

www.METALIKA-KACIN.com

Polymer hinges www.metalika-kacin.com

Hinges with snap-in positions

screw-covers, technopolymer

MATERIAL
Acetal resin based (POM) technopolymer, black colour, matte finish.

ROTATING PIN
Acetal based (POM) technopolymer, black colour.

SCREW-COVERS
Polyester based (PBT) technopolymer, black colour, matte finish, snap-in assembly.

STANDARD EXECUTIONS
- **CFP-SH**: pass-through holes for countersunk head screws.
- **CFP-CH**: pass-through holes for cylindrical head screws.
- **CFP-EH**: pass-through holes for hexagonal head screws.

ROTATION ANGLE (APPROXIMATE VALUE)
- Max 195° (-15° and +180° being 0° the condition where the interconnected surfaces are on the same plane).
- Do not exceed the rotation angle limit so as not to prejudice the hinge mechanical performance.
- This hinge can be used combined with the hinge type CFQ. with the same design, without detent position.
- The detent device allows four different detent positions of the door (0°, +80°, +120°, +170°).
- To choose the convenient type and the right number of hinges for your application, see the Guidelines (on page 1368).

RESISTANT TORQUE
All detent positions guarantee a resistant torque of about 1.1 Nm (which is the torque that must be applied to free the detent device of the hinge).
The hinge had been tested with more than 10.000 opening and closing cycles and the value of the resistant torque was unchanged.

FMdesign

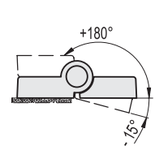

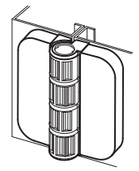

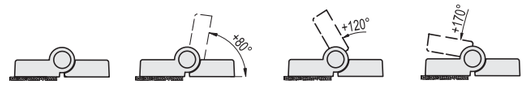

AXIAL STRESS		RADIAL STRESS		80° AND 90° ANGLED STRESS		120° ANGLED STRESS		170° ANGLED STRESS		Resistant torque
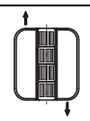		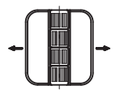								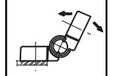
Maximum working load Ea [N]	Load at breakage Ra [N]	Maximum working load Er [N]	Load at breakage Rr [N]	Maximum working load E80 e E90 [N]	Load at breakage R80 e R90 [N]	Maximum working load E120 [N]	Load at breakage R120 [N]	Maximum working load E170 [N]	Load at breakage R170 [N]	[Nm]
300	1220	350	1970	345	620	285	855	400	1410	1.1

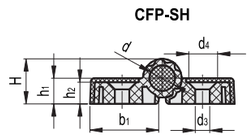

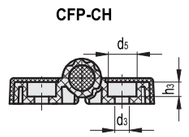

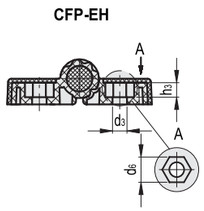

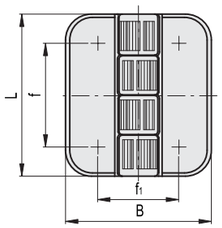

Code	Description	L	B	f	f1	H	h1	h2	h3	b1	d	d3	d4	d5	d6	C# [Nm]	⚖
426311-C9	CFP.50 SH-4-C9	50	45	32	25	14	8	7	-	21.5	8	4.5	8.5	-	-	1.5	17
426312-C9	CFP.50 CH-4-C9	50	45	32	25	14	8	7	4.5	21.5	8	4.5	-	8.5	-	1.5	17
426313-C9	CFP.50 EH-4-C9	50	45	32	25	14	8	7	4.5	21.5	8	4.5	-	-	7	1.5	17

Suggested tightening torque for assembly screws.

www.METALIKA-KACIN.com

Hinges with snap-in positions

Technopolymer

MATERIAL
Glass-fibre reinforced polyamide based (PA) technopolymer, black colour, matte finish.

ROTATING PIN
AISI 303 stainless steel.

STANDARD EXECUTIONS
- **CFV-SH**: pass-through holes for countersunk head screws.
- **CFV-EH**: pass-through holes for hexagonal head screws.

ROTATION ANGLE (APPROXIMATE VALUE)
Max 210° (-90° and +120° being 0° the condition where the interconnected surfaces are on the same plane).
Do not exceed the rotation angle limit so as not to prejudice the hinge mechanical performance.
The detent device allows four different detent positions of the door (-90°, 0°, +70°, +115°).
To choose the convenient type and the right number of hinges for your application, see the Guidelines (on page 1368).

RESISTANT TORQUE
All detent positions guarantee a resistant torque of about 3 Nm (which is the torque that must be applied to free the detent device of the hinge).
The hinge had been tested with more than 20.000 opening and closing cycles and the value of the resistant torque was unchanged.

FM design

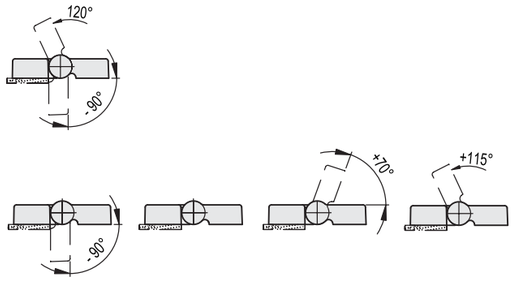

Resistance tests	AXIAL STRESS		RADIAL STRESS		70° e 115° ANGLED STRESS		90° ANGLED STRESS		Resistant torque
	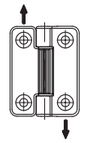		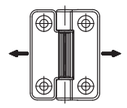		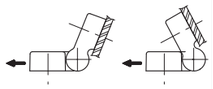		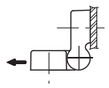		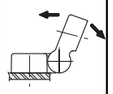
Description	Maximum working load Ea [N]	Load at breakage Ra [N]	Maximum working load Er [N]	Load at breakage Rr [N]	Maximum working load E70 E115 [N]	Load at breakage R70 R115 [N]	Maximum working load E90 [N]	Load at breakage R90 [N]	[Nm]
CFV.65 SH-6	1320	4480	2070	5060	2150	3170	1630	3380	3
CFV.65 EH-6	1520	3840	1940	4900	1430	3660	970	3140	3

CFV-SH

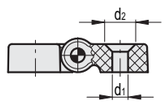

CFV-EH

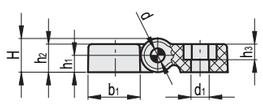

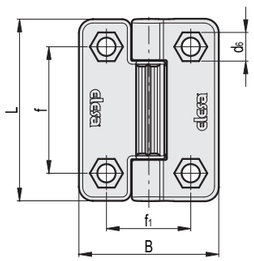

Code	Description	L	B	f	f1	H	h1	h2	h3	b1	d	d1	d2	d6	C# [Nm]	⚖
427626	CFV.65 SH-6	65	49.5	45	30	12	6	10	-	18.5	5	6.5	12.5	-	4	38
427621	CFV.65 EH-6	65	49.5	45	30	12	6	10	5	18.5	5	6.5	-	10	4	38

Suggested tightening torque for assembly screws.

Hinges with adjustable friction

Technopolymer

MATERIAL
Acetal based (POM) technopolymer. Flammability class UL94-HB.

PIN
Polycarbonate based (PC) technopolymer, black colour (white for CLEAN execution). Flammability class UL94-V2.

ADJUSTING BOSS AND SCREW
AISI 304 stainless steel screw.
AISI 303 stainless steel adjusting boss.

STANDARD EXECUTIONS
Assembly by means of pass-through holes for cylindrical head screws.
- **CFU**: black colour, matte finish.
- **CFU-CLEAN**: white colour similar to RAL 9002, matte finish.

FEATURES AND APPLICATIONS
The main feature of CFU. hinge is the possibility to adjust the resistant torque of the door on which it is assembled, facilitating the door clamping in the various positions of opening, partial opening and closing.
To adjust the friction force, simply turn the screw on the hinge body, clockwise to increase the friction and anti-clockwise to reduce it.

ROTATION ANGLE (APPROXIMATE VALUE)
Max 275° (-95° and +180° being 0° the condition where the two interconnected surfaces are on the same plane).
Do not exceed the rotation angle limit so as not to prejudice the hinge mechanical performance.

RESISTANT TORQUE
The resistant torque values of 1.4 and 4 Nm can be obtained by applying a maximum tightening torque of 0.8 Nm (CFU.40) and 4 Nm (CFU.60) on the adjusting screw.
The hinge had been tested with more than 60.000 opening and closing cycles and the values of the resistant torque was unchanged.
To choose the convenient type and the right number of hinges for your application, see the Guidelines (on page 1368).

ELESA Original design

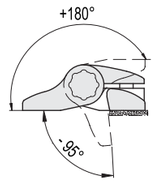

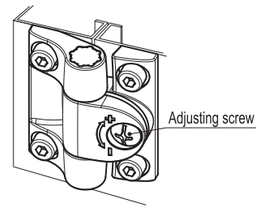

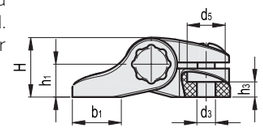

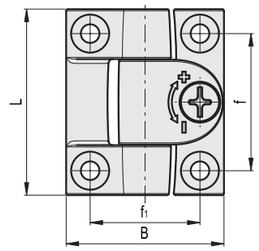

Code	Description	Code	Description	L	B	f±0.25	f1 ±0.25	H	h1	h3	b1	d3	d5	C# [Nm]	⚖
427512	CFU.40 CH-4	427513	CFU.40 CH-4 CLEAN	43	36.5	31.7	25.5	14	7.5	3.5	11.5	4.5	9	1	26
427522	CFU.60 CH-6	427523	CFU.60 CH-6 CLEAN	63.5	56.5	47.5	38	21	11.5	6.5	17.5	6.5	12.5	3	49

Suggested tightening torque for assembly screws.

Resistance tests	AXIAL STRESS		RADIAL STRESS		90° ANGLED STRESS		Resistant torque
	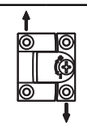		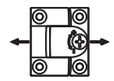		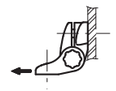		
Description	Maximum working load Ea [N]	Load at breakage Ra [N]	Maximum working load Er [N]	Load at breakage Rr [N]	Maximum working load E90 [N]	Load at breakage R90 [N]	[Nm]
CFU.40 CH-4	700	1100	1400	1800	500	1000	1.4
CFU.60 CH-6	1500	2350	2250	3200	1500	2500	4

Hinges
with built-in safety switch

SUPER-technopolymer

ELESA Original design

MATERIAL

- **Hinge body**: self-extinguish high-rigidity SUPER-technopolymer, black or grey colour RAL 7040 (C33).
- **Rotation pin**: glass-fibre reinforced polyamide-based tecnopolymer (PA), black or grey colour RAL 7040 (C33).
- **Assembly kit** (see assembly instructions):
  - n°4 technopolymer covers (fig.3).
  - n°4 technopolymer bushings (fig.4 and fig.5).
  - n°2 thermoplastic elastomer safety plugs (fig.7) to guarantee IP67 protection class.
- **Switch**: four slow action electrical contacts with double interruption Zb shaped (see IEC EN 60947-5-1) wich can be set in normally open (NO) or normally closed (NC) mode in production.

Positive opening in compliance with IEC EN 60947-5-1 annex K: the separation of the electrical contacts is the direct result of an actuator action on which an action force is applied by means of non elastic elements, that is to say not dependant on, for example, spring-like elements.

The contact elements guarantee a self-cleaning action of the silver-alloy pastes.

Thanks to its housing made out of SUPER-technopolymer, the CFSW hinge guarantees the double insulation of the internal circuits, therefore there is no need of grounding connection. Furthermore, the housing protects the electric contacts from shocks, atmospheric agents and accidental penetration of tools.

STANDARD EXECUTIONS

CFSW. hinge must be mounted with the side containing the microswitch on the fixed part (frame structure) and the other side on the movable part (door). The executions shown below refer to the hinges with the micro-switch on the right side.

- **C-A**: 8 pole male connector, top axial output.
- **C-C**: 8 pole male connector, bottom axial output.
- **C-B**: 8 pole male connector, back output.
- **F-A**: 2 or 5 m cable, 8 conductors, top axial output.
- **F-C**: 2 or 5 m cable, 8 conductors, bottom axial output.
- **F-B**: 2 or 5 m cable, 8 conductors, back output.
- **FC-B**: 0,2 m cable, with 8 pole male connector, back output.

Cable type: UL/CSA STYLE 2587 8 X AWG 22.

Contact blocks in the standard execution:

- **NO-NC-NO-NC**: 2 NO contacts + 2 NC contacts.
- **NO-NC-NC-NC**: 1 NO contact + 3 NC contacts.

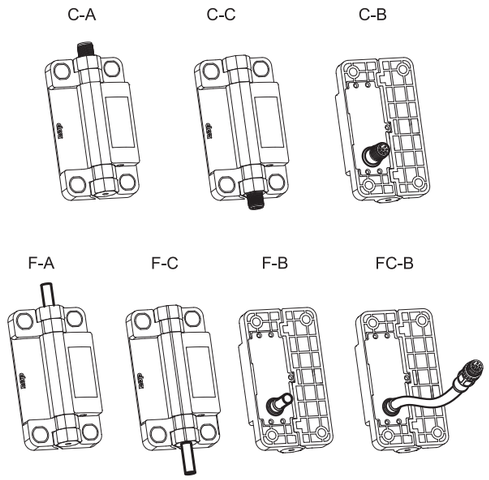

FEATURES AND APPLICATIONS

- Hinge with built-in multiple switch is a safety device because in case of accidental opening of doors, machine protections, or safety doors on machines and production equipment, it automatically breaks off the power supply hence protecting the operators.
- This hinge can be subject to frequent cleaning cycles and can be used in any situation or environment where a special attention to cleaning and hygiene is requested, thanks to the IP67 protection class and the use of stainless steel elements for closing the hinge body.
- Limited size, different assembly and output options (cable/connector) make this product easy to install on the most common aluminium profiles (30 mm minimum wide).
- Easy to assemble: the built-in safety multiple switch and the hinge come in one piece offering a very easy and fast assembly. This is a big advantage in comparison with some traditional systems which require to set up separately a hinge and a safety switch connected by a special pin to replace the standard pin of the hinge.
- Universal usage: CFSW. hinges can be assembled on the most common aluminium profiles.
- By using a redundant system, the CFSW hinges allow to have a system design up to SIL3 in compliance with IEC 62061, PLe in compliance with EN ISO 13849-1 or security category 4 in compliance with EN 954-1 with redundant structure.

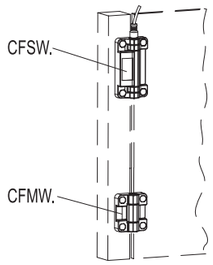

ACCESSORIES ON REQUEST

- FC.M12x1: extensions with 8 pole M12 female axial connector.
- PMW. (see page 1433): assembly plate on T-slot profiles.

SPECIAL EXECUTIONS ON REQUEST

- Operating angle of the hinge other than from 0° to 180°, every 15°, where the system frame/door requires a special execution.
- NC and NO contact blocks setting (up to 4 NC).
- NO and NC ovelapping contacts.

ASSEMBLY INSTRUCTIONS

CFSW. hinge can be assembled in three different modes:

- With M6 UNI 5933 ISO 10642 countersunk-head screw (not supplied) and screw cover supplied in the kit (fig. 3) to avoid free access to screws.
- With cylindrical-head screw with hexagon socket M6 UNI 5931 ISO 4762 (not supplied) to set with the bushing supplied in the kit (fig.4).
- With M6 UNI 5588 ISO 4032 nut (not supplied) and the bushing supplied in the kit (fig.5). This kind of assembly makes the hinge totally tamper-proof preventing any tampering.
- Fit the hinge side with the built-in microswitch on the fixed part (the frame) and the other side on the door.
- Leave the least clearance between the holes in the mounting walls and the diameter of the setscrews (Max 0.5 mm). The suggested tightening torque should not be exceeded: 5 Nm.
- The hinge must not be used as a mechanical end-stroke either for door maximum opening or for closed door. For this purpose we recommend using external mechanical stops to prevent the door from opening completely against the hinge body assembled on the frame (fig.1) or exceeding the angle where the two interconnected surfaces are on the same plane (fig.2).
- CFSW. hinge is generally assembled with one or more complementary hinges CFMW. (on page 1434) . In case of horizontal door opening or of a limited weight it is possible to use one hinge only.
- The connection cables must always be protected against mechanical damages.

CONTACTS AND CABLES

The built-in safety switch is available with 4 contacts which can be set in production in the normally closed NC or normally open NO mode.

- NC contact with positive opening is mainly used for safety applications. The use of more than one NC switches reduces the risk of error of the single commutation.
- NO contact can be used simultaneously with the NC contact thanks to their electrical separation. The use of NO together with NC contacts guarantees a safety diversification.
- Cable with M12x1 connector following the shown circuit scheme.

ROTATION ANGLE (APPROXIMATE VALUE)

Max 180° (0° and +180° being 0° the condition where the two interconnected surfaces are on the same plane fig.1). The switching angle (see Built-in safety multiple switch functioning and maintenance) is guaranteed from this position. The condition where the two interconnected surfaces are on the same plane is to be strictly verified because the hinge must not be stressed by any negative angle (fig. 2).

Cable/connector/extension* wiring
*(see accessory on request)

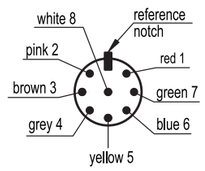

Fig.1

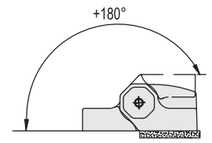

Fig.2

Fig.3 Fig.4 Fig.5

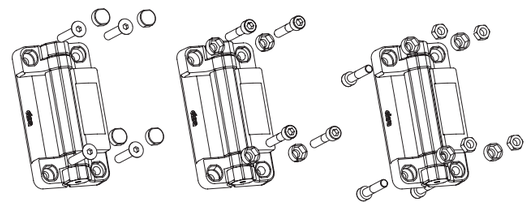

Drilling template

CFSW-C-A
CFSW-C-C
CFSW-F-A
CFSW-F-C

CFSW-F-B
CFSW-C-B
CFSW-FC-B

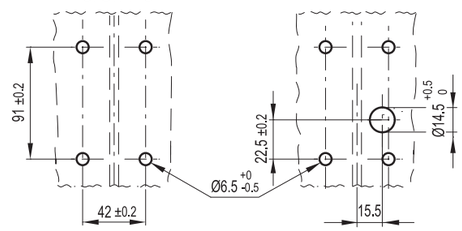

Approved by IMQ CA02.04800
In compliance with: EN 60947-1/2007+ EN 60947-5-1 : 2004 + A1/2009
Low voltage control auxiliaries
Approved by UL: E360222

Double insulation

Positive opening in compliance with EN 60947-5-1

Category of usage (values approved by IMQ)		**CFSW-C..** (connector)	**CFSW-F..** (cable)
AC15 standard IEC 60947-5-1 Typical applications: electromagnetic load controls in alternating current	24 V	-	4 A
	120 V	-	4 A
	250 V	-	4 A
	400 V	-	4 A
DC13 standard IEC 60947-5-2 Typical applications: electromagnet controls in direct current	24 V	2 A	2 A
	125 V	-	0.4 A
	250 V	-	0.3 A

Remark: the category of usage AC 15 2A 24V may be applied to CFSW-C.., even though this category is not certified by IMQ, since it is not provided for the standards in use.

BUILT-IN SAFETY MULTIPLE SWITCH FUNCTIONING AND MAINTENANCE

- The operating angle (see travel diagram) is set at 5° (we suggest to check it according to UNI EN ISO 13857).
- To guarantee the safety protection function, the hinge must be able to turn at least by 11° (see travel diagram), equivalent to the forced opening of the NC contacts by the actuator (positive opening).
- The adjustment of the operating angle can be modified, in case of doors with large dimensions, till 1° of width before the start up of the hinge by means of a screwdriver turning the assembly screw clockwise (fig.6).

After the adjustment is done, the safety plug must be fit (not removable) to guarantee protection class IP67 (fig.7).

The functioning points shown in the travel diagram undergo the same variation as the operating angle (ex: operating angle 1°, positive operating angle 7°).

Under normal conditions of use, when the mechanical life of the device is over, the operating angle can get to 3° from the starting angle.

- We suggest to check prior to the start up and then periodically the proper functioning of the CFSW. hinge.

When the protection is opened the machine must immediately stop. When the protection is opened at any degrees, the machine must not be able to start.

WARNINGS

- The choice and use of CFSW. hinge is the responsibility of the customer who will check that the relevant application is compliant to the safety regulations in force in the actual operating conditions.
- Using CFSW. hinges always implies a full knowledge of and compliance with the safety regulations in force, including UNI EN ISO 13849-1, IEC EN 60204-1, UNI EN ISO 14119 and EN ISO 12100.
- The hinge must always be assembled and connected by qualified operators who have to check regularly the hinge perfect functioning.
- The hinge with built-in safety switch CFSW. must not be used in environments with frequent temperature changes which can cause condensation, in the presence of explosive or flammable gasses and must always be protected by a proper fuse (see Electrical features table).
- The structure of CFSW hinge must not be modified and the back cover has never to be removed: an improper installation or tampering of the hinge with built-in safety switch can make the protection ineffective and cause serious damages.
- During handling and storage the shown environmental conditions have to be observed.

Category of usage (values approved by UL)	**CFSW-F-A CFSW-F-C CFSW-F-B** (cable)			**CFSW-C-A CFSW-C-C CFSW-C-B** (connector)
C 300 AC control	120 V	1.5 A	Therm. current 2.5 A	24 V / 2 A limited voltage-limited current / class 2 circuit
	240 V	0.75 A		
Q 300 DC control	125 V	0.55 A	Therm. current 2.5 A	
	250 V	0.27 A		

Fig.6

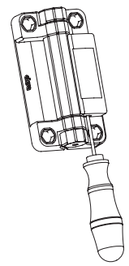

Fig.7

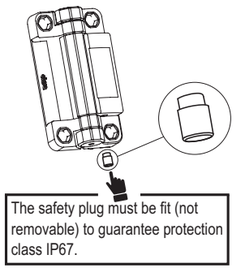

Stroke diagram **2NO+2NC** (production setting)

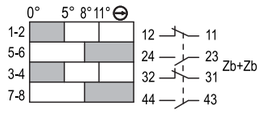

Stroke diagram **1NO+3NC** (production setting)

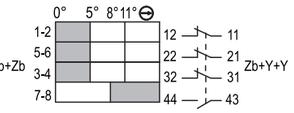

The diagrams refer to the hinge with the operating angle set in production.
The operating angle can be reduced (max. adjustment: 4°).

How to read the diagram

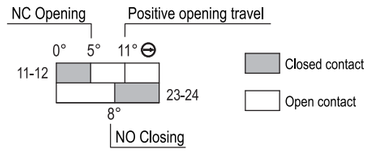

Mechanical features (values approved by IMQ)	**Electrical features** (values approved by IMQ)	
Type of contacts: Ag 999	Thermic power Ith	Cable 4 A
		Connector 2.5 A
Maximum working frequence: 600 cycles/hour *	Short-circuit protection: 4A 500V gG	
Mechanical life-span (test carried in compliance with IEC EN 60947-5-1 regulation): 10^6	Seal voltage at nominal pulse	Cable 4 Kv
		Connector 2.5 Kv
	Insulation nominal UI voltage	Cable: 400 Vac
		Connector: 30 Vac/Vdc
Protection class of the housing EN60529: IP67 *	Minimum force (torque for positive opening of contact): 0.5 Nm	
Speed of operation: minimum 2° / sec., maximum 90° / sec.	Short circuit conditioned current: 1000 A	
	Pollution degree: 3	
	B10d = 2000000	
	Tm = 20 years	

* A cycle of operations is equivalent to one closure and one opening as required by the standard EN60947-5-1.

** Fit the safety plug to guarantee IP67 protection (fig.7)

For CFSW-C..(connector) it is the customer's responsibility to check the protection class guaranteed by the connector of the cable used.

www.METALIKA-KACIN.com

Polymer hinges www.metalika-kacin.com

CFSW-C-A
CFSW-C-C

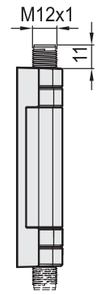

CFSW-C-B

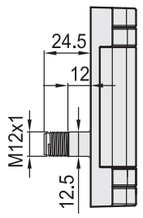

CFSW-F-A
CFSW-F-C

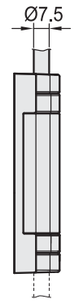

CFSW-F-B

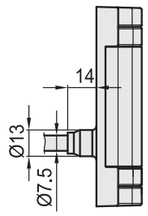

CFSW-FC-B

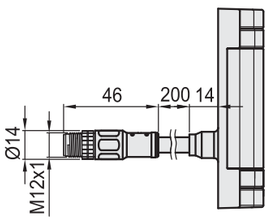

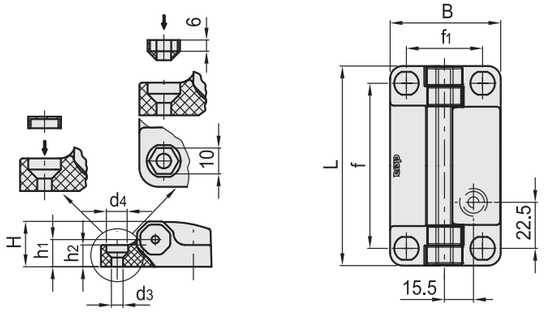

Code	Description	Code	Description	L	B	f	f1	H	h1	h2	d3	d4	C# [Nm]	⚖
426601	CFSW.110-6-2NO+2NC-C-A	426601-C33	CFSW.110-6-2NO+2NC-C-A-C33	110	60	91±0.242	±0.2	25	15	12	6.5	12	5	150
426602	CFSW.110-6-2NO+2NC-C-C	426602-C33	CFSW.110-6-2NO+2NC-C-C-C33	110	60	91±0.242	±0.2	25	15	12	6.5	12	5	150
426603	CFSW.110-6-2NO+2NC-C-B	426603-C33	CFSW.110-6-2NO+2NC-C-B-C33	110	60	91±0.242	±0.2	25	15	12	6.5	12	5	150
426611	CFSW.110-6-2NO+2NC-F-A-2	426611-C33	CFSW.110-6-2NO+2NC-F-A-2-C33	110	60	91±0.242	±0.2	25	15	12	6.5	12	5	280
426612	CFSW.110-6-2NO+2NC-F-C-2	426612-C33	CFSW.110-6-2NO+2NC-F-C-2-C33	110	60	91±0.242	±0.2	25	15	12	6.5	12	5	280
426613	CFSW.110-6-2NO+2NC-F-B-2	426613-C33	CFSW.110-6-2NO+2NC-F-B-2-C33	110	60	91±0.242	±0.2	25	15	12	6.5	12	5	280
426615	CFSW.110-6-2NO+2NC-F-A-5	426615-C33	CFSW.110-6-2NO+2NC-F-A-5-C33	110	60	91±0.242	±0.2	25	15	12	6.5	12	5	475
426616	CFSW.110-6-2NO+2NC-F-C-5	426616-C33	CFSW.110-6-2NO+2NC-F-C-5-C33	110	60	91±0.242	±0.2	25	15	12	6.5	12	5	475
426617	CFSW.110-6-2NO+2NC-F-B-5	426617-C33	CFSW.110-6-2NO+2NC-F-B-5-C33	110	60	91±0.242	±0.2	25	15	12	6.5	12	5	475
426619	CFSW.110-6-2NO+2NC-FC-B	426619-C33	CFSW.110-6-2NO+2NC-FC-B-C33	110	60	91±0.242	±0.2	25	15	12	6.5	12	5	475
426661	CFSW.110-6-1NO+3NC-C-A	426661-C33	CFSW.110-6-1NO+3NC-C-A-C33	110	60	91±0.242	±0.2	25	15	12	6.5	12	5	150
426662	CFSW.110-6-1NO+3NC-C-C	426662-C33	CFSW.110-6-1NO+3NC-C-C-C33	110	60	91±0.242	±0.2	25	15	12	6.5	12	5	150
426663	CFSW.110-6-1NO+3NC-C-B	426663-C33	CFSW.110-6-1NO+3NC-C-B-C33	110	60	91±0.242	±0.2	25	15	12	6.5	12	5	150
426671	CFSW.110-6-1NO+3NC-F-A-2	426671-C33	CFSW.110-6-1NO+3NC-F-A-2-C33	110	60	91±0.242	±0.2	25	15	12	6.5	12	5	280
426672	CFSW.110-6-1NO+3NC-F-C-2	426672-C33	CFSW.110-6-1NO+3NC-F-C-2-C33	110	60	91±0.242	±0.2	25	15	12	6.5	12	5	280
426673	CFSW.110-6-1NO+3NC-F-B-2	426673-C33	CFSW.110-6-1NO+3NC-F-B-2-C33	110	60	91±0.242	±0.2	25	15	12	6.5	12	5	280
426675	CFSW.110-6-1NO+3NC-F-A-5	426675-C33	CFSW.110-6-1NO+3NC-F-A-5-C33	110	60	91±0.242	±0.2	25	15	12	6.5	12	5	475
426676	CFSW.110-6-1NO+3NC-F-C-5	426676-C33	CFSW.110-6-1NO+3NC-F-C-5-C33	110	60	91±0.242	±0.2	25	15	12	6.5	12	5	475
426677	CFSW.110-6-1NO+3NC-F-B-5	426677-C33	CFSW.110-6-1NO+3NC-F-B-5-C33	110	60	91±0.242	±0.2	25	15	12	6.5	12	5	475
426679	CFSW.110-6-1NO+3NC-FC-B	426679-C33	CFSW.110-6-1NO+3NC-FC-B-C33	110	60	91±0.242	±0.2	25	15	12	6.5	12	5	475

Suggested tightening torque for assembly screws.

www.METALIKA-KACIN.com

	AXIAL STRESS	RADIAL STRESS	90° ANGLED STRESS
Resistance tests	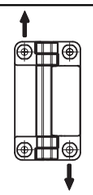	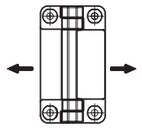	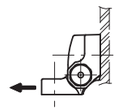
Description	Max limit static load Sa [N]	Max limit static load Sr [N]	Max limit static load S90 [N]
CFSW.110	2100	2800	1300

For CFSW. hinges with built-in safety multiple switch, the reference value supplied is the max limit static load (Sa, Sr, S90), since these hinges can be used as safety devices. Above this value, the material may break, thus prejudicing the hinge functionality. Obviously a suitable factor, according to the importance and safety level of the specific application, must be applied to this value. The load values shown in the tables of the different hinges are the result of tests carried out in our laboratories under controlled temperature and humidity (23°C-50% R.H.), under given conditions of use and for a limited period of time.

Example of suitability check

P = weight of the door [N]
P_1 = additional extra load [N]
W = width of the door
D = distance [metres] between the centre of gravity of the door and the hinge axis. In normal conditions D = W/2
D_1 = distance [metres] between the hinge axis and the additional extra load application point
N = number of hinges
k = safety factor
d_T = sum of the distances (metres) of all the hinges from the hinge of reference ($d_T = d_1 + d_2 + ... + dn$). In case of only two hinge assembled, d_T is simply the distance between them.

Conditions to be checked in order to ensure a correct functioning with two or more hinges.

$$\frac{(P+P1)}{N} \cdot k < Sa$$

$$\frac{[(P \cdot D)+(P1 \cdot D1)]}{d_T} \cdot k < Sr$$

$$\frac{[(P \cdot D)+(P1 \cdot D1)]}{d_T} \cdot k < S90$$

Hinged door on a vertical axis

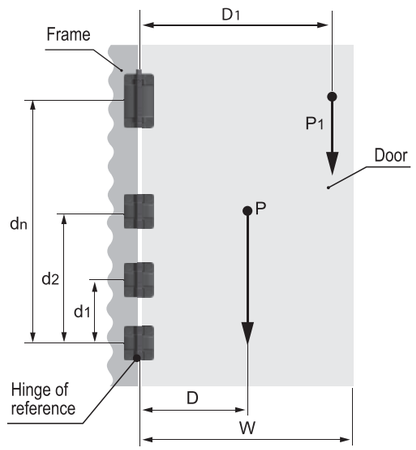

The technical designer must use suitable safety factors (k) according to the type of application and function of the CFSW. hinge.

Example hinge CFSW.110-6-2NO+2NC-C-A

P = 294 N (30 Kg) D = 0,4 m N = 3
d_T = 1,5 m d_2 = 1 m d_1 = 0,5 m
P_1 = 196 N (20 Kg) D_1 = 1,2 m

$$\frac{490}{3} = 163 \cdot k < 2100$$

$$\frac{[(294 \cdot 0,4)+(196 \cdot 1,2)]}{1,5} = 235,2 \cdot k < 2800$$

$$\frac{[(294 \cdot 0,4)+(196 \cdot 1,2)]}{1,5} = 235,2 \cdot k < 1300$$

The examples shown here must be considered only as explanatory, since they are not applicable to all the different applications, conditions of use, ways of assembly which can actually take place. In practice, the technical designer, after applying a suitable safety factor (k) must also test the chosen product to check its suitability.
For further general technical information, refer to the guidelines.

CFSW. and CFMW. assembly kit for profiles

SUPER-technopolymer

PLATE
Glass-fibre reinforced polyamide (PA) SUPER-technopolymer, black colour, matte finish.

SCREWS AND NUTS
AISI 304 stainless steel.

FEATURES AND APPLICATIONS
PMW assembly plate allows the mounting of CFSW.110 and CFMW.110 hinges on standard profiles of 30, 35, 40, 45 and 50 mm with T-slot.
The mounting on profiles of 40 mm can also be performed without the use of assembly plate.
The fixing screws of the plate to the profile are not accessible after the assembly of the hinges (Fig. 1). Therefore, even with the use of PMW assembly plate, CFSW. and CFMW. hinges remain tamperproof.
The supply of the plate includes:
- 2 countersunk screws M6x12 (for CFSW.110).
- 2 countersunk screws M6x14 (for CFMW.110).
- 2 M6 hexagonal nuts, assembled into the plate, necessary for the fixing of the hinge to the plate.

Plates of different dimensions can be combined in case of door and doorframe made with profiles of different dimensions (Fig.2).

ASSEMBLY INSTRUCTIONS
- Fix the plate on the profile in the desired position by using M6 countersunk head screws (not included in the supply) and the relative dowels for T-slot type GN 505 (see page 979) (not included in supply).
- Fit CFSW.110 or CFMW.110 hinge (fig. 1) on the relative plate by using M6 countersunk head screws (included in the supply).
- Place the closing caps properly (included in the supply of the hinge).

TECHNICAL DATA
The use of PMW plate, properly assembled as indicated in the assembly instructions, guarantees the max limit static load of CFSW. and CFMW.

ELESA Original design

Fig.1

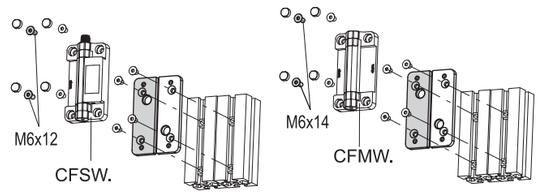

Fig.2

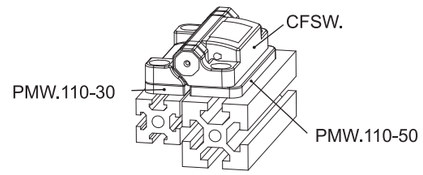

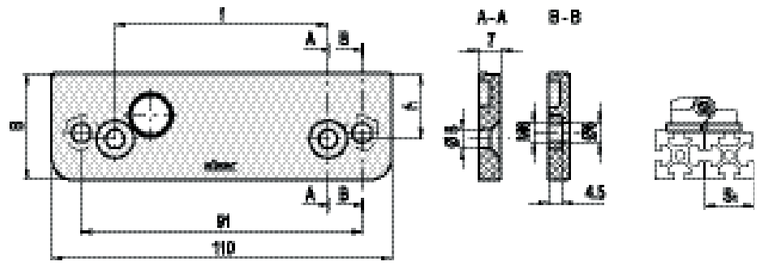

Code	Description	s1	B	f	f1	⚖
51901	PMW.110-30	30	28	73	14.5	26
51903	PMW.110-35	35	28	72	16.5	27
51904	PMW.110-40	40	28	70.5	19	29
51905	PMW.110-45	45	34	69	21	31
51907	PMW.110-50	50	34	69	24	28

Hinges

SUPER-technopolymer

MATERIAL
Glass-fibre reinforced polyamide (PA) SUPER-technopolymer, black or grey colour RAL 7040 (C33), matte finish.

ROTATING PIN
Glass-fibre reinforced polyamide based (PA) technopolymer, black or grey colour RAL 7040 (C33).

ASSEMBLY KIT (SEE ASSEMBLY):
- n°4 technopolymer covers (fig.1).
- n°4 technopolymer bushings (fig.2 and fig.3).

MOUNTING
CFMW. hinge can be assembled in three different modes:
- With M6 UNI 5933 ISO 10642 countersunk-head screw (not supplied) and screw cover supplied in the kit (fig. 1) to avoid free access to screws.
- With cylindrical-head screw with hexagon socket M6 UNI 5931 ISO 4762 (not supplied) to set with the bushing supplied in the kit (fig.2).
- With M6 UNI 5588 ISO 4032 nut (not supplied) and the bushing supplied in the kit (fig.3). This kind of assembly makes the hinge totally tamper-proof preventing any tampering.

FEATURES AND APPLICATIONS
The different assembly options make this product easy to install on the most common aluminium profiles (30 mm minimum side).
CFMW. hinge can be assembled with CFSW. hinge with built-in safety switch. CFSW. (see page 1428).

ROTATION ANGLE (APPROXIMATE VALUE)
Max 180° (0° and +180° being 0° the condition where the two interconnected surfaces are on the same plane).
Do not exceed the rotation angle limit so as not to prejudice the hinge mechanical performance.
The condition where the two interconnected surfaces are on the same plane is to be strictly verified because the hinge must not be stressed by any negative angle (fig.4).
To choose the convenient type and the right number of hinges for your application, see the Guidelines (on page 1368).

ELESA Original design

Fig.1

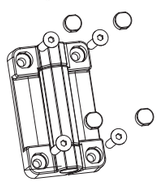

Fig.2

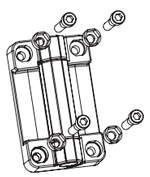

Fig.3

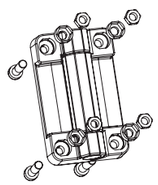

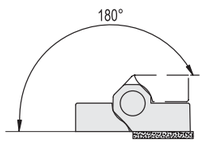

Fig.4

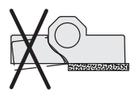

Resistance tests	AXIAL STRESS	RADIAL STRESS	90° ANGLED STRESS
	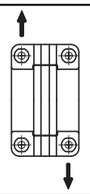	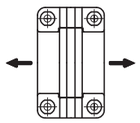	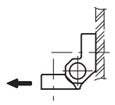
Description	Max. limit stati load Sa [N]	Max. limit stati load Sr [N]	Max. limit stati load S90 [N]
CFMW.70	4500	7600	5800
CFMW.110	2100	2800	1300

The max static load is the value above which the material may break thus prejudicing the hinge functionality use. Obviously, a suitable factor, according to the importance and the safety level of the specific application must be applied to this value.

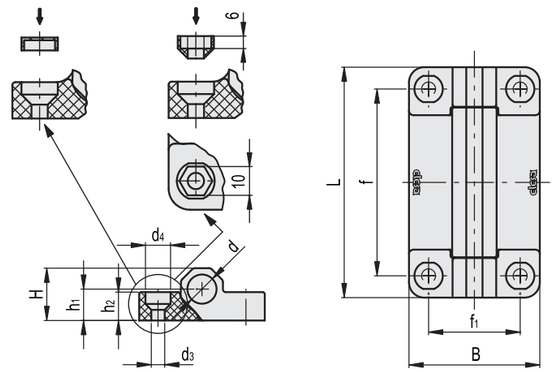

Code	Description	Code	Description	L	B	f±0.25	f1 ±0.25	H	h1	h2	d	d3	d4	C# [Nm]	⚖
425951	CFMW.70-SH-6	425951-C33	CFMW.70-SH-6-C33	70	60	50	42	25	15	15	13.5	6.5	12	5	80
425956	CFMW.110-SH-6	425956-C33	CFMW.110-SH-6-C33	110	60	91	42	25	15	15	12	6.5	12	5	125

Suggested tightening torque for assembly screws.

www.METALIKA-KACIN.com

Hinges
with built-in safety switch
SUPER-technopolymer

MATERIAL
Self-extinguish high-rigidity SUPER-technopolymer, black colour, matte finish.
Thanks to its housing made out of SUPER-technopolymer, the CFSQ hinge guarantees the double insulation of the internal circuits, therefore there is no need of grounding connection. Furthermore, the housing protects the electric contacts from shocks, atmospheric agents and accidental penetration of tools.

ROTATING PIN
AISI 303 stainless steel.

STANDARD EXECUTIONS
Assembly by means of pass-through holes for M6 countersunk-head screws UNI 5933, DIN 7991.
Starting work angle 0°:
- **C-A-D**: axial connector, microswitch on the right.
- **C-A-S**: axial connector, microswitch on the left.
- **C-B-D**: rear connector, microswitch on the right.
- **C-B-S**: rear connector, microswitch on the left.
- **F-A-D**: axial cable, 2 or 5 m length, microswitch on the right.
- **F-A-S**: axial cable, 2 or 5 m length, microswitch on the left.
- **F-B-D**: rear cable, 2 or 5 m length, microswitch on the right.
- **F-B-S**: rear cable, 2 or 5 m length, microswitch on the left.

Starting work angle -90°:
- **C-A-D-EA**: axial connector, microswitch on the right.
- **C-A-S-EA**: axial connector, microswitch on the left.
- **C-B-D-EA**: rear connector, microswitch on the right.
- **C-B-S-EA**: rear connector, microswitch on the left.

Cable type: UL/CSA STYLE 2587 3 X AWG 22.

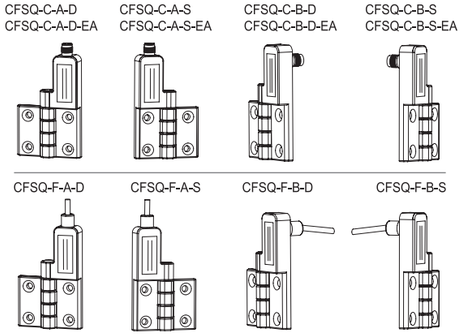

ROTATION ANGLE (APPROXIMATE VALUE)
CFSQ: max 190° (-10° and +180° see Fig.1).
CFSQ-EA: max 270° (-90° and +180° see Fig.1).
0° is the condition where the interconnected surfaces are on the same plane.
See Built-in safety switch functioning and maintenance.
The hinge must not be stressed by any negative angle of less than -10° (CFSQ) and -90° (CFSQ-EA).

Fig.1

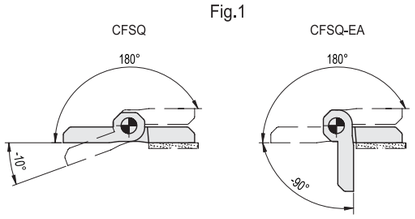

ELESA Original design

FEATURES AND APPLICATIONS
- The hinge with built-in switch is a safety device because in case of accidental opening of doors, machine protections, or safety doors on machines and production equipment, it automatically breaks off the power supply hence protecting the operators.
- This hinge can be subject to frequent cleaning cycles and can be used in any situation or environment where a special attention to cleaning and hygiene is requested, thanks to the IP67 protection class and the use of stainless steel elements for closing the hinge body.
- Switch equipped with two contacts: one NC contact and one change-over NO contact, form C, see IEC EN 60947-5-1 standard.
- Switch set with positive opening (in compliance with IEC EN 60947-5-1 standard, K attachment): the contacts break off for the direct movement of an actuator, onto which the working force is applied through non elastic elements.
- Quick release switch: the stroke speed of the contact-holder slider does not depend on the working speed.
- Easy to assemble: the built-in safety switch is integrated into a single body with the hinge, thus offering a very easy and fast assembly. This is a great advantage in comparison with some traditional systems which still require to set up separately a hinge and a safety switch connected by a special pin to replace the standard pin of the hinge.
- Universal usage: CFSQ hinges can be assembled on the most common aluminium profiles.

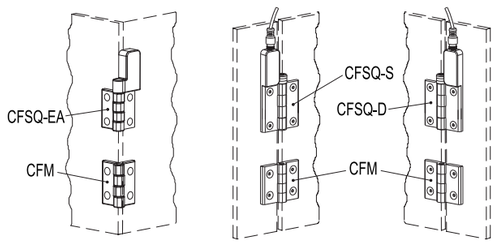

ACCESSORIES ON REQUEST
- FC.M12x1: extensions with 4 pole M12 female axial connector.

SPECIAL EXECUTIONS ON REQUEST
Operating angle of the hinge other than from 0° to 180°, every 15°, where the system frame/door requires a special execution.

ASSEMBLY INSTRUCTIONS
- Fit the hinge body with the built-in switch on the fixed part (frame) and the other body on the door. The distance between the axis of the hinge pin and the door must be at least 5 mm (fig.3).
- Leave the least clearance between the holes in the mounting walls and the diameter of the setscrews (Max 0.5 mm). The suggested tightening torque should not be exceeded: 5 Nm.
- The hinge must not be used as a mechanical end-stroke either for door maximum opening or for closed door. For this purpose we recommend using external mechanical stops to prevent the door from opening completely against the hinge body assembled on the frame or exceeding the angle where the two interconnected surfaces are on the same plane.
- The CFSQ hinge must always be assembled with at least a second complementary hinge CFM. (CFM.60-45- SH-6 code 425812). In case of horizontal door opening or in general of a limited weight it is possible to use one hinge only.
- The connection cables must always be protected against mechanical damages.

CABLES
- Cable with M12x1 connector using the following circuit scheme.
- Normally Closed contact NC: for safety applications, according to IEC EN 60947-5-1 standard, only the NC contact (for break off) must be used leaving the NO contact unused.
- Normally Open contact NO: the normally open contact can be used only if the hinge is used as status indicator (signalling) in this case also the NC contact can be used simultaneously always as status indicator (signalling).

BUILT-IN SAFETY SWITCH FUNCTIONING AND MAINTENANCE
- The angle nominal variation required for switching the microswitch is of 6° (see stroke diagram). In normal conditions of use, when the mechanical life of the device is completed, the nominal variation may increase up to 9 °. We suggest to check the proper functioning of the hinge according to UNI EN ISO 13857.
- For applications with safety protection function, the hinge must be able to turn at least by 15°, equivalent to the forced opening (positive opening) of the contacts by the actuator.
- We suggest to check the proper functioning of the CFSQ hinge prior to the start up and afterwards periodically.
- When the protection is opened the machine must immediately stop. When the protection is opened at any degrees, the machine must not be able to start.

WARNINGS
- The hinge with built-in safety switch must not be used in environments with frequent temperature changes which can cause condensation, in the presence of explosive or flammable gasses.
- The hinge with built-in safety switch must always be protected with a proper fuse (see table).
- The choice and use of the hinge with built-in safety switch is the responsibility of the customer who will check that the relevant application is compliant to the safety standards in force under the actual operating conditions.
- Using CFSQ hinges always implies a full knowledge of and compliance with the safety standards in force, including EN ISO 13849-1, IEC EN 60204-1, UNI EN ISO 14119, EN ISO 12100.
- The hinge must always be assembled and connected by qualified operators who have to check regularly the hinge perfect functioning.

Fig.3

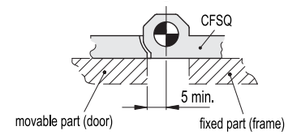

Drilling template

CFSQ-C-A
CFSQ-C-A-EA
CFSQ-F-A

CFSQ-C-B
CFSQ-C-B-EA
CFSQ-F-B

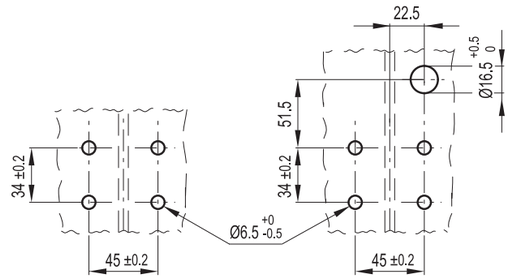

Cable/connector wiring

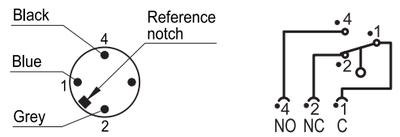

Stroke diagram

CFSQ

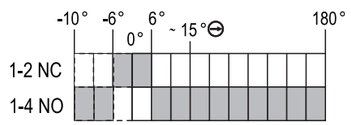

CFSQ-EA

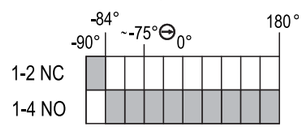

Positive opening

in compliance with EN 60947-5-1

Double insulation

In compliance with:
IEC EN 60947-5-1:2003+A1:2009
Low voltage control auxiliaries
Approved by UL: E360222

Extension cable wiring
(see accessory on request)

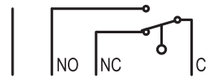

3/4

Category of usage		CFSQ-C.. (connector)	CFSQ-F.. (cable)
AC15 standard IEC 60947-5-1 Typical applications: electromagnetic load controls in alternating current	48 V	4 A	4 A
	220 V	4 A	4 A
	440 V	-	3 A
DC13 standard IEC 60947-5-2 Typical applications: electromagnet controls in direct current	24 V	4 A	4 A
	127 V	0.3 A	0.3 A

Description	Electrical features	Environmental rating
CFSQ.60-SH-6-C	4A at 24 Vac/dc (resistive load)	Types 1 and 4X "indoor use only"
CFSQ.60-SH-6-F	B3000 pilot duty 4A at 240 Vac (resistive load) 4A at 240 Vdc (resistive load)	
Environmental conditions for assembly: maximum permissible ambient temperature 40°C		

Mechanical features	Electrical features	
Type of contact: Ag 90 Ni 10	Thermic power Ith	Cable 10 A
		Connector: 4 A
Maximum working frequence: 600 cycles/hour *	Short-circuit protection: 6A gl	
Mechanical life-span (test carried in compliance with IEC EN 60947-5-1): 10^6	Seal voltage at nominal pulse 4 KV	
	Insulation nominal voltage Ui = 250V	
Protection class of the housing EN60529: IP67	Minimum force (torque for positive opening of contact): 0.5 Nm	
Speed of operation: minimum 2° / sec., maximum 90° / sec.	Short circuit conditioned current: 1000 A	
	Pollution degree: 3	
	B10d = 2000000	
	Tm = 20 years	

* A cycle of operations is equivalent to one closure and one opening as required by the standard EN60947-5-1.

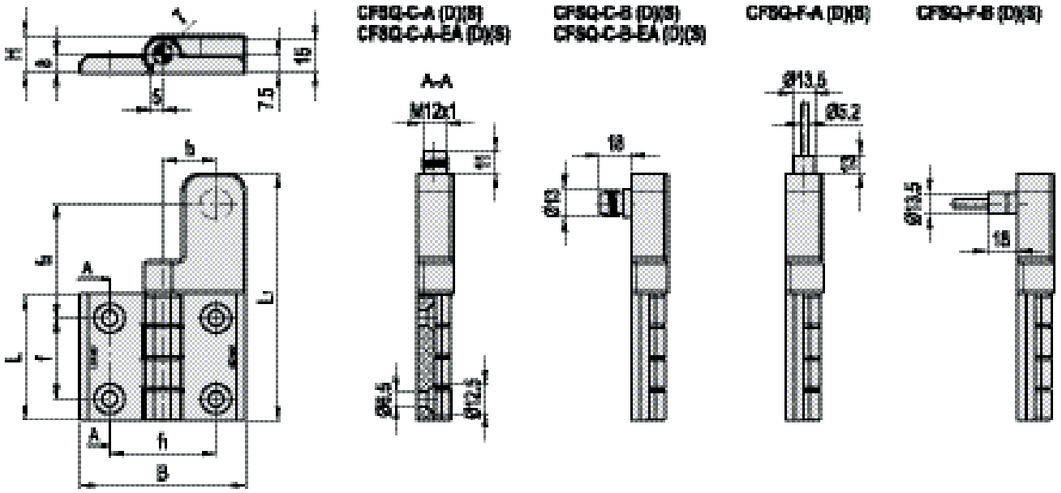

Code	Description	Code	Description	L	B	L1	f	f1	f2	f3	H	C# [Nm]	⚖
427011	CFSQ.60-SH-6-C-A-D	427011-EA	CFSQ.60-SH-6-C-A-D-EA	53	70	110	34	45	-	-	16	5	96
427013	CFSQ.60-SH-6-C-A-S	427013-EA	CFSQ.60-SH-6-C-A-S-EA	53	70	110	34	45	-	-	16	5	96
427015	CFSQ.60-SH-6-C-B-D	427015-EA	CFSQ.60-SH-6-C-B-D-EA	53	70	110	34	45	51.5	22.5	16	5	96
427017	CFSQ.60-SH-6-C-B-S	427017-EA	CFSQ.60-SH-6-C-B-S-EA	53	70	110	34	45	51.5	22.5	16	5	96

Code	Description	L	B	L1	f	f1	f2	f3	H	C# [Nm]	⚖
427021	CFSQ.60-SH-6-F-A-D-2	53	70	110	34	45	-	-	16	5	196
427023	CFSQ.60-SH-6-F-A-S-2	53	70	110	34	45	-	-	16	5	196
427025	CFSQ.60-SH-6-F-B-D-2	53	70	110	34	45	51.5	22.5	16	5	196
427027	CFSQ.60-SH-6-F-B-S-2	53	70	110	34	45	51.5	22.5	16	5	196
427031	CFSQ.60-SH-6-F-A-D-5	53	70	110	34	45	-	-	16	5	330
427033	CFSQ.60-SH-6-F-A-S-5	53	70	110	34	45	-	-	16	5	330
427035	CFSQ.60-SH-6-F-B-D-5	53	70	110	34	45	51.5	22.5	16	5	330
427037	CFSQ.60-SH-6-F-B-S-5	53	70	110	34	45	51.5	22.5	16	5	330

Suggested tightening torque for assembly screws.

4/4

Resistance tests	AXIAL STRESS	RADIAL STRESS	90° ANGLED STRESS
	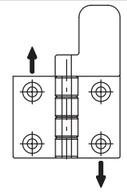	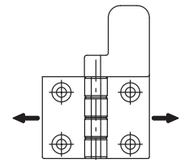	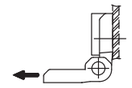
Description	Max. limit stati load Sa [N]	Max. limit stati load Sr [N]	Max. limit stati load S90 [N]
CFSQ	2100	2800	1300
CFSQ-EA	1200	1500	600

For CFSQ. hinges with built-in safety switch, the reference value supplied is the max limit static load (Sa, Sr, S90), since these hinges can be used as safety devices. Above this value, the material may break, thus prejudicing the hinge functionality.Obviously a suitable factor, according to the importance and safety level of the specific application, must be applied to this value.The load values shown in the tables of the different hinges are the result of tests carried out in our laboratories under controlled temperature and humidity (23°C-50% R.H.), under given conditions of use and for a limited period of time.

Example of suitability check

P = weight of the door [N]
P_1 = additional extra load [N]
W = width of the door
D = distance [metres] between the centre of gravity of the door and the hinge axis. In normal conditions D = W/2
D_1 = distance [metres] between the hinge axis and the additional extra load application point
N = number of hinges
k = safety factor
$d_1 ... d_n$ = distances (metres) of all the hinges from the hinge of reference
$d_T = d_1 + d_2 + ... + d_n$ in case of only two hinges assembled, d_T is simply the distance between them

Conditions to be checked in order to ensure a correct functioning with two or more hinges.

$$\frac{(P+P1)}{N} \cdot k < Sa$$

$$\frac{[(P \cdot D)+(P1 \cdot D1)]}{d_T} \cdot k < Sr$$

$$\frac{[(P \cdot D)+(P1 \cdot D1)]}{d_T} \cdot k < S90$$

Hinged door on a vertical axis

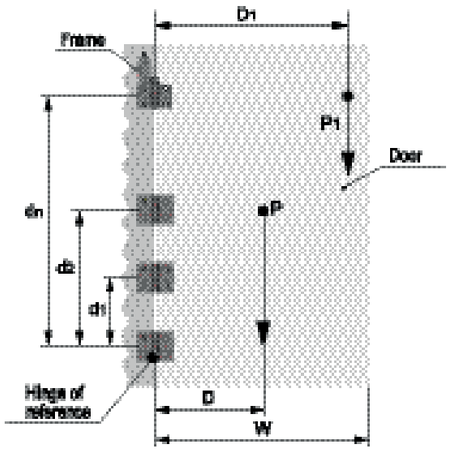

The technical designer must use suitable safety factors (k) according to the type of application and function of the CFSQ. hinge.

Example hinge CFSQ.60-SH-6

P = 294 N (30 Kg) D = 0,4 m N = 3
d_T = 1,5 m d_2 = 1 m d_1 = 0,5 m
P_1 = 196 N (20 Kg) D_1 = 1,2 m

$$\frac{490}{3} = 163 \cdot k < 2100$$

$$\frac{[(294 \cdot 0,4)+(196 \cdot 1,2)]}{1,5} = 235,2 \cdot k < 2800$$

$$\frac{[(294 \cdot 0,4)+(196 \cdot 1,2)]}{1,5} = 235,2 \cdot k < 1300$$

The examples shown here must be considered only as explanatory, since they are not applicable to all the different applications, conditions of use, ways of assembly which can actually take place. In practice, the technical designer, after applying a suitable safety factor (k) must also test the chosen product to check its suitability.
For further general technical information, refer to the guidelines.

www.METALIKA-KACIN.com

Cables with connector coupling M12x1

RoHS

SPECIFICATION

Types

- Type **G**: Connector coupling straight
- Type **W**: Connector coupling 90° angled

Handle (Housing)
Plastic
Polyurethan-Elastomer TPU

Cable (Outer sheath)
Polyurethan PUR
black

Temperature resistance: -40 °C ... +90 °C

Insulating resistance: > 10^9 Ω

Degree of pollution: 3 / 2
according to EN 60664-1

Protection class: IP67
(in screwed condition)
according to EN 60529

Connecting nut M12x1
Brass, nickel plated

INFORMATION

Cables with connector coupling M12x1 GN 330 are used in conjunction with standard elements which have an electric switching function.

ON REQUEST

- other cable lengths l

Type **G**

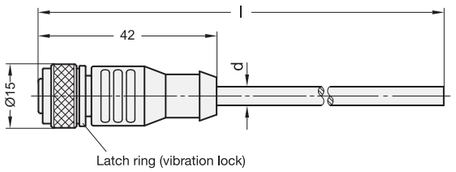

Type **W**

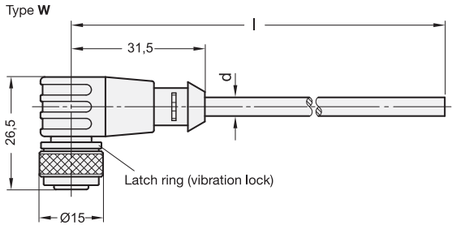

GN 330

Description	Connector	Number of contacts	l	⚖
GN 330-M12x1-4-G-5	M 12 x 1	4	5	160
GN 330-M12x1-5-G-5	M 12 x 1	5	5	210
GN 330-M12x1-8-G-5	M 12 x 1	8	5	230
GN 330-M12x1-12-G-5	M 12 x 1	12	5	250
GN 330-M12x1-4-G-10	M 12 x 1	4	10	399
GN 330-M12x1-8-G-10	M 12 x 1	8	10	512
GN 330-M12x1-12-G-10	M 12 x 1	12	10	468
GN 330-M12x1-8-W-5	M 12 x 1	8	5	265
GN 330-M12x1-12-W-5	M 12 x 1	12	5	246
GN 330-M12x1-8-W-10	M 12 x 1	8	10	400
GN 330-M12x1-12-W-10	M 12 x 1	12	10	460

www.METALIKA-KACIN.com

Polymer hinges www.metalika-kacin.com

Cable with plug-in connector	d Outside diameter	Cross-section	Operating voltage acc. to IEC 60 664-1	Current load rating acc. to IEC 60512-3	Contact assignment
4-pole (4-wire)	5	4 x 0.34 mm²	max. 250 V	4 A	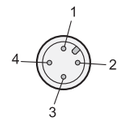 1 - brown 2 - white 3 - blue 4 - black
5-pole (5-wire)	5	5 x 0.34 mm²	max. 60 V	4 A	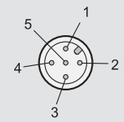 1 - brown 2 - white 3 - blue 4 - black 5 - grey
8-pole (8-wire)	6	8 x 0.25 mm²	max. 30 V	2 A	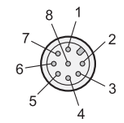 1 - white 2 - brown 3 - green 4 - yellow 5 - grey 6 - pink 7 - blue 8 - red
12-pole (12-wire)	6	12 x 0.14 mm²	max. 30 V	1.5 A	1 - brown 2 - blue 3 - white 4 - green 5 - pink 6 - yellow 7 - black 8 - grey 9 - red 10 - purple 11 - grey / pink 12 - red / blue

OTHER CABLE PROPERTIES

This adaptable cable, suitable for drag chains, features and outer jacket made of PUR and a core insulation made of polypropylene. It is free of PVC, silicon and halogens. UL and CSA approvals are available.

The cable is also resistant to oil, chemical, hydrolysis, microbes and welding sparks and flame retardant under IEC 60332-2-2 which makes the cable the perfect choice in many applications.

www.METALIKA-KACIN.com

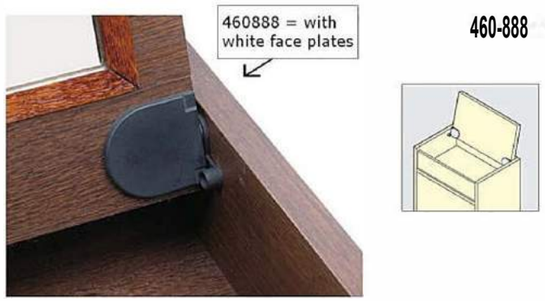

460-888

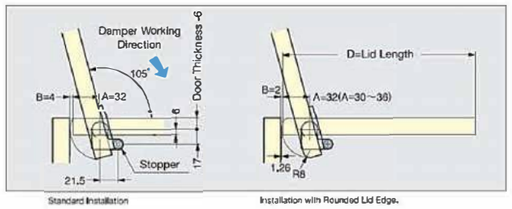

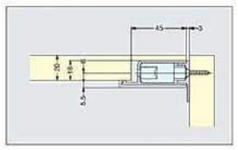

hinges for top opening flap doors with soft-closing
black plastic with stainless steel UDH-16 damper
hinge-A: with built-in white plastic shaft
dampening direction: counter clockwise
hinge-B: with built-in grey plastic shaft
dampening direction: clockwise
with torque 34-50 Kg/cm (friction not adjustable)
the hinge can be used for 0°C. till +40°C.
soft-closing, stop on 105°
from 105°-80° only working if enough gravity
for built-in, thickness mechanism 16mm
with white plastic face plates 50x53mm
with black mounting plate LH for white damper-A
with black mounting plate RH for grey damper-B
sold in pairs

also possible, delivery on request:
- like 460888, but fully black (460889, see photo)

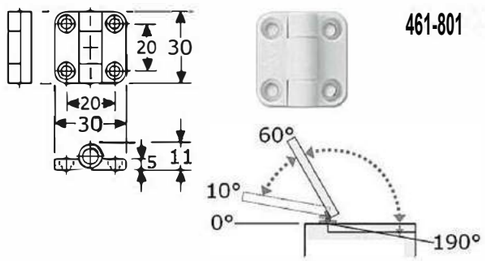

461-801

detent hinges 30x30x5mm
white polyamid (PA)
without spring, holds door in 3 different positions:
with blocking on +10°, +60° and +190°
with extra power on +180° to push to +190°
3-knuckles ø9,5mm, fixed pin, total highness 11mm
with 4 lower screwholes ø4,2mm
in boxes of 20 Pcs. (delivery on request)

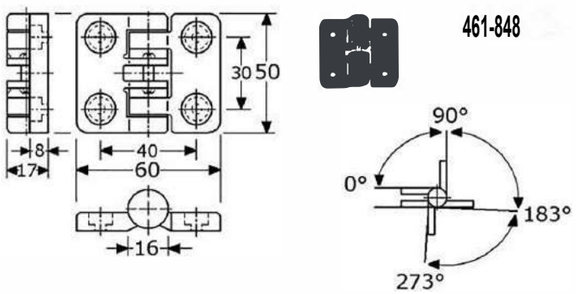

461-848

detent hinges 50x60x8mm
black polyamid (PA)
without spring, holds door in 4 different positions:
with blocking on 0°, +90°, +183° and +273°
with fixed stainless steel pin ø4,5mm
4-knuckles ø16mm, total highness 17mm
with 4 lower screwholes ø4,2mm
with 4 black plastic covers ø13mm ● ● ● ●
in boxes of 20 Pcs.

CONCEALED HINGE **404**

RoHS

- Suitable for lightweight panels and applications
- Left and right hand application is possible
- Suitable for M6 screws
- 90° hinge rotation angle

MATERIAL
FRAME PART: PA6 GFR30
DOOR PART: PA6 GFR30
NUT: Steel

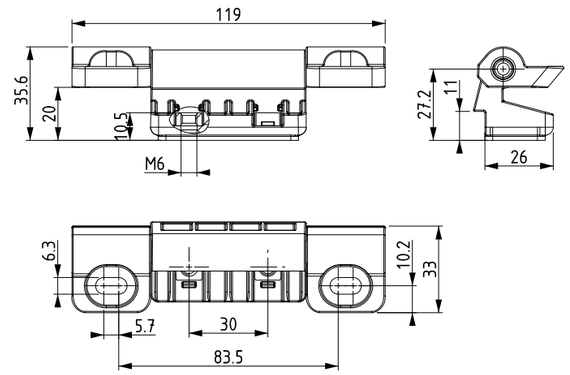

Hinge Rotation Angle

Note: Bolts are not supplied

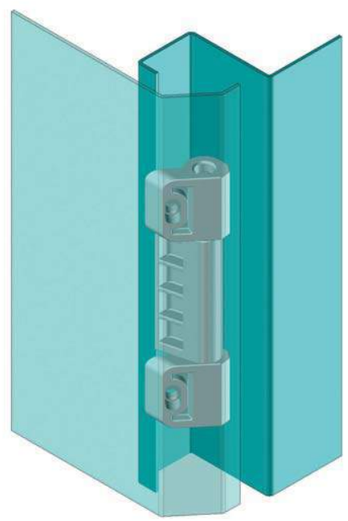

www.METALIKA-KACIN.com
www.METALIKA-KACIN.com

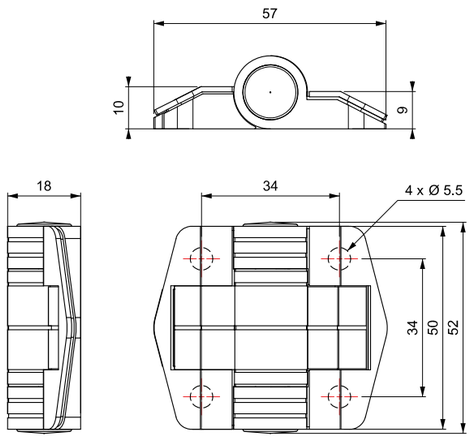

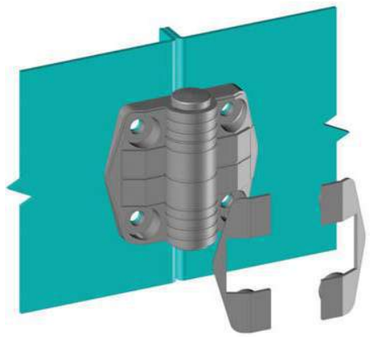

Position	Force (N-m)	Version
	No Detens	10
80°	0.7	21
	1.1	22
	1.7	23
115°	0.7	31
	1.1	32
	1.7	33
150°	0.7	41
	1.1	42
	1.7	43

PRODUCT CODE

2609 - 2 - 0 - V

GROUP CODE MATERIAL FINISH VERSION

MATERIAL	M
Plastic	2

FINISH	F
No finish	0

2609 INDEX HINGE

- Different angle and torque is available
- Holds door open at specific degrees. 80°, 115°, 150°

MATERIAL
BODY: Polyamide DIN-EN ISO 1043-1 PA6 GFR 30
PIN: Plastic

Polymer hinges www.metalika-kacin.com

HVAC HINGE 310

MATERIAL
BODY: Polyamide DIN-EN ISO 1043-1 PA 6 GFR 30
PIN: Stainless Steel

Hinge Rotation Angle
0 180°

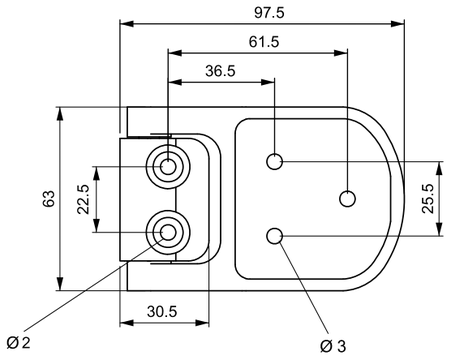

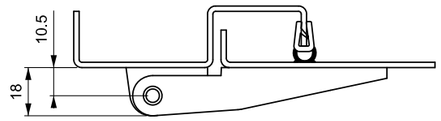

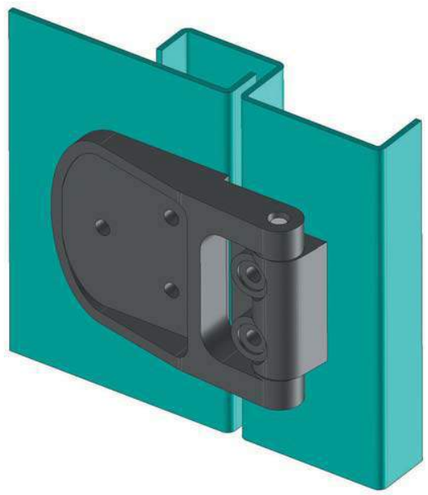

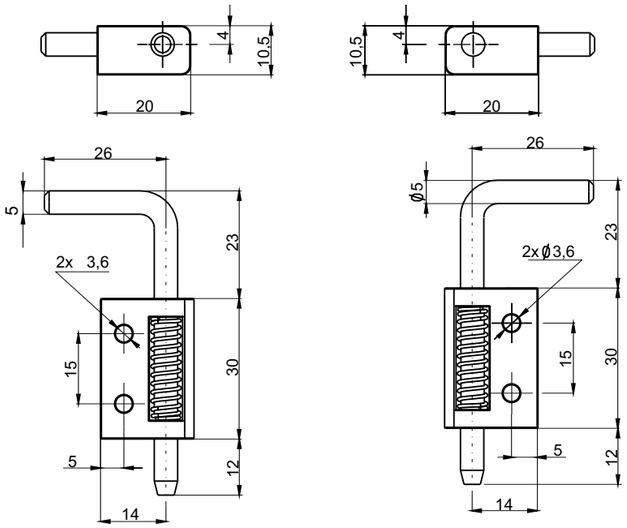

3ST94.001 3ST94.002

CATALOGUE NUMBER	COMPONENTS	MATERIAL	FNISH [C]
			RAL9005
3ST94.001 3ST94.002	Holder	Polyamide	07
	Pin	Steel zinc plated	

TA60

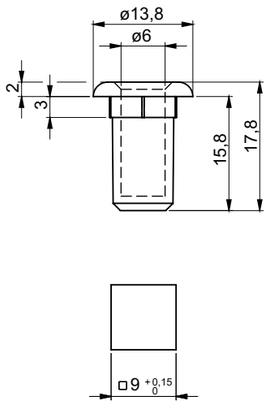

Mounting hole

3ST81.100
3ST81.101

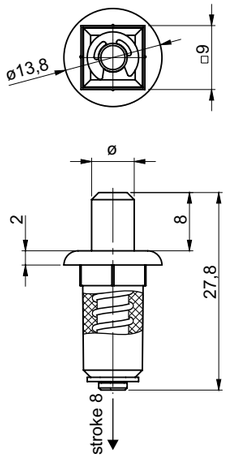

CATALOGUE NUMBER	ø [mm]	COMPONENTS	MATERIAL	FINISH [C]
				RAL9005
3ST81.100	6	Housing	Polyamide PA6	07
		Pin	Steel zinc plated	
3ST81.101	5	Spring	Spring steel zinc plated	
TA60	6	Bushing	Polyamide PA6	

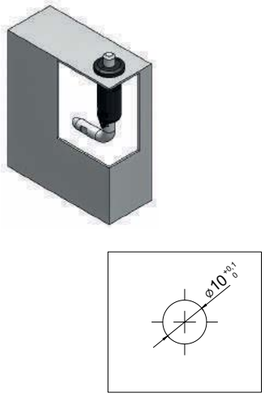

Mounting hole

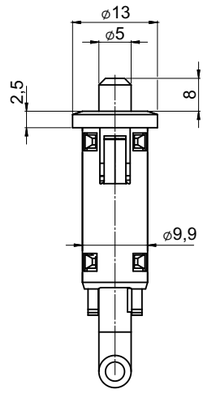

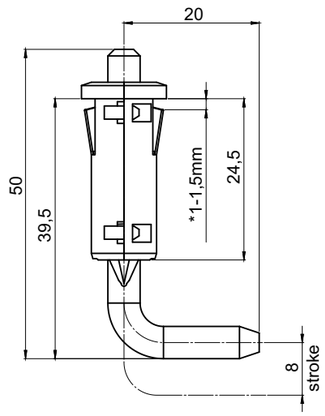

CATALOGUE NO.	COMPONENTS	MATERIAL	FINISH [C]	
			RAL 9005	RAL 9010
3ST81.001	Housing	Polyamide	07	11
	Pin	ZAMAK 5		
	Spring	Steel		

How to order: 3ST81.001 — C
Catalogue number
Finish

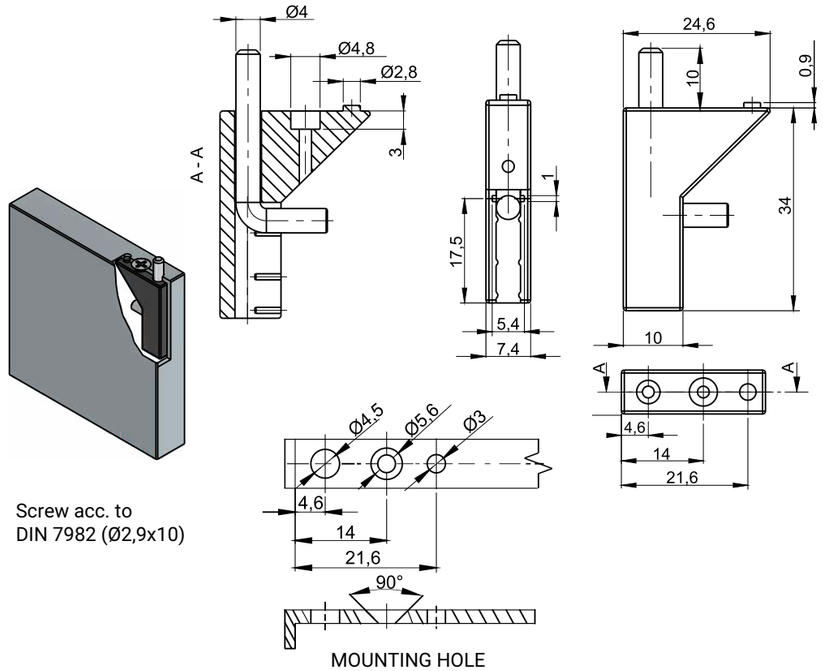

Screw acc. to
DIN 7982 (Ø2,9x10)

MOUNTING HOLE

CATALOGUE NUMBER	COMPONENTS	MATERIAL	FINISH [C]
			RAL 9005
3ST84.001	Holder	Polyamide	07
	Pin	Steel zinc plated	

www.METALIKA-KACIN.com

Expanding pin

* Attention:
The indicated dimension is the final dimension, please observe in case of surface coatings.

180° clip-in hinge to screw on or with expansion pins

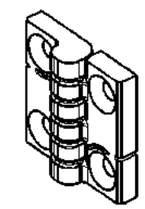

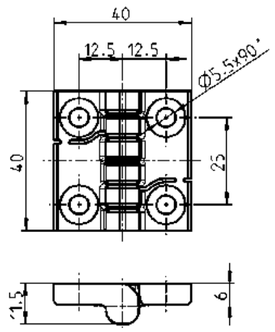

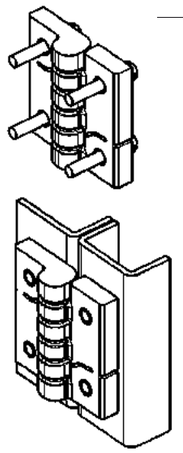

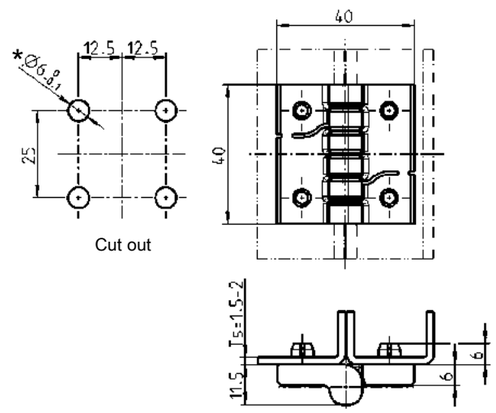

Clip-in hinge for countersunk screw M5 polyamide GF colour as requested, unassembled	
black	1056_E66
silver	1056_E66_HW
Clip-in hinge with expansion pins polyamide GF black, unassembled	
	on request

Mounting within seconds

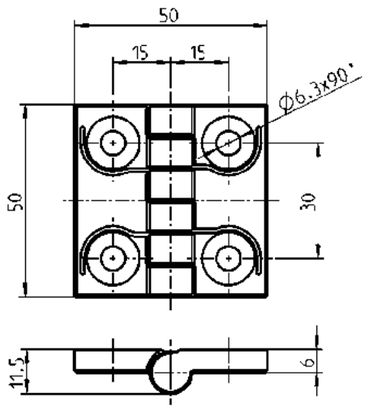

Clip-in hinge for countersunk screw M6 polyamide GF colour as requested, unassembled	
black	1056_E68
silver	on request

180° screw-on hinge

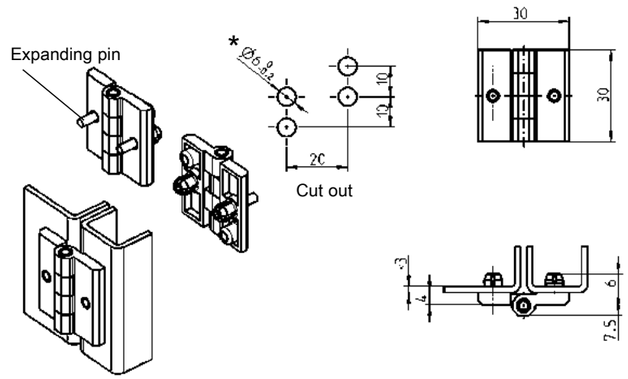

AISI INOX

Hinge, hinge pin and expanding pins polyamide black	
	1056_E32

* Attention:
The indicated dimension is the final dimension, please observe in case of surface coatings.

Scharnier

Mat.: Kunststoff, schwarz

Art.-Nr.: 12203

Kunststoff-Spritzguss-Scharnier
Aus glasfaserverstärktem Nylon komplett mit Gummidichtung
In erster Linie für Glasanwendungen.

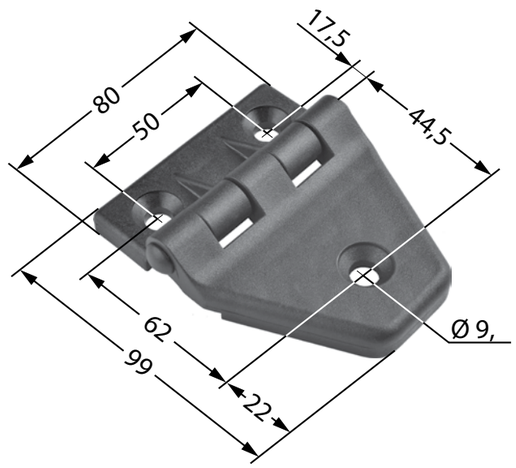

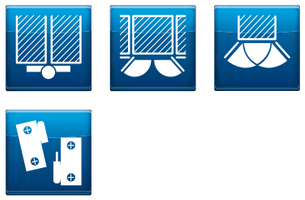

Assembling:
Hinge is fixed by driving in the polyamide pins. The stripping force in Z direction is 1500 N.

* not included

small head = DIN ISO 2009, 2010, 7046-1, 7046-2, 7047

180° hinge

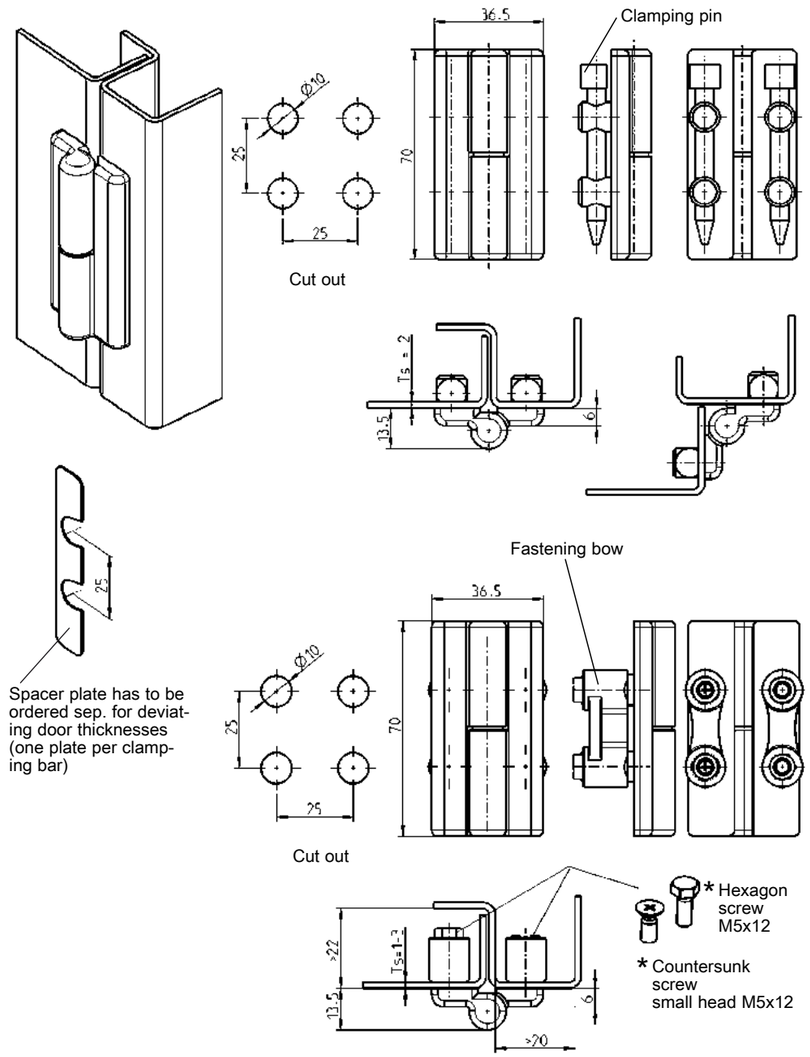

Hinge with clamping pin zinc die black powder coated or polyamide GF black; clamping pin Polyamide GF black, pin stainless steel			
		Zinc die	polyamide
Ts = 1.5	RH	–	1056_E49
Ts = 1.5	LH	–	1056_E50
Ts = 2.0	RH	1056_E35	–
Ts = 2.0	LH	1056_E33	–
Hinge with fastening bow zinc die black powder coated; pin stainless steel			
RH			1056_E44
LH			1056_E43
Support plate 304 (1x per pin fixing)			
Hinge for Ts	**change into Ts**		
1,5	1,0		1110-39-02
2,0	1,0		1110-39-03
2,0	1,5		1110-39-02

Functional Locking Hinge

1043-1 PA6 GFR 30
Handle: Polyamide DIN-EN ISO 1043-1 PA6 GFR 30
Driver: Zamak DIN-EN 1774-ZnAl4Cu1
Cam: Zamak DIN-EN 1774-ZnAl4Cu1
Catch Plate: Zamak DIN-EN 1774-ZnAl4Cu1

NEW

- Lock can also be used as hinge
- Door can be completely removed by unlocking the both products

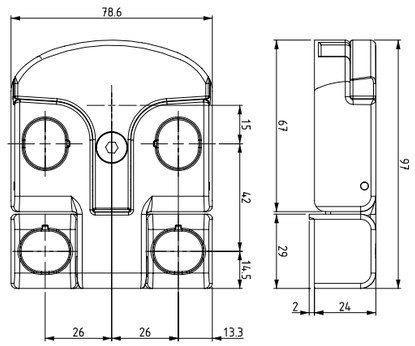

Part Number	Standard Pack Quantity
71220E	25

Compression Latch-Hinge Small with or without pressure relief

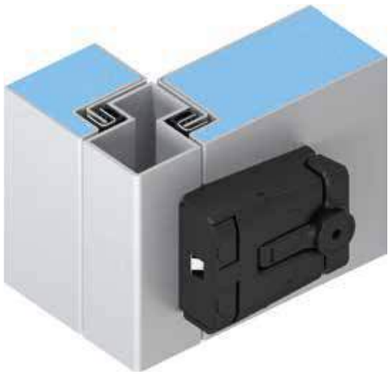

Compression latch-hinge locked

Latch hinge with pressure relief, handle unlocked

Latch hinge open

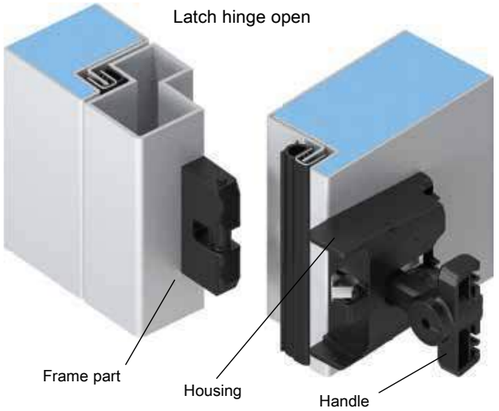

Hinge
180° opening angle

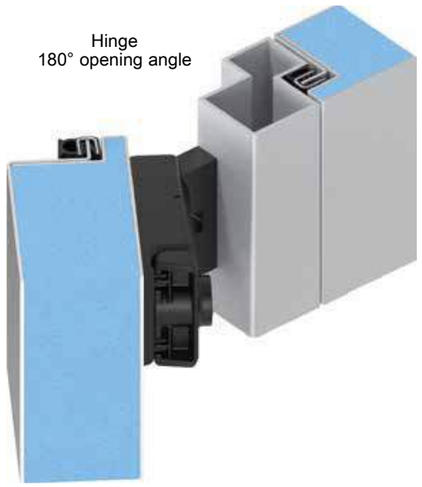

Product benefits

- Compression (5 mm) with low opening & closing force
- Door or flap can be removed by unlatching the handles on both sides
- 2D Adjustable (tolerance compensation)
- Right or left hinged
- Hinge 180° opening angle
- Available with or without safety feature “pressure relief”
- ATEX compliant explosion protection version available on request
- Patent submitted

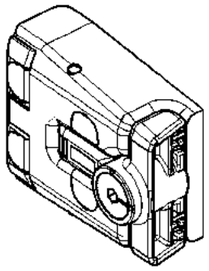

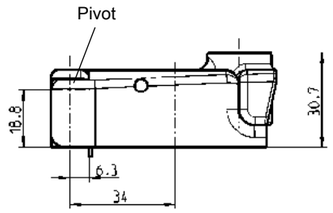

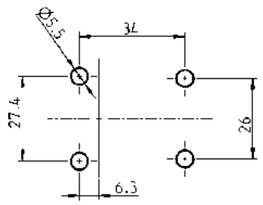

Frame part Housing
Cut out

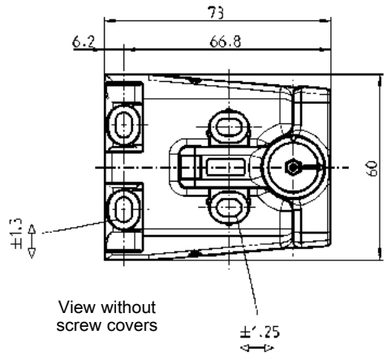

View without screw covers

HVACR Compression Latch-Hinge small: housing, handle, frame part polyamide GF black; screw covers polyamide black; latch zinc die nickel-plated and Top Coat; pin AISI 303; with spring			
① insert hexagon female BS 4 polyamide GF black			
② Round cylinder Series 9000 zinc die with stainless steel cap and dust cap. Each round cylinder has two silver steel nickel plated reversible keys at a ring.			
	① Insert	② Keyed 9081	② Keyed different
without pressure relief	1091_E169	on request	on request
with pressure relief	1091_E168	on request	on request

Further inserts on request

Compression Latch-Hinge Medium with or without pressure relief

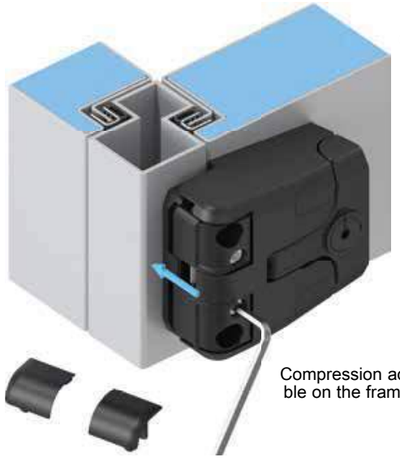

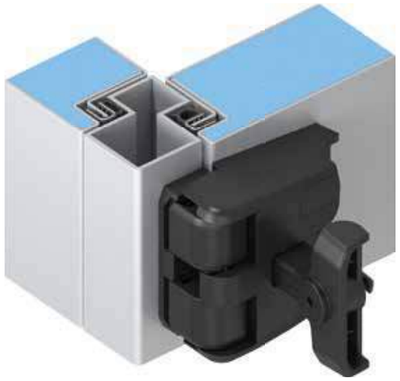

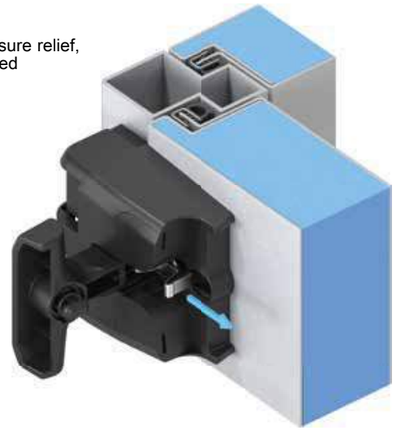

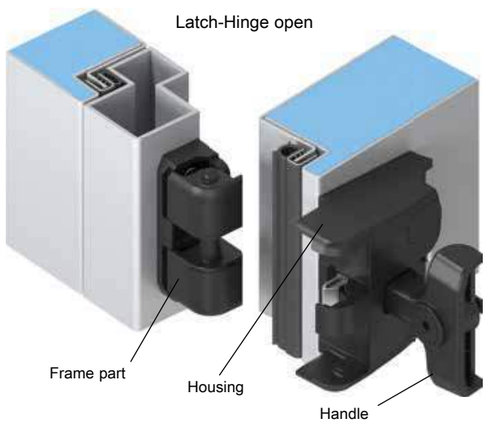

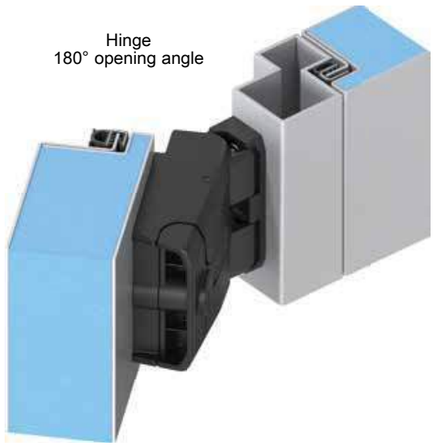

www.METALIKA-KACIN.com

Product benefits

- When the door is closed, the latch is adjustable (3 mm) to achieve perfect alignment
- Compression (5 mm) with low opening & closing force
- Door or panel can be removed by unlatching the handles on both sides
- 3D adjustable (tolerance compensation)
- Right or left hinged
- Hinge 180° opening angle
- Optional Compression Latch-Hinge available with safety feature “pressure relief”
- ATEX compliant explosion protection version available
- Patent submitted

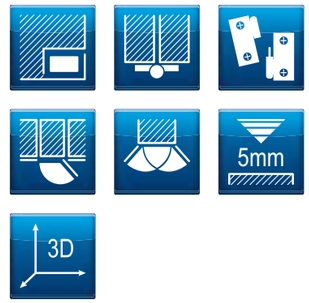

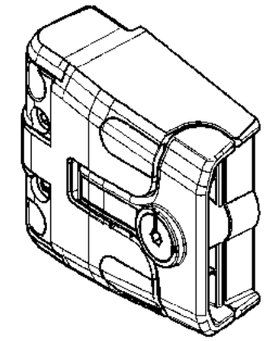

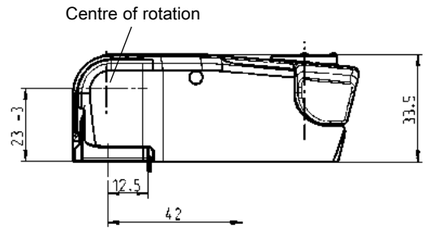

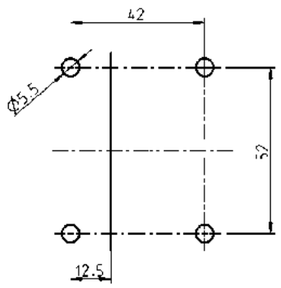

Frame part Housing

Cut out

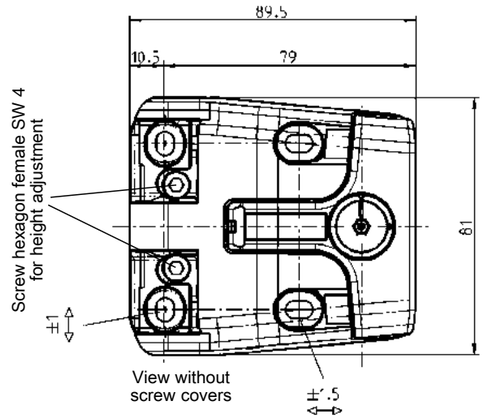

View without screw covers

Compression Latch-Hinge medium: housing, handle, screw covers polyamide GF black; top and bottom frame part zinc die black powder-coated; latch zinc die nickel-plated and Top Coat; pin AISI 303; screw for height adjustment, washer and nut m.s. zinc-plated; with spring			
① insert hexagon female BS 4 polyamide GF black			
② Round cylinder Series 9000 zinc die with stainless steel cap and dust cap. Each round cylinder has two silver steel nickel plated reversible keys at a ring.			
	① Insert	② Keyed 9081	② Keyed different
without pressure relief	1091_E146	on request	on request
with pressure relief	1091_E147	on request	on request

Further inserts on request

www.METALIKA-KACIN.com

HVACR Compression Latch-Hinge Large with emergency opening optional and with or without pressure relief

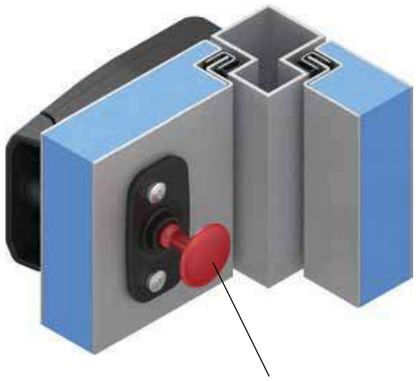

Compression Latch-Hinge locked

Compression adjustable on the frame part

By pressing the emergency opening, the locking hinge is opened safely even when the handle is locked

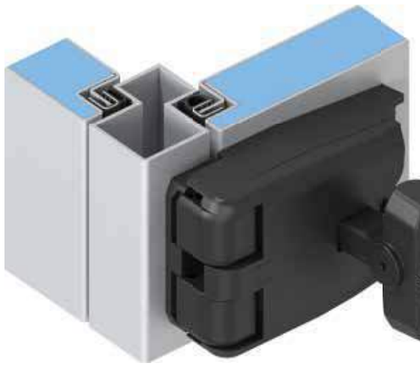

Latch-Hinge with pressure relief, handle unlocked

Latch-Hinge open

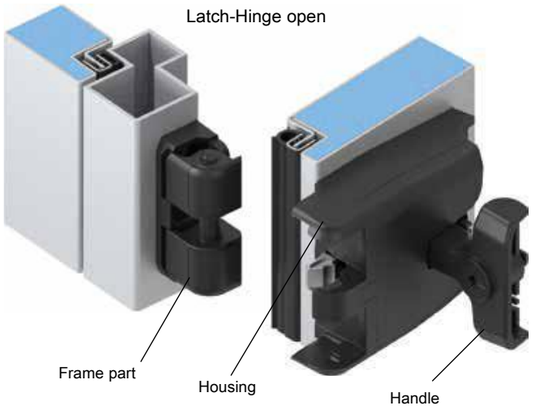

Hinge
180° opening angle

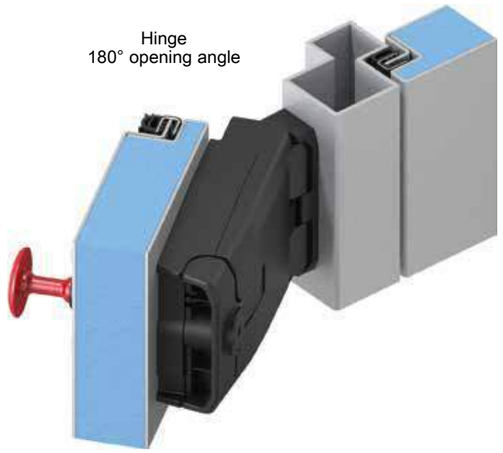

Product benefits

- When the door is closed, the latch is adjustable (3 mm) to achieve perfect alignment
- The favourable pivot point of the handle makes a seal compression of 5 mm possible using low actuation forces
- Door or panel can be removed by unlatching the handles on both sides
- 3D adjustable (tolerance compensation)
- Right or left hinged
- Hinge 180° opening angle
- Optional Compression Latch-Hinge available with safety feature “pressure relief”
- ATEX compliant explosion protection version available on request
- Patent submitted

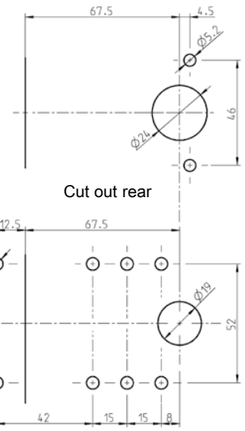

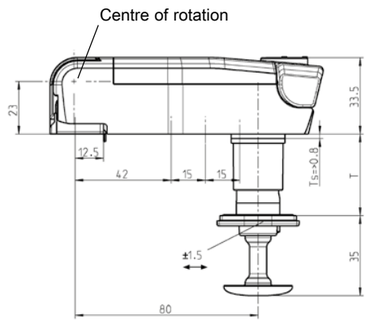

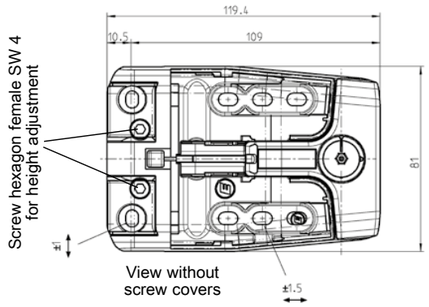

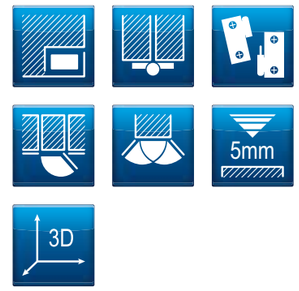

HVACR Compression Latch-Hinge large: housing, handle, screw covers polyamide GF black; top and bottom frame part zinc die black powder-coated; latch zinc die nickel-plated and Top Coat; pin AISI 303; screw for height adjustment, washer and nut m.s. zinc-plated; with springs and seal			
① insert hexagon female BS 4 polyamide GF black			
② Round cylinder Series 9000 zinc die with stainless steel cap and dust cap. Each round cylinder has two silver steel nickel plated reversible keys at a ring.			
	① Insert	② Keyed 9081	② Keyed different
without pressure relief	1091_E190	1091_E194	1091_E198
with pressure relief	1091_E191	1091_E195	1091_E199
Emergency opening Bezel, wrap polyamide GF black; trigger polyamide GF red; with foamed seal			
T = 30 +4.5 mm			1091_E175_30
T = 50 +4.5 mm			1091_E175_50
T = 60 +4.5 mm			1091_E175_60
T = 40, 70 - 100 mm			on request

Further inserts on request

www.METALIKA-KACIN.com

Locking technology for cold storage

Edge-mounted hinge | Series 4514 | FUTURO

- Stylish hinge for customised colour-schemes
- Universal use
- Adjustability in 3 dimensions
- Choice of rising and non-rising
- Left- and right-hinged doors
- Wide variety in surface finishes
- Coloured caps, removable
- Protection against unauthorized dismantling
- Spacers in 5 mm increments
- Door weight capacity of max. 80 kg using 2 hinges
- Material: Metal, zinc die-cast, plastic
- Caps of plastic

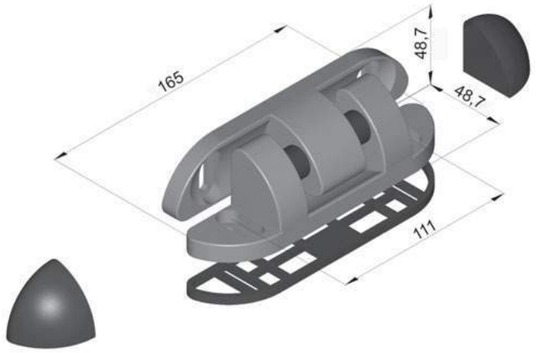

Adustability

Surface finishes:

Chromium-plated:

right hand, rising
Art.-Nr. 4514-020200

left hand, rising
Art.-Nr. 4514-020201

non-rising
Art.-Nr. 4514-020502

Grey (RAL 7001):

right hand, rising
Art.-Nr. 4514-020210

left hand, rising
Art.-Nr. 4514-020211

non-rising
Art.-Nr. 4514-020512

Option:

Spacer, 5 mm:

black	Art.-Nr. 4514-020050
grey	Art.-Nr. 4514-020051
red	Art.-Nr. 4514-020052
blue	Art.-Nr. 4514-020053
green	Art.-Nr. 4514-020054

Caps, black, set of 2:
Art.-Nr. 4514-020010

Caps, grey, set of 2:
Art.-Nr. 4514-020011

Caps, red, set of 2:
Art.-Nr. 4514-020012

Caps, blue, set of 2:
Art.-Nr. 4514-020013

Caps, green, set of 2:
Art.-Nr. 4514-020014

www.METALIKA-KACIN.com

Polymer hinges www.metalika-kacin.com

Locking technology for cold storage

Edge-mounted hinge | Series 4004

- Robust composite hinge from plastic and stainless steel
- For cold storage doors
- Protection against unauthorized dismantling
- Rising
- Adjustability in 3 dimensions
- Corrosion-resistant
- Door weight capacity of max. 80 kg using 2 hinges
- Material: Metal/Plastic, brushed stainless steel

Adjustability

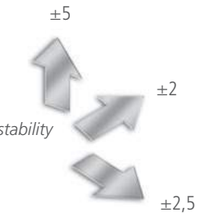

Height adjustment

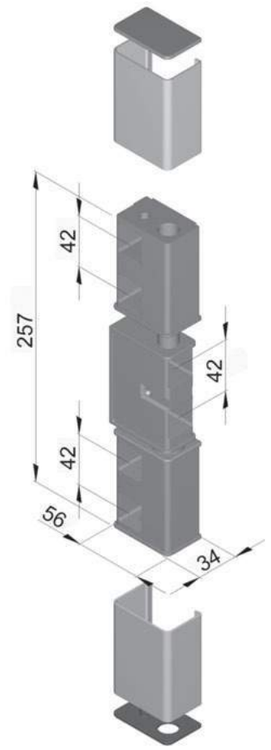

Transport securing clip

Edge-mounted hinge:

Black, stainless steel:

right hand	Art.-Nr. 4004-020100
left hand	Art.-Nr. 4004-020101

Option:

Spacer 5 mm:

Art.-Nr. 4004-020010

www.METALIKA-KACIN.com

Locking technology for cold storage

Edge-mounted hinge | Series 4006

- Edge-mounted hinge with stainless steel appearance
- For cold storage doors
- Protection against unauthorized dismantling
- Rising
- Lift-off capability
- Adjustability in 3 dimensions
- Corrosion-resistant
- Door weight capacity of max. 40 kg using 2 hinges
- Material: Metal/Plastic, brushed stainless steel

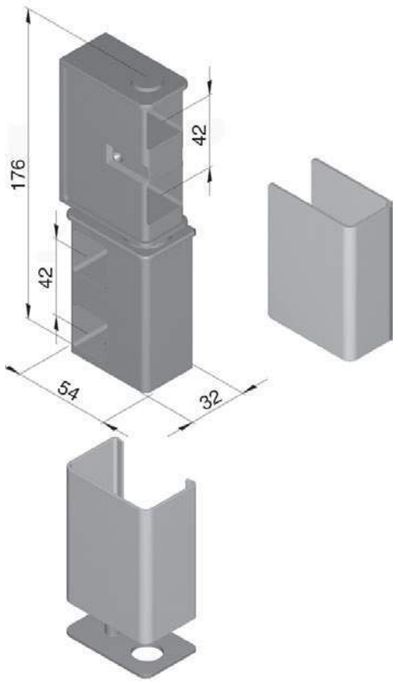

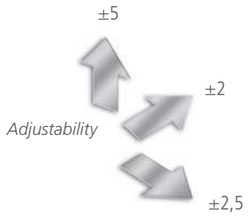

Height adjustment

Edge-mounted hinge:

Black, stainless steel:

right hand Art.-Nr. 4006-020102
left hand Art.-Nr. 4006-020103

Option:

Spacer 5 mm:
Art.-Nr. 4004-020010

Polymer hinges www.metalika-kacin.com

Locking technology for cold storage

Edge-mounted hinge | Series 7514 | BONO

- Modern hinge for customised colour-schemes and highest standards
- For cold storage doors
- Adjustability in 3 dimensions
- Choice of rising and non-rising
- Left- and right-hinged doors
- Wide variety in surface finishes
- Coloured caps, removable
- Protection against unauthorized dismantling
- Spacers in 5 mm increments
- Door weight capacity of max. 80 kg using 2 hinges
- Material: Metal, zinc die-cast, plastic
- Caps of plastic

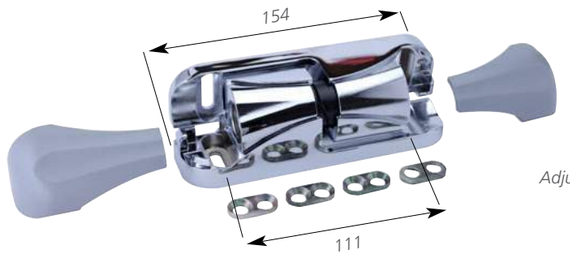

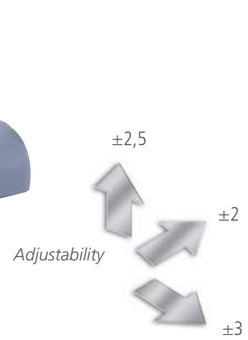

Surface finishes:

Chromium-plated:

right hand, rising Art.-Nr. 7514-020070
left hand, rising Art.-Nr. 7514-020071
right hand non-rising Art.-Nr. 7514-020072
left hand non-rising Art.-Nr. 7514-020073

Grey (RAL 7001):

right hand, rising Art.-Nr. 7514-20080
left hand, rising Art.-Nr. 7514-20081
right hand non-rising Art.-Nr. 7514-02082
left hand non-rising Art.-Nr. 7514-20083

Caps, single, grey:

right hand Art.-Nr. 7514-020004
left hand Art.-Nr. 7514-020005

Caps, single, black:

right hand Art.-Nr. 7514-020006
left hand Art.-Nr. 7514-020007

Caps, single, blue:

right hand Art.-Nr. 7514-020008
left hand Art.-Nr. 7514-020009

Option:

Spacer, 5 mm, grey:
Art.-Nr. 7514-020030

Spacer, 5 mm, black:
Art.-Nr. 7514-020031

Spacer, 5 mm, blue:
Art.-Nr. 7514-020032

Locking technology for cold storage

Plastic hinge | Series 4010 | LIFTO

- Plastic hinge in colored retro-look
- For cold storage doors
- Rising
- Adjustability in 2 dimensions
- Left- and right-hinged doors
- Lift-off capability
- Wide variety in surface finishes
- Coloured caps, removable
- Door weight capacity of max. 40 kg using 2 hinges
- Material: Lug, leaf, caps - plastic; Pin - galvanized steel

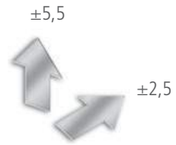

Adjustability

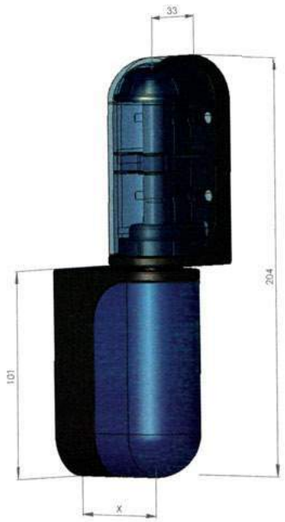

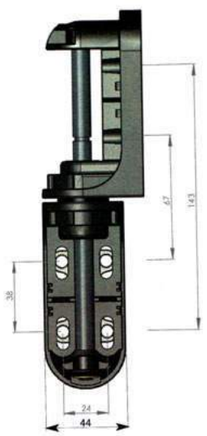

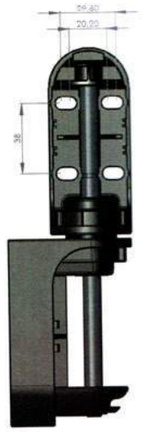

Plastic hinge:

Dimension X = 33 mm Art.-Nr. 4010-020001
Dimension X = 45 mm Art.-Nr. 4010-020002
Dimension X = 56 mm Art.-Nr. 4010-020003

Caps:

grey	Art.-Nr. 4010-020010
blue	Art.-Nr. 4010-020011
black	Art.-Nr. 4010-020012

www.METALIKA-KACIN.com

Polymer hinges www.metalika-kacin.com

Locking technology for cold storage

Plastic hinge | Series 7805 | ARCTO

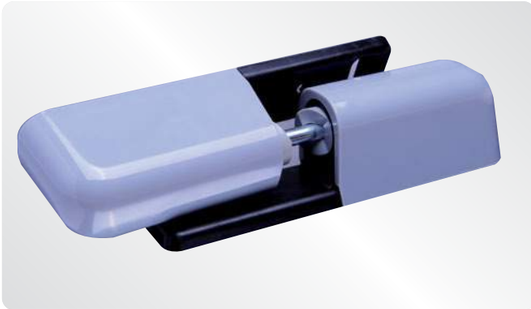

- Complementary hinge for multicolour latch system
- For cold storage doors
- Adjustable in 3 dimensions
- To be used with right- and left-hinged doors
- Lift-off capability for door maintenance
- Removable caps, coloured
- Door weight capacity max. 40 kg using 2 hinges
- Material:
  Lug, leaf, caps - plastic; Pin - stainless steel

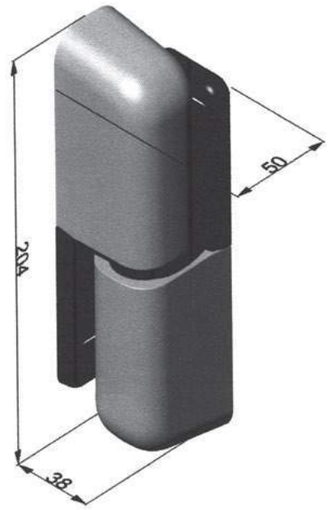

Plastic hinge:

Art.-Nr. 7805-020010

Option:

Spacer, 5 mm:

Art.-Nr. 7805-020005

www.METALIKA-KACIN.com

Locking technology for refrigerated furnishings

Edge-mounted hinge / Spring-loaded hinge | Series 4513

- Edge-mounted hinge with optional self-closing assistance
- For refrigerated furnishings, underbars and more
- Quick and easy assembly
- Protection against unauthorized dismantling
- To be used for left- and right-hinged doors
- Spring-loaded hinge self-closes when door is open 45° or less
- Door weight capacity of max. 20 kg (2 hinges)
- Wide variety of surface colourings
- Material: Hinge - plastic (weatherproof);
  Springs - stainless steel

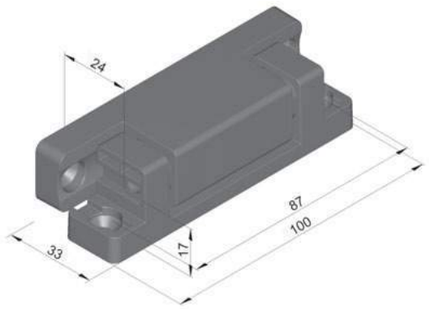

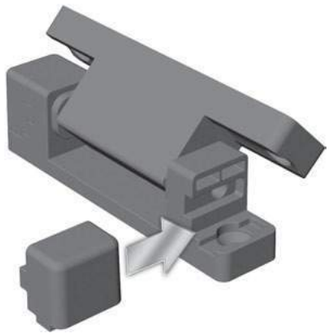

Variations:

Black, spring-loaded:

Art-Nr. 4513-020650

Black, without spring:

Art-Nr. 4513-020651

Option:

Spacer, 4,5 mm:

Art-Nr. 4513-020652

Hinges with soft-closing stainless steel / plastic

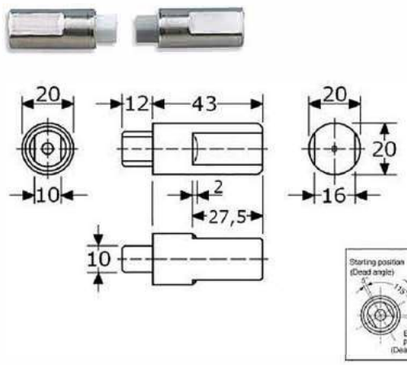

application

460-205

hinges ø20mm with soft-closing dampening
stainless steel 304/A2 (marked with blue point)
with white plastic shaft (UDH-AMS)
dampening direction: counter clockwise
with torque 15-25 Kg/cm (friction not adjustable)
the hinge can be used for 0°C. till +40°C.
total length 55mm, to build in, maximum hook 115°
from 115°-80° only working with enough gravity
in boxes of 20 Pcs.

460-206

hinges ø20mm with soft-closing dampening
stainless steel 304/A2 (marked with blue point)
with grey plastic shaft (UDH-BMS)
dampening direction: clockwise
with torque 15-25 Kg/cm (friction not adjustable)
the hinge can be used for 0°C. till +40°C.
total length 55mm, to build in, maximum hook 115°
from 115°-80° only working with enough gravity
in boxes of 20 Pcs.

460-207

hinges ø20mm with soft-closing dampening
stainless steel 304/A2 (marked with red point)
with white plastic shaft (UDH-AHS)
dampening direction: counter clockwise
with torque 25-35 Kg/cm (friction not adjustable)
the hinge can be used for 0°C. till +40°C.
total length 55mm, to build in, maximum hook 115°
from 115°-80° only working with enough gravity
in boxes of 20 Pcs.

460-208

hinges ø20mm with soft-closing dampening
stainless steel 304/A2 (marked with red point)
with grey plastic shaft (UDH-BHS)
dampening direction: clockwise
with torque 25-35 Kg/cm (friction not adjustable)
the hinge can be used for 0°C. till +40°C.
total length 55mm, to build in, maximum hook 115°
from 115°-80° only working with enough gravity
in boxes of 20 Pcs.

460-247

hinges ø14mm with soft-closing dampening
stainless steel 304/A2 (marked with red point)
with white plastic shaft (UDH-14-AHS)
dampening direction: counter clockwise
with torque 15-25 Kg/cm (friction not adjustable)
the hinge can be used for 0°C. till +40°C.
total length 37mm, to build in, maximum hook 115°
from 115°-80° only working with enough gravity
in boxes of 20 Pcs.

460-248

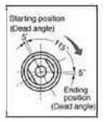

hinges ø14mm with soft-closing dampening
stainless steel 304/A2 (marked with red point)
with grey plastic shaft (UDH-14-BHS)
dampening direction: clockwise
with torque 25-35 Kg/cm (friction not adjustable)
the hinge can be used for 0°C. till +40°C.
total length 37mm, to build in, maximum hook 115°
from 115°-80° only working with enough gravity
in boxes of 20 Pcs.

Hinges plastic, lift-off, left

Description

Material:
Fibreglass reinforced thermoplastic.
Hinge pin stainless steel.

Version:
Hinge black. Pin bright.

Note:
All hinges can be supplied on request with guide tabs for the slots of aluminium profiles (slots 6, 8 and 10). They facilitate mounting, secure the hinge against twisting and make it stronger.

Drawings

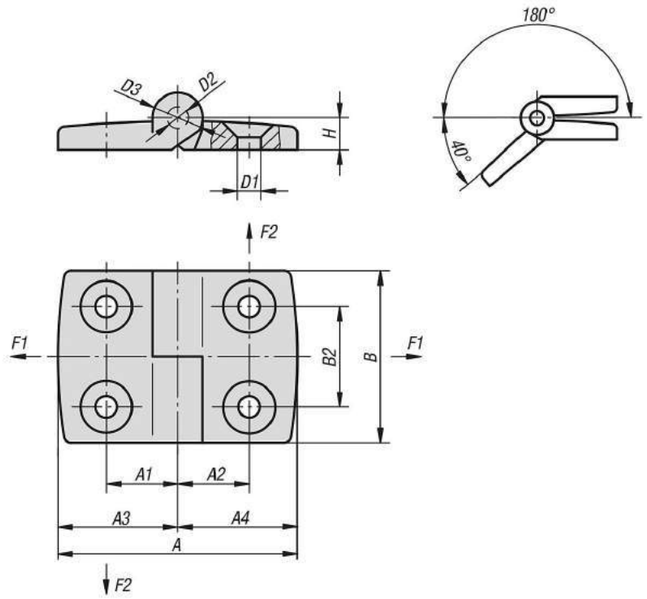

Overview of items

Hinges plastic, lift-off, left

Order No.	A	A1	A2	A3	A4	B	B2	D1	D2	D3	H	F1 max. kN	F2 max. kN
0434.1251515	52	15	15	26	26	48	28	6,6	6	14	9	0,625	0,425
0434.1251518	55,5	15	17,5	26	29,5	48	28	6,6	6	14	9	0,7	0,5
0434.1251520	61,5	15	20	26	35,5	48	28	6,6	6	14	9	0,7	0,4
0434.1251523	64,5	15	22,5	26	38,5	48	28	6,6	6	14	9	0,8	0,35
0434.1251525	69,5	15	25	26	43,5	48	28	6,6	6	14	9	0,8	0,325
0434.1251528	74,5	15	27,5	26	48,5	48	28	6,6	6	14	9	0,8	0,32
0434.1251533	83,5	15	32,5	26	57,5	48	28	6,6	6	14	9	0,8	0,24

www.METALIKA-KACIN.com

Polymer hinges www.metalika-kacin.com

Hinges plastic, lift-off, left

Order No.	A	A1	A2	A3	A4	B	B2	D1	D2	D3	H	F1 max. kN	F2 max. kN
0434.1301815	55,5	17,5	15	29,5	26	48	28	6,6	6	14	9	0,75	0,45
0434.1301818	59	17,5	17,5	29,5	29,5	48	28	6,6	6	14	9	0,75	0,5
0434.1301820	65	17,5	20	29,5	35,5	48	28	6,6	6	14	9	0,75	0,4
0434.1301823	68	17,5	22,5	29,5	38,5	48	28	6,6	6	14	9	0,8	0,35
0434.1301825	73	17,5	25	29,5	43,5	48	28	6,6	6	14	9	0,8	0,35
0434.1301828	78	17,5	27,5	29,5	48,5	48	28	6,6	6	14	9	0,8	0,35
0434.1301833	87	17,5	32,5	29,5	57,5	48	28	6,6	6	14	9	0,8	0,24
0434.1352015	61,5	20	15	35,5	26	48	28	6,6	6	14	9	0,75	0,4
0434.1352018	65	20	17,5	35,5	29,5	48	28	6,6	6	14	9	0,75	0,5
0434.1352020	71	20	20	35,5	35,5	48	28	6,6	6	14	9	0,75	0,4
0434.1352023	74	20	22,5	35,5	38,5	48	28	6,6	6	14	9	0,8	0,35
0434.1352025	79	20	25	35,5	43,5	48	28	6,6	6	14	9	0,8	0,35
0434.1352028	84	20	27,5	35,5	48,5	48	28	6,6	6	14	9	0,9	0,35
0434.1352033	93	20	32,5	35,5	57,5	48	28	6,6	6	14	9	0,8	0,24
0434.1402315	64,5	22,5	15	38,5	26	48	28	6,6	6	14	9	0,65	0,425
0434.1402318	68	22,5	17,5	38,5	29,5	48	28	6,6	6	14	9	0,75	0,5
0434.1402320	74	22,5	20	38,5	35,5	48	28	6,6	6	14	9	0,75	0,4
0434.1402323	77	22,5	22,5	38,5	38,5	48	28	6,6	6	14	9	0,8	0,4
0434.1402328	87	22,5	27,5	38,5	48,5	48	28	6,6	6	14	9	0,8	0,35
0434.1402333	96	22,5	32,5	38,5	57,5	48	28	6,6	6	14	9	0,8	0,24
0434.1452515	69,5	25	15	43,5	26	48	28	6,6	6	14	9	0,65	0,425
0434.1452518	73	25	17,5	43,5	29,5	48	28	6,6	6	14	9	0,75	0,5
0434.1452520	79	25	20	43,5	35,5	48	28	6,6	6	14	9	0,7	0,4
0434.1452523	82	25	22,5	43,5	38,5	48	28	6,6	6	14	9	0,8	0,35
0434.1452525	87	25	25	43,5	43,5	48	28	6,6	6	14	9	0,8	0,325
0434.1452528	92	25	27,5	43,5	48,5	48	28	6,6	6	14	9	0,8	0,32
0434.1452533	101	25	32,5	43,5	57,5	48	28	6,6	6	14	9	0,8	0,24
0434.1502815	74,5	27,5	15	48,5	26	48	28	6,6	6	14	9	0,65	0,425
0434.1502818	78	27,5	17,5	48,5	29,5	48	28	6,6	6	14	9	0,75	0,5
0434.1502820	84	27,5	20	48,5	35,5	48	28	6,6	6	14	9	0,7	0,4
0434.1502823	87	27,5	22,5	48,5	38,5	48	28	6,6	6	14	9	0,8	0,35
0434.1502825	92	27,5	25	48,5	43,5	48	28	6,6	6	14	9	0,8	0,325
0434.1502828	97	27,5	27,5	48,5	48,5	48	28	6,6	6	14	9	0,8	0,32
0434.1502833	106	27,5	32,5	48,5	57,5	48	28	6,6	6	14	9	0,8	0,24
0434.1603315	83,5	32,5	15	57,5	26	48	28	6,6	6	14	9	0,65	0,425
0434.1603318	87	32,5	17,5	57,5	29,5	48	28	6,6	6	14	9	0,75	0,5
0434.1603320	93	32,5	20	57,5	35,5	48	28	6,6	6	14	9	0,7	0,4
0434.1603323	96	32,5	22,5	57,5	38,5	48	28	6,6	6	14	9	0,8	0,35
0434.1603325	101	32,5	25	57,5	43,5	48	28	6,6	6	14	9	0,8	0,325
0434.1603328	106	32,5	27,5	57,5	48,5	48	28	6,6	6	14	9	0,9	0,32
0434.1603333	115	32,5	32,5	57,5	57,5	48	28	6,6	6	14	9	0,9	0,24

www.METALIKA-KACIN.com

Hinges plastic, lift-off, right

Description

Material:
Fibreglass reinforced thermoplastic.
Hinge pin stainless steel.

Version:
Hinge black. Pin bright.

Note:
All hinges can be supplied on request with guide tabs for the slots of aluminium profiles (slots 6, 8 and 10). They facilitate mounting, secure the hinge against twisting and make it stronger.

Drawings

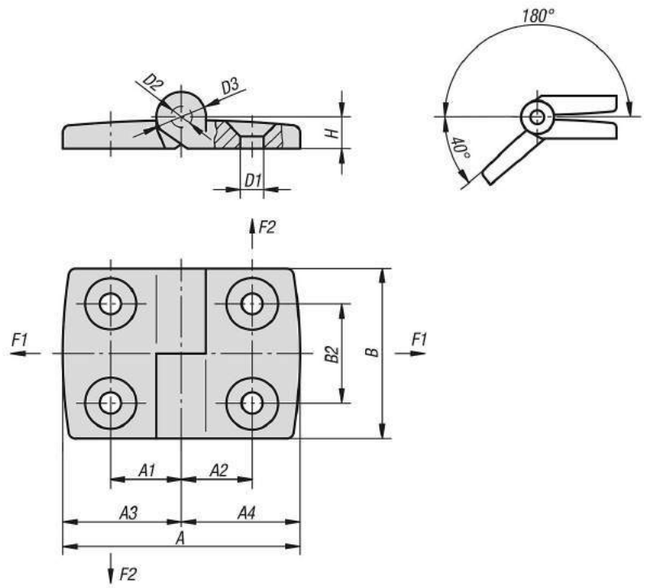

Overview of items

Hinges plastic, lift-off, right

Order No.	A	A1	A2	A3	A4	B	B2	D1	D2	D3	H	F1 max. kN	F2 max. kN
0434.2251515	52	15	15	26	26	48	28	6,6	6	14	9	0,625	0,425
0434.2251518	55,5	15	17,5	26	29,5	48	28	6,6	6	14	9	0,7	0,5
0434.2251520	61,5	15	20	26	35,5	48	28	6,6	6	14	9	0,7	0,4
0434.2251523	64,5	15	22,5	26	38,5	48	28	6,6	6	14	9	0,8	0,35
0434.2251525	69,5	15	25	26	43,5	48	28	6,6	6	14	9	0,8	0,325
0434.2251528	74,5	15	27,5	26	48,5	48	28	6,6	6	14	9	0,8	0,32
0434.2251533	83,5	15	32,5	26	57,5	48	28	6,6	6	14	9	0,8	0,24
0434.2301815	55,5	17,5	15	29,5	26	48	28	6,6	6	14	9	0,75	0,45

www.METALIKA-KACIN.com

Hinges plastic, lift-off, right

Order No.	A	A1	A2	A3	A4	B	B2	D1	D2	D3	H	F1 max. kN	F2 max. kN
0434.2301818	59	17,5	17,5	29,5	29,5	48	28	6,6	6	14	9	0,75	0,5
0434.2301820	65	17,5	20	29,5	35,5	48	28	6,6	6	14	9	0,7	0,4
0434.2301823	68	17,5	22,5	29,5	38,5	48	28	6,6	6	14	9	0,8	0,35
0434.2301825	73	17,5	25	29,5	43,5	48	28	6,6	6	14	9	0,8	0,35
0434.2301828	78	17,5	27,5	29,5	48,5	48	28	6,6	6	14	9	0,8	0,35
0434.2301833	87	17,5	32,5	29,5	57,5	48	28	6,6	6	14	9	0,8	0,24
0434.2352015	61,5	20	15	35,5	26	48	28	6,6	6	14	9	0,7	0,4
0434.2352018	65	20	17,5	35,5	29,5	48	28	6,6	6	14	9	0,75	0,5
0434.2352020	71	20	20	35,5	35,5	48	28	6,6	6	14	9	0,75	0,4
0434.2352023	74	20	22,5	35,5	38,5	48	28	6,6	6	14	9	0,8	0,35
0434.2352025	79	20	25	35,5	43,5	48	28	6,6	6	14	9	0,8	0,35
0434.2352028	84	20	27,5	35,5	48,5	48	28	6,6	6	14	9	0,8	0,35
0434.2352033	93	20	32,5	35,5	57,5	48	28	6,6	6	14	9	0,8	0,24
0434.2402315	64,5	22,5	15	38,5	26	48	28	6,6	6	14	9	0,65	0,425
0434.2402318	68	22,5	17,5	38,5	29,5	48	28	6,6	6	14	9	0,75	0,5
0434.2402320	74	22,5	20	38,5	35,5	48	28	6,6	6	14	9	0,75	0,4
0434.2402323	77	22,5	22,5	38,5	38,5	48	28	6,6	6	14	9	0,8	0,35
0434.2402325	82	22,5	25	38,5	43,5	48	28	6,6	6	14	9	0,8	0,35
0434.2402328	87	22,5	27,5	38,5	48,5	48	28	6,6	6	14	9	0,8	0,35
0434.2402333	96	22,5	32,5	38,5	57,5	48	28	6,6	6	14	9	0,8	0,24
0434.2452515	69,5	25	15	43,5	26	48	28	6,6	6	14	9	0,65	0,425
0434.2452518	73	25	17,5	43,5	29,5	48	28	6,6	6	14	9	0,75	0,5
0434.2452520	79	25	20	43,5	35,5	48	28	6,6	6	14	9	0,7	0,4
0434.2452523	82	25	22,5	43,5	38,5	48	28	6,6	6	14	9	0,8	0,35
0434.2452525	87	25	25	43,5	43,5	48	28	6,6	6	14	9	0,8	0,325
0434.2452528	92	25	27,5	43,5	48,5	48	28	6,6	6	14	9	0,8	0,32
0434.2452533	101	25	32,5	43,5	57,5	48	28	6,6	6	14	9	0,8	0,24
0434.2502815	74,5	27,5	15	48,5	26	48	28	6,6	6	14	9	0,65	0,425
0434.2502818	78	27,5	17,5	48,5	29,5	48	28	6,6	6	14	9	0,75	0,5
0434.2502820	84	27,5	20	48,5	35,5	48	28	6,6	6	14	9	0,7	0,4
0434.2502823	87	27,5	22,5	48,5	38,5	48	28	6,6	6	14	9	0,8	0,35
0434.2502825	92	27,5	25	48,5	43,5	48	28	6,6	6	14	9	0,8	0,325
0434.2502828	97	27,5	27,5	48,5	48,5	48	28	6,6	6	14	9	0,8	0,32
0434.2502833	106	27,5	32,5	48,5	57,5	48	28	6,6	6	14	9	0,8	0,24
0434.2603315	83,5	32,5	15	57,5	26	48	28	6,6	6	14	9	0,65	0,425
0434.2603318	87	32,5	17,5	57,5	29,5	48	28	6,6	6	14	9	0,75	0,5
0434.2603320	93	32,5	20	57,5	35,5	48	28	6,6	6	14	9	0,7	0,4
0434.2603323	96	32,5	22,5	57,5	38,5	48	28	6,6	6	14	9	0,8	0,35
0434.2603325	101	32,5	25	57,5	43,5	48	28	6,6	6	14	9	0,8	0,325
0434.2603328	106	32,5	27,5	57,5	48,5	48	28	6,6	6	14	9	0,9	0,32
0434.2603333	115	32,5	32,5	57,5	57,5	48	28	6,6	6	14	9	0,9	0,24

www.METALIKA-KACIN.com

Hinges plastic, with elongated holes

Description

Material:
Fibreglass reinforced thermoplastic.
Hinge pin stainless steel.

Version:
Hinge black. Pin bright.

Note:
Elongated holes enable easy horizontal adjustment.

Drawings

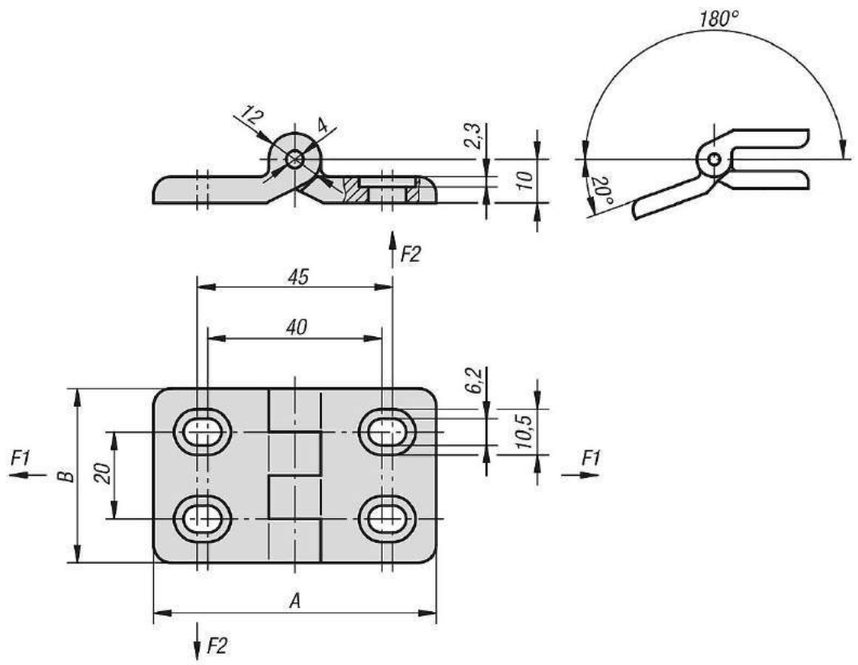

Overview of items

Hinge plastic, with elongated holes

Order No.	A	B	F1 max. kN	F2 max. kN
0437.402020	65	40	0,5	0,3

www.METALIKA-KACIN.com

Polymer hinges www.metalika-kacin.com

Hinges plastic, lift-off, with guide tabs

Description

Material:
Fibreglass reinforced thermoplastic.
Hinge pin stainless steel.
Washer thermoplastic.

Version:
Hinge and washer black. Pin bright.

Note:
The guide tabs permit the hinges to be mounted in slots (8 mm).

Drawings

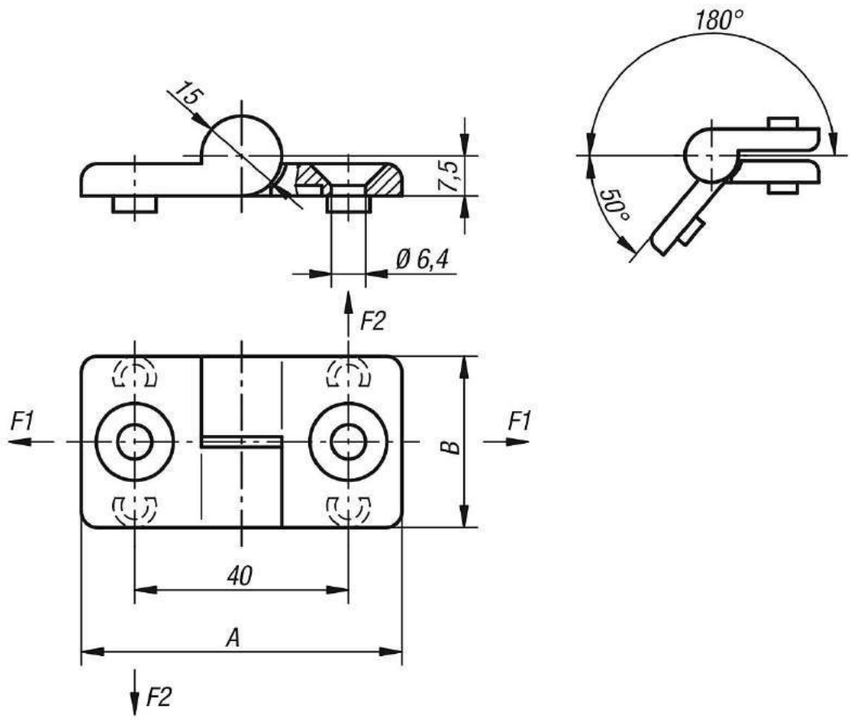

Overview of items

Order No.	Version	A	B	F1 max. kN	F2 max. kN
0438.1322020	left	60	32	0,2	0,1
0438.2322020	right	60	32	0,2	0,1

www.METALIKA-KACIN.com