Zatezna zapirala
Toggle latches

METALIKA KACIN

Slovenija
(+386) 04 510 53 60
info@metalika-kacin.com
Hrvatska
(+385) 051 213 060
hrvatska@metalika-kacin.com
Srbija
(+381) 011 25 21 756
srbija@metalika-kacin.com

Typ 726 Verschlüsse mit Schraubverstellung, ca. 200 mm Gesamtlänge und bis 225 mm verstellbar, mit M8 Gewinde, größte Breite 65 mm, für 28/30 mm breite Schließhaken

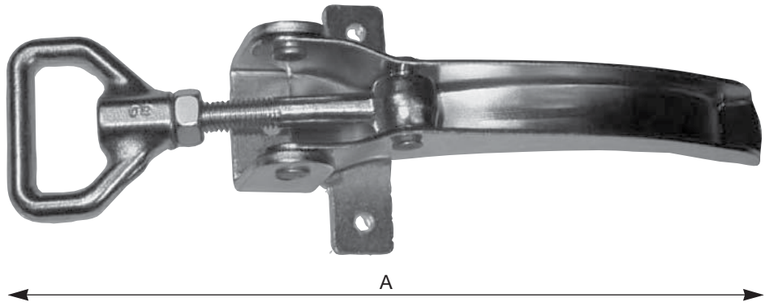

726 1. .. Stahl-roh, ungelocht
726 2. .. Stahl-roh, gelocht
726 4. .. Stahl galvanisch-verzinkt, gelocht

Artikel-Nr.:	A	Breite	passender Schließhaken siehe Seite 101/102	
	mm	mm	Art.-Nr.:	Abmessung
... .0 81	200/225	65	728	28 x 38
			729	30 x 110

Typ 726 Verschlüsse aus Nirosta WS 1.4301

726 6. .. Nirosta, gelocht

Artikel-Nr.:	A	Breite	passender Schließhaken siehe Seite 101/102	
	mm	mm	Art.-Nr.:	Abmessung
... .0 81	200/225	65	728	28 x 38
			729	30 x 110

Rotary toggle latches

Strike included.

Part number	Material	Finish	A	B	C	Note	Weight (g)
16-1-9012	steel	zinc plated	62	38	13.2	with strike	50
16-1-9013	304 stainless steel	raw	62	38	13.2	with strike	50

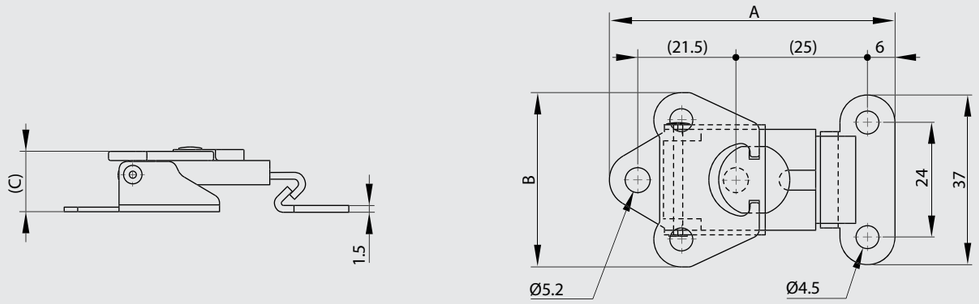

Spring loaded rotary toggle latches

Strike included.

Part number	Material	Finish	A	B	C	Note	Weight (g)
16-1-9014	steel	zinc plated	62	46	12	with strike	60
16-1-9015	304 stainless steel	raw	62	46	12	with strike	60

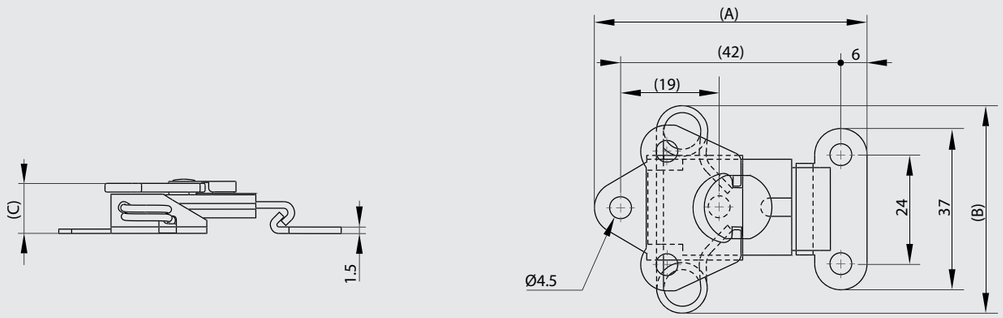

Padlockable rotary toggle latches

Strike included.

Part number	Material	Finish	A	B	C	Note	Weight (g)
16-1-9016	steel	zinc plated	64	38	24	with strike	60
16-1-9017	304 stainless steel	raw	64	38	24	with strike	60

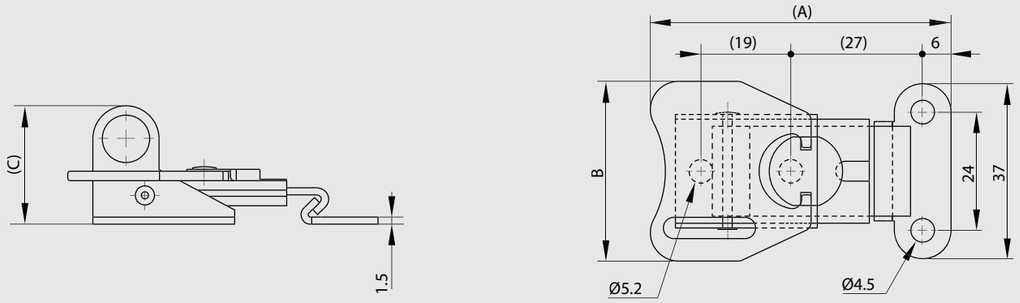

Lockable toggle latch without strike

Keyed alike (2 identical keys).
Strike not included.

	Part number	Material	Finish	A	B	C	Weight (g)
	16-1-4050	steel	zinc plated	106.5	40	17	132
NEW	16-1-9024	steel	black cataphoresis	106.5	40	17	132
	16-1-4257	304 stainless steel	raw	106.5	40	17	132

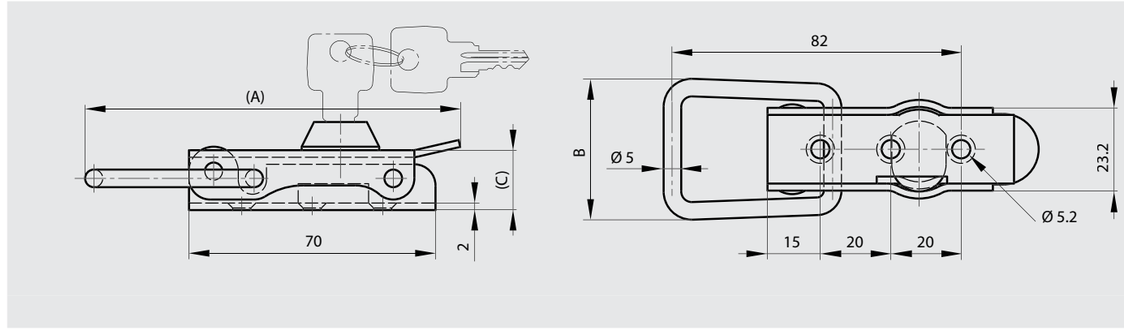

Strikes for part numbers 16-1-4050, 16-1-4257 and 16-7-9024

Possible alternative strikes: 16-1-4038, 16-7-3406 and 16-7-3870.

Part number	Material	Finish	A	B	Weight (g)
16-7-3551	steel	zinc plated	28	25	24
16-7-3601	304 stainless steel	raw	28	25	24

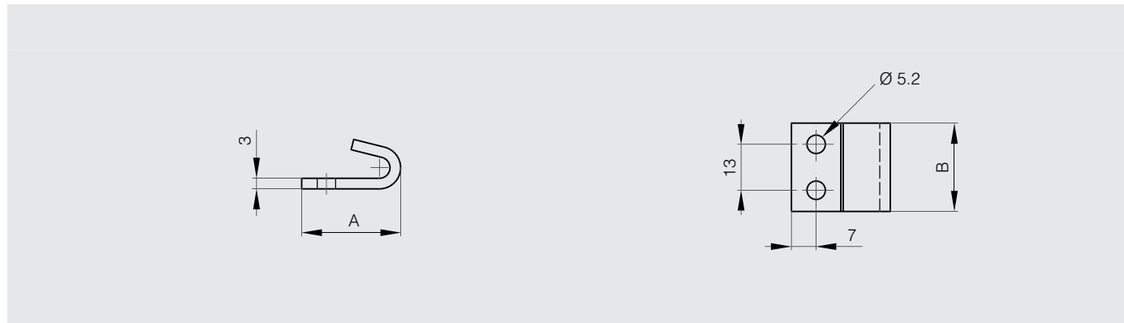

Zinc die-cast toggle latches with or without lockable options

STEEL RoHS STAINLESS STEEL

Available with or without keylock options.
Strike included.

Part number	Material	Finish	A	B	C	E	F	G	Note	Weight (g)
16-1-9003	zinc die-cast	black	64.5	26.5	17.3	13	12	30	with key	72
16-1-9004	zinc die-cast	black	64.5	26.5	17.3	13	12	30	without key	72
16-1-9001	zinc die-cast	black	76	32	21	16.8	16	35.5	with key	118
16-1-9002	zinc die-cast	black	76	32	21	16.8	16	35.5	without key	118
16-1-497538	zinc die-cast	chrom	64.5	26.5	17.3	13	12	30	with key	72
16-1-497539	zinc die-cast	chrom	64.5	26.5	17.3	13	12	30	without key	72
16-1-497534	zinc die-cast	chrom	76	32	21	16.8	16	35.5	with key	118
16-1-497535	zinc die-cast	chrom	76	32	21	16.8	16	35.5	without key	118
16-1-9001-VA	INOX 316	elektropolished	78	34	23	21	16	35.5	with key	132
16-1-9002-VA	INOX 316	elektropolished	78	34	20	21	16	33.7	without key	132

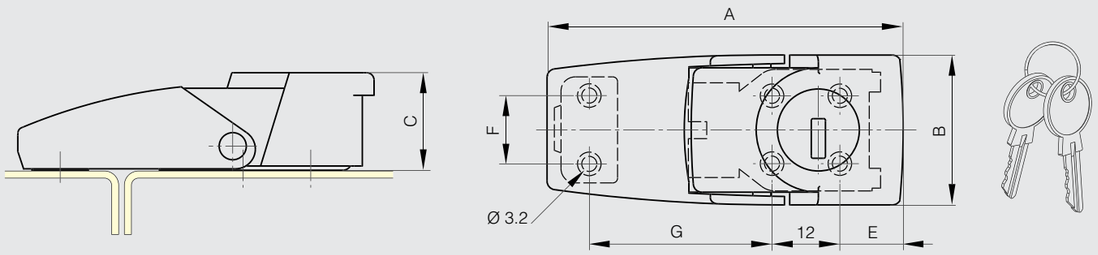

Zinc die-cast toggle latch with lockable options

ZAMAK RoHS

Strike included.

Part number	Material	Finish	A	B	C	E	F	G	Weight (g)
16-1-9005	zinc die-cast	black	92	36	25	12	12	28-32	168

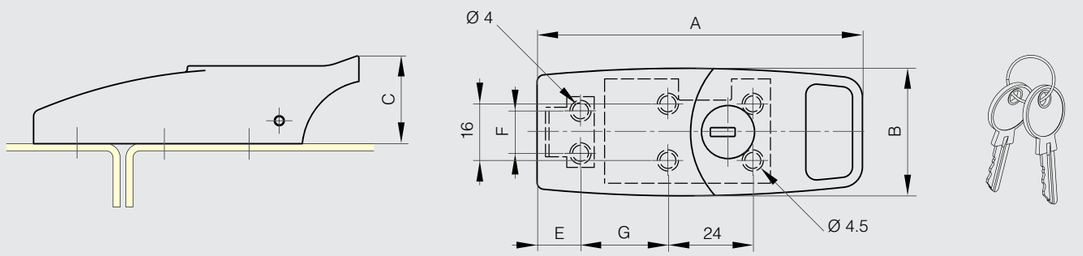

Soft toggle latch

POLYMER RoHS

Part number	Material	Finish	A	B	C	Weight (g)
16-1-9006	elastomer	black	96.5	29	20	36

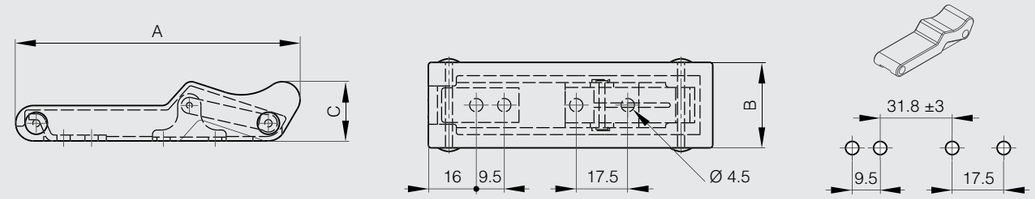

Large soft toggle latch

POLYMER RoHS

Stainless steel strike.

Part number	Material	Finish	A	B	C	Weight (g)
16-1-9011	elastomer	black	151	45.7	29.5	130

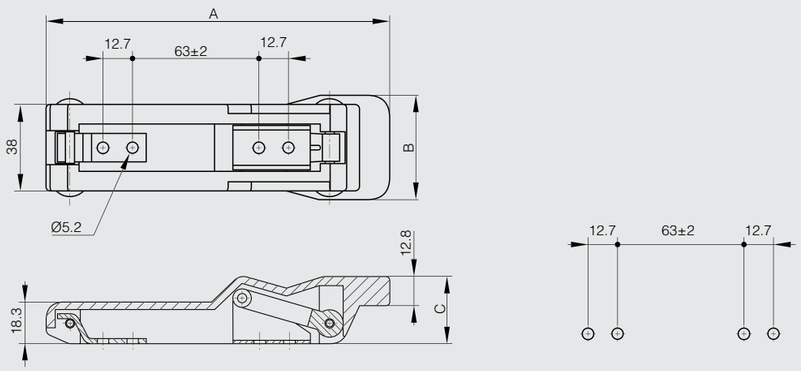

Flexible T-handle latch

Keeper and bracket is Nylon.

	Part number	Material	Finish	A	B	C	Weight (g)
NEW	16-7-4276	elastomer	black	112	47	34	39

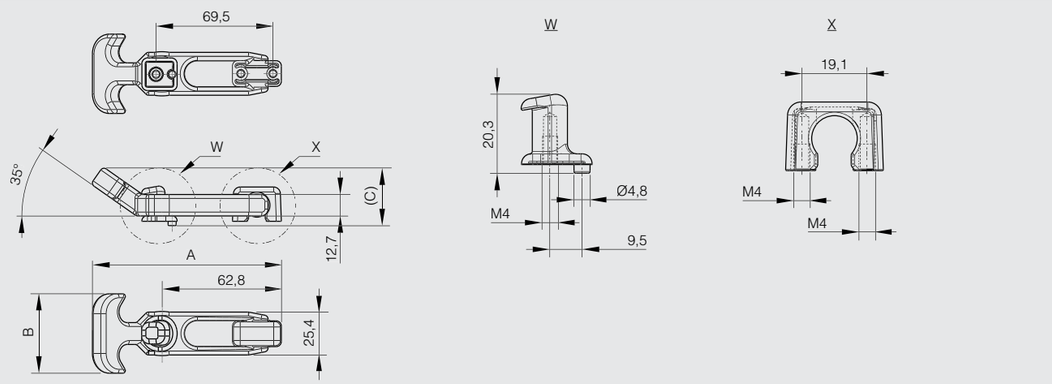

Mini toggle latch without strike - 30.5 mm

	Part number	Material	Finish	A	B	C	Weight (g)
NEW	16-1-4111	steel	zinc plated	30.5	15.4	6.5	4

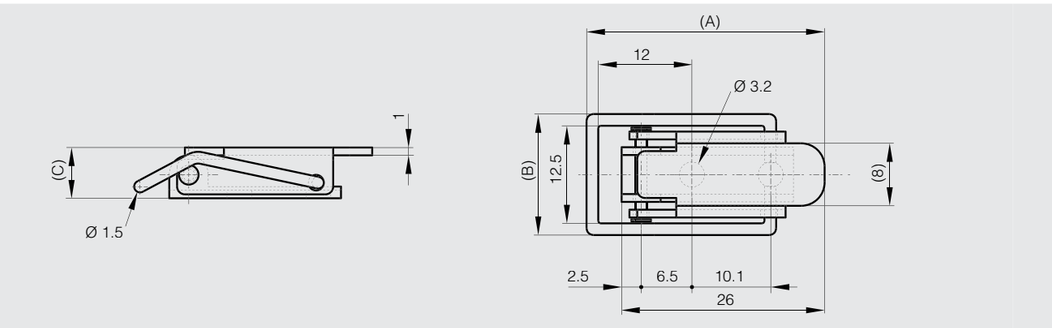

Toggle latches without strike - 50 mm

These latches are used with strike part numbers 16-7-3414, 16-7-3529 and 16-7-3531.
Padlockable option available for part number 16-7-3394.

Part number	Material	Finish	A	B	C	Note	Weight (g)
16-7-3410	steel	zinc plated	50	22	12.5	drilled	20
16-7-3525	304 stainless steel	raw	50	22	12.5	drilled	20
16-7-3527	304 stainless steel	raw	50	23.4	11.7	undrilled	20

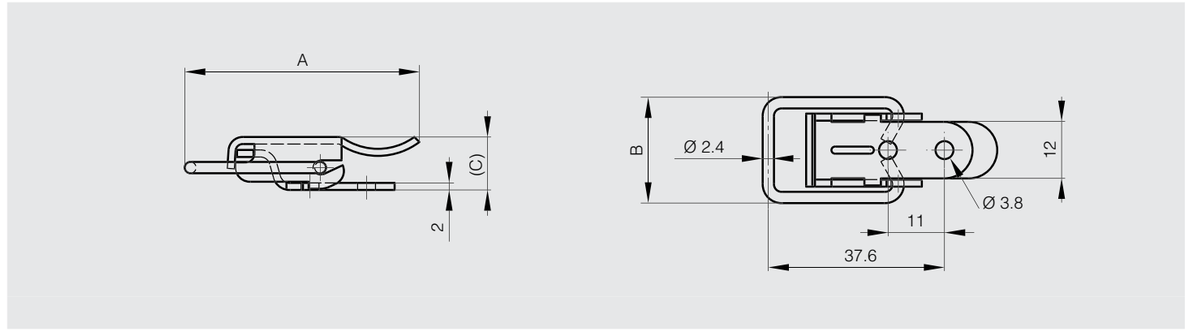

Strikes for part numbers 16-7-3410, 16-7-3525 and 16-7-3527

Part number	Material	Finish	A	B	C	D	E	Note	Weight (g)
16-7-3414	steel	zinc plated	13.7	24	1.5	14	5	drilled	3.5
16-7-3531	304 stainless steel	raw	13.4	24	1.5			undrilled	3.5
16-7-3529	304 stainless steel	raw	13.4	24	1.5	14	5	drilled	3.5

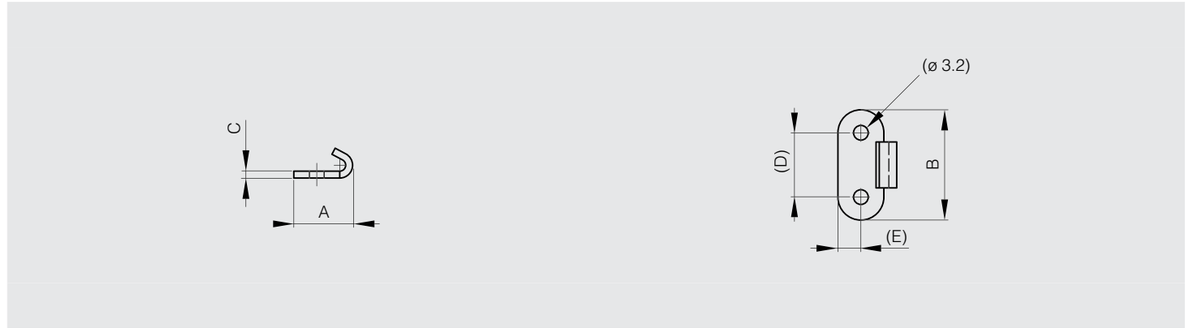

Toggle latches with strike - 52 mm

STAINLESS STEEL STEEL RoHS

Part number	Material	Finish	A	B	C	Padlockable	Weight (g)
16-7-3845	steel	zinc plated	52	41	13.5	no	23
16-7-3846	304 stainless steel	raw	52	41	13.5	no	23
420093	steel	zinc plated	52	41	13.5	yes	24

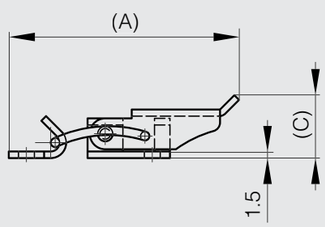

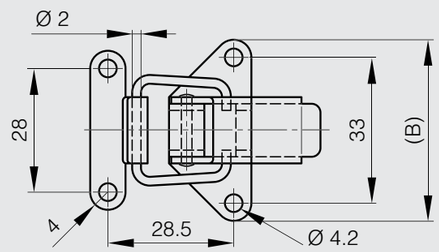

Toggle latch without strike - 73.5 mm

NEW

STEEL RoHS

With seal wire hole.
Strike not included.

	Part number	Material	Finish	A	B	C	Weight (g)
NEW	16-1-4130	steel	zinc plated	73.5	22	13	29

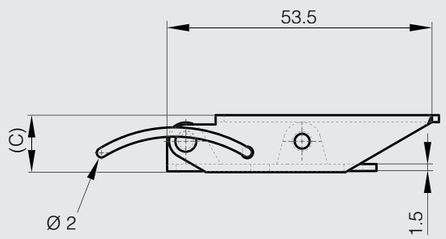

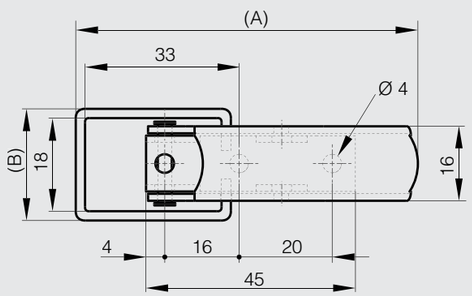

Toggle latches without strike - 58.1 mm

STAINLESS STEEL STEEL RoHS

This latch is used with strike, part numbers 16-7-3873 and 16-7-3874.

Part number	Material	Finish	A	B	C	Weight (g)
16-7-3875	steel	zinc plated	58.1	23.4	12.7	32
16-7-3876	304 stainless steel	raw	58.1	23.4	12.7	32

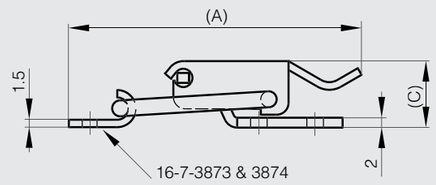

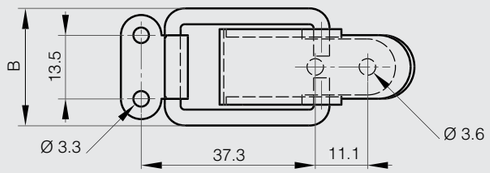

Strikes for part numbers 16-7-3875 and 16-7-3876

STAINLESS STEEL STEEL RoHS

Part number	Material	Finish	Weight (g)
16-7-3873	steel	zinc plated	3.5
16-7-3874	304 stainless steel	raw	3.5

Toggle latches without strike - 80.2 mm

STAINLESS STEEL STEEL RoHS

The latches are used with strikes part numbers 16-7-3415 and 16-7-3530.
Latches are available with padlockable option part numbers 16-7-3395, 16-7-3397, 16-7-3723 and 16-7-3724.

Part number	Material	Finish	A	B	C	Note	Weight (g)
16-7-3411	steel	zinc plated	80.2	32	14.5	drilled	53.5
16-7-3526	304 stainless steel	raw	80.2	32	14.5	drilled	53.5

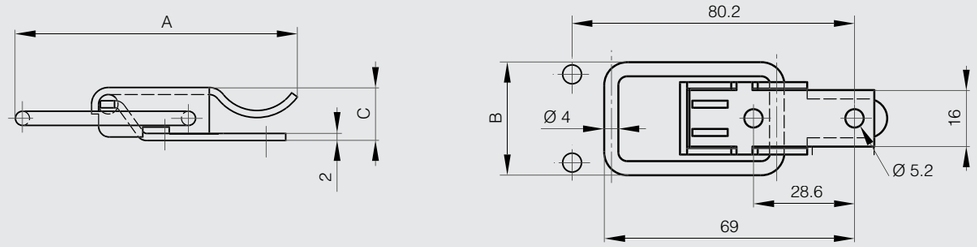

Strikes for part numbers 16-7-3411 and 16-7-3526

STAINLESS STEEL STEEL RoHS

Part number	Material	Finish	A	B	C	D	E	Note	Weight (g)
16-7-3415	steel	zinc plated	20	26.2	2	15	5.1	drilled	9
16-7-3530	304 stainless steel	raw	20	26.5	2	15	5.2	drilled	9

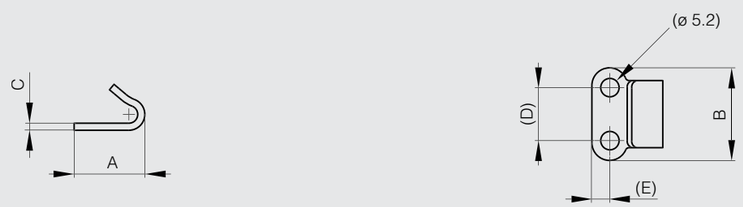

Toggle latch without strike - 89.7 mm

STEEL RoHS

This latch is used with strike part number 16-7-3881.

Part number	Material	Finish	A	B	C	Weight (g)
16-7-3880	steel	zinc plated	89.7	33	14.2	68

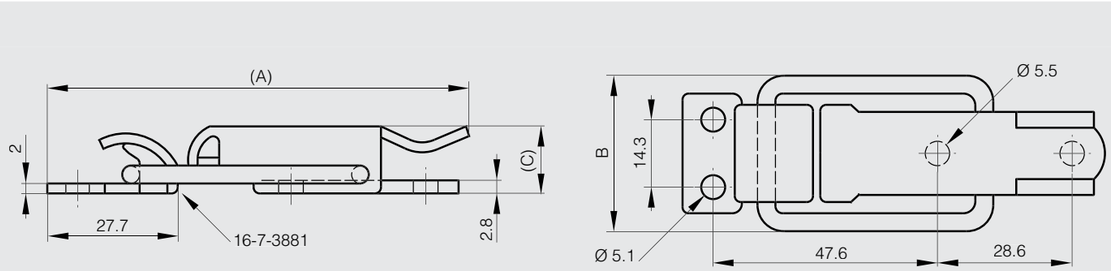

Strike for part number 16-7-3880

STEEL RoHS

Part number	Material	Finish	Weight (g)
16-7-3881	steel	zinc plated	9

Toggle latches without strike - 88.5 mm

STAINLESS STEEL STEEL RoHS

Punched holes.
These latches are used with strike part numbers 16-7-3551 and 16-7-3601.

Part number	Material	Finish	A	B	C	Weight (g)
16-7-3508	steel	zinc plated	88.5	40	20	106
16-7-3829	304 stainless steel	raw	88.5	40	20	106

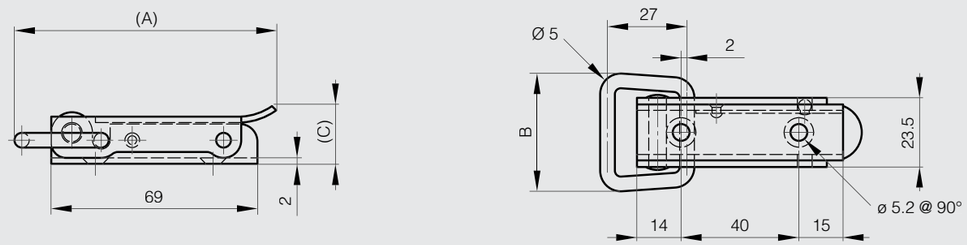

Strikes for part numbers 16-7-3508 and 16-7-3829

STAINLESS STEEL STEEL RoHS

Part number	Material	Finish	A	B	Weight (g)
16-7-3551	steel	zinc plated	28	25	24
16-7-3601	304 stainless steel	raw	28	25	24

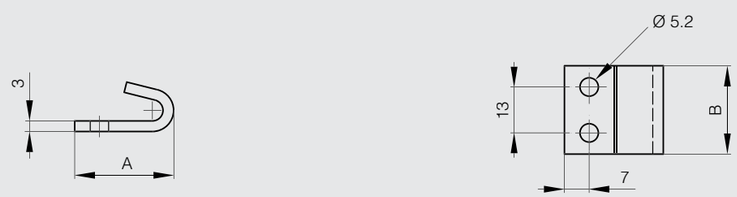

Other strikes for part numbers 16-7-3508 and 16-7-3829

STAINLESS STEEL STEEL RoHS

Drilled and countersunk for 4,5 mm diameter screws.

Part number	Material	Finish	A	B	Weight (g)
16-7-3406	steel	zinc plated	85	25	57
16-7-3828	304 stainless steel	raw	85	25	57

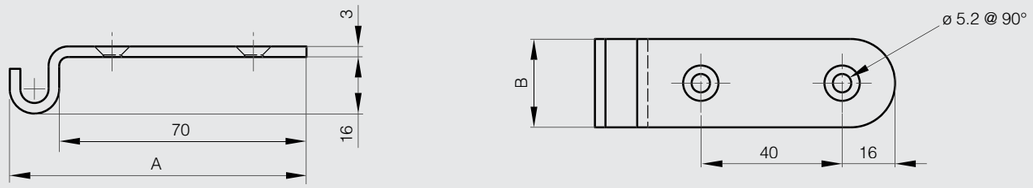

Other strikes for part number 16-7-3508

STEEL RoHS

Part number	Material	Finish	A	B	C	F	G	S	Weight (g)
16-1-4038	steel	zinc plated	63	25	3	8.8	26	4.5	42
16-7-3870	steel	zinc plated	63.5	20	2	7.9	19	5.4	24

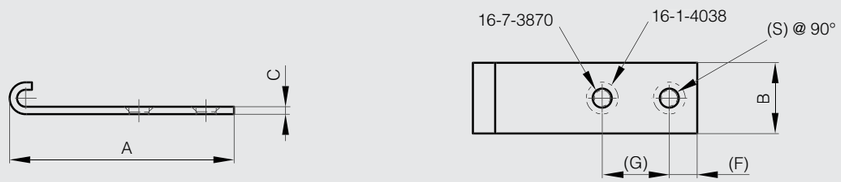

Toggle latches without strike (consistent tension)

This latch is used with strike part number 16-7-3874.

Part number	Material	Finish	A	B	C	Weight (g)
16-7-3891	304 stainless steel	raw	58.6	20.6	12.7	27

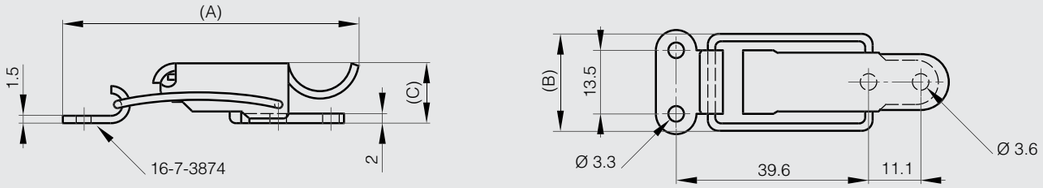

Strike for part number 16-7-3891

Part number	Material	Finish	Weight (g)
16-7-3874	304 stainless steel	raw	3.5

Toggles latches
www.metalika-kacin.com
Standard toggle latches

Heavy duty toggle latch with strike

	Part number	Material	Finish	A	B	Weight (g)
NEW	**16-7-4277**	steel	zinc plated	215.8	45	47

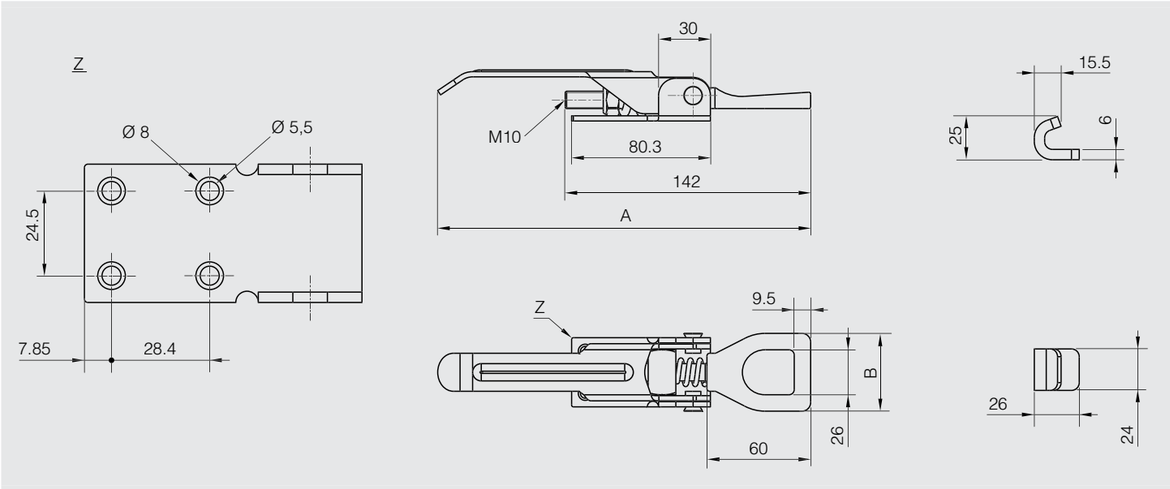

Padlockable toggle latches - 49 mm

STEEL RoHS

This latch is used with strike part number 16-7-3414.

Part number	Material	Finish	A	B	C	Weight (g)
16-7-3394	steel	zinc plated	49	22.5	19	25

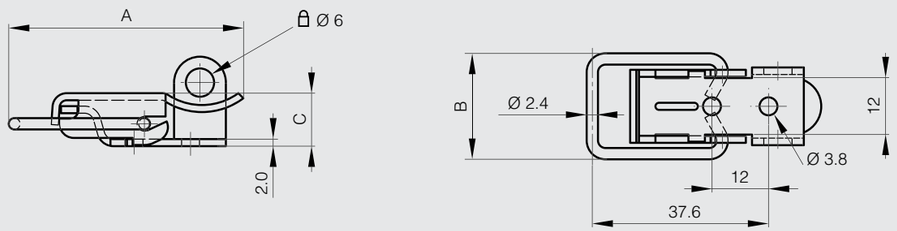

Strike for part number 16-7-3394

STEEL RoHS

Part number	Material	Finish	A	B	C	D	E	Note	Weight (g)
16-7-3414	steel	zinc plated	13.7	24	1.5	14	5	drilled	3.5

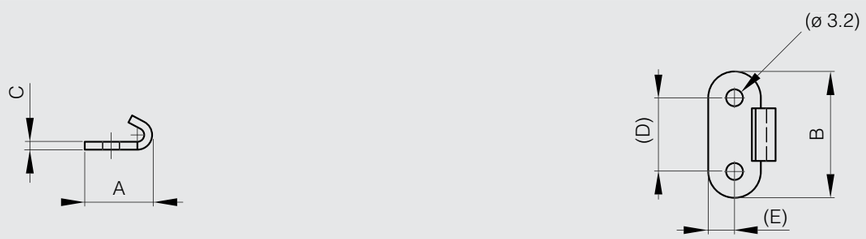

Padlockable toggle latch without strike - 65 mm

STEEL RoHS

This latch is used with strike part number 16-7-3878.

Part number	Material	Finish	A	B	C	Weight (g)
16-7-3879	steel	zinc plated	65	23.4	20.3	36

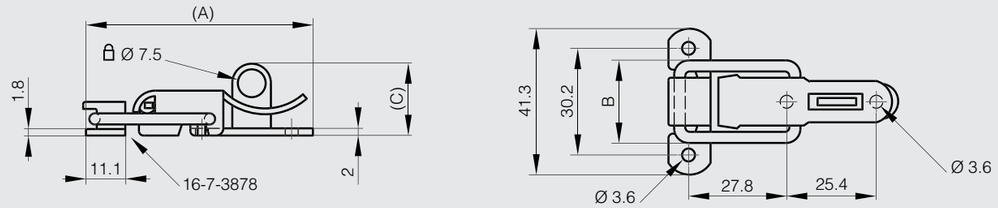

Strike for part number 16-7-3879

STEEL RoHS

Part number	Material	Finish	Weight (g)
16-7-3878	steel	zinc plated	4.5

Padlockable toggle latches - 80.2 mm

These latches are used with strike part numbers 16-7-3729 and 16-7-3730.

STAINLESS STEEL | STEEL | RoHS

Part number	Material	Finish	A	B	C	Note	Weight (g)
16-7-3723	steel	zinc plated	80.2	32	23.5	drilled	55
16-7-3724	304 stainless steel	raw	80.2	32	23.5	drilled	55

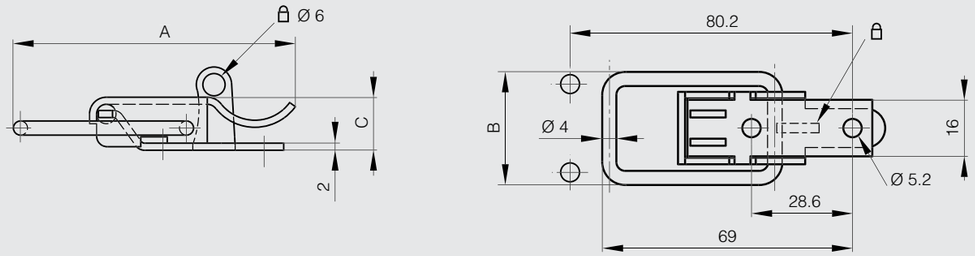

Strikes for part numbers 16-7-3723 and 16-7-3724

STAINLESS STEEL | STEEL | RoHS

Part number	Material	Finish	A	B	Note	Weight (g)
16-7-3729	steel	zinc plated	27.4	26	drilled	10
16-7-3730	304 stainless steel	raw	27.4	26	drilled	10

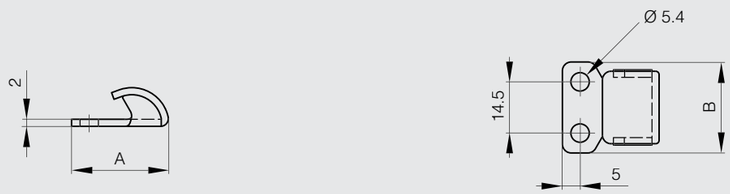

Padlockable toggle latches - 80.5 mm

This latch is used with strike part number 16-7-3415.

STEEL | RoHS

Part number	Material	Finish	A	B	C	Note	Weight (g)
16-7-3397	steel	raw	80.5	32	18.5	drilled	58.5
16-7-3395	steel	zinc plated	80.5	32	15	drilled	58.5

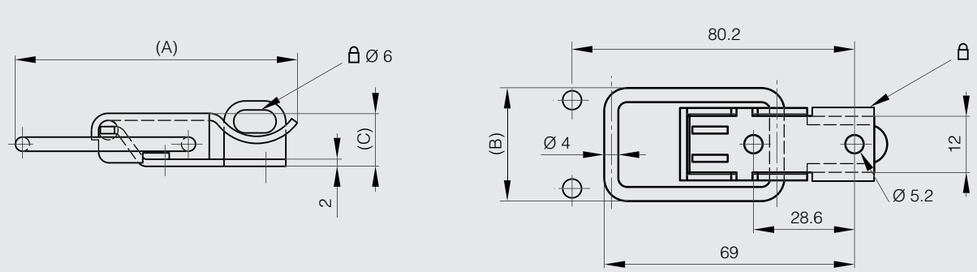

Strike for part numbers 16-7-3395 and 16-7-3397

STEEL | RoHS

Part number	Material	Finish	A	B	C	D	E	Note	Weight (g)
16-7-3415	steel	zinc plated	20	26.2	2	15	5.1	drilled	9

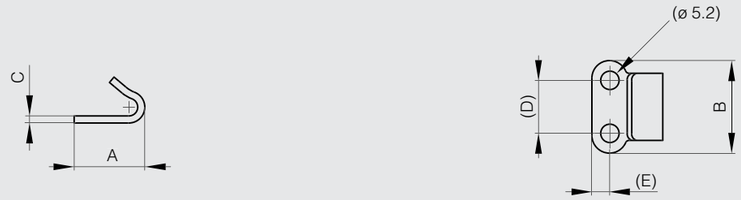

Padlockable toggle latches - 97.6 mm

This latch is used with strike part numbers 16-7-3881 and 16-7-3885.

STAINLESS STEEL STEEL RoHS

Part number	Material	Finish	A	B	C	Weight (g)
16-7-3883	steel	zinc plated	97.6	33	23.1	68
16-7-3884	304 stainless steel	raw	97.5	33	23.1	68

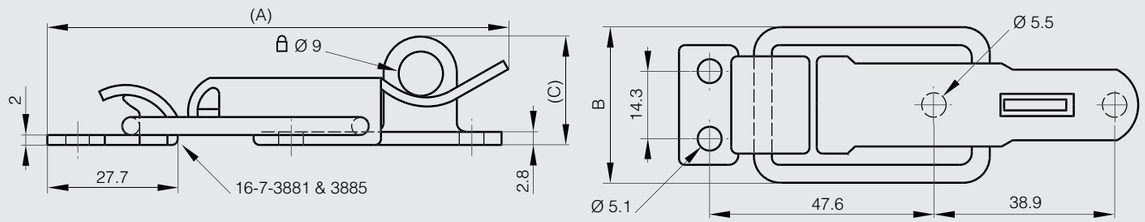

Strikes for part numbers 16-7-3883 and 16-7-3884

STAINLESS STEEL STEEL RoHS

Part number	Material	Finish	Weight (g)
16-7-3881	steel	zinc plated	9
16-7-3885	304 stainless steel	raw	9

Padlockable toggle latch - 122 mm

This latch is used with strike part number 16-7-3551.

STEEL RoHS

Part number	Material	Finish	A	B	C	Weight (g)
16-7-3664	steel	zinc plated	122	45	32.5	176

*Non-padlockable on request - MOQ 20 pcs
*INOX version on request - MOQ 20 pcs

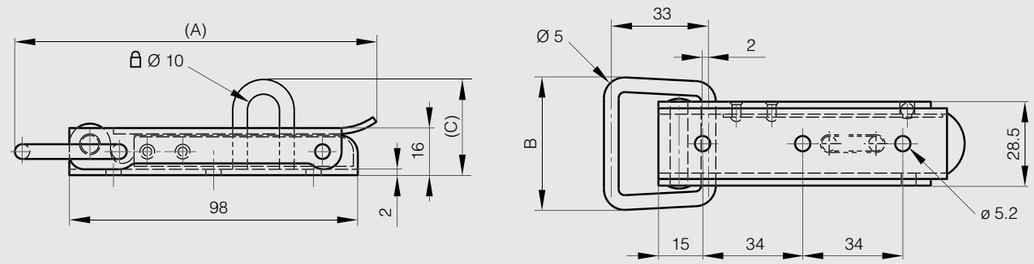

Strike for part number 16-7-3664

STEEL RoHS

Part number	Material	Finish	A	B	Weight (g)
16-7-3551	steel	zinc plated	28	25	24

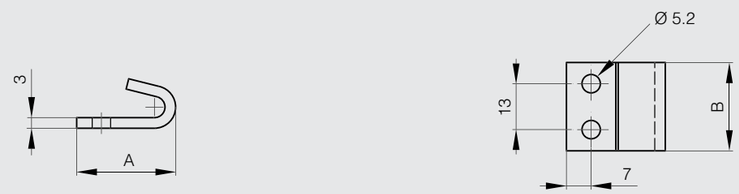

Spring loaded and padlockable toggle latches - 52 mm

STAINLESS STEEL | STEEL | RoHS

Dimension A (52 mm) without tension. Dimension A can be extended up to 3 mm putting the latch under tension.
These latches are used with strike part numbers 16-7-3739, 16-7-3741 and 16-7-3742.

Part number	Material	Finish	A	B	C	Weight (g)
16-7-3759	steel	zinc plated	55.5	34.5	12	32
16-7-3760	304 stainless steel	raw	55.5	34.5	12	32

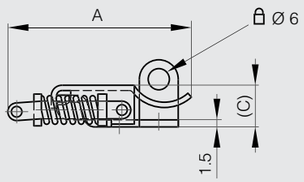

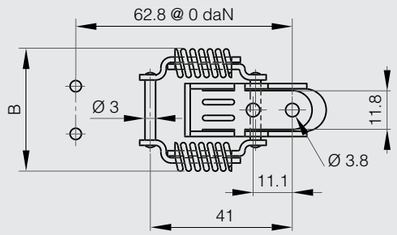

Strikes for part numbers 16-7-3759 and 16-7-3760

STAINLESS STEEL | STEEL | RoHS

Part number	Material	Finish	A	B	Note	Weight (g)
16-7-3741	steel	zinc plated	28.5	20.5	drilled	3.5
16-7-3739	304 stainless steel	raw	28.5	20.5	undrilled	3.5
16-7-3742	304 stainless steel	raw	28.5	20.5	drilled	3.5

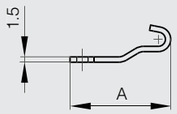

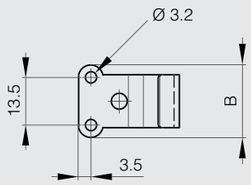

Spring loaded and padlockable toggle latches - 74 mm

STAINLESS STEEL | STEEL | RoHS

Dimension A (74 mm) without tension. Dimension A can be extended up to 4 mm putting the latch under tension.
This latch is used with strike part numbers 16-7-3751, 16-7-3753 and 16-7-3754.

Part number	Material	Finish	A	B	C	Note	Weight (g)
16-7-3765	steel	zinc plated	74	46.5	15		75
16-7-3766	304 stainless steel	raw	74	46.5	15	drilled	75

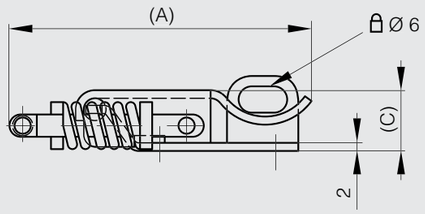

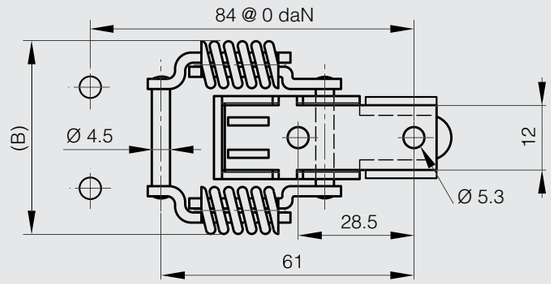

Strikes for part numbers 16-7-3765 and 16-7-3766

STAINLESS STEEL | STEEL | RoHS

Part number	Material	Finish	A	B	Note	Weight (g)
16-7-3753	steel	zinc plated	36	40	drilled	20
16-7-3751	304 stainless steel	raw	36	40	undrilled	20
16-7-3754	304 stainless steel	raw	36	40	drilled	20

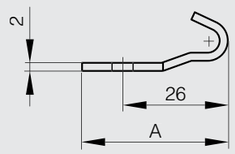

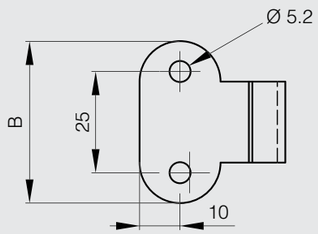

Spring loaded and padlockable toggle latch - 70.9 mm

This latch is used with strike part number 16-7-3916.

Part number	Material	Finish	A	B	C	Weight (g)
16-7-3917	304 stainless steel	raw	70.9	28.7	23.1	50

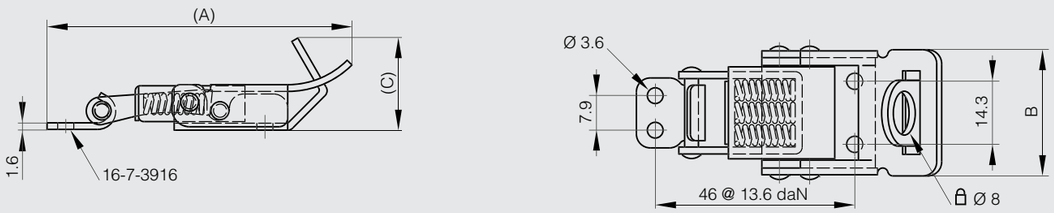

Strike for part number 16-7-3917

Part number	Material	Finish	Weight (g)
16-7-3916	304 stainless steel	raw	4.5

Adjustable toggle latches - padlockable - 70.6 mm

This latch is used with strike part numbers 16-7-3939 and 16-7-3940.

Part number	Material	Finish	A	B	C	Weight (g)
16-7-3938	304 stainless steel	raw	70.6	28.2	16	50

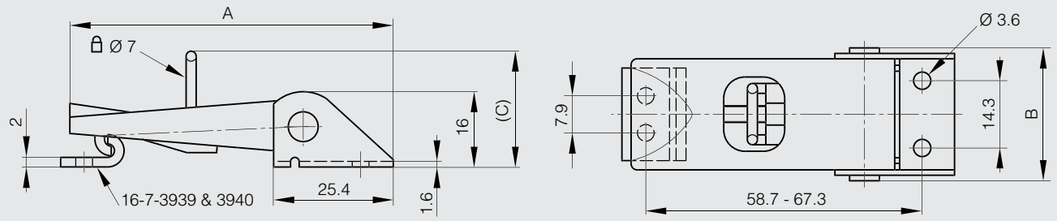

Strikes for part number 16-7-3938

Strikes for part numbers 16-7-3938.

Part number	Material	Finish	Weight (g)
16-7-3939	steel	zinc plated	4.5
16-7-3940	304 stainless steel	raw	4.5

Adjustable toggle latches with strike - padlockable - 82 mm to 118 mm

STAINLESS STEEL STEEL RoHS

Part number	Material	Finish	A	B	C	C1	C2	D	E	F	G	H	J	K	L	S	Note	Weight (g)
16-7-4018	steel	zinc plated	82	27	19	2	2	4	14	4.5	10	62-72	22	11	14	4	82<A<92	48
16-7-4020	steel	zinc plated	108	34	17	2.5	3	5	17	6	10	85-96	27	16	18	5.2	108<A<119	102
16-7-4021	steel	zinc plated	118	39	22	3	2.5	6	20	6	18	85-96	33	15	20	5.2	118<A<129	124
16-7-4025	304 stainless steel	raw	82	27	19	2	2	4	14	4.5	10	62-72	22	11	14	4	82<A<92	48
16-7-4027	304 stainless steel	raw	108	34	17	2.5	3	5	17	6.5	10	85-96	27	16	18	5.2	108<A<119	102
16-7-4028	304 stainless steel	raw	118	39	22	3	2.5	6	20	6.5	18	85-96	33	15	20	5.2	118<A<129	124

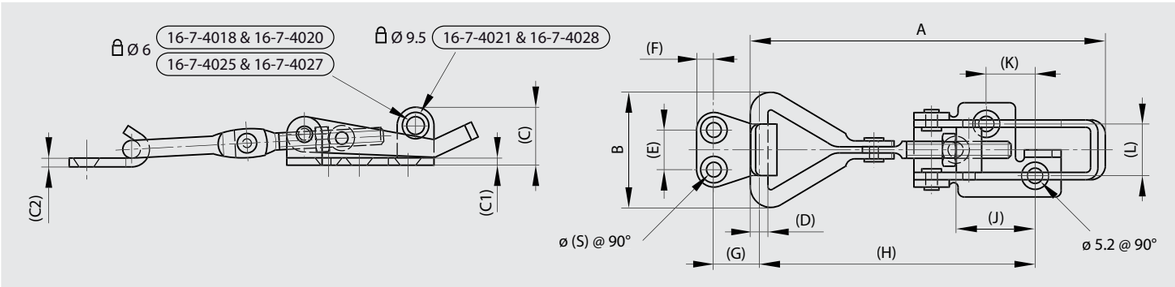

Adjustable toggle latches with strike - padlockable - 174 mm

STAINLESS STEEL STEEL RoHS

Part number	Material	Finish	A	B	C	Note	Weight (g)
16-7-4023	steel	zinc plated	174	50	27	174<A<186	236
16-7-4030	304 stainless steel	raw	174	50	27	174<A<186	236

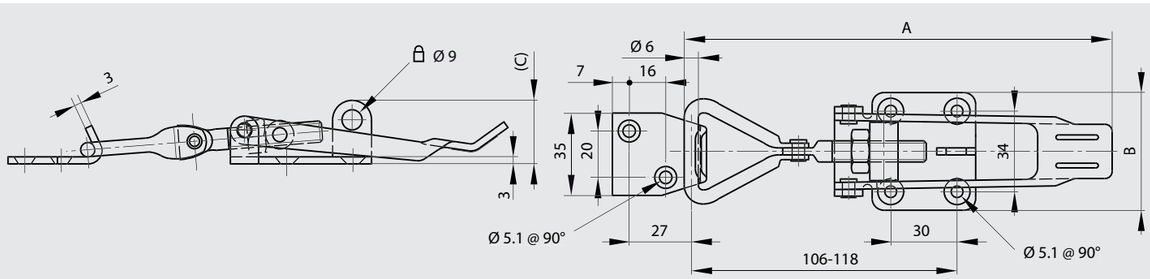

Spring loaded toggle latch without strike 35.8 mm

STAINLESS STEEL RoHS

This small latch is used with strike part number 16-7-3907.

Part number	Material	Finish	A	B	C	Weight (g)
16-7-3906	304 stainless steel	raw	35.8	12.3	7.9	9

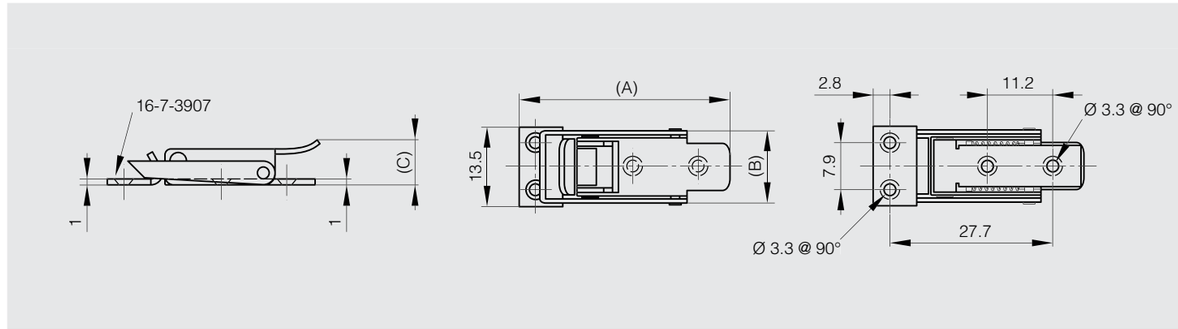

Strike for part number 16-7-3906

STAINLESS STEEL RoHS

Part number	Material	Finish	Weight (g)
16-7-3907	304 stainless steel	raw	4.5

Spring loaded toggle latches without strike - 70.8 mm

These latches are used with strike part numbers 16-7-3915 and 16-7-3916.

Part number	Material	Finish	A	B	C	Note	Weight (g)
16-7-3910	steel	zinc plated	70.8	28.7	10.2		50
16-7-3911	304 stainless steel	raw	70.8	28.7	10.2		50
16-7-3920	304 stainless steel	raw	70.8	28.7	10.2	with seal wire hole	50

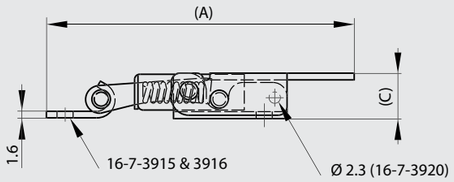

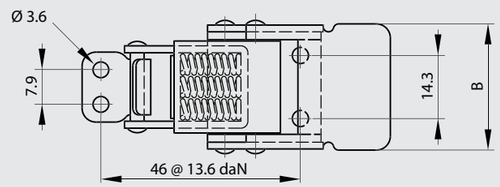

Spring loaded toggle latch without strike - with push button

The push button prevents accidental opening.
This latch is used with strike part number 16-7-3916.
A padlockable option is available for part number 16-7-3917.

Part number	Material	Finish	A	B	C	Note	Weight (g)
16-7-3918	304 stainless steel	raw	70.9	28.7	14.7	with push button to open / no seal wire hole	50

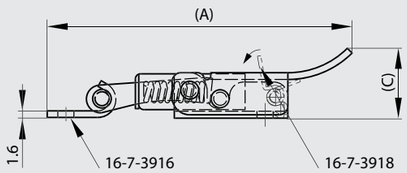

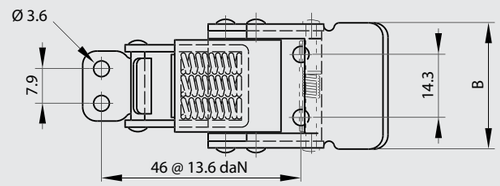

Strikes for part numbers 16-7-3910, 16-7-3911, 16-7-3918 and 16-7-3920

Part number	Material	Finish	Weight (g)
16-7-3915	steel	zinc plated	4.5
16-7-3916	304 stainless steel	raw	4.5

Spring loaded toggle latches without strike - 52 mm

These latches are used with strike part numbers 16-7-3739, 16-7-3741 and 16-7-3742.
Padlockable options are available for part numbers 16-7-3759 and 16-7-3760.

Part number	Material	Finish	A	B	C	Weight (g)
16-7-3735	steel	zinc plated	52	34.5	11.8	27
16-7-3736	304 stainless steel	raw	55.5	34.5	12	27

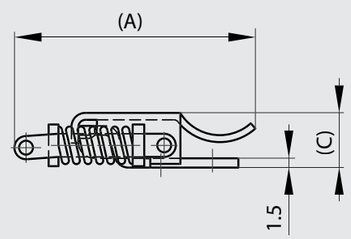

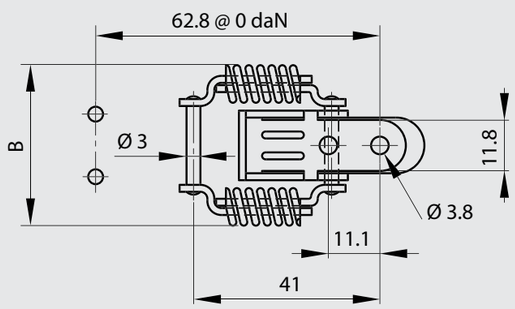

Strikes for part numbers 16-7-3735 and 16-7-3736

Part number	Material	Finish	A	B	Note	Weight (g)
16-7-3741	steel	zinc plated	28.5	20.5	drilled	3.5
16-7-3739	304 stainless steel	raw	28.5	20.5	undrilled	3.5
16-7-3742	304 stainless steel	raw	28.5	20.5	drilled	3.5

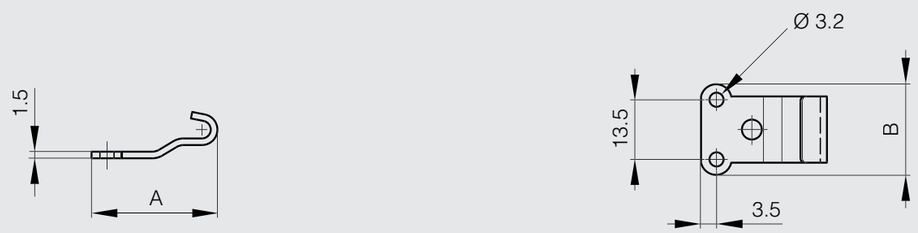

Spring loaded toggle latches without strike - 74 mm

STAINLESS STEEL STEEL RoHS

Dimension A (74 mm) without tension. Dimension A can be extended up to 4 mm putting the latch under tension.
These latches are used with strike part numbers 16-7-3751, 16-7-3753 and 16-7-3754.
Padlockable options are available for part numbers 16-7-3765 and 16-7-3766.

Part number	Material	Finish	A	B	C	Note	Weight (g)
16-7-3747	steel	zinc plated	74	46.5	15	drilled	70
16-7-3745	304 stainless steel	raw	74	47	15	undrilled	70
16-7-3748	304 stainless steel	raw	74	47	15	drilled	70

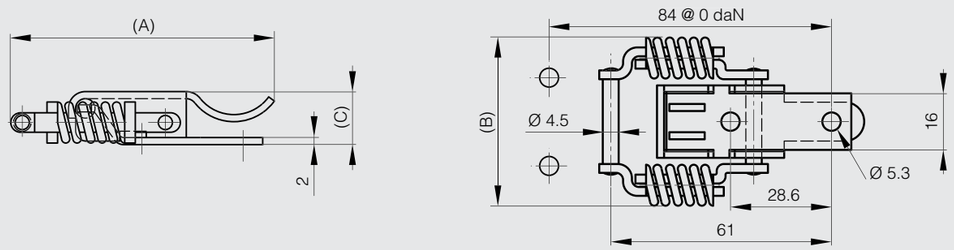

Strikes for part numbers 16-7-3745, 16-7-3747 and 16-7-3748

STAINLESS STEEL STEEL RoHS

Part number	Material	Finish	A	B	Note	Weight (g)
16-7-3753	steel	zinc plated	36	40	drilled	20
16-7-3751	304 stainless steel	raw	36	40	undrilled	20
16-7-3754	304 stainless steel	raw	36	40	drilled	20

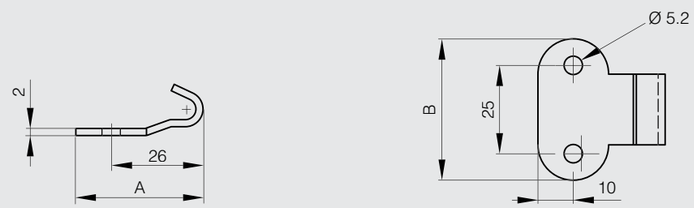

Spring loaded toggle latches without strike - 108 mm

STEEL

This latch is used with strike part numbers 16-7-3406, 16-1-4038 and 16-7-3870.

Part number	Material	Finish	A	B	C	Weight (g)
16-7-3400	steel	raw	108	49.5	19.5	118
16-7-3402	steel	zinc plated	108	49.5	19.5	118

*Padlockable on request - MOQ 20 pcs

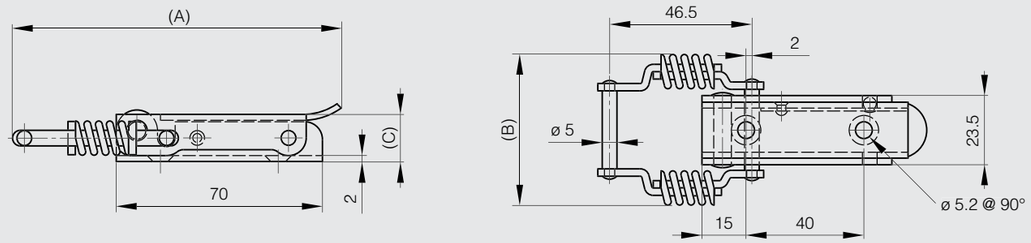

Spring loaded toggle latches without strike - 140 mm

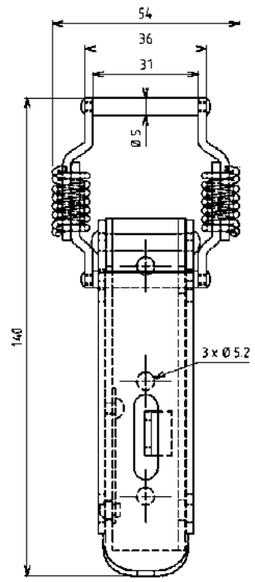

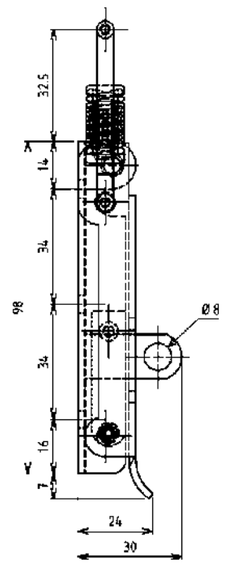

	Without padlock-facility	With padlock-facility
Zinc plated steel DS plus Top Coat drilled	6004-U27-JQ	6004-U34-JQ

Strikes for part numbers 16-7-3400, 16-7-3402, 6004-U27-JQ, 6004-U34-JQ

STEEL

Part number	Material	Finish	A	B	S	Weight (g)
16-7-3406	steel	zinc plated	85	25	5	57

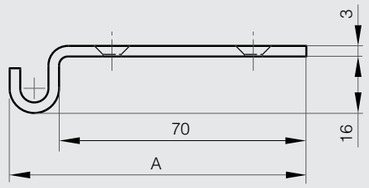

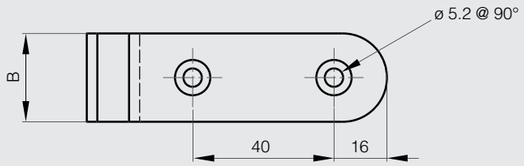

Other strikes for part numbers 16-7-3400, 16-7-3402, 6004-U27-JQ, 6004-U34-JQ

STEEL RoHS

Part number 16-7-3551 may also be used as an alternative strike.

Part number	Material	Finish	A	B	C	F	G	S	Weight (g)
16-1-4038	steel	zinc plated	63	25	3	8.8	26	4.5	42
16-7-3870	steel	zinc plated	63.5	20	2	7.9	19	5.4	24

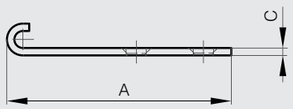

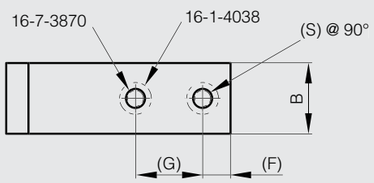

Adjustable toggle latches with secondary lock and strike

STAINLESS STEEL STEEL RoHS

Part number	Material	Finish	A	B	C	Weight (g)
16-1-9022	steel	zinc plated	70	27.5	13.5	77
16-1-9021	stainless steel	electropolished	70	27.5	13.5	77

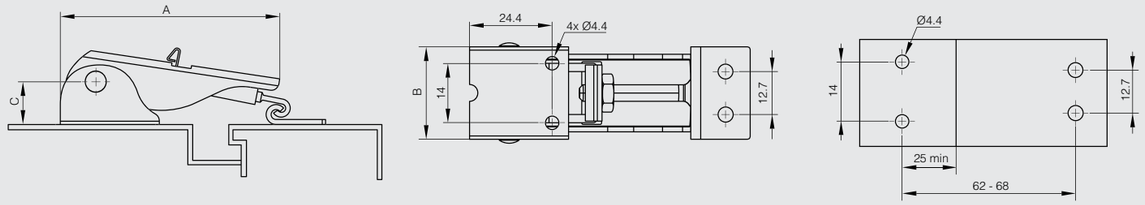

Adjustable toggle latch with strike - 60 mm

STEEL RoHS

Dimension A is adjustable from 60 mm to 65 mm.

Part number	Material	Finish	A	B	C	Note	Weight (g)
16-7-3839	steel	zinc plated	60	22	10	60<A<65	36

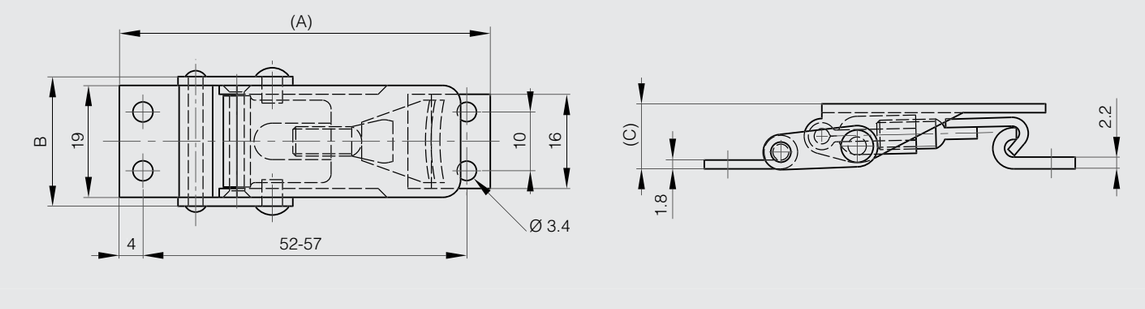

Adjustable toggle latches without strike 70.6 mm

STAINLESS STEEL STEEL

These latches are used with strike part numbers 16-7-3939 and 16-7-3940.
Part number 16-7-3934 has a lockable nut.

Part number	Material	Finish	A	B	C	Weight (g)
16-7-3932	steel	zinc plated	70.6	28.2	16	50
16-7-3934	steel	zinc plated	70.6	28.2	16	50
16-7-3933	304 stainless steel	raw	70.6	28.2	16	50

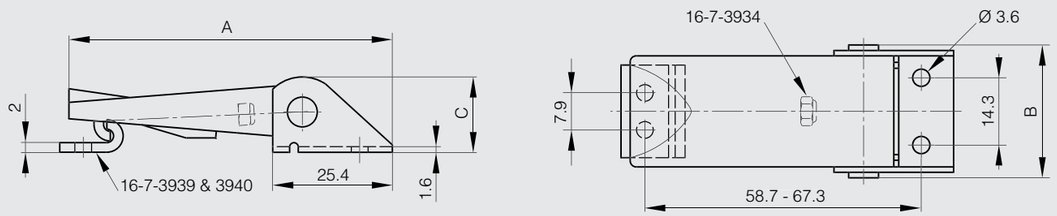

Strikes for part numbers 16-7-3932, 16-7-3933 and 16-7-3934

STAINLESS STEEL STEEL

Part number	Material	Finish	Weight (g)
16-7-3939	steel	zinc plated	4.5
16-7-3940	304 stainless steel	raw	4.5

Adjustable toggle latches with strike 82 mm and 103 mm long

STAINLESS STEEL STEEL RoHS

Part number	Material	Finish	A	B	C	C1	C2	D	E	F	G	H	J	S	Note	Weight (g)
16-7-4017	steel	zinc plated	82	28	14	2	2	4	14	5	10	52-59	18	4	82<A<89	46
16-7-4019	steel	zinc plated	103	34	16	2.5	3	5	17	6.5	10	68-86	17	5.2	103<A<121	90
16-7-4024	304 stainless steel	raw	82	28	14	2	2	4	14	5	10	52-59	18	4	82<A<89	46
16-7-4026	304 stainless steel	raw	103	34	16	2.5	3	5	17	6.5	10	68-86	17	5.2	103<A<121	90

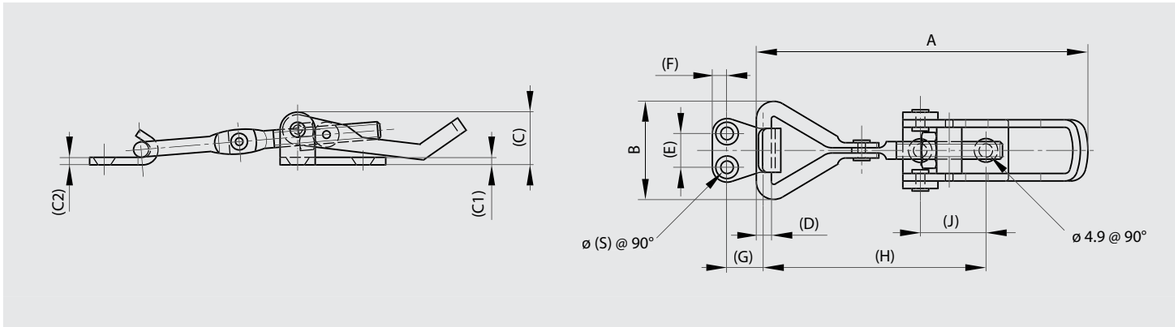

Adjustable toggle latches with strike 118 mm

STAINLESS STEEL STEEL RoHS

Part number	Material	Finish	A	B	C	Note	Weight (g)
16-7-4022	steel	zinc plated	118	40	18	118<A<128	130
16-7-4029	304 stainless steel	raw	118	40	18	118<A<128	130

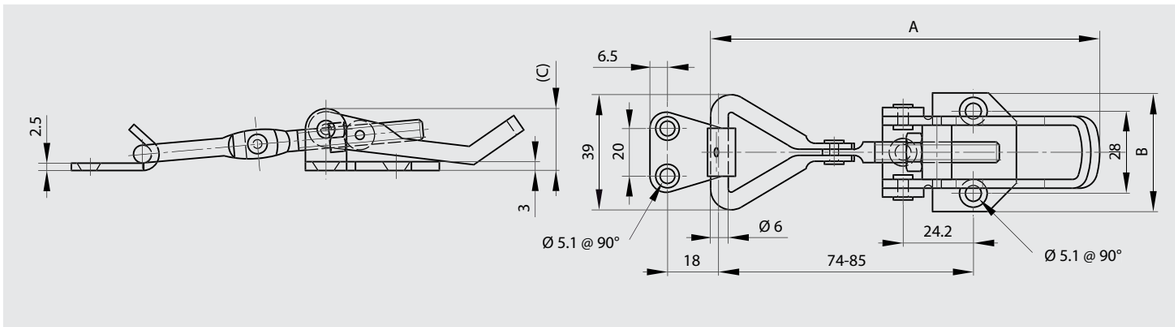

Adjustable toggle latch without strike - 119.1 mm

STEEL

Dimension A is adjustable from 119.1 mm to 133.6 mm.
Aluminium mounting plate.
This latch is used with strike part number 16-7-3944.

Part number	Material	Finish	A	B	C	Note	Weight (g)
16-7-3941	steel	zinc plated	119.1	76.2	25.9	119.1<A<133.6	150

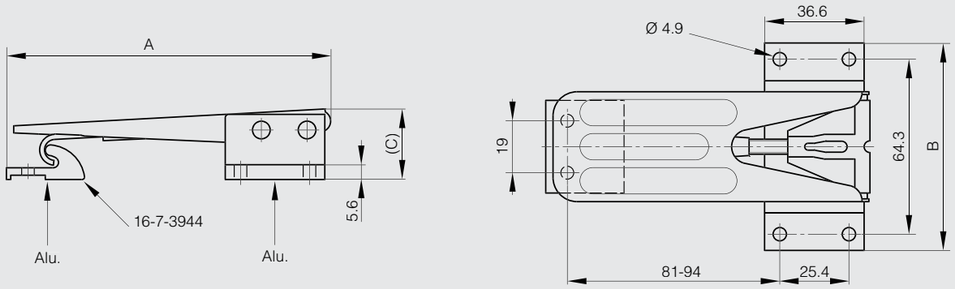

Strike for part number 16-7-3941

ALU RoHS

Part number	Material	Finish	Weight (g)
16-7-3944	aluminium	raw	9

Adjustable toggle latches with strike 88 mm

STAINLESS STEEL STEEL RoHS

Part number	Material	Finish	A	B	C	Weight (g)
16-7-3843	steel	zinc plated	88	48.5	26	174
16-7-3844	304 stainless steel	raw	88	48.5	26	174

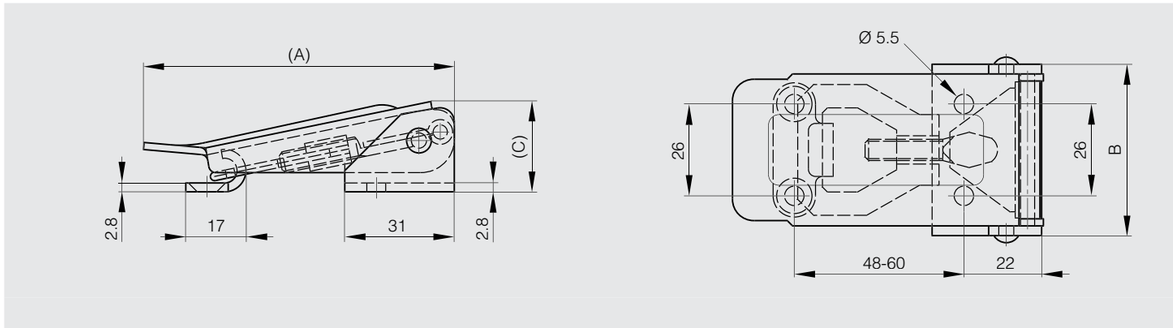

Adjustable toggle latch with strike - 135 mm

STEEL RoHS

Dimension A is adjustable from 135 mm to 150 mm.

Part number	Material	Finish	A	B	C	Note	Weight (g)
16-7-3842	steel	zinc plated	135	45.5	23	135<A<150	170

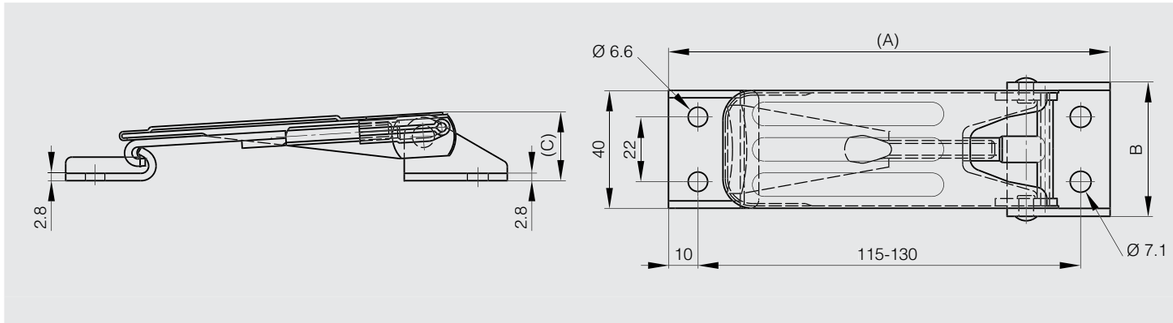

Adjustable toggle latches with strike 138 mm

STAINLESS STEEL STEEL RoHS

Dimension A is adjustable from 138 mm to 150 mm.

Part number	Material	Finish	A	B	C	Note	Weight (g)
16-7-3840	steel	zinc plated	138	52	18	138<A<150	100
16-7-3841	304 stainless steel	raw	138	52	18	138<A<150	100

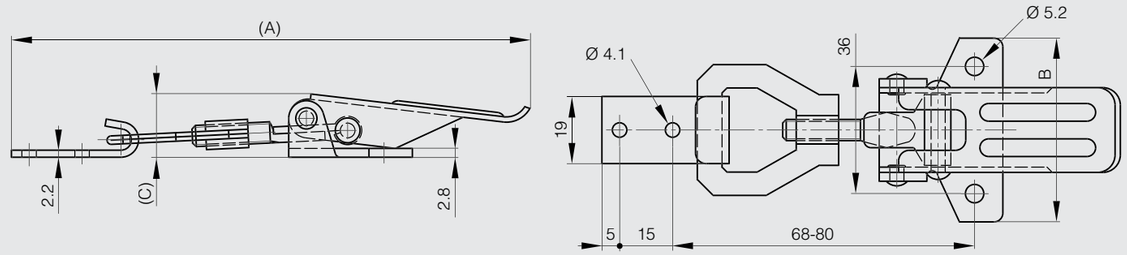

Adjustable toggle latches with secondary lock without strike

STAINLESS STEEL RoHS

Dimension A is adjustable from 115 mm to 122 mm.

Part number	Material	Finish	A	B	C	Note	Weight (g)
16-1-4231	304 stainless steel	raw	115	52	22	115<A<122	85

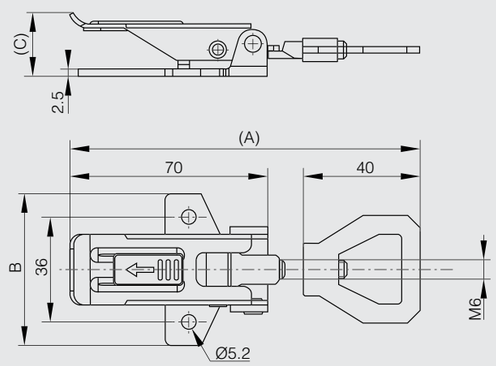

Strike for part number 16-1-4231

STAINLESS STEEL RoHS

Part number	Material	Finish	A	B	Weight (g)
16-1-4236	304 stainless steel	raw	67	57.9	35

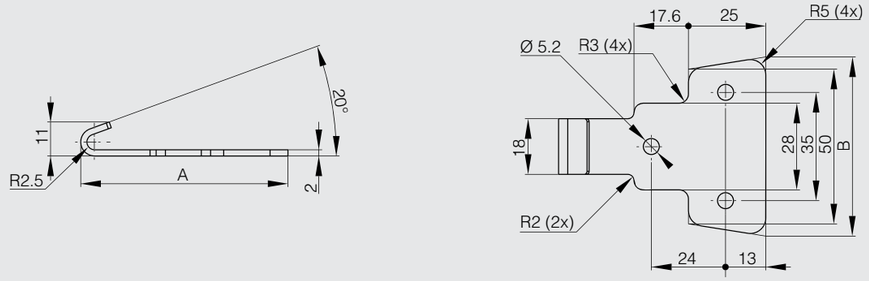

Other strikes for part number 16-1-4231

STAINLESS STEEL RoHS

Part number	Material	Finish	A	B	Note	Weight (g)
16-7-3751	304 stainless steel	raw	36	40	undrilled	20
16-7-3754	304 stainless steel	raw	36	40	drilled	20

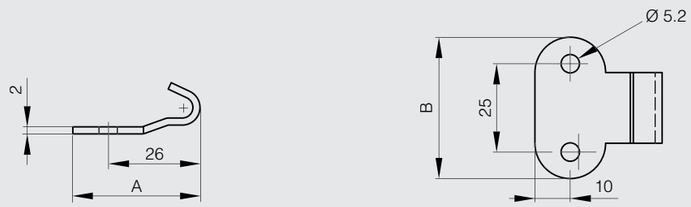

Toggle latch without strike 62.5 mm

STAINLESS STEEL RoHS

Part number	Material	Finish	A	B	C	Weight (g)
16-7-3900	304 stainless steel	raw	62.5	24.4	13.5	27

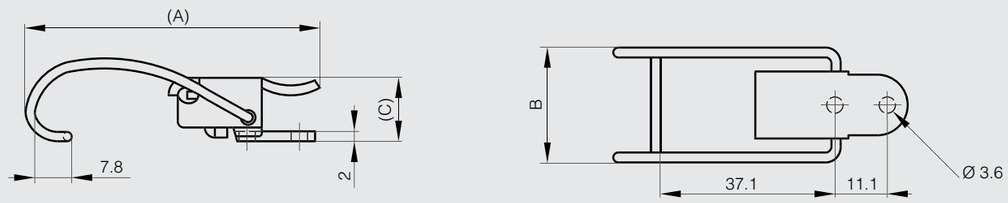

Toggle latch without strike - 63.6 mm

STEEL RoHS

Part number	Material	Finish	A	B	C	Weight (g)
16-7-3767	steel	black cataphoresis	63	22	11.8	20

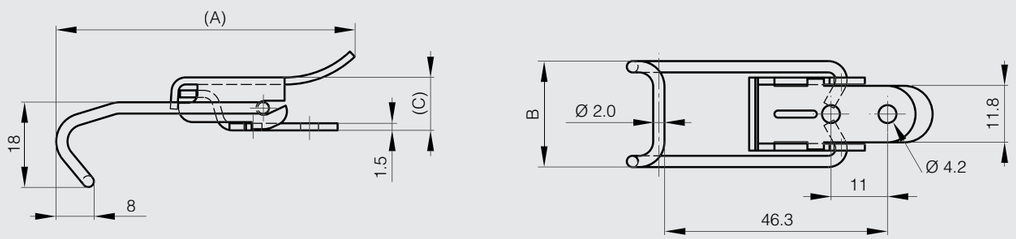

Toggle latches without strike - 64 mm

STAINLESS STEEL STEEL RoHS

Part number	Material	Finish	A	B	C	Weight (g)
16-7-3947	steel	zinc plated	64	28.7	14	45
16-7-3948	stainless steel	raw	64	28.7	14	45

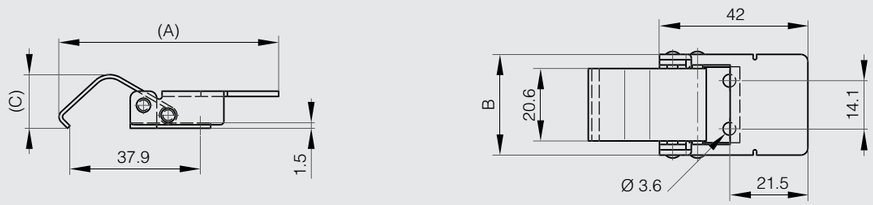

Toggle latches without strike - 67.6 mm

STAINLESS STEEL RoHS

Part number	Material	Finish	A	B	C	Weight (g)
16-7-3902	304 stainless steel	raw	67.6	25.4	13.7	32

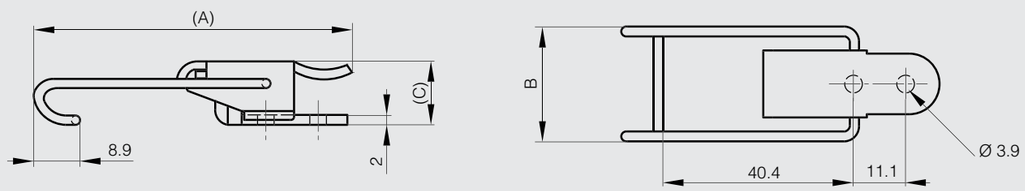

Toggle latch without strike - 93.2 mm

STAINLESS STEEL RoHS

Part number	Material	Finish	A	B	C	Weight (g)
16-7-3903	304 stainless steel	raw	93.2	25.4	13.7	32

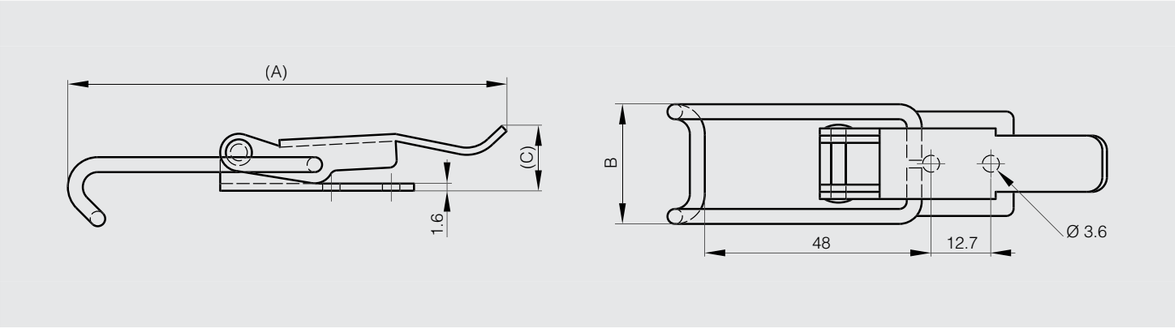

Toggle latch without strike - 106 mm

STEEL RoHS

Part number	Material	Finish	A	B	C	Weight (g)
16-7-3768	steel	black cataphoresis	106	47	19.5	42

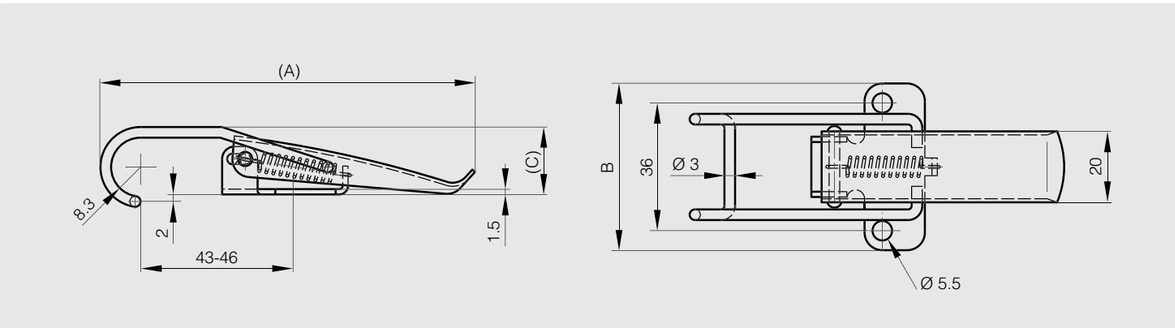

Hooked toogle latch without strike

NEW

STAINLESS STEEL RoHS

	Part number	Material	Finish	A	B	C	Note	Weight (g)
NEW	16-1-4261	304 stainless steel	raw	80	27	32.1	80<A<107	82

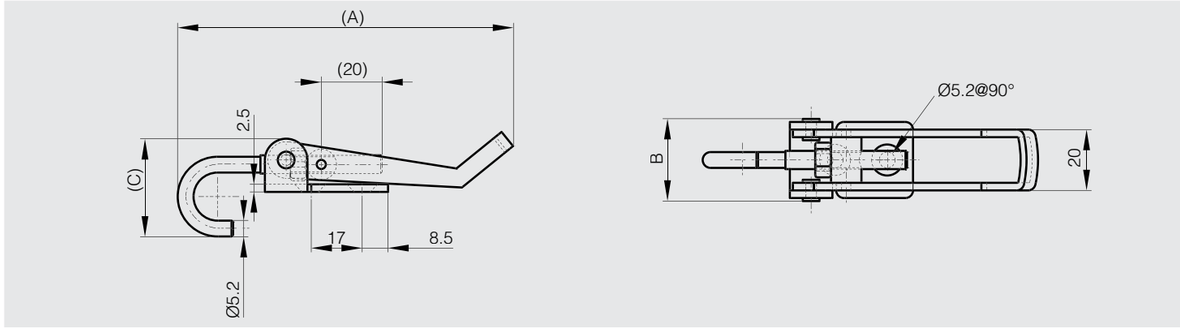

Alternative strike for toggle latches

STAINLESS STEEL RoHS

Part number	Material	Finish	A	B	Weight (g)
16-7-3872	304 stainless steel	raw	21.4	22.4	9

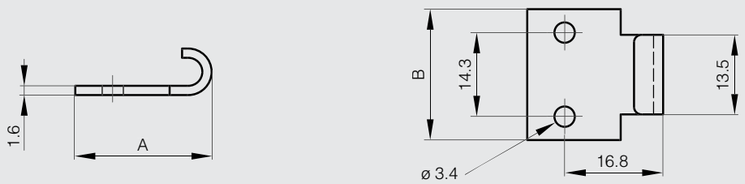

DIRAK

METALIKA COMPONENTS FOR INDUSTRY KACIN

Over Center Toggle Latch Stainless Steel

[7-320]

Advantages

- The versions 259-9101 and 259-9102 have an additional lock mechanism/release.
- The keepers are included.
- The surface of the latches is satin polished.

Materials

- **Over center toggle latch:** stainless steel AISI 304

RoHS WEEE

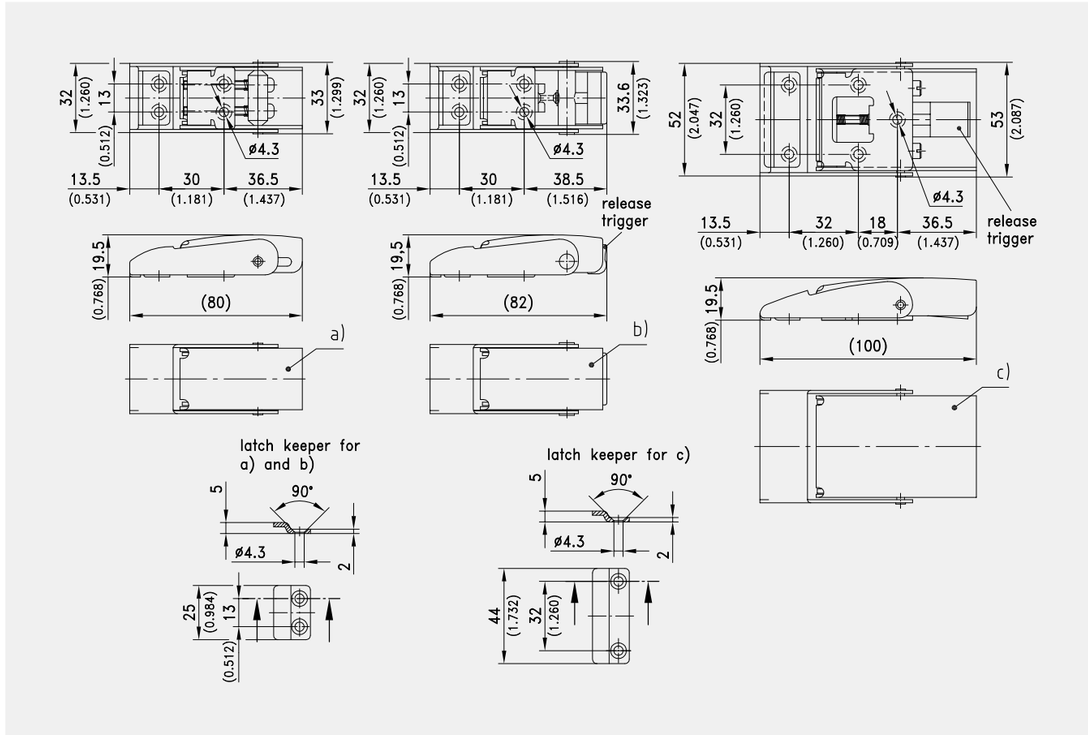

Over center toggle latch with keeper

	Part Number	Dimension	Push button release
a)	259-9001.00-00000	80x32x19,5	No
b)	259-9101.00-00000	82x32x19,5	Yes
c)	259-9102.00-00000	100x52x19,5	Yes

Over Center Toggle Latch Stainless Steel [7-321.01]

Advantages

- Secure tightening and locking of two components.
- Clicks into place securely.
- Slider for releasing.
- Vibration-proof.
- The catch is included in the scope of delivery.
- Version a) with recessed riffle.
- Version b) with raised riffle.

Materials

- **Toggle-Latch:** stainless steel AISI 304
- **Release slider:** stainless steel AISI 304 or ABS, red

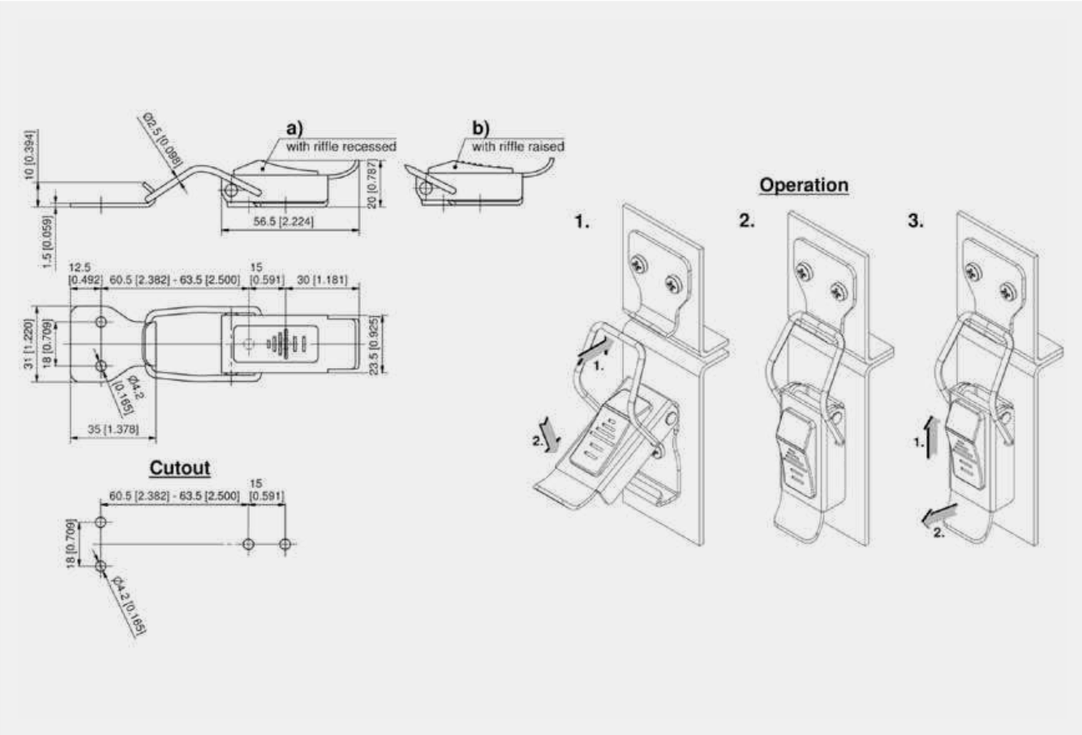

Over Center Toggle Latch

	Part Number	Version
a)	350-2080.00-00000	with stainless steel release slider
b)	350-2080.00-00001	with ABS release slider

Over Center Toggle Latch Stainless Steel [7-321.02]

Advantages

- Secure tightening and locking of two components.
- With eyelet for padlock.
- The catch is included in the scope of delivery.

Materials

- **Toggle-Latch:** stainless steel AISI 304

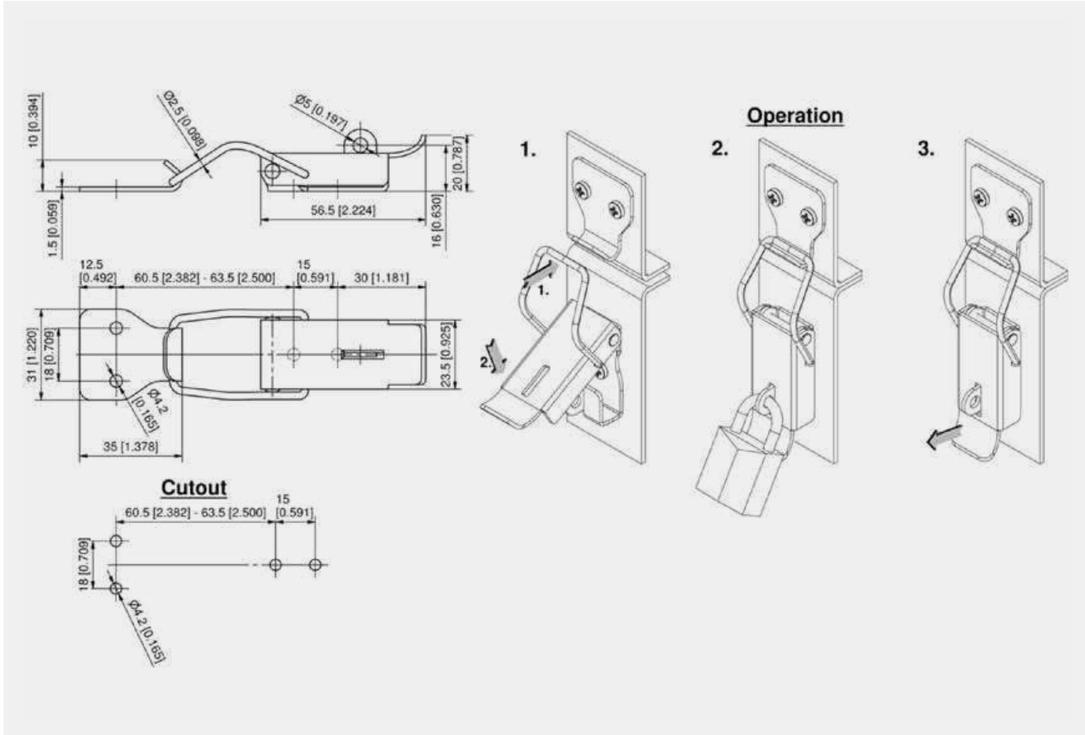

Over Center Toggle Latch

Part Number	Version
350-2080.00-00002	with eyelet for padlock

www.METALIKA-KACIN.com

ojop SWEDEN is well known in the industrial community for catches. Over the decades we have studied market demands and built up our products to the highest quality, service, and delivery demands.

Our business idea is to supply industrial companies with the highest quality catches possible. A component which enables quick mounting and dismantling of various elements. The strength and function of our catches is adapted to the demand for permanent installation.

Our objective with this new catalogue is to give the best possible technical information to the commercial and industrial trade, and particularly to the designers.

Today our product range includes three main groups of catches: the 700-series, the 900-series, and the 100-500 series.

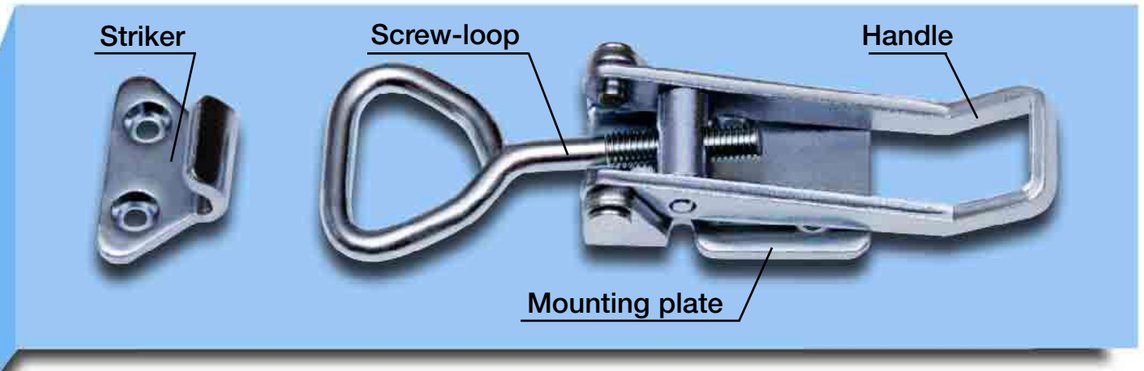

Our product program

700-series

Manufactured in pressed steel, ***Utility type,*** and the most popular catch. A strong and functional catch. **Pages 4 – 15**

900-series

Modern Swedish design, fully closed, technically interesting, with friction screw, one hand operation, space saving. **Pages 16 – 20**

100-500-series

The ideal catch ***for rugged environments.*** Shock resistant. Extra strength. Made of drop forged steel. ***Our speciality.*** **Pages 21 – 30**

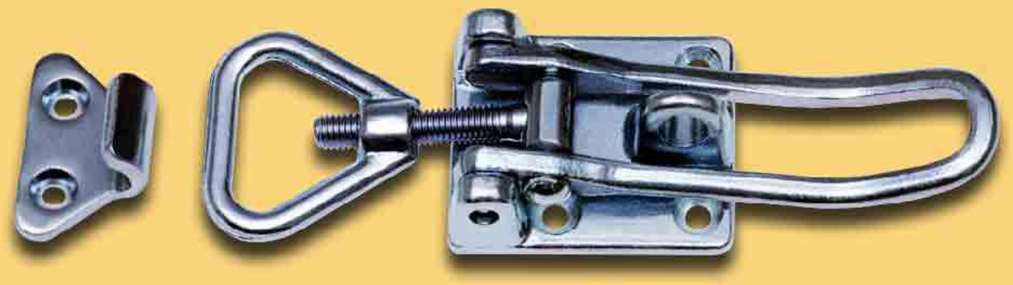

Standard material and surface finish

Due to the need for varying requirements we can offer special finishes such as yellow,- green,- or black- chromated, fasteners with bands, curved mounting-plates, extended fasteners etc...

When you order please state the following:

Raw finish without mounting holes is Code **A.** For example, **702 A** without mounting holes and no zinc-plating, is made for ***Welding***.

Zinc-plated and with mounting holes is Code **C.** For example, **702 C** with Zinc-plating and countersunk mounting holes.

We manufacture all components used in our products.

Down-load your **OJOP-SWEDEN** Auto–**CAD** directly from our home page www.ojopsweden.se

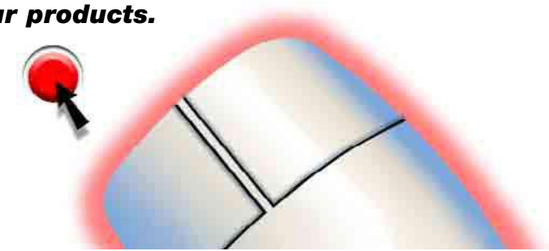

Series	Material	Zinc-plated 12 microns	Stainless AISI 316	Finish
700	Cold-rolled steel Hot-rolled steel	x	x	Electrolytic brightening
900	Cold-rolled steel	x	x	
100–500	Drop forged steel	x	400–500-catches	Electrolytic brightening

701

Strikers
15, 18 or 30

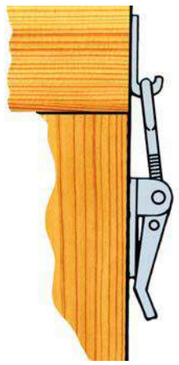

Strikers
14 or 50

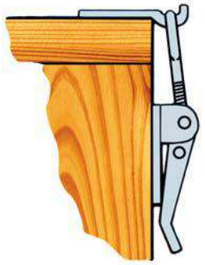

Striker
49

Strikers,
see pages: 31–36

Combinations		Capacity			Weight	
Catch	Striker	Recommended maximum load			Weight per 100 pcs.	
		Kp	N	Pounds	Kilos	Pounds
701 S/C	15, 30, 49, 50	100	981	220	3,6	7.9
701 TS/C	14, 18	200	1962	440	3,3	7.3
701 HS/C	–	100	981	220	3,2	7.0
701 L/C	15, 30, 49, 50	100	981	220	4,1	9.0
701 TL/C	14, 18	200	1962	440	3,8	8.4
701 HL/C	–	100	981	220	3,7	8.1

701 TS
L = 77–88 2.68”–3.46”

701 S
L = 77–88 3.03”–3.46”

701 HS
L = 75–90 2.95”–3.54”

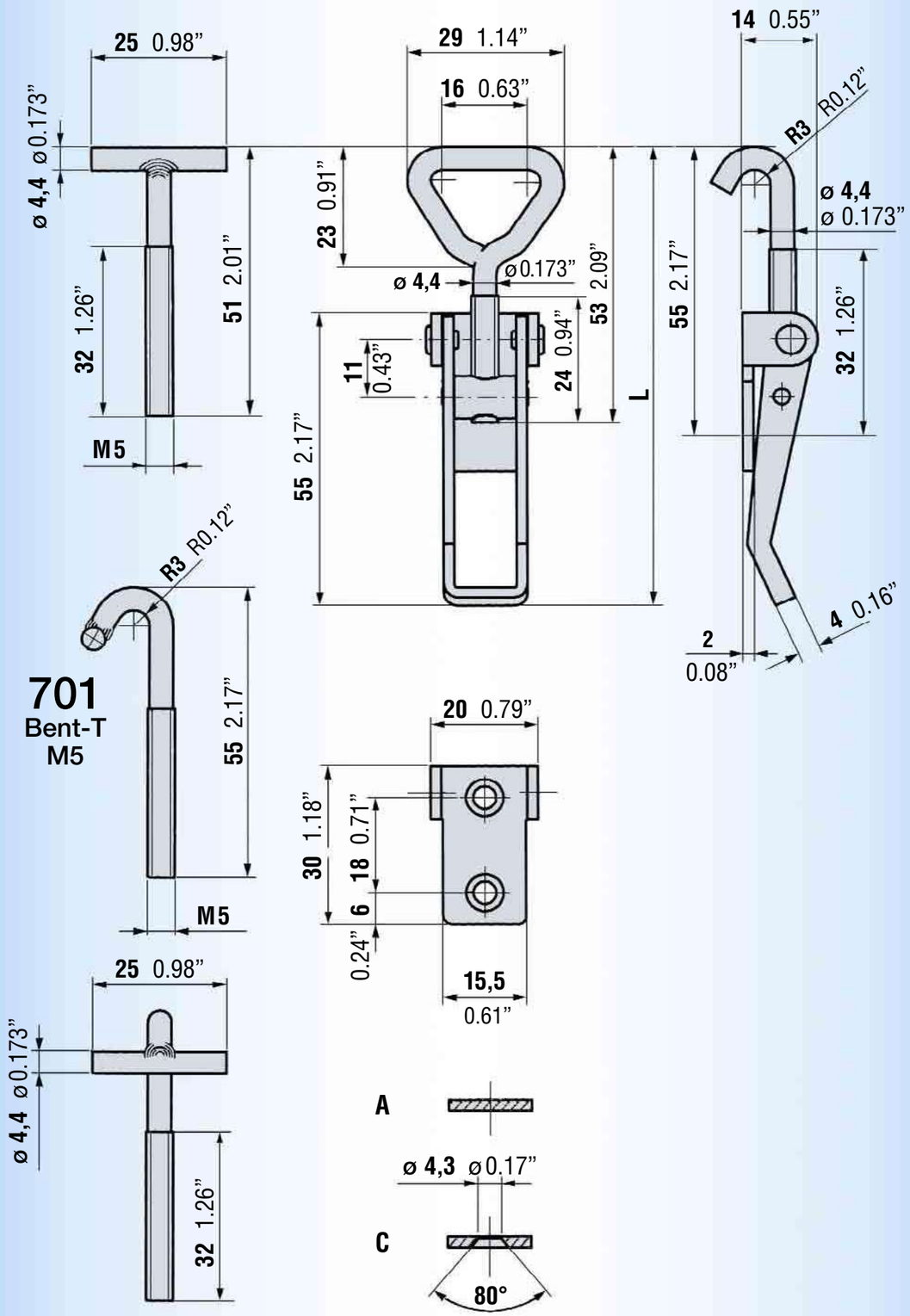

701 TL

L = 82–88 3.23”–3.46”

701 L

L = 82–88 3.23”–3.46”

701 HL

L = 84–90 3.31”–3.54”

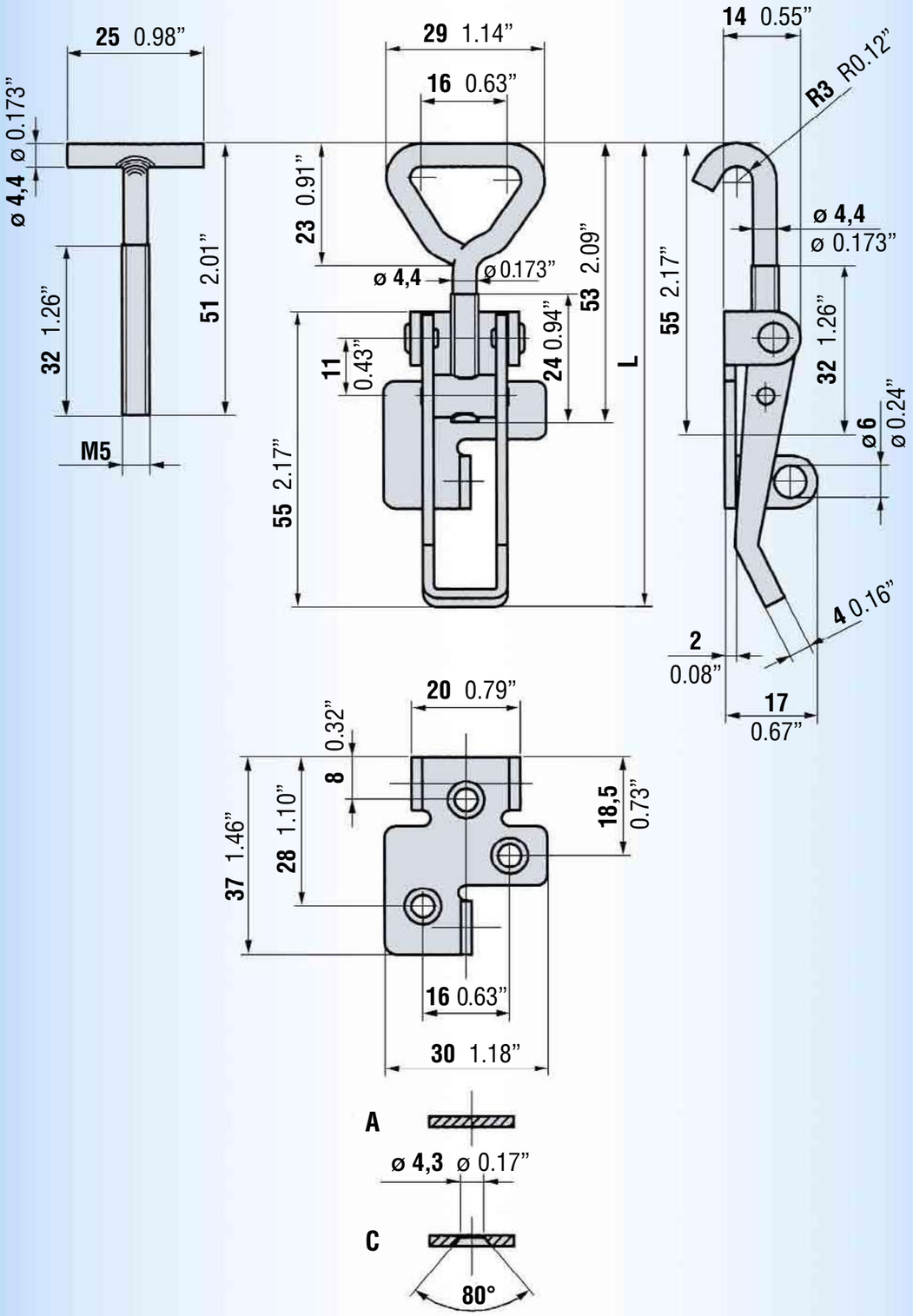

Innovations

41 C
Black chromate

704 L/C, Black chromate, with friction screw-loop and safety catch
Patent pending

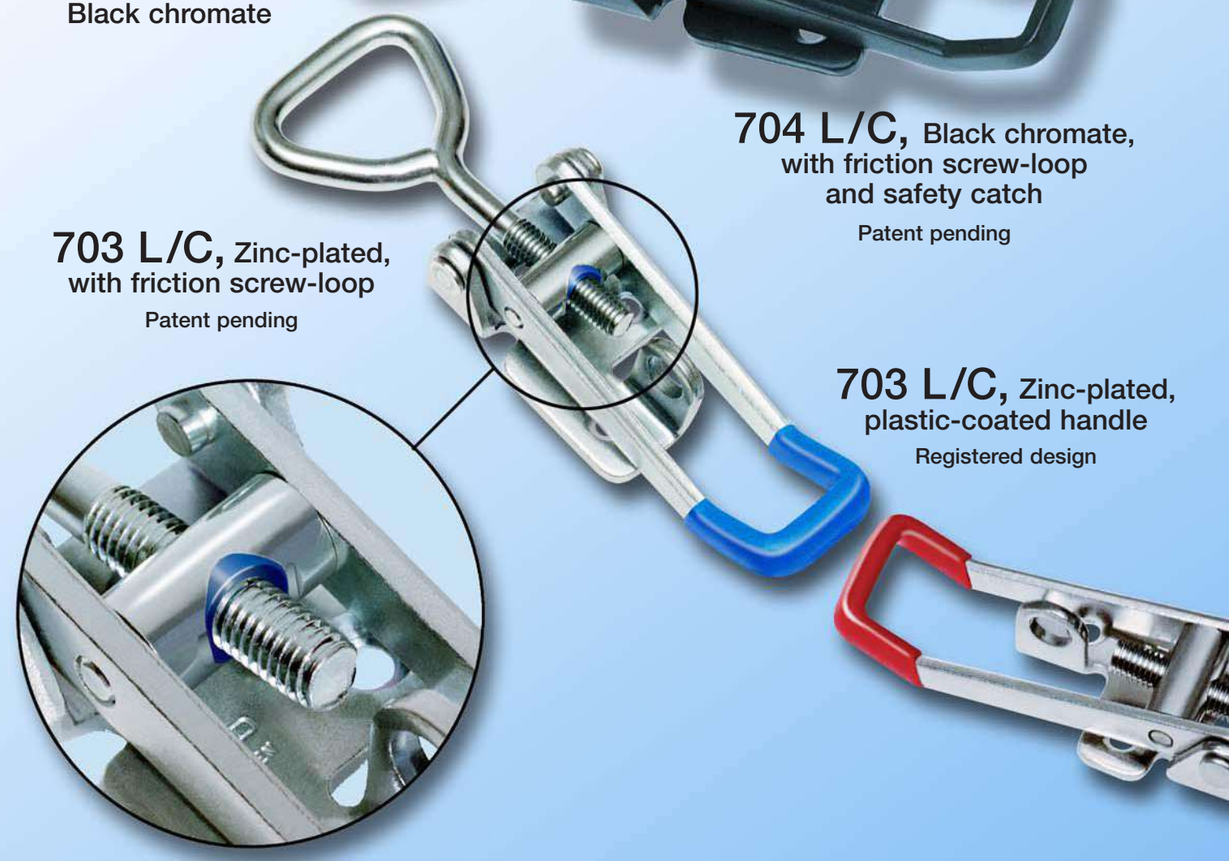

703 L/C, Zinc-plated, with friction screw-loop
Patent pending

703 L/C, Zinc-plated, plastic-coated handle
Registered design

Heavy Duty

804 TL/C
Registered design

Capacity:
1600 Kp
16000 N
3500 Pound

Weight: 1.05 kilo (Fastener + Striker)
Materials: Zinc-plated steel or brightened 316 stainless

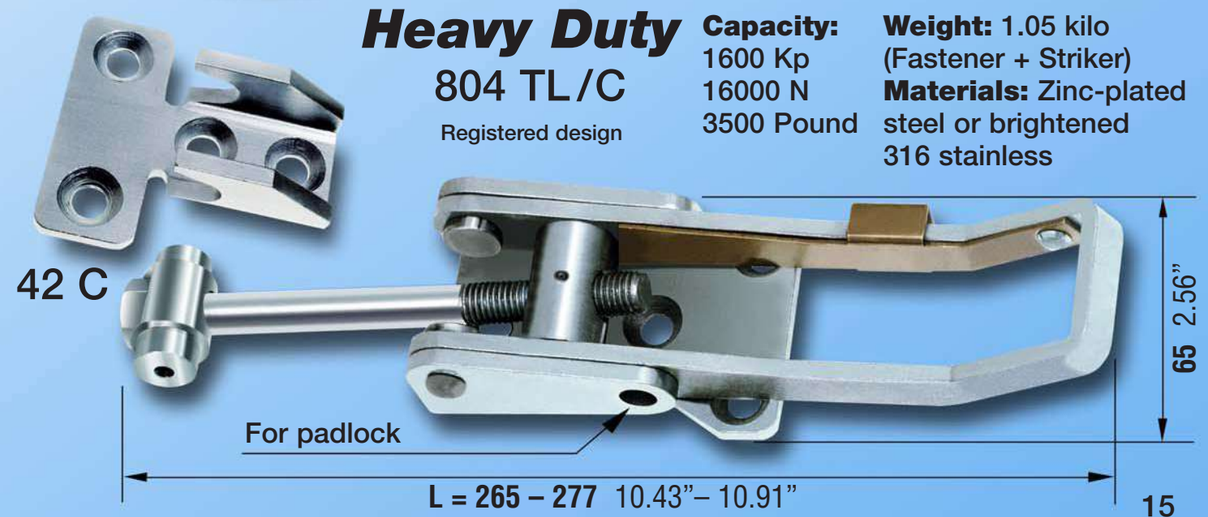

702

Strikers
19 or 31

Strikers
10 or 14

Strikers,
see pages: 31–36

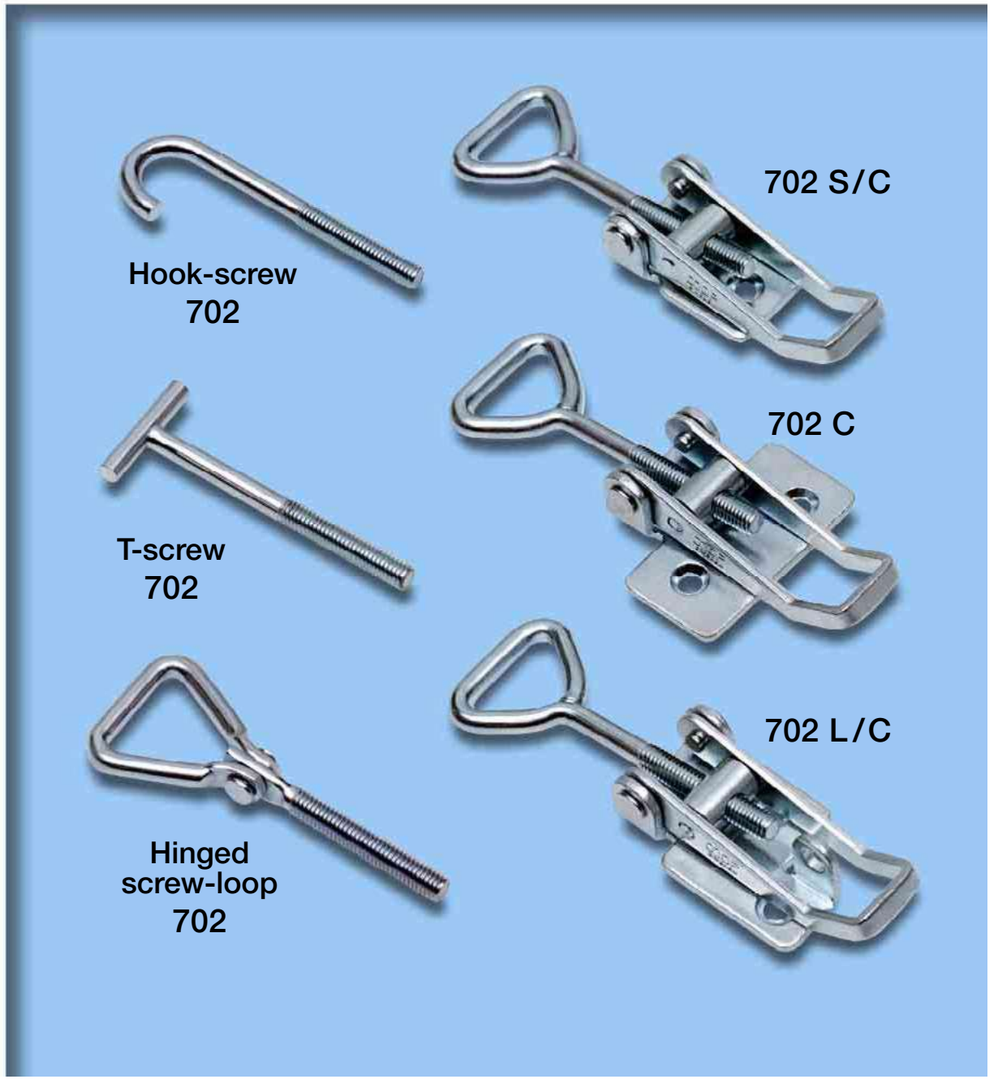

Combinations		Capacity			Weight	
Catch	Striker	Recommended maximum load			Weight per 100 pcs.	
		Kp	N	Pounds	Kilos	Pounds
702 S/C	10, 31	300	2943	660	7,2	15.9
702 TS/C	14, 19	400	3924	881	6,7	14.8
702 HS/C	–	100	981	220	6,6	14.5
702 S/C Hinged	10, 31	250	2452	550	7,5	16.5
702 L/C	10, 31	300	2943	660	8,0	17.6
702 TL/C	14, 19	400	3924	881	7,4	16.3
702 HL/C	–	100	981	220	7,3	16.1
702 L/C Hinged	10, 31	250	2452	550	8,3	18.3
702 C	10, 31	300	2943	660	8,4	18.5
702 T/C	14, 19	400	3924	881	7,8	17.2
702 H/C	–	100	981	220	7,7	17.0
702 C Hinged	10, 31	250	2452	550	8,6	18.9

702 TS

L = 94–112 3.46”–4.41”

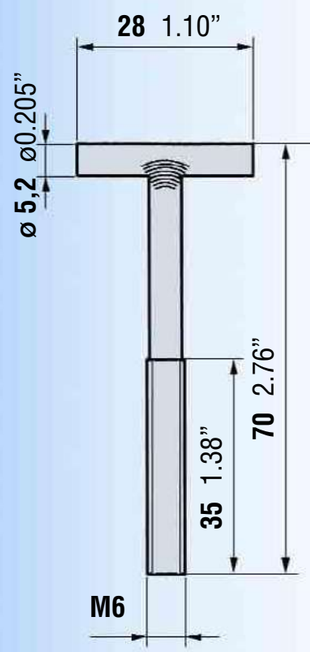

702 S

L = 98–122 3.86”–4.80”

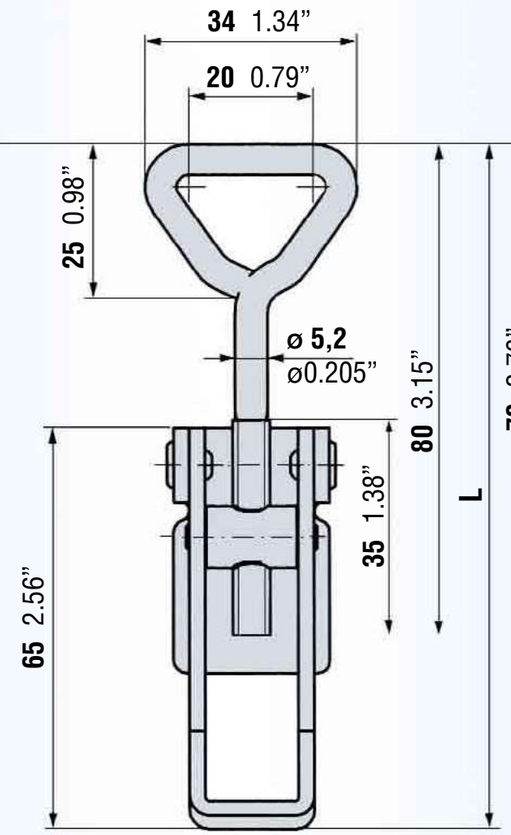

702 HS

L = 88–112 3.46”–4.41”

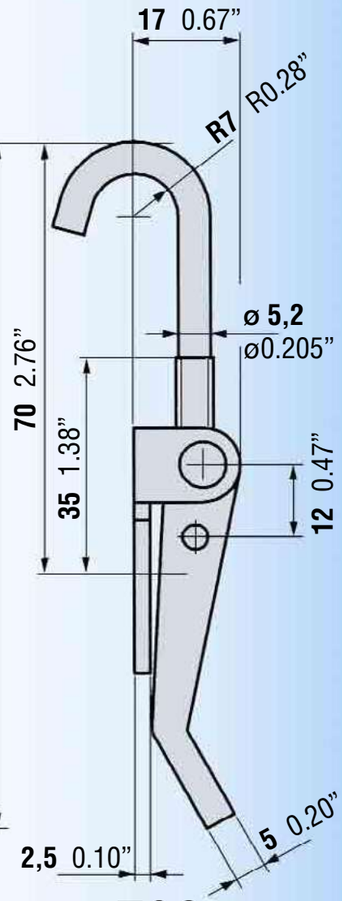

702 S

Hinged screw-loop

L = 98–122 3.86”– 4.80”

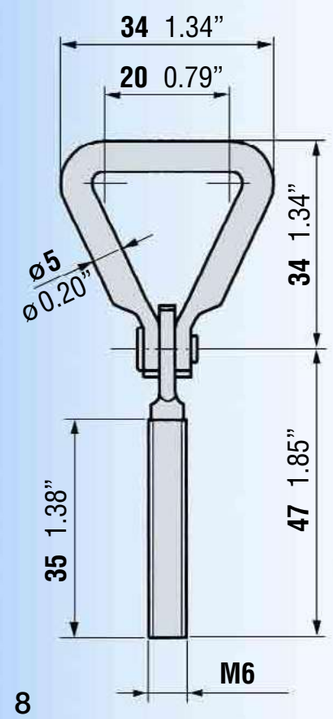

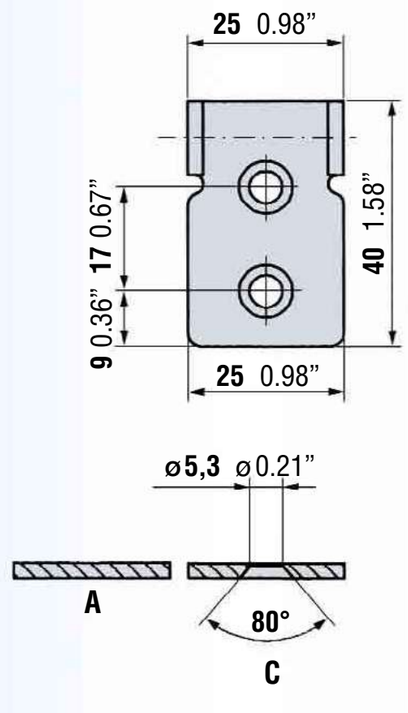

702

Bent-T M6

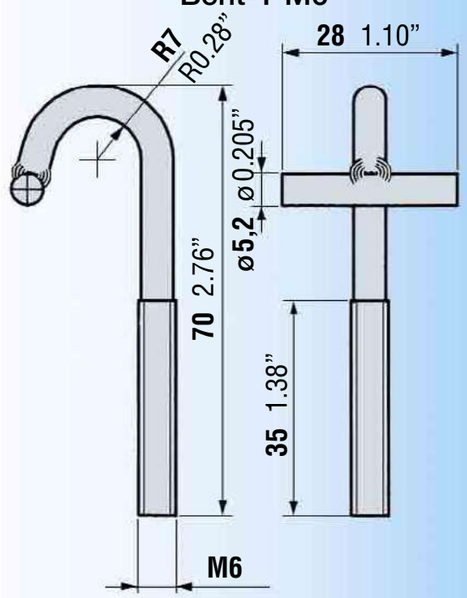

702 TL

L = 98 – 112 3.86”–4.41”

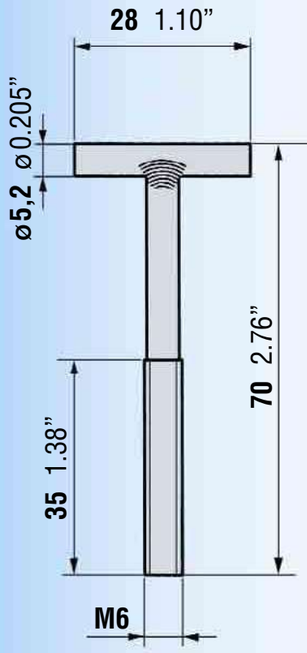

702 L

L = 107 – 122 4.21”–4.80”

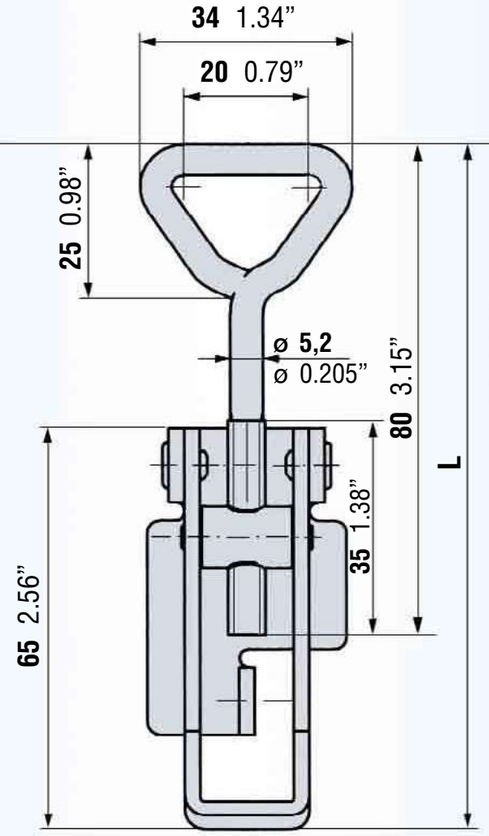

702 HL

L = 98 – 112 3.86”–4.41”

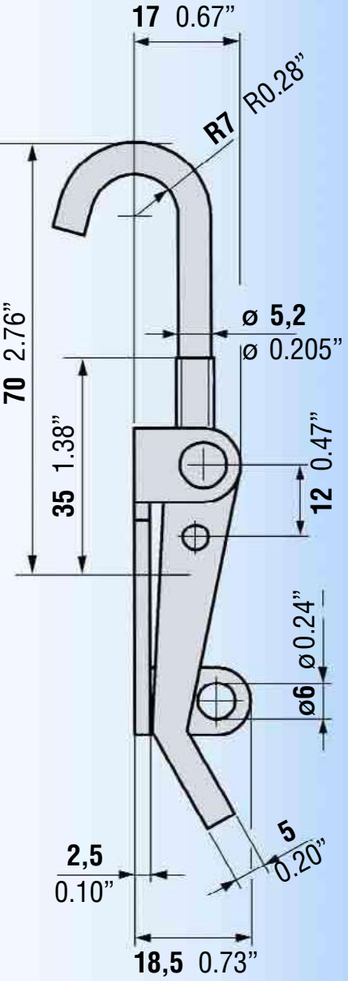

702 L

Hinged screw-loop

L = 108 – 122 4.25”–4.80”

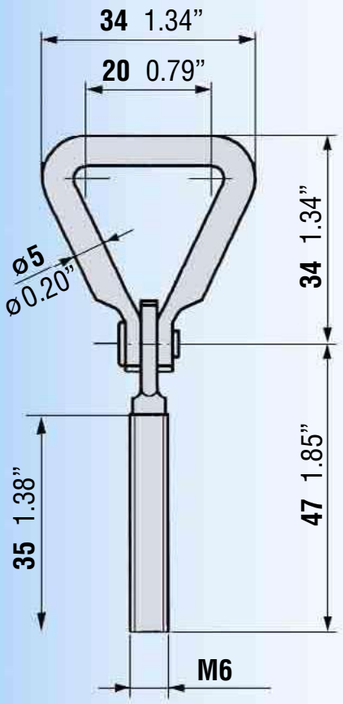

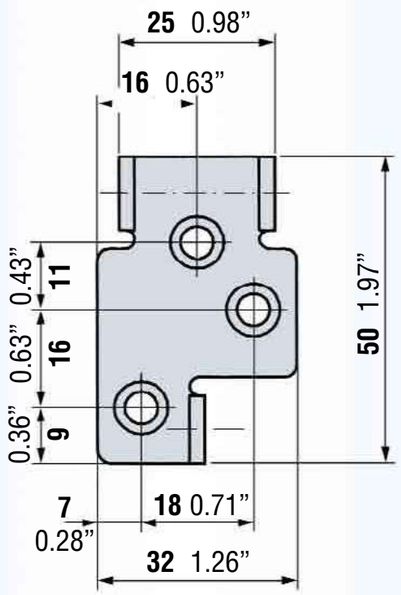

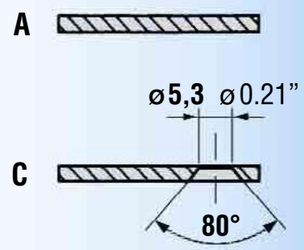

702 T

L = 94 – 112 3.46”–4.41”

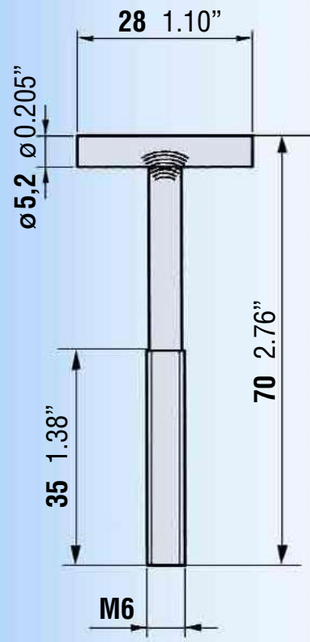

702

L = 98 – 122 3.86”–4.80”

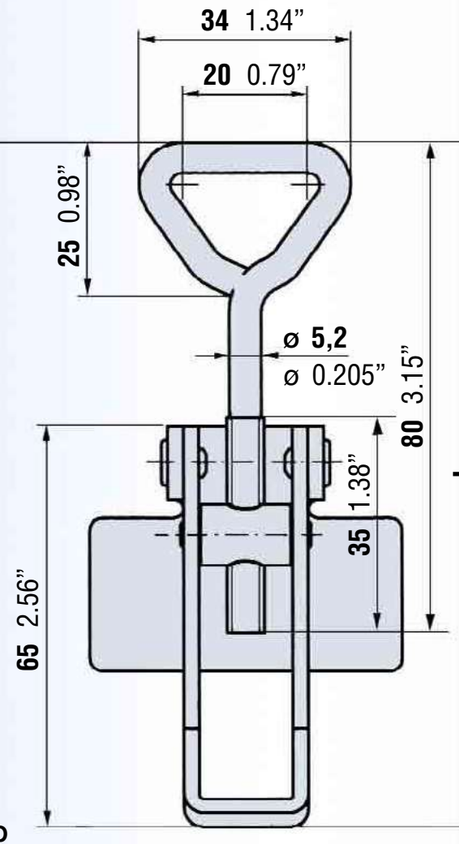

702 H

L = 88 – 112 3.46”–4.41”

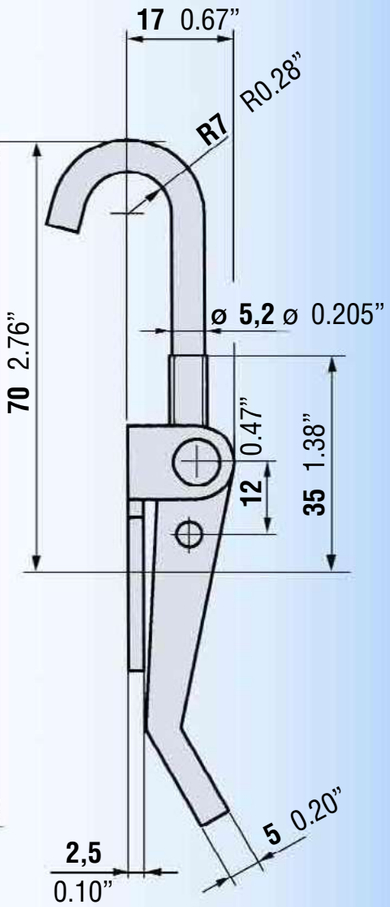

702

Hinged screw-loop

L = 98 – 122 3.86”– 4.80”

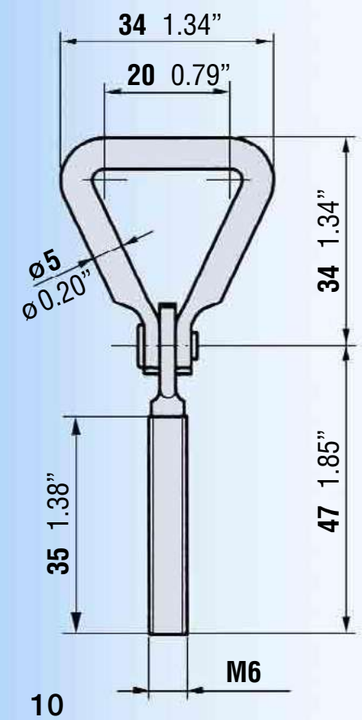

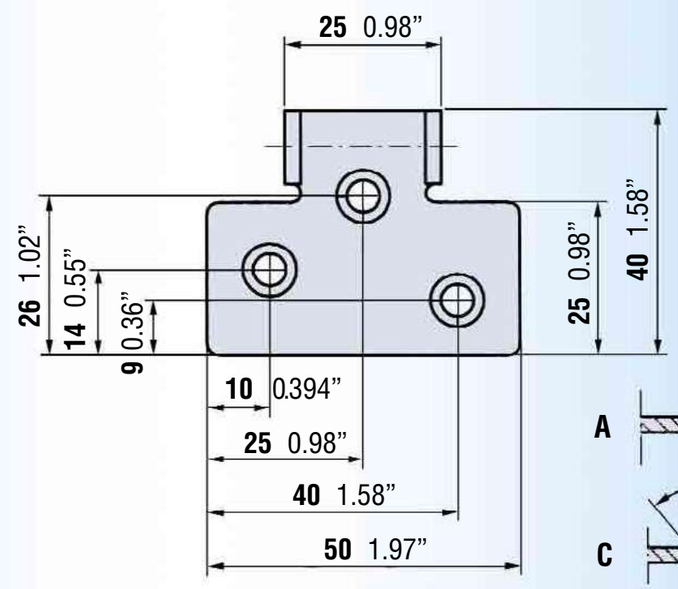

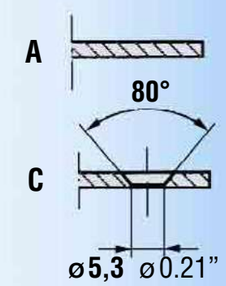

703 – 704

Strikers
16, 19, 22 or 41

Strikers
17 or 20

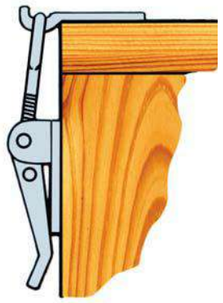

Strikers,
see pages: 31–36

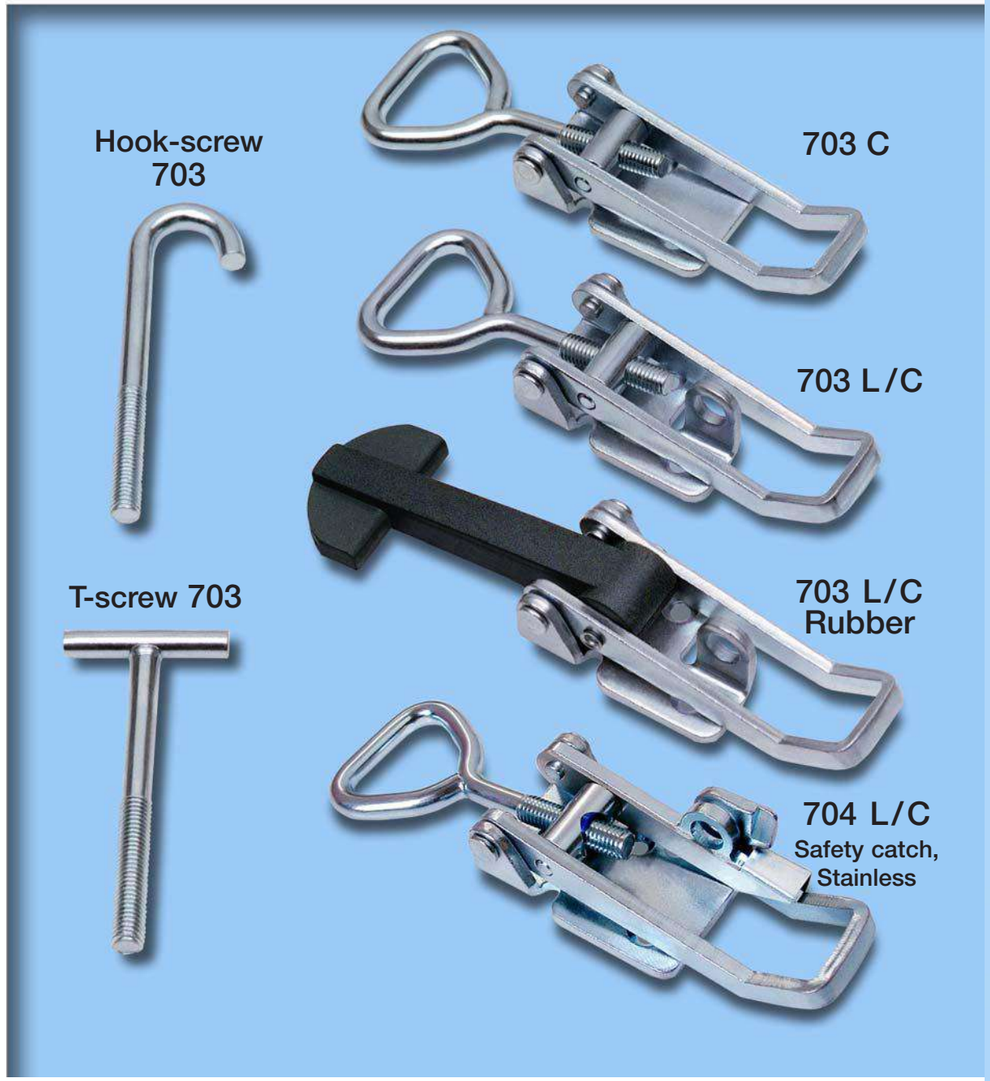

Combinations		Capacity			Weight	
		Recommended maximum load			Weight per 100 pcs.	
Catch	Striker	Kp	N	Pounds	Kilos	Pounds
703 L/C	20, 22, 41	500	4905	1101	20,1	44.3
703 TL/C	16, 17	500	4905	1101	18,8	41.4
703 HL/C	–	150	1471	330	18,9	41.6
703 C	20, 22, 41	500	4905	1101	20,8	45.8
703 T/C	16, 17	500	4905	1101	19,4	42.7
703 H/C	–	150	1471	330	19,5	43.0
703 L/C Rubber	16				16,7	36.8
703 C Rubber	16				17,4	38.3
704 L/C	20, 22, 41	500	4905	1101	22,8	50,2

703 T
L = 135–163 5.31”–6.42”

703
L = 145–164 5.71”–6.46”

703 H
L = 145–174 5.71”–6.85”

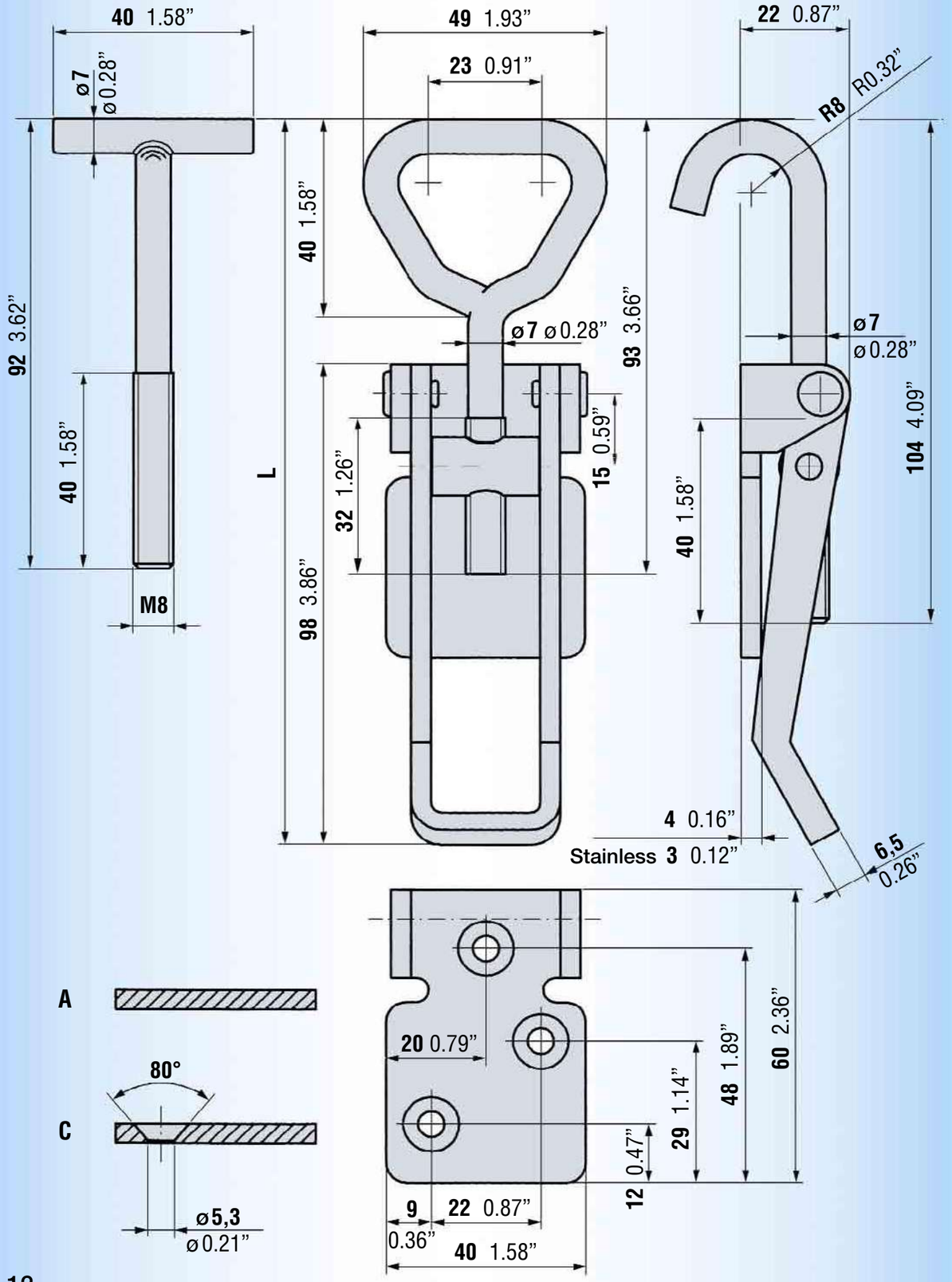

703 TL

L = 149–164 5.87”–6.46”

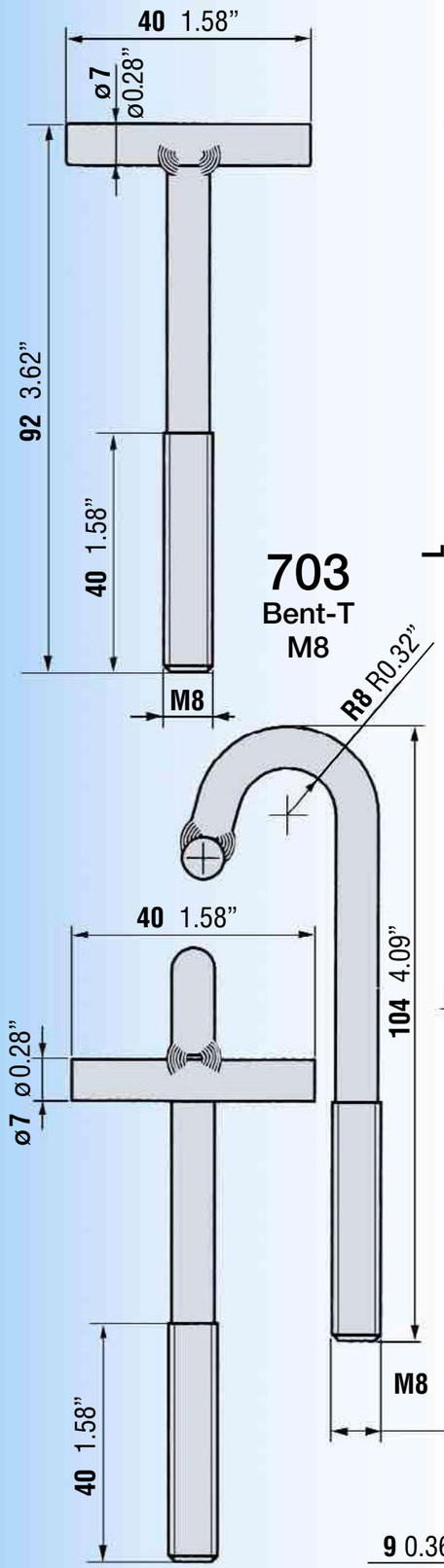

703 Bent-T M8

703 L

L = 149–164 5.87”–6.46”

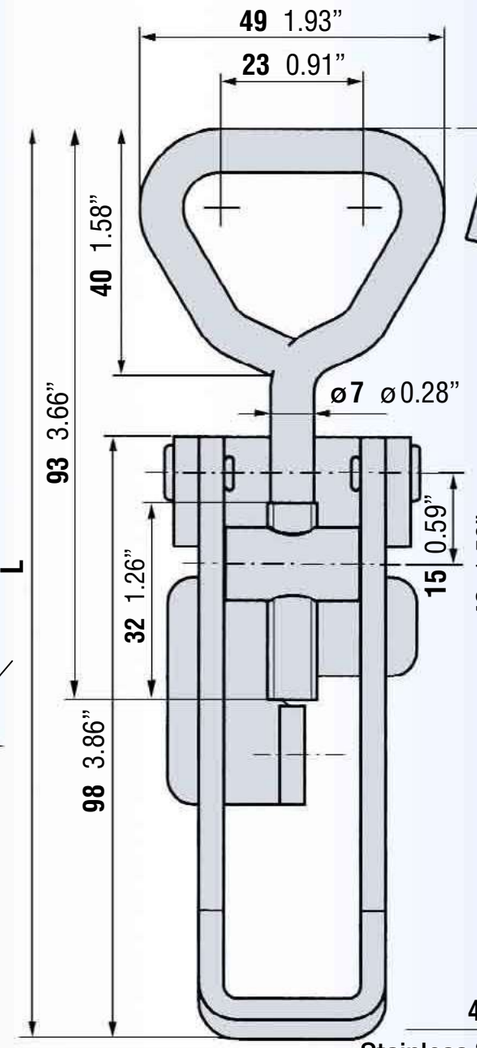

703 HL

L = 159–174 6.26”–6.85”

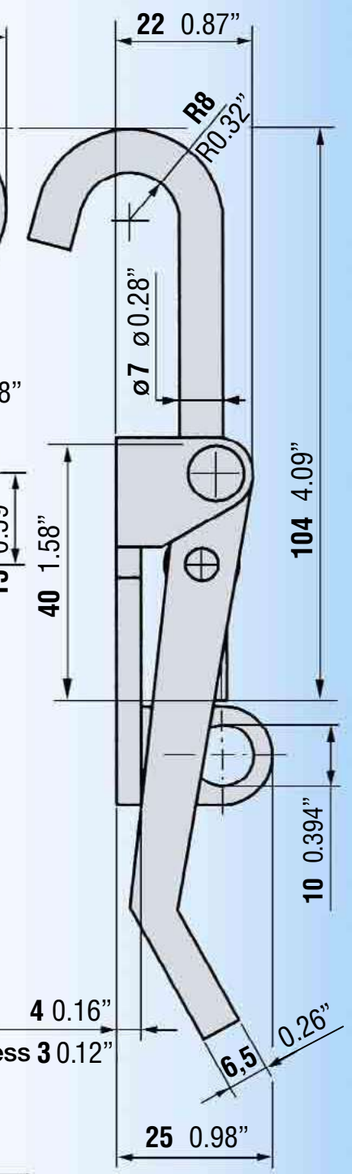

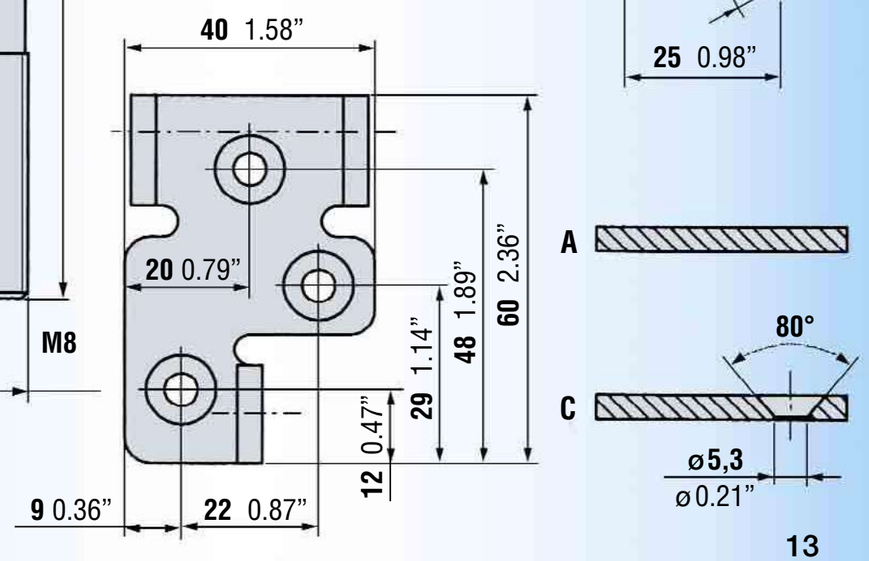

703 Rubber

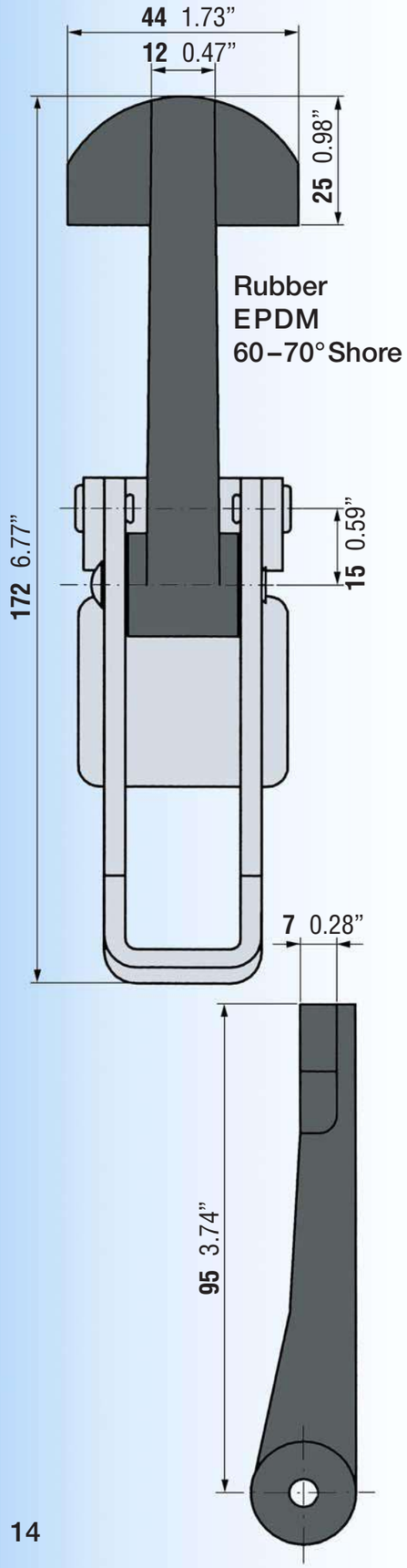

704 L/C With safety catch

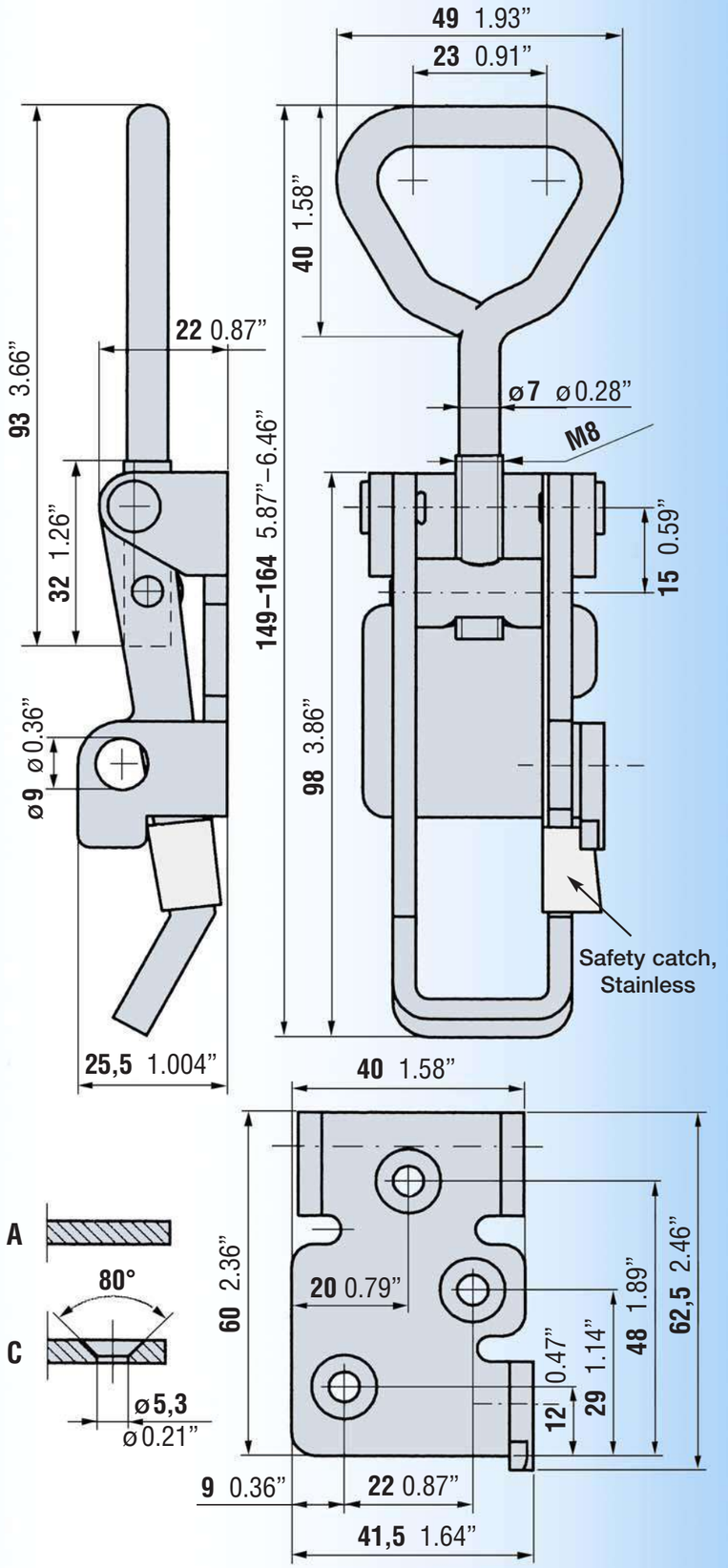

900

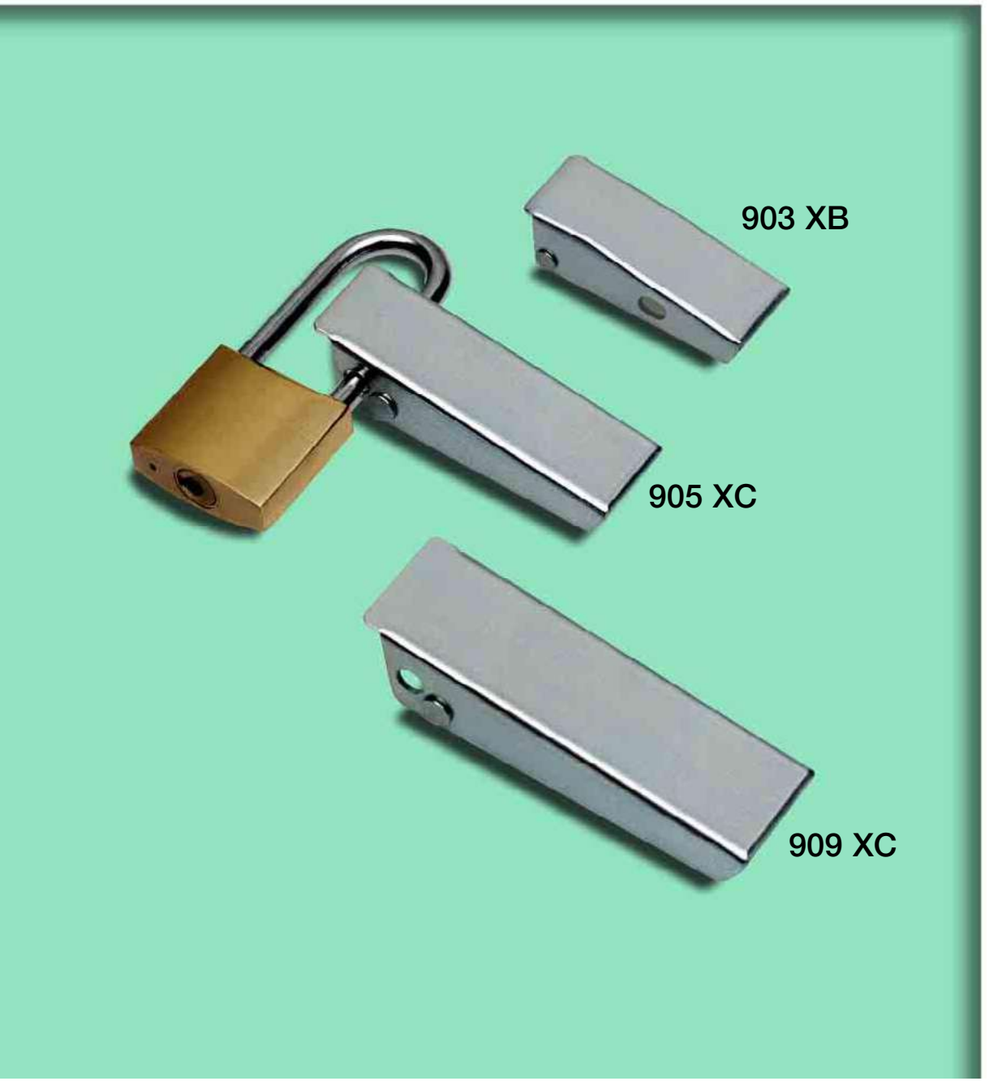

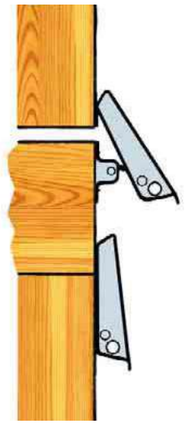

Strikers
94, 95 or 99

Strikers,
see page: 31–36

Combinations		Capacity			Weight	
Catch	Striker	Recommended maximum load			Weight per 100 pcs.	
		Kp	N	Pounds	Kilos	Pounds
903 XB	94	75	736	165	4,9	10.8
905 XC	95	100	981	220	7,6	16.7
909 XC	99	125	1226	275	12,3	27.1

903 XB

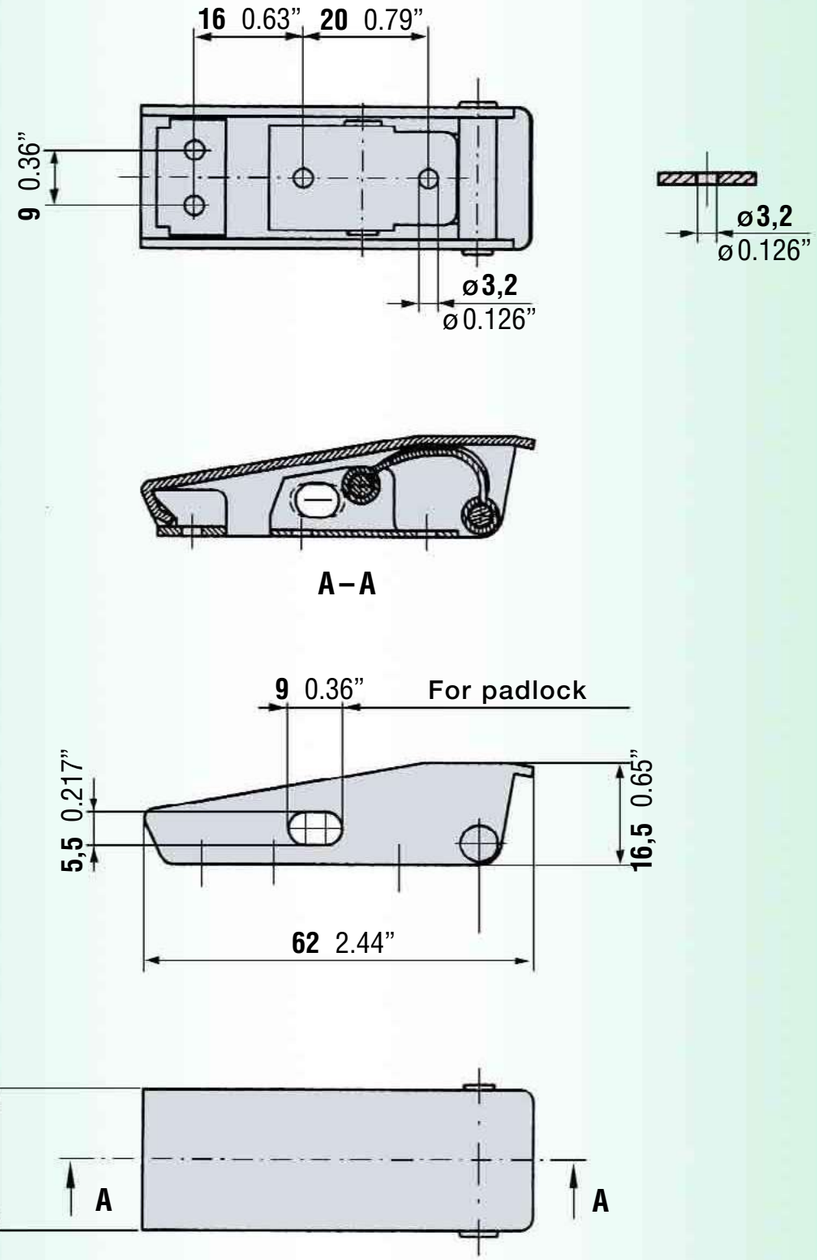

Sheet thickness: **1,5** 0.06”

905 XC

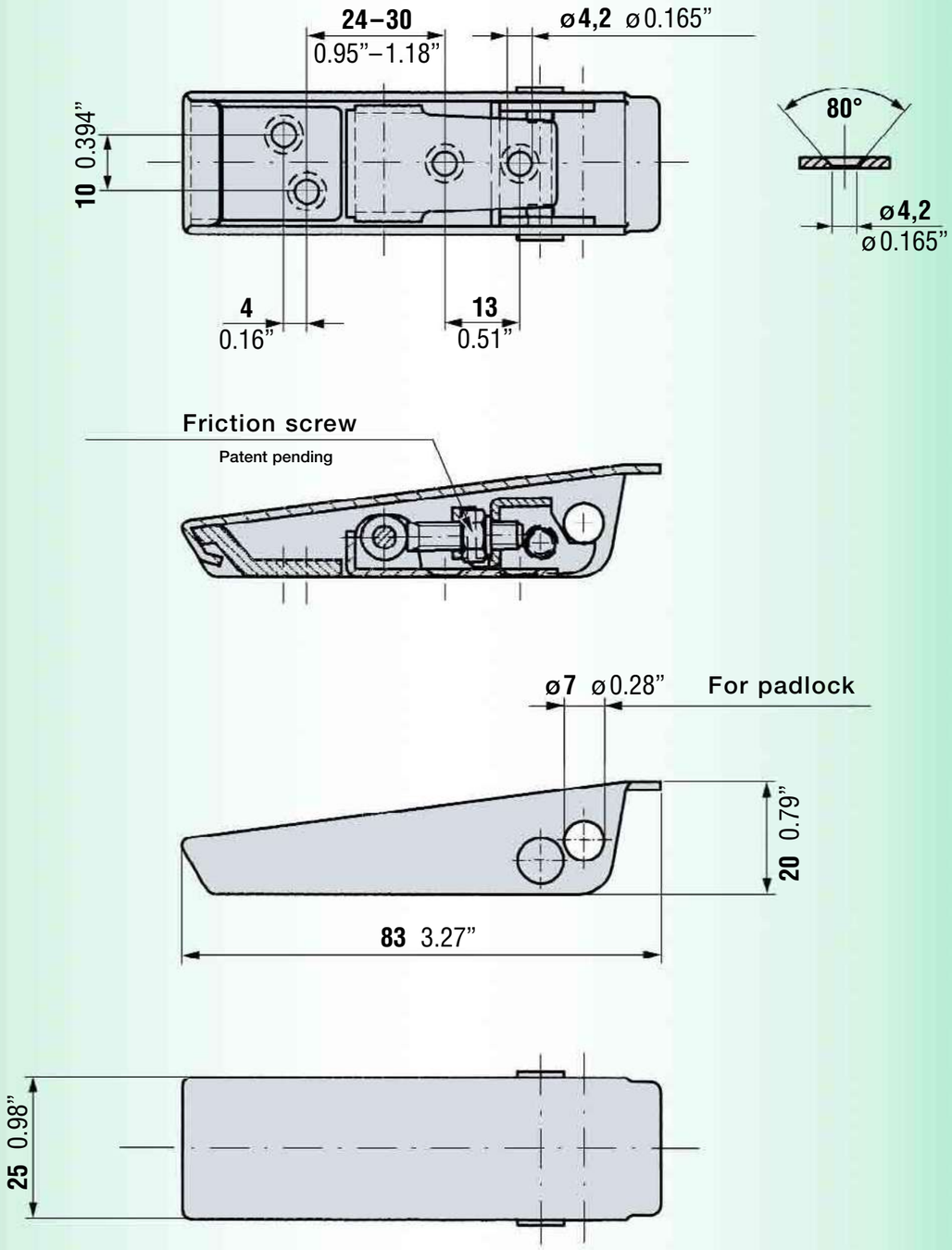

Sheet thickness: **1,5** 0.06”

909 XC

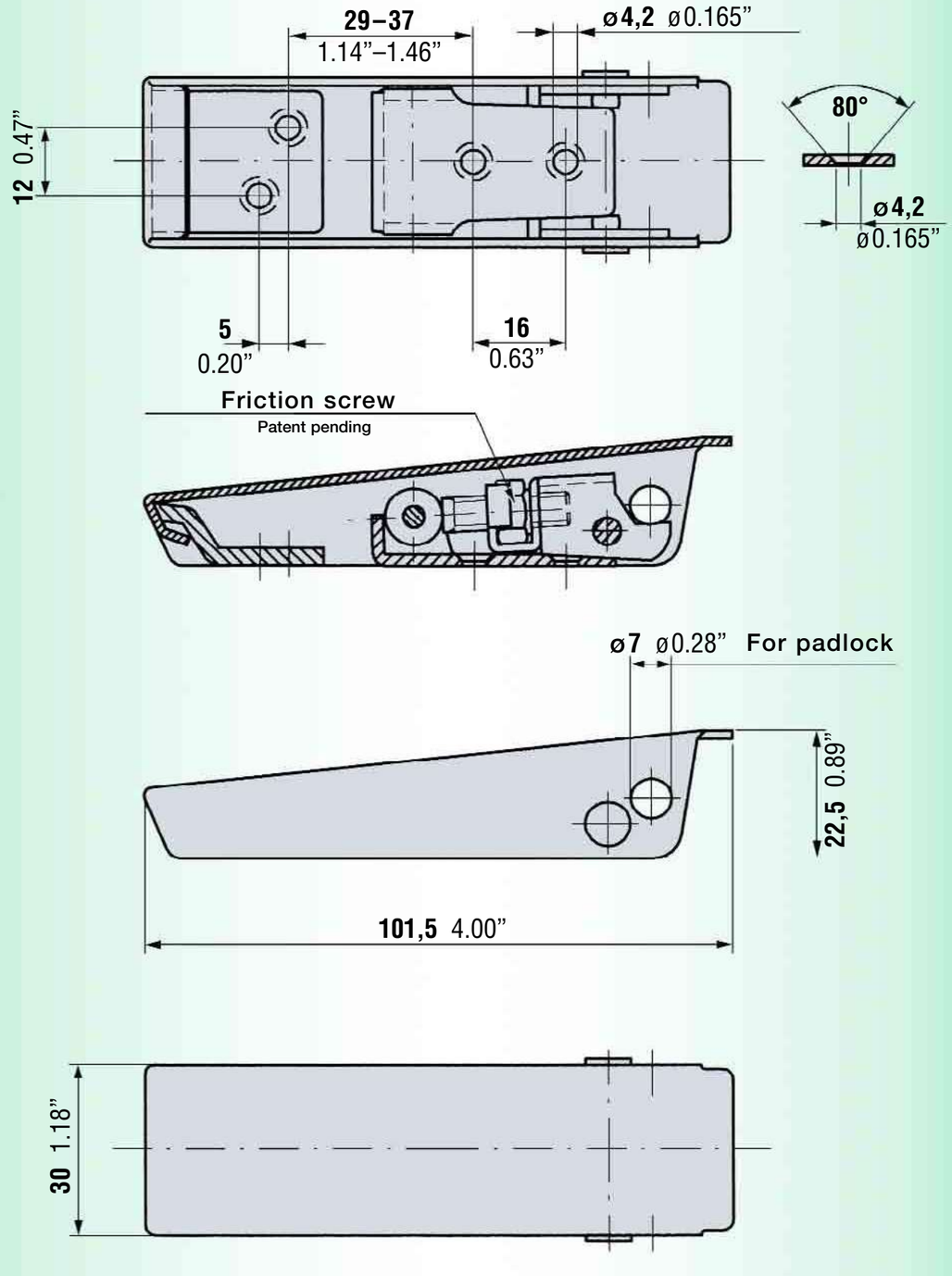

Sheet thickness: **1,5** 0.06”

Powder-coated

Strikers
22, 31 or 41

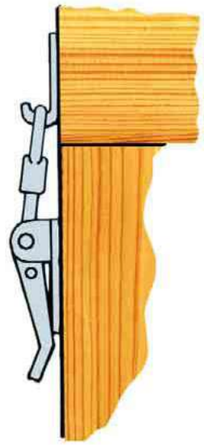

Strikers
10 or 20

Strikers,
see pages: 31–36

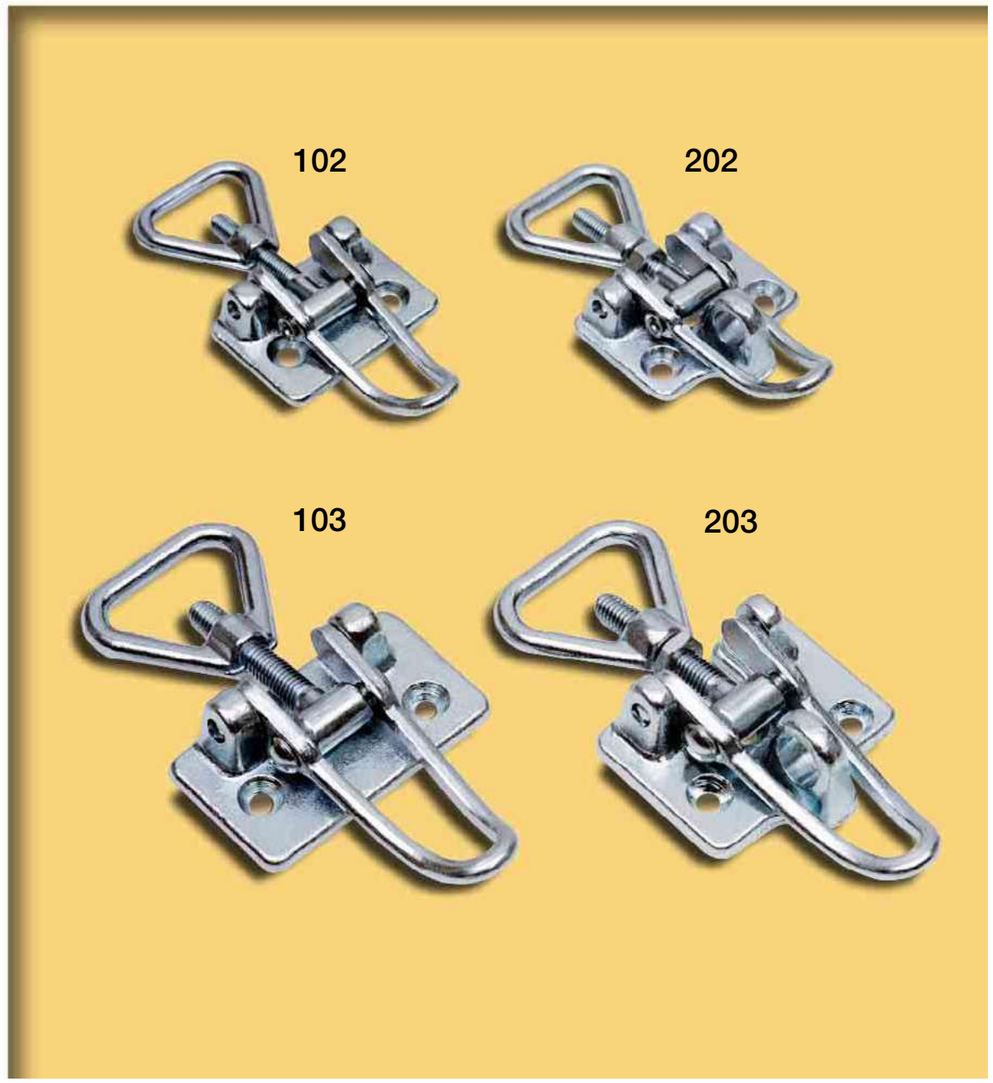

Combinations		Capacity			Weight	
Catch	Striker	Recommended maximum load			Weight per 100 pcs.	
		Kp	N	Pounds	Kilos	Pounds
102	10, 31	300	2943	660	10,2	22.5
103	20, 22, 41	500	4905	1101	21,2	46.7
202	10, 31	300	2943	660	11,8	26.0
203	20, 22, 41	500	4905	1101	23,0	50.7

102

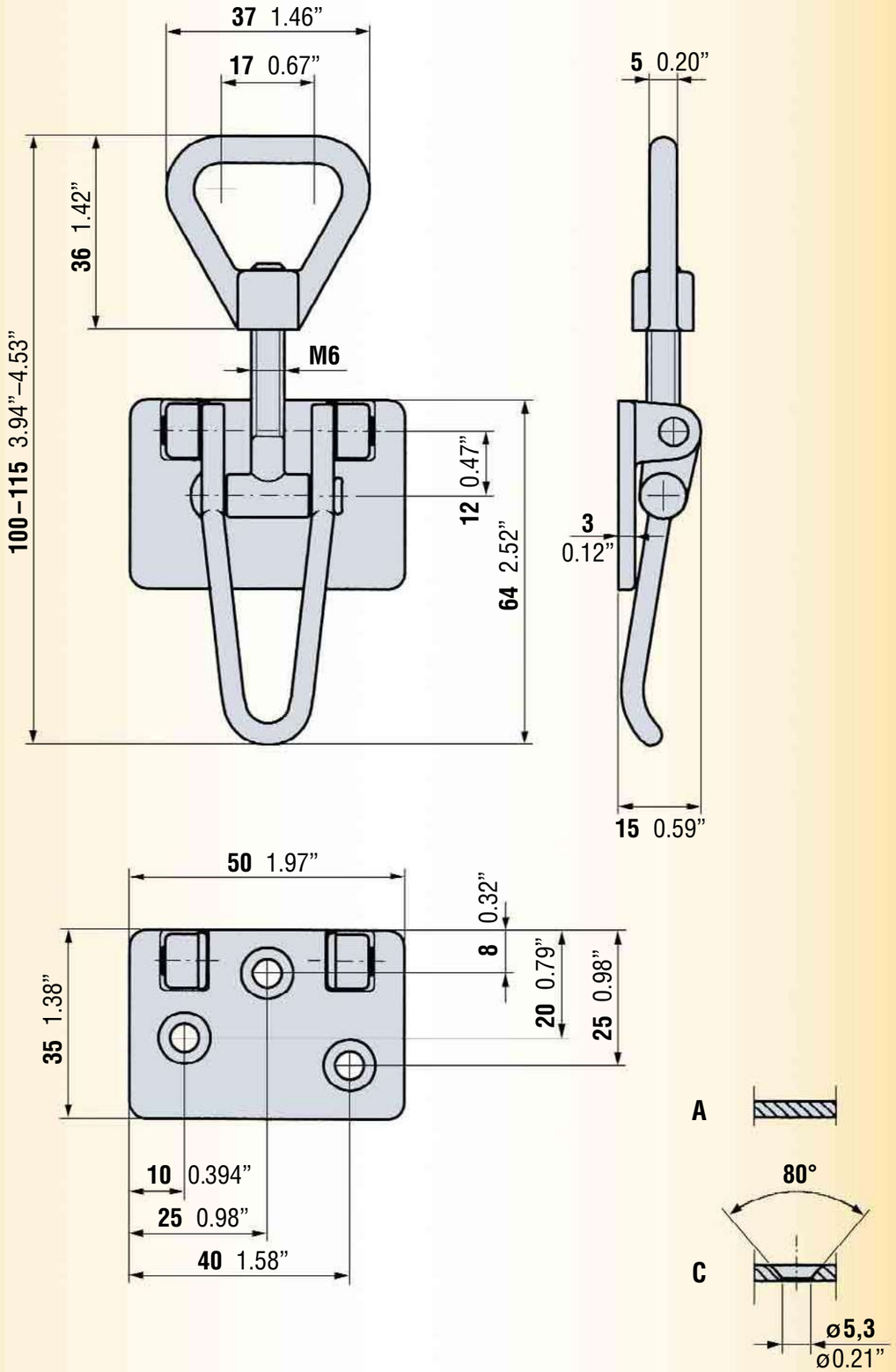
37 1.46”
17 0.67”
5 0.20”
36 1.42”
100–115 3.94”–4.53”
M6
12 0.47”
64 2.52”
3
0.12”
15 0.59”
50 1.97”
8 0.32”
35 1.38”
20 0.79”
25 0.98”
10 0.394”
25 0.98”
40 1.58”
A
80°
C
ø5,3
ø0.21”

103

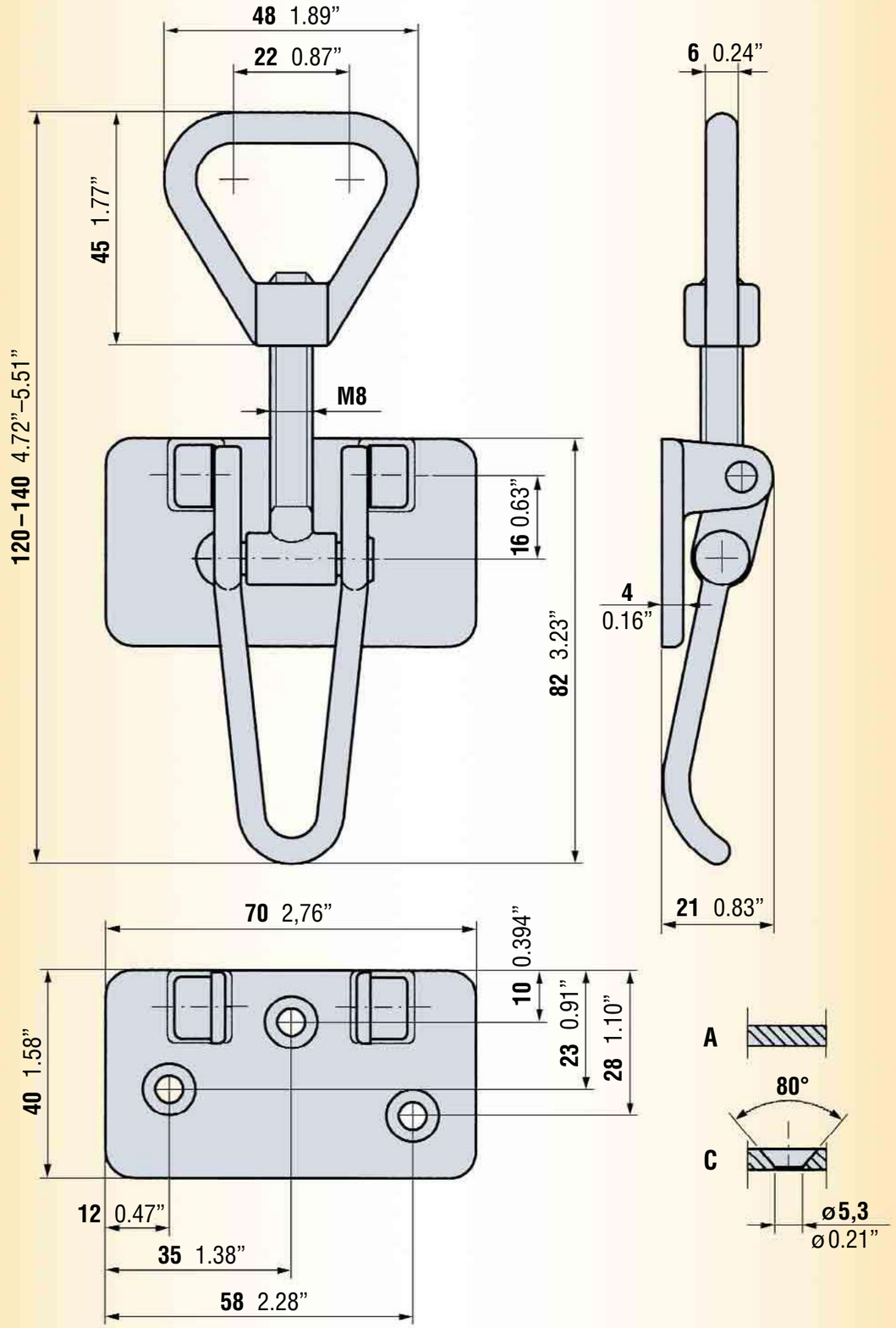
48 1.89”
22 0.87”
6 0.24”
45 1.77”
120–140 4.72”–5.51”
M8
16 0.63”
82 3.23”
4
0.16”
21 0.83”
70 2,76”
10 0.394”
40 1.58”
23 0.91”
28 1.10”
A
80°
C
12 0.47”
35 1.38”
58 2.28”
ø5,3
ø0.21”

202

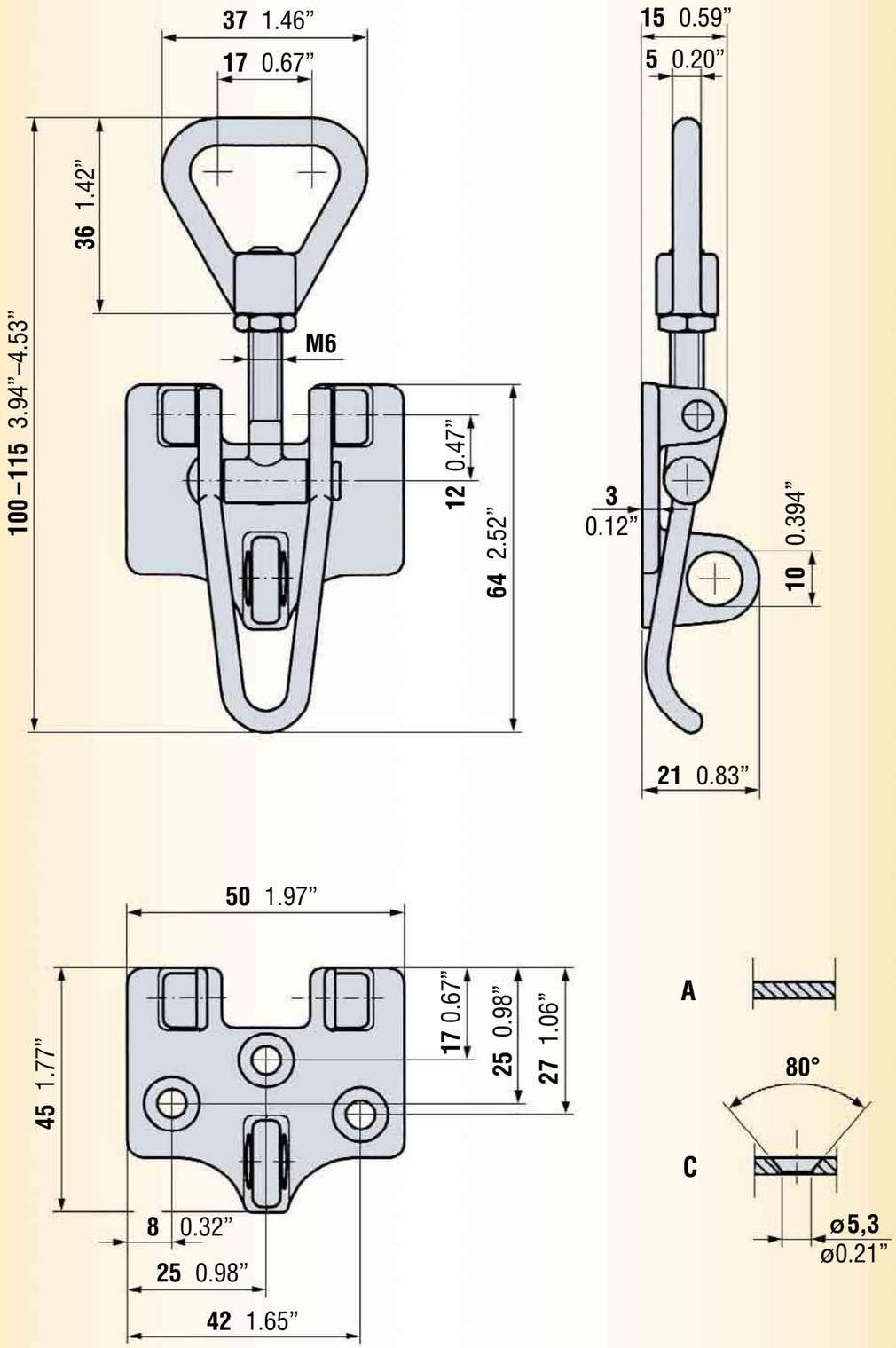
37 1.46”
17 0.67”
36 1.42”
100–115 3.94”–4.53”
M6
12 0.47”
64 2.52”
15 0.59”
5 0.20”
3
0.12”
10 0.394”
21 0.83”
50 1.97”
45 1.77”
17 0.67”
25 0.98”
27 1.06”
8 0.32”
25 0.98”
42 1.65”
A
80°
C
ø5,3
ø0.21”

203

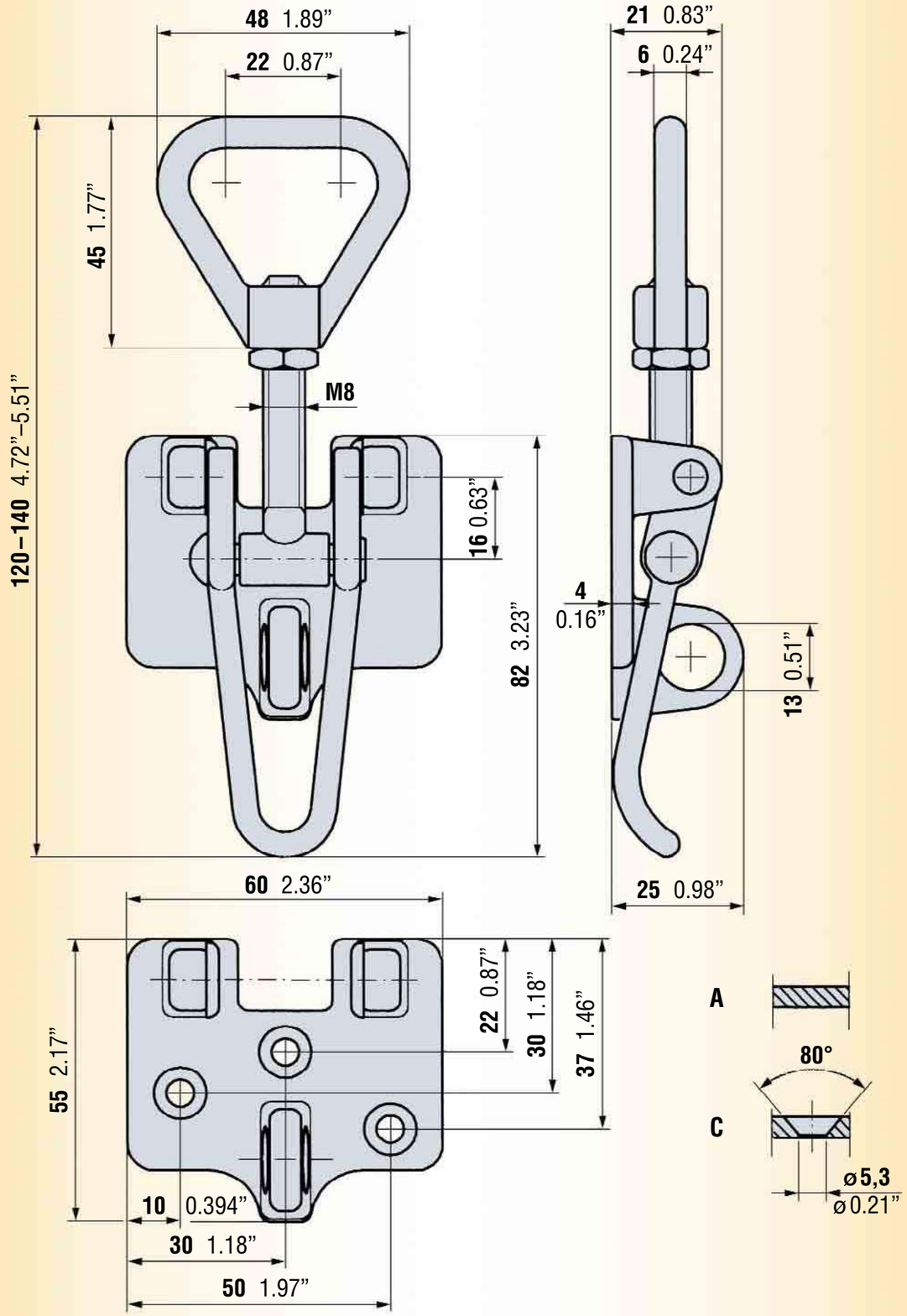
48 1.89”
22 0.87”
21 0.83”
6 0.24”
45 1.77”
120–140 4.72”–5.51”
M8
16 0.63”
82 3.23”
4
0.16”
13 0.51”
25 0.98”
60 2.36”
55 2.17”
22 0.87”
30 1.18”
37 1.46”
10 0.394”
30 1.18”
50 1.97”
A
80°
C
ø5,3
ø0.21”

Typ 721 Verschlüsse ähnlich DIN 3134

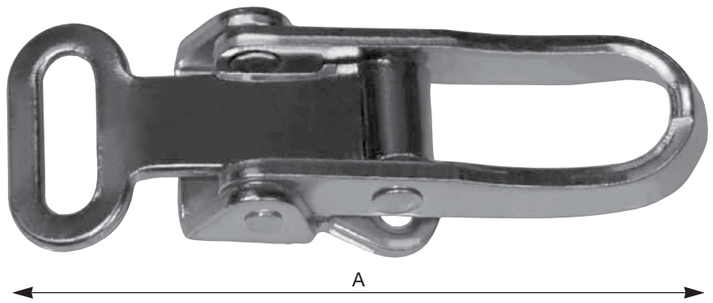

721 1. .. Stahl-roh, ungelocht
721 2. .. Stahl-roh, gelocht
721 4. .. Stahl galvanisch-verzinkt, gelocht

Artikel-Nr.:	A	Breite	passender Schließhaken siehe Seite 101/102	
	mm	mm	Art.-Nr.:	Abmessung
... .0 21	56	13	728	13 x 16
			729	13 x 30
... .0 22	76	15	728	15 x 21
			729	15 x 50
... .0 23	98	18	728	18 x 23
			729	18 x 50

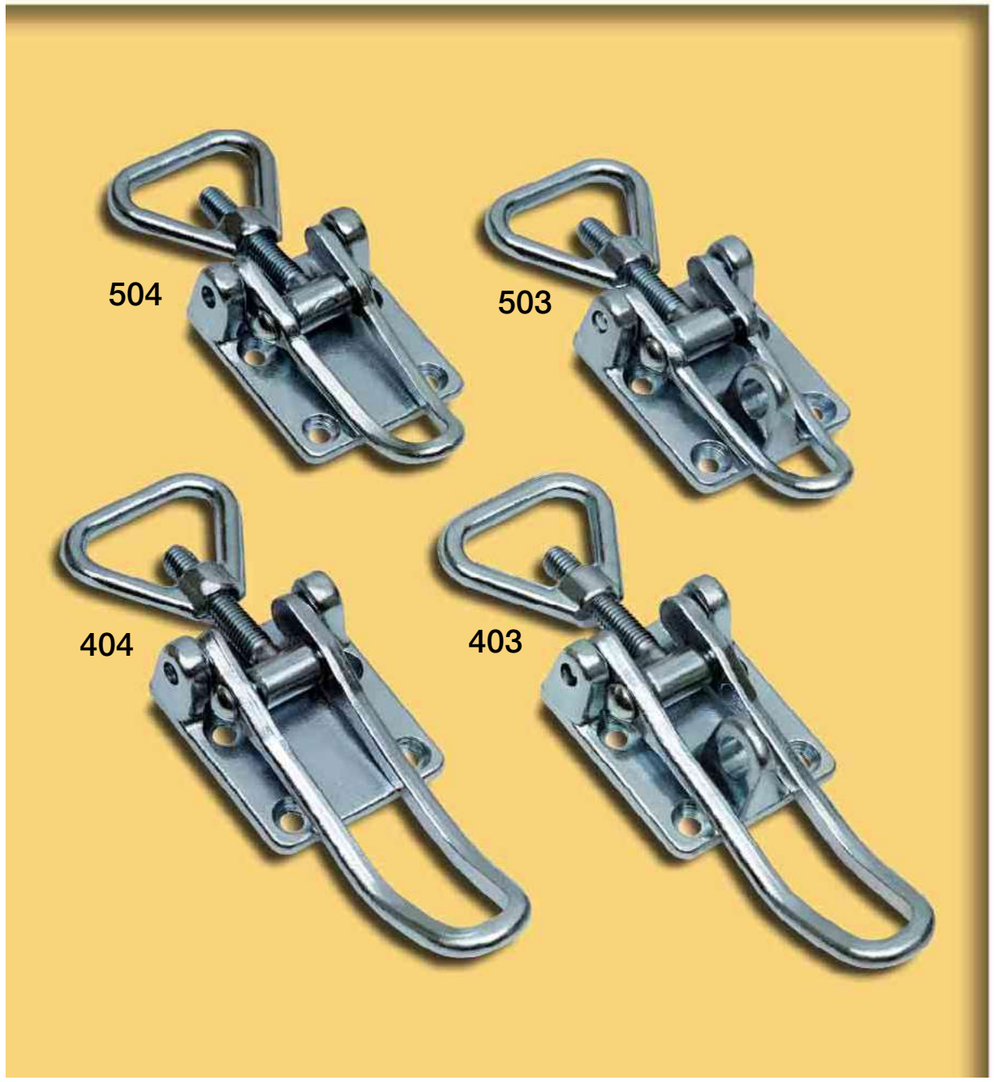

Strikers
22 or 41

Striker
20

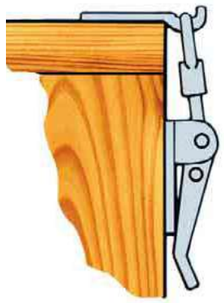

Strikers,
see pages: 31 – 36

Combinations		Capacity			Weight	
Catch	Striker	Recommended maximum load			Weight per 100 pcs.	
		Kp	N	Pounds	Kilos	Pounds
403	20, 22, 41	600	5886	1321	25,6	56.4
404	20, 22, 41	600	5886	1321	23,4	51.5
503	20, 22, 41	500	4905	1101	23,2	51.1
504	20, 22, 41	500	4905	1101	20,0	44.1

403

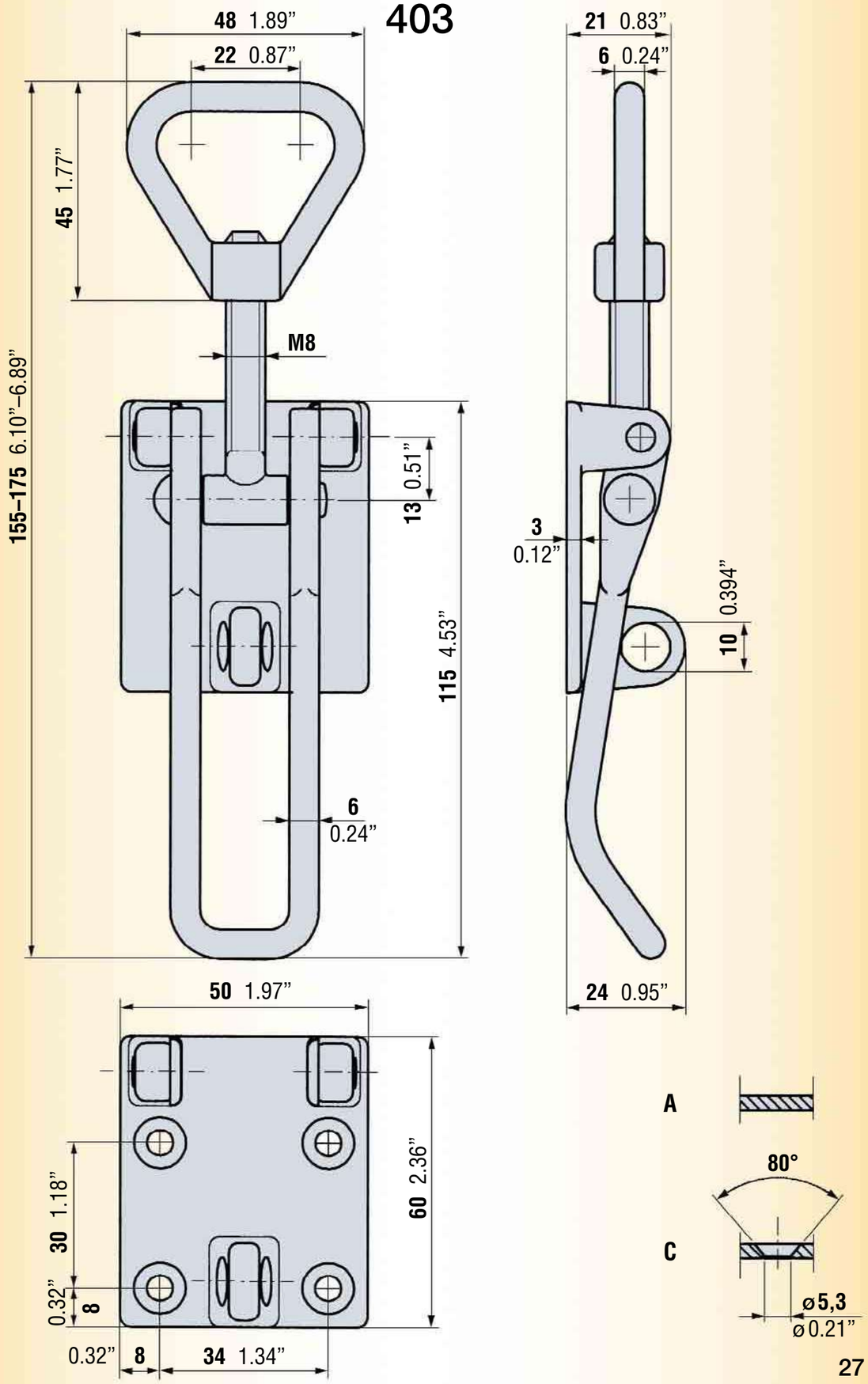
48 1.89”
22 0.87”
45 1.77”
M8
155–175 6.10”–6.89”
13 0.51”
115 4.53”
6
0.24”
21 0.83”
6 0.24”
3
0.12”
10 0.394”
24 0.95”
50 1.97”
60 2.36”
30 1.18”
0.32”
8
0.32”
8
34 1.34”
A
80°
C
ø5,3
ø0.21”

404

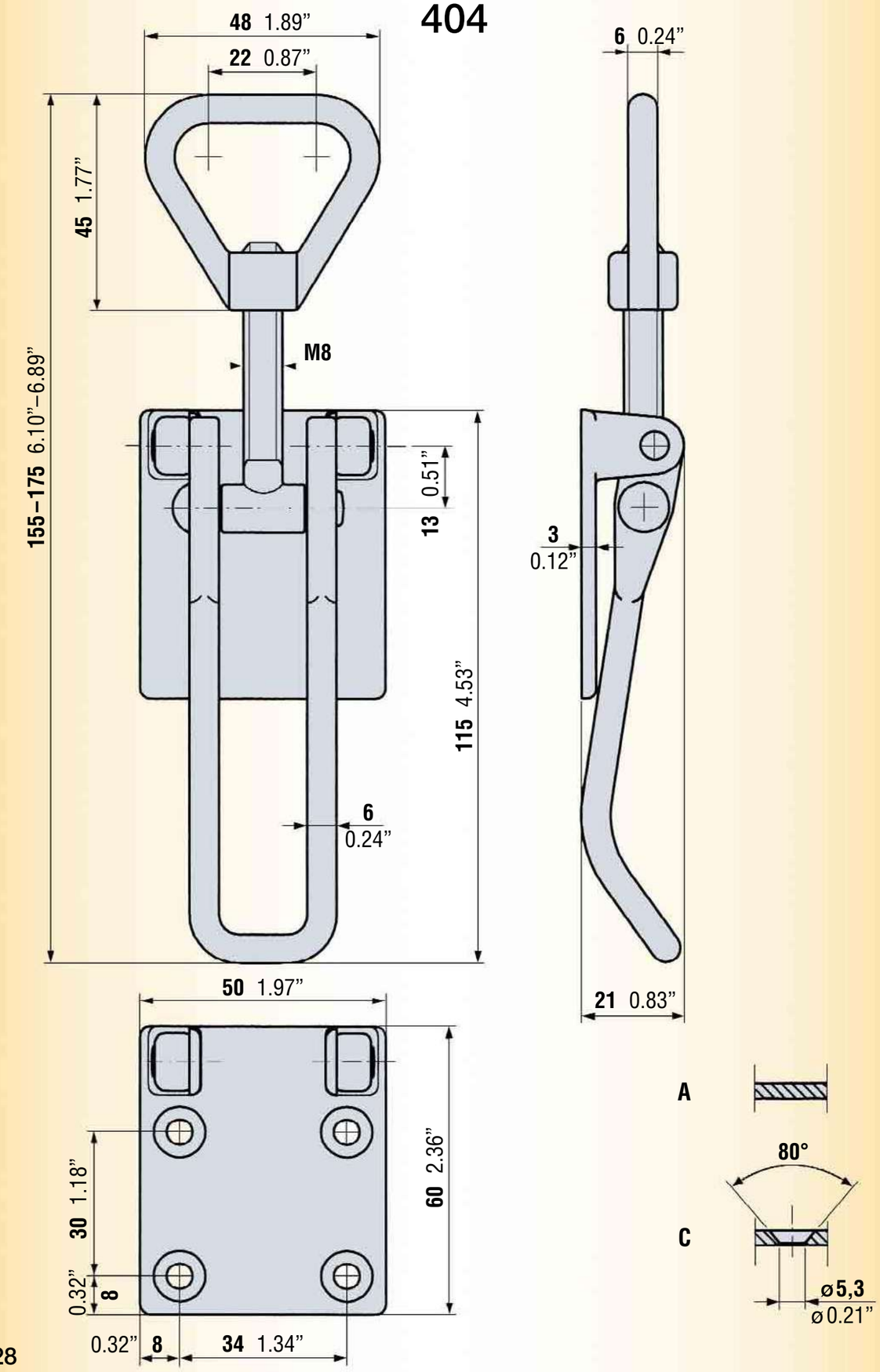
48 1.89”
22 0.87”
45 1.77”
M8
155–175 6.10”–6.89”
13 0.51”
115 4.53”
6
0.24”
6 0.24”
3
0.12”
21 0.83”
50 1.97”
60 2.36”
30 1.18”
0.32”
8
0.32”
8
34 1.34”
A
80°
C
ø5,3
ø0.21”

503

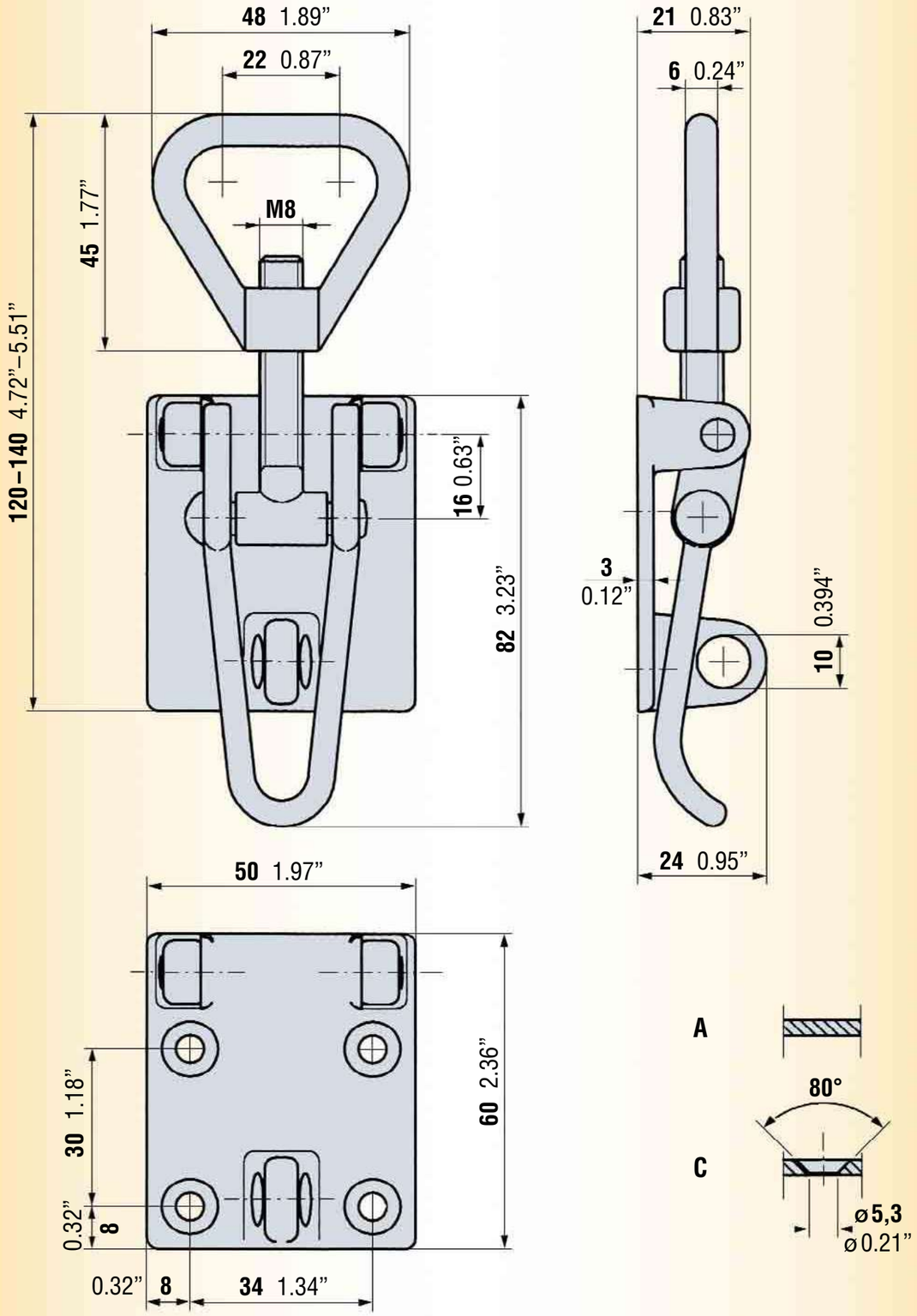
48 1.89”
22 0.87”
M8
45 1.77”
120–140 4.72”–5.51”
16 0.63”
82 3.23”
21 0.83”
6 0.24”
3
0.12”
0.394”
10
24 0.95”
50 1.97”
60 2.36”
30 1.18”
0.32”
8
0.32”
8
34 1.34”
A
80°
C
ø5,3
ø0.21”

504

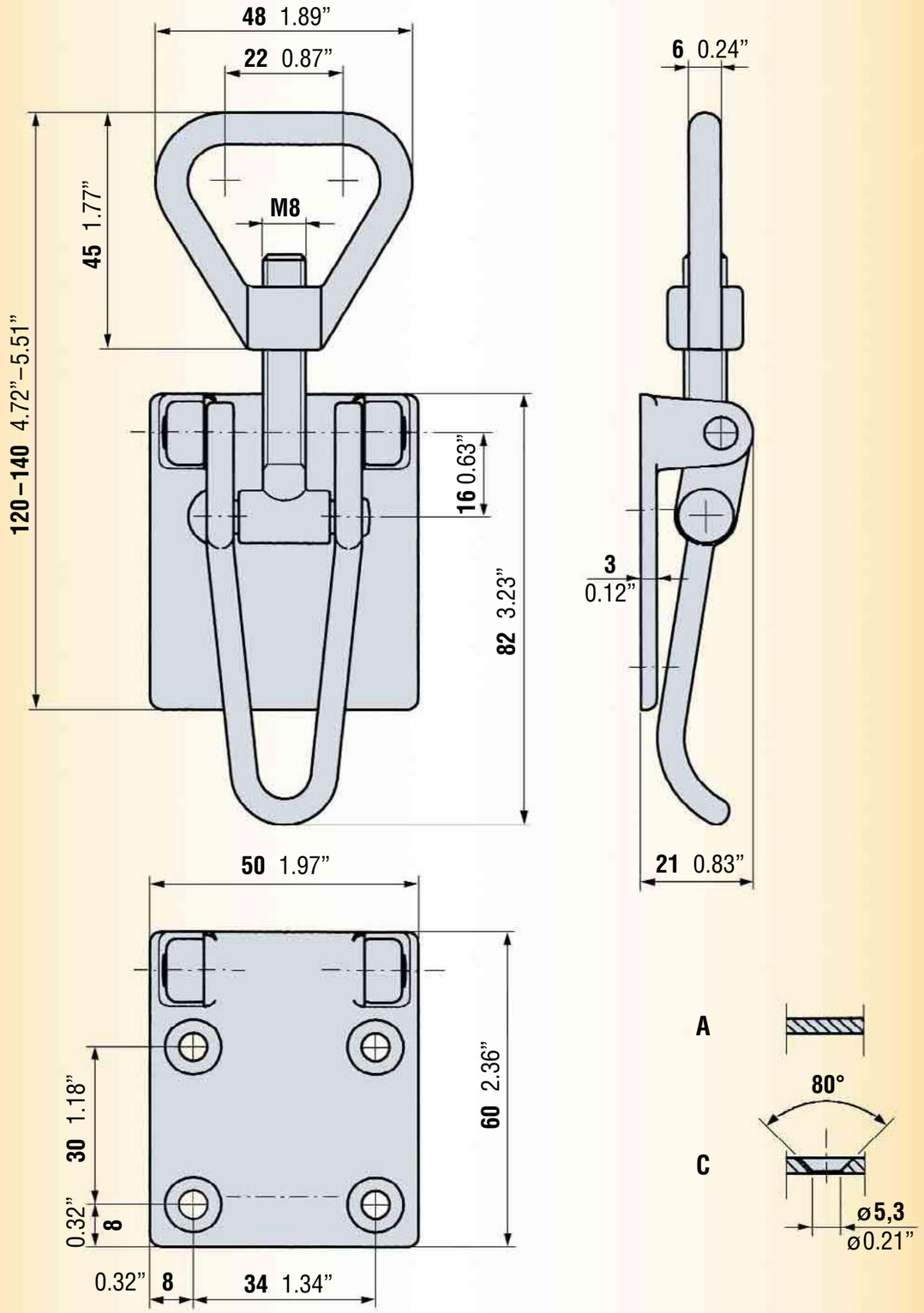
48 1.89”
22 0.87”
M8
45 1.77”
120–140 4.72”–5.51”
16 0.63”
82 3.23”
6 0.24”
3
0.12”
21 0.83”
50 1.97”
60 2.36”
30 1.18”
0.32”
8
0.32”
8
34 1.34”
A
80°
C
ø5,3
ø0.21”

Strikers

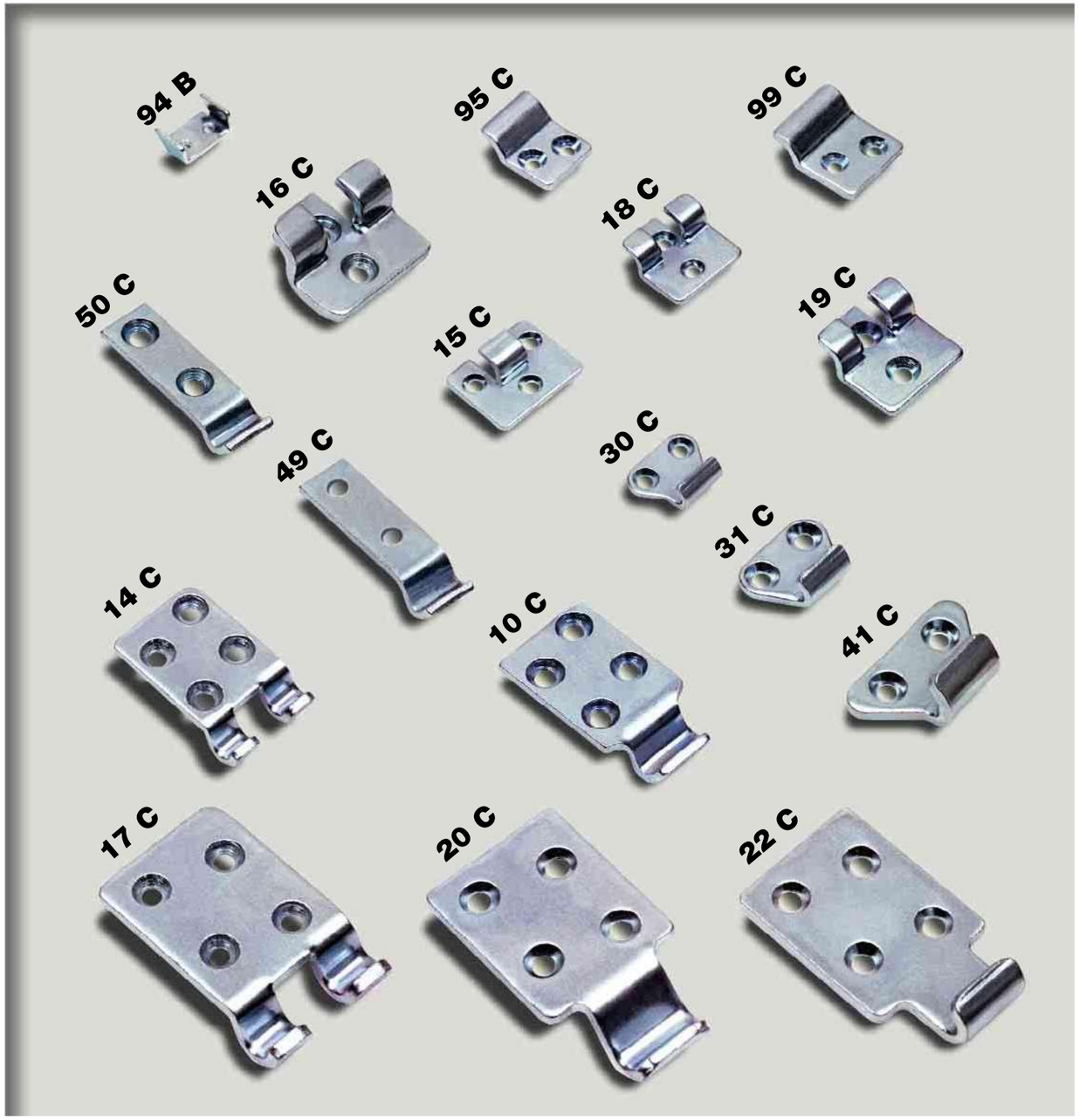

Weight per 100 pcs.																	
Catch	**10**	**14**	**15**	**16**	**17**	**18**	**19**	**20**	**22**	**30**	**31**	**41**	**49**	**50**	**94**	**95**	**99**
Kilos	3,2	3,7	1,0	3,9	7,4	1,0	2,1	7,6	7,4	0,6	1,3	3,2	1,8	1,6	0,3	1,1	1,6
Pounds	7.1	8.1	2.2	8.6	16.3	2.2	4.6	16.7	16.3	1.3	2.9	7.1	4.0	3.5	0.7	2.4	3.5

10 C

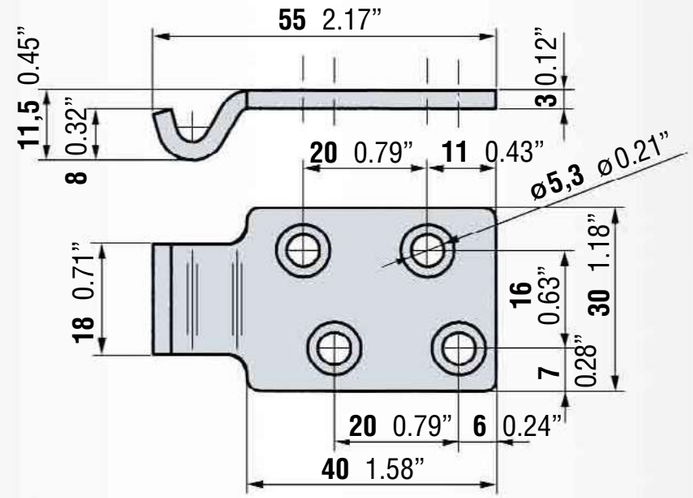

14 C

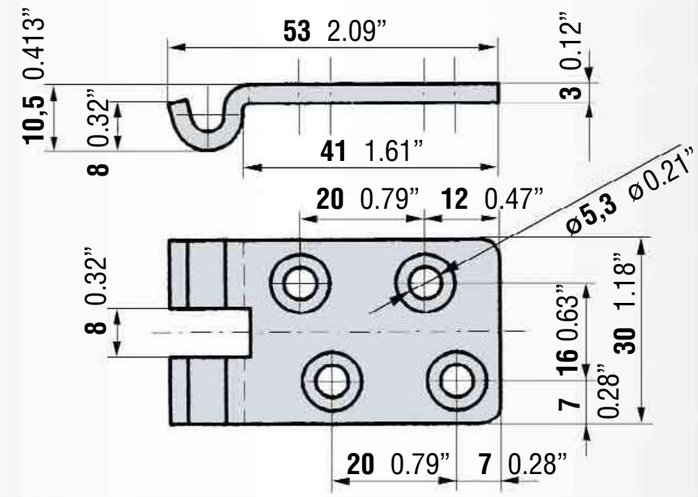

15 C

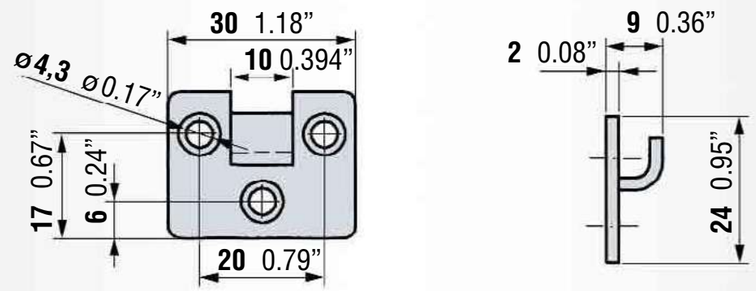

16 C

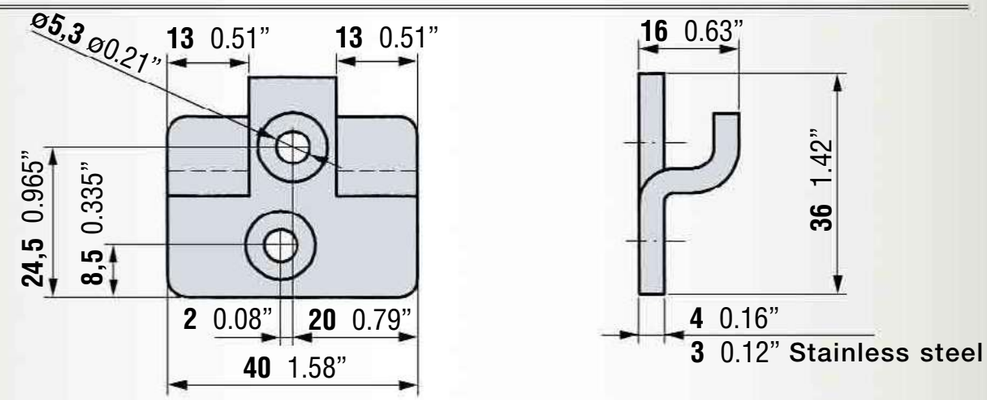

17 C

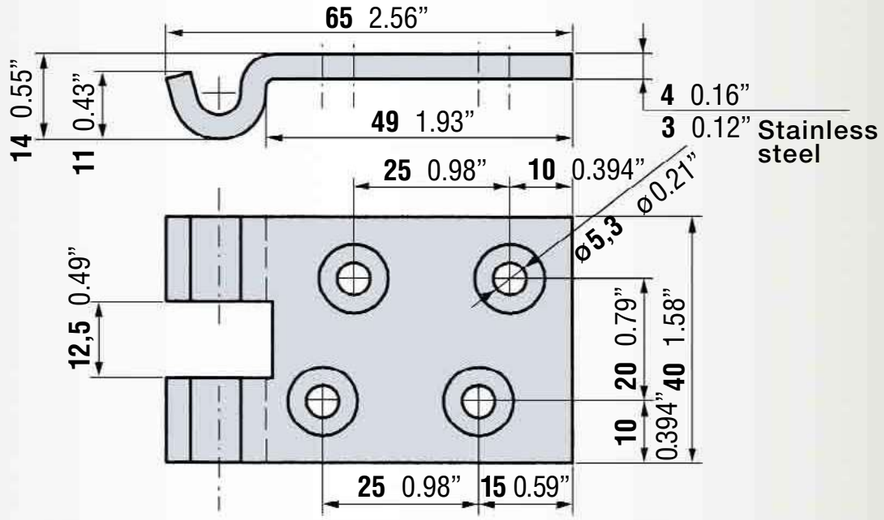

18 C

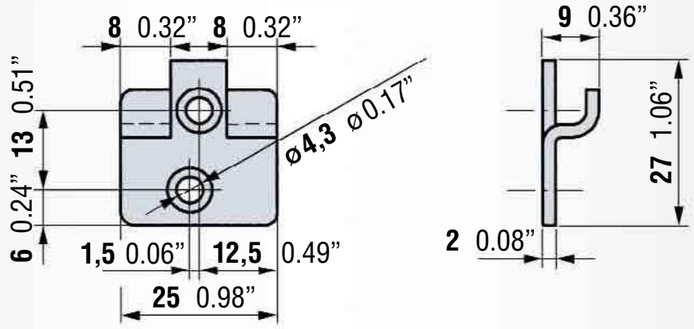

19 C

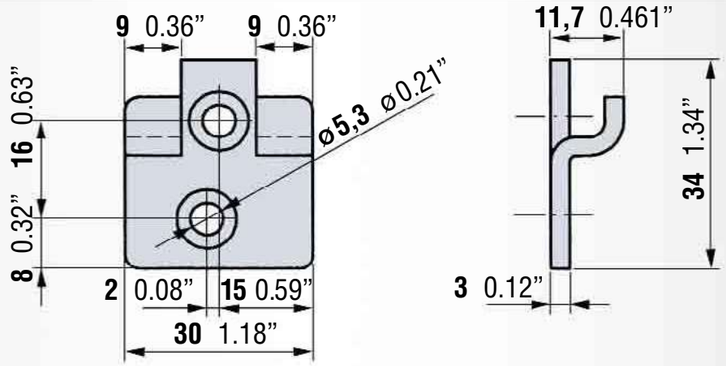

20 C

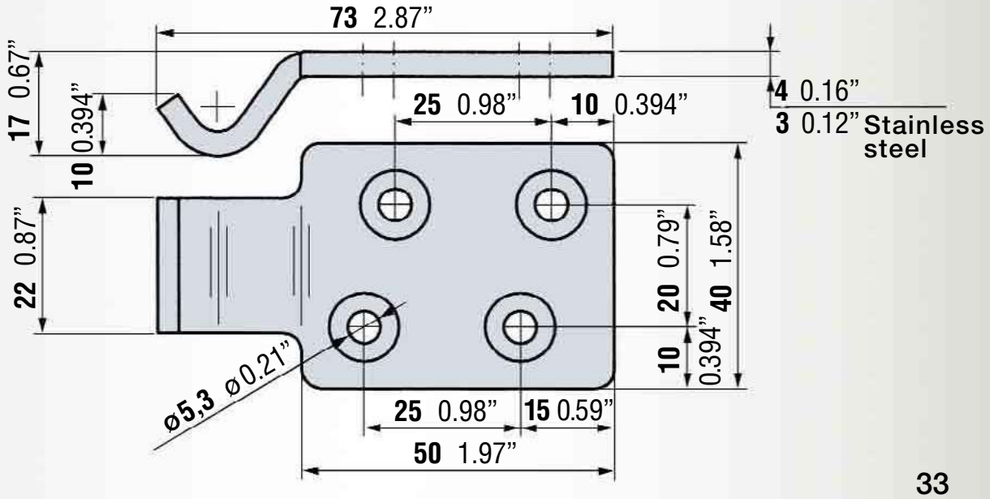

22 C

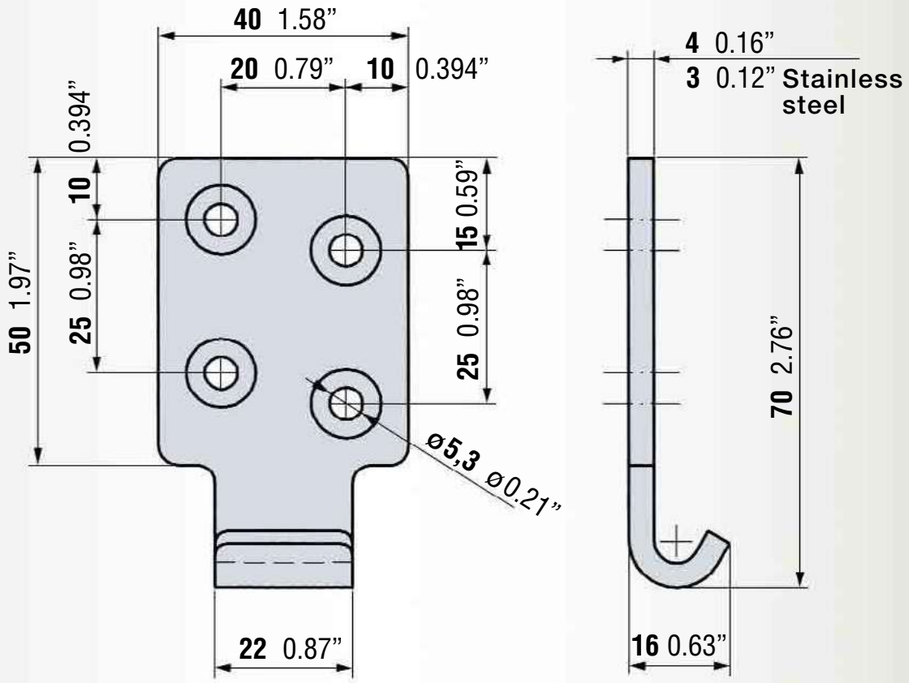

30 C

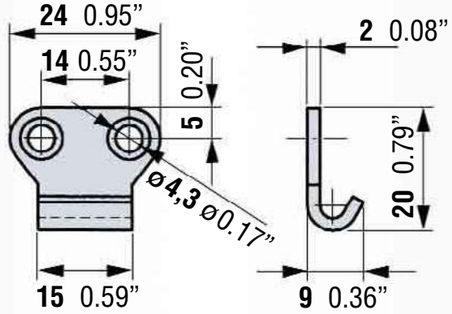

31 C

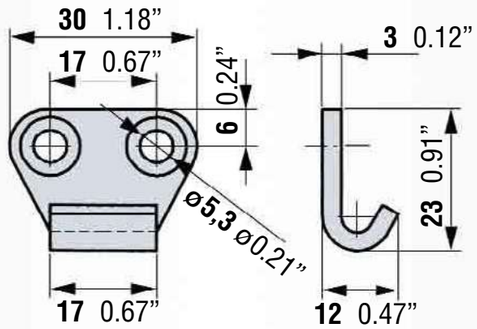

41 C

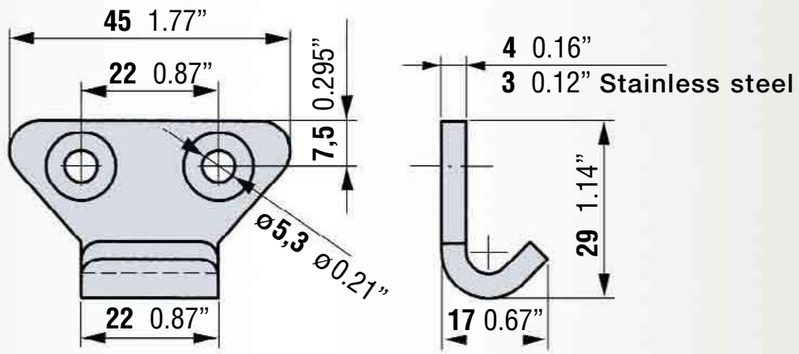

49 C

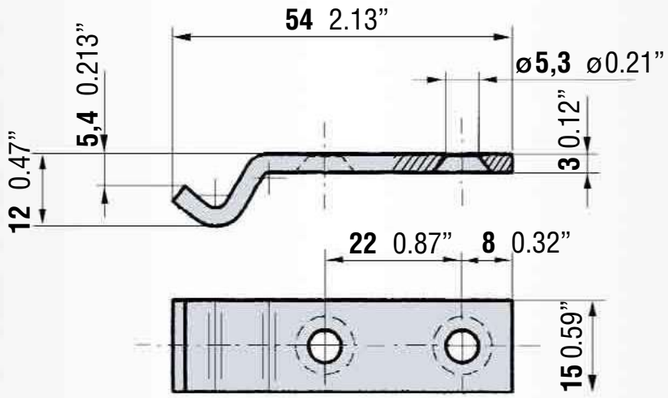

50 C

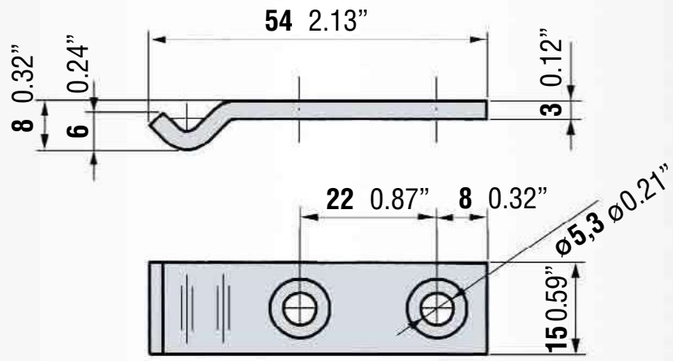

94 B

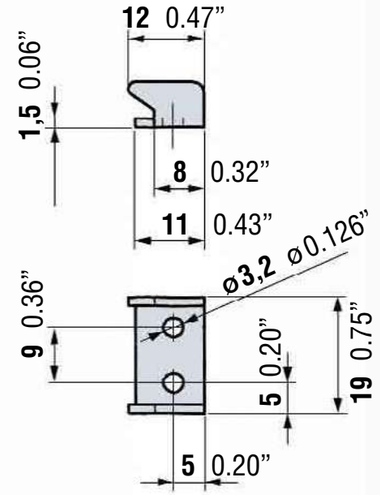

95 C

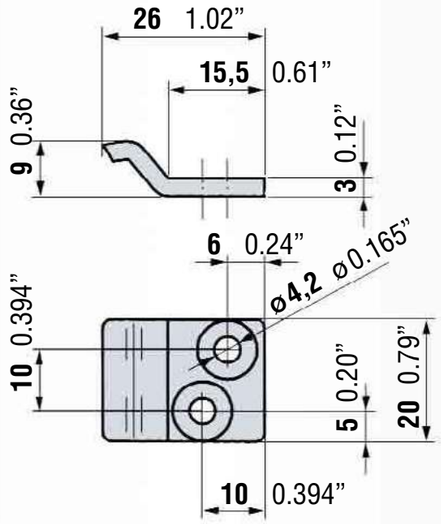

99 C

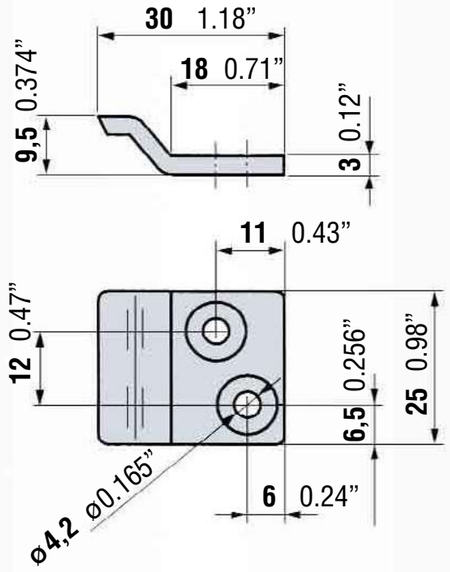

Adapted solutions

703 L/C
With special canopy hook

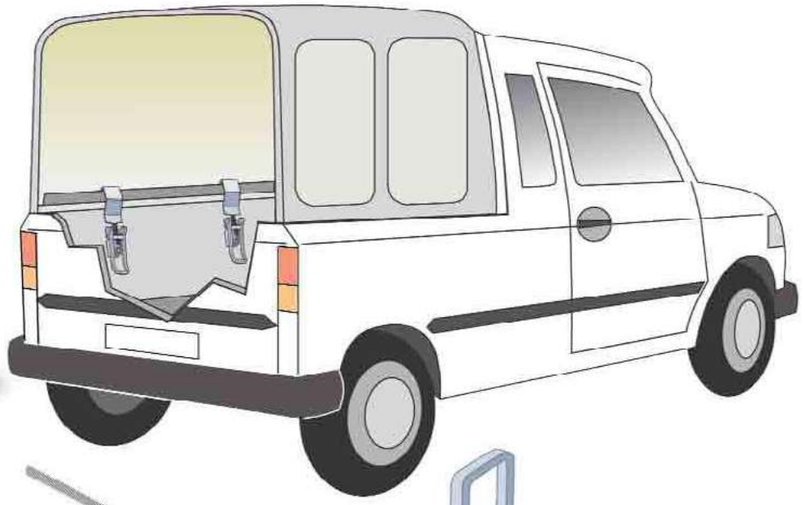

703 C
Clutch Lever

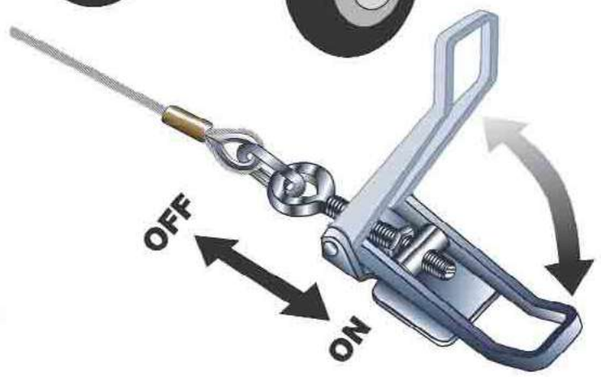

702 A
With slot for nylon band

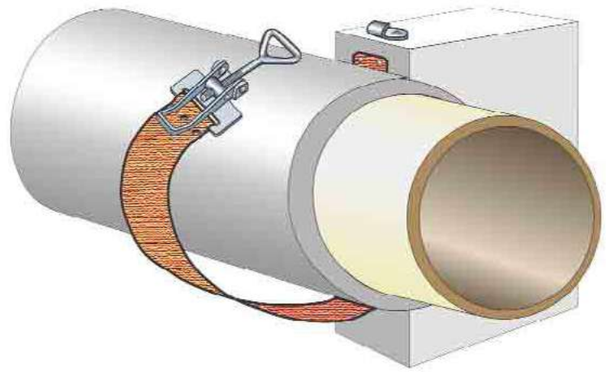

701 S/A + 30 A
Cable ladder clip

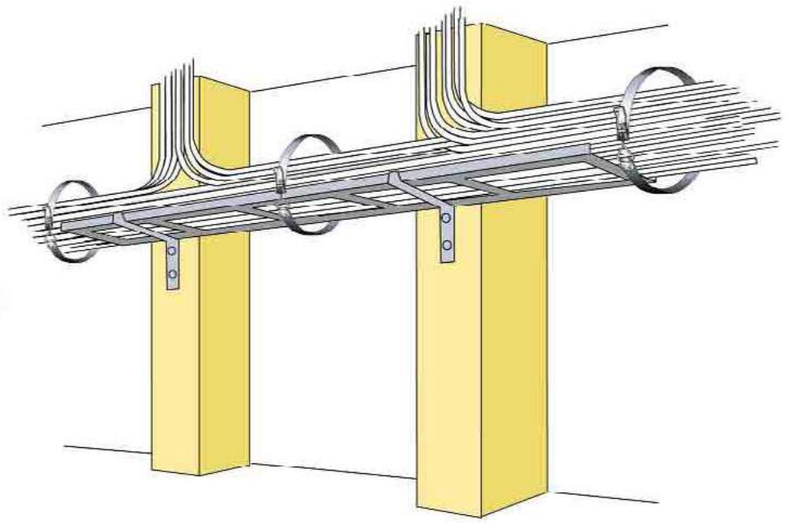

LATCH SERIES

The circular movement of the control lever is transformed into linear movement of the rod. This series is mostly used to fasten hinged lids and for containers. Available with forces from 160 to 1000 daN, and in the heavy series from 1700 to 4000 daN. The push bars can be adjusted within the stroke (height D). The main features of the different models are:

FOR T - TF – TL – TFL - T2 MODELS: • Support base parallel to the force line of action. • In the closed position, the control lever is parallel to the support base.

FOR T3 MODELS: • Support base perpendicular to the force line of action. • In the closed position, the control lever is parallel to the support base.

FOR T4 MODELS: • Support base perpendicular to the force line of action. • In the closed position, the control lever is perpendicular to the support base.

FOR T5 – T6 MODELS: • If the tool must be used on machines or with applications in the presence of strong stress or vibrations, in which an accidental and undesired opening is likely, it is necessary to ensure a secure grip by means of a latch.

NEW LATCH SERIES

www.metalika-kacin.com

Available also in stainless steel

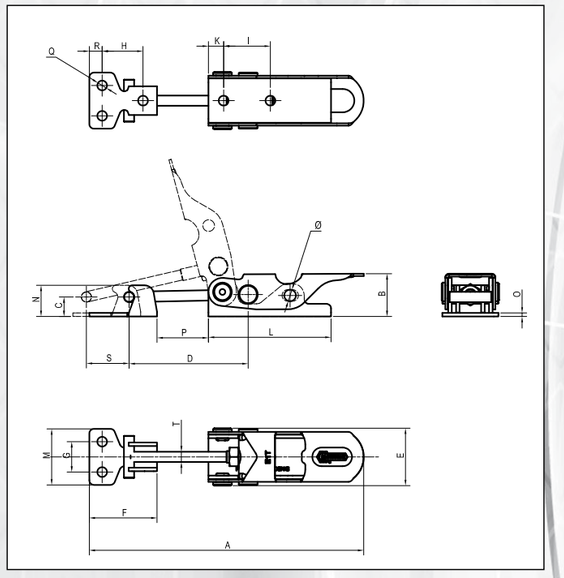

ET SERIES

Code	Descr.	Stainless steel Code	Stainless steel	A	B	C	D	E	F	G	H	I	K	L	M	N	O	P	Q	R	S	T	Diam.	F (daN)	gr.
AE1020	E1T	**ES1020**	E1TX	117,5	18	8,3	51-58	25	29	13	17,5	20	6,5	52,5	24	13,3	1,5	22-29	4,2	5,5	18	M5	5	100	61
AE2020	E2T	**ES2020**	E2TX	155,5	25	10	64-75	30,8	42	15	24	24,5	8	65	32	16,4	2	28-39	5,2	10	25	M6	6	200	135
AE3020	E3T	**ES3020**	E3TX	189,5	32	12,7	79,5-92	35,8	52	20	29,5	30	11	81,5	38	20,7	2,5	33-45,5	6,5	12,5	30,5	M8	8	300	256

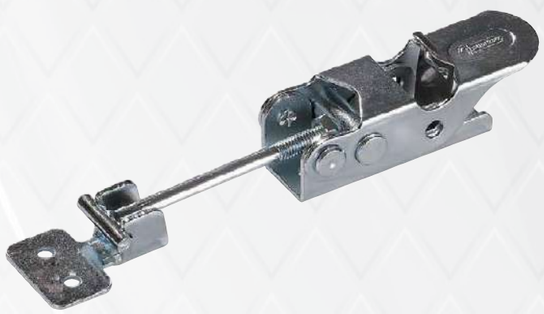

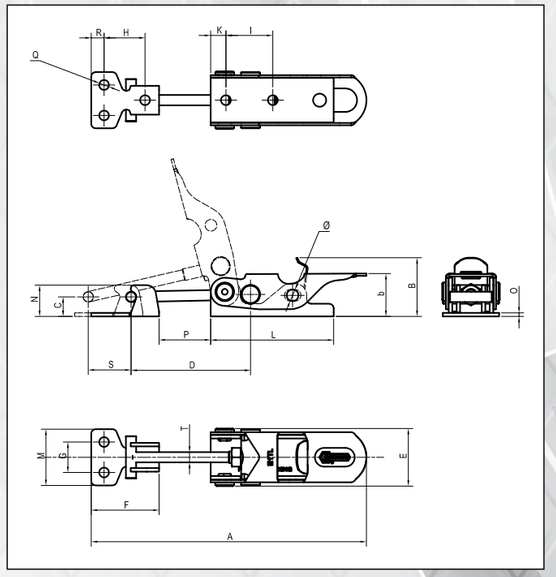

ETL SERIES

Code	Descr.	Stainless steel Code	Stainless steel	A	b	B	C	D	E	F	G	H	I	K	L	M	N	O	P	Q	R	S	T	Diam.	F (daN)	gr.
AE1120	E1TL	**ES1120**	E1TLX	117,5	18	25	8,3	51-58	25	29	13	17,5	20	6,5	52,5	24	13,3	1,5	22-29	4,2	5,5	18	M5	5	100	62
AE2120	E2TL	**ES2120**	E2TLX	155,5	25	33	10	64-75	30,8	42	15	24	24,5	8	65	32	16,4	2	28-39	5,2	10	25	M6	6	200	136
AE3120	E3TL	**ES3120**	E3TLX	189,5	32	41,5	12,7	79,5-92	35,8	52	20	29,5	30	11	81,5	38	20,7	2,5	33-45,5	6,5	12,5	30,5	M8	8	300	258

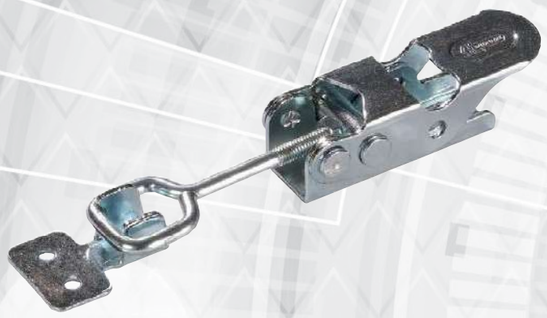

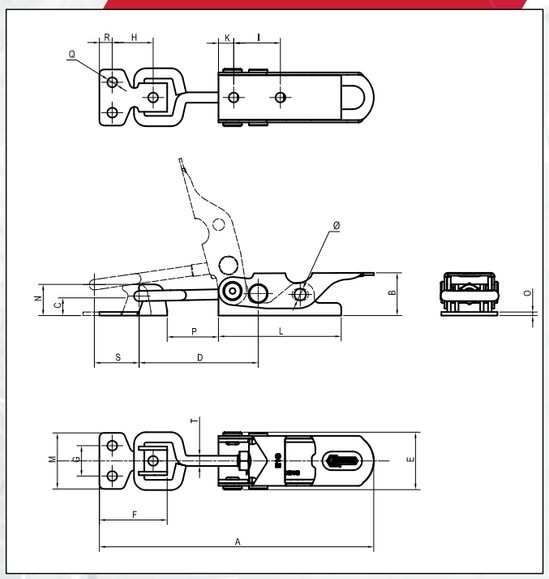

EG SERIES

Code	Descr.	Stainless steel Code	Stainless steel	A	B	C	D	E	F	G	H	I	K	L	M	N	O	P	Q	R	S	T	Diam.	F (daN)	gr.
AE1010	E1G	**ES1010**	E1GX	117,5	18	8,3	51-58	25	29	13	17,5	20	6,5	52,5	24	13,3	1,5	22-29	4,2	5,5	19	M5	5	100	63
AE2010	E2G	**ES2010**	E2GX	155,5	25	10	64-75	30,8	42	15	24	24,5	8	65	32	16,4	2	28-39	5,2	10	26	M6	6	200	142
AE3010	E3G	**ES3010**	E3GX	189,5	32	12,7	79,5-92	35,8	52	20	29,5	30	11	81,5	38	20,7	2,5	33-45,5	6,5	12,5	31	M8	8	300	270

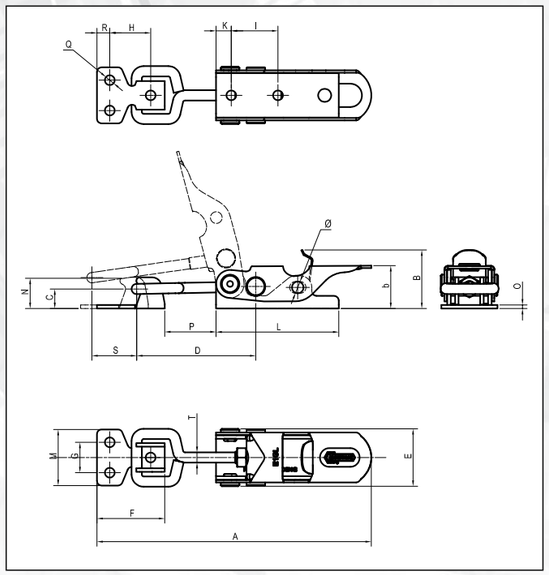

EGL SERIES

Code	Descr.	Stainless steel Code	Stainless steel	A	b	B	C	D	E	F	G	H	I	K	L	M	N	O	P	Q	R	S	T	Diam.	F (daN)	gr.
AE1110	E1GL	**ES1110**	E1GLX	117,5	18	25	8,3	51-58	25	29	13	17,5	20	6,5	52,5	24	13,3	1,5	22-29	4,2	5,5	19	M5	5	100	65
AE2110	E2GL	**ES2110**	E2GLX	155,5	25	33	10	64-75	30,8	42	15	24	24,5	8	65	32	16,4	2	28-39	5,2	10	26	M6	6	200	143
AE3110	E3GL	**ES3110**	E3GLX	189,5	32	41,5	12,7	79,5-92	35,8	52	20	29,5	30	11	81,5	38	20,7	2,5	33-45,5	6,5	12,5	31	M8	8	300	273

LATCH SERIES

T – TF ROD SERIES (LIGHT PERFORMANCE)

Material: Zinc coated plates
Riveted pivots and rod: Galvanized steel
Handles: Red polyurethane resistant to oils, grease and other chemical agents.
Performance:
Form T is supplied with a pivot for traction;
Form TF is supplied with a coupling hook for traction
Features and applications:
The tools of this series ensure a perfect closing of lids.
The position of the threaded rod can be adjusted within a certain range (see dimension "D") to meet the requirements of use.
A special grease is placed between two contacting surfaces during assembly.

FORM
T

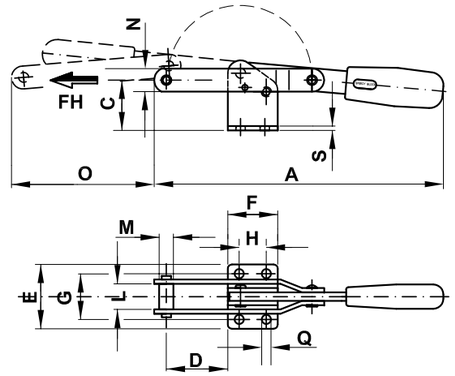

FORM
TF

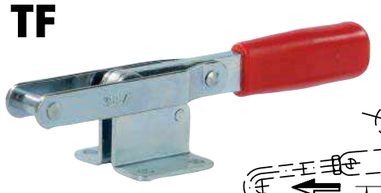

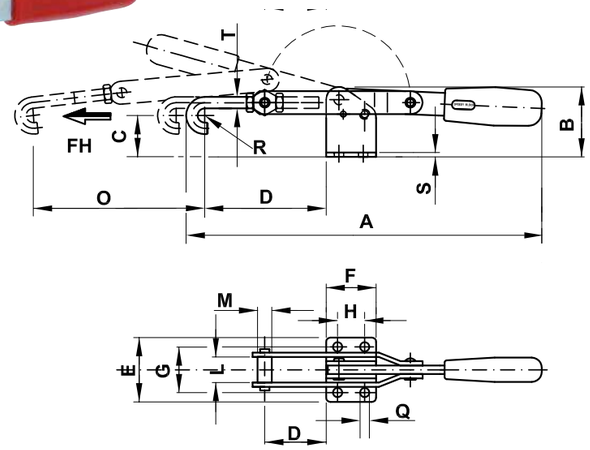

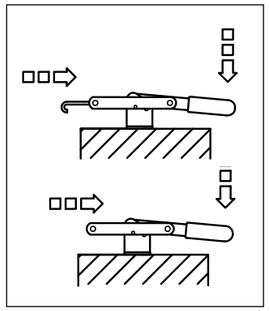

Code	Description	A	B	C	D	E	F	G	H	L	M	N	O	Q	R	S	T	Fh (daN)	gr.
AL200	200/T	203	49	37	43	45	35	32	19	18	10	16	100	6.5		3		200	300
AL205	200/TF	250	49	29	85-105	45	35	32	19			16	100	6.5	5	3	M8	200	380
AL300	300/T	226	49	35	43	60	48	45	32	21	10	18	104	8.5		3		300	460
AL305	300/TF	305	49	25	90-120	60	48	45	32			18	104	8.5	6	3	M10	300	560
AL400	400/T	278	60.5	43	45.5	84	54	60.5	28.5	26	14	25	160	10.5		5		400	1000
AL405	400/TF	343	60.5	30	105-135	84	54	60.5	28.5	26		25	160	10.5	7	5	M12	400	1200

FORM T

PATENT PENDING

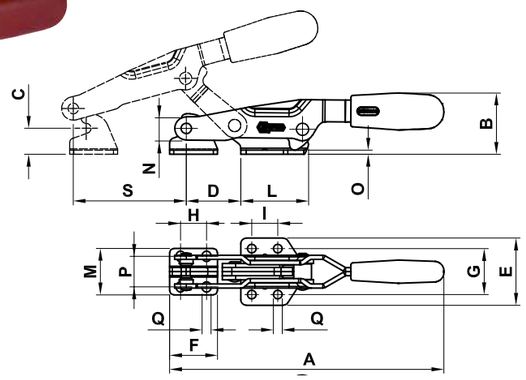

T – TF ROD SERIES (LIGHT PERFORMANCE)

The sizes of this series are also produced in stainless steel and are shown below in red.
Material: Galvanized sheet metal or **AISI 304 stainless steel**
Riveted pivots and rod: Galvanized steel or **AISI 304 stainless steel**
Handles: Red polyurethane resistant to oils, grease and other chemical agents.
Performance:
Form T and **form TX** is supplied with a pivot for traction and a hooking bracket;
Form TF and **form TFX** it is possible to choose from three different optional rods (to be ordered separately):
Eye bolt rod "TG", T-shaped rod "TT", Hook Rod "U" (See page 47).

Features and applications:
The tools of this series ensure a perfect closing of lids.
The position of the threaded rod can be adjusted within a certain range (see drawing) to meet the requirements of use.
A special grease is placed between two contacting surfaces during assembly

FORM TF

PATENT PENDING

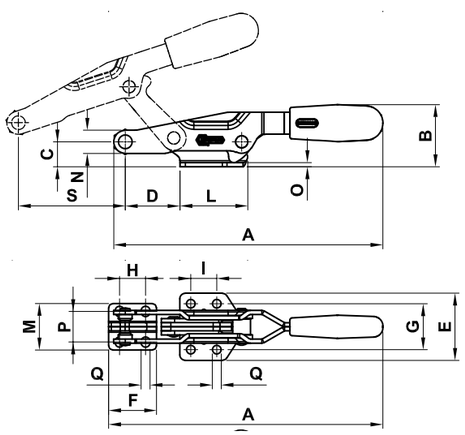

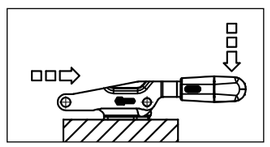

Code	Description	Stainless steel Code	Stainless steel	A	B	C	D	E	F	G	H	I	L	M	N	O	P	Q	S	Fh (daN)	gr.
AL410	33/T	**AS430**	33/TX	200	45	19	40	49	35	33.5	19	19	50	34	17	3	22.3	6.5	83	500	422
AL415	33/TF	**AS532**	33/TFX	197	45	19	40	49		33.5		19	50		17	3		6.5	83	500	394
AL420	43/T	**AS436**	43/TX	248	56	28	51	63	50	45	31	32	61	41	20	4	25.4	8.5	110	1000	811
AL425	43/TF	**AS438**	43/TFX	242	56	28	51	63		45		32	61		20	4		8.5	90	1000	696

TL – TFL ROD SERIES WITH SAFETY LEVER (LIGHT PERFORMANCE)

The sizes of this series are also produced in stainless steel and are shown below in red.
Material: Galvanized sheet metal or **AISI 304 stainless steel**
Riveted pivots and rod: Galvanized steel or **AISI 304 stainless steel**
Handles: Red polyurethane resistant to oils, grease and other chemical agents.
Performance:
Form TL and **form TLX** is supplied with a pivot for traction and a hooking bracket;
Form TFL and **form TFLX** it is possible to choose from three different optional rods (to be ordered separately):
Eye bolt rod "TG", T-shaped rod "TT", Hook Rod "U" (see Page 47).

Features and applications:
The tools of this series ensure a perfect closing of lids.
The position of the threaded rod can be adjusted within a certain range (see drawing) to meet the requirements of use.

FORM TL

PATENT PENDING

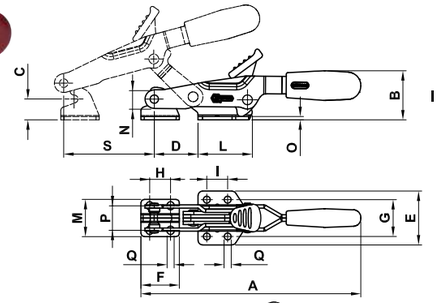

FORM TFL

PATENT PENDING

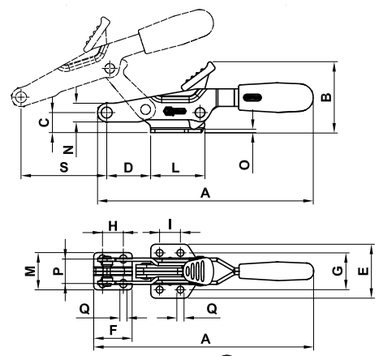

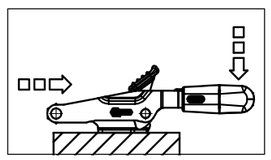

Code	Description	Stainless steel Code	Stainless steel	A	B	C	D	E	F	G	H	I	L	M	N	O	P	Q	S	Fh (daN)	gr.
AL430	33/TL	**AS440**	33/TLX	200	65	19	40	49	35	33.5	19	19	50	34	17	3	22.3	6.5	83	500	441
AL435	33/TFL	**AS442**	33/TFLX	197	65	19	40	49		33.5		19	50		17	3		6.5	83	500	413
AL440	43/TL	**AS444**	43/TLX	248	74	28	51	63	50	45	31	32	61	41	20	4	25.4	8.5	110	1000	834
AL445	43/TFL	**AS446**	43/TFLX	242	74	28	51	63		45		32	61		20	4		8.5	90	1000	719

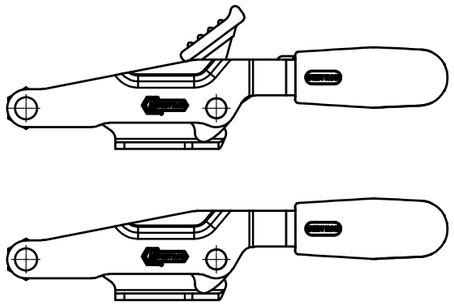

TU Hook rod

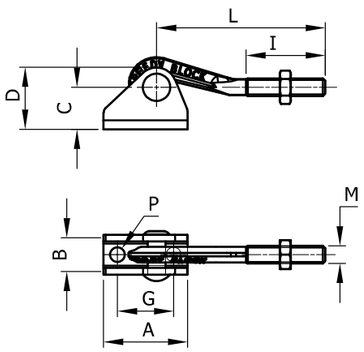

TT T-shaped rod

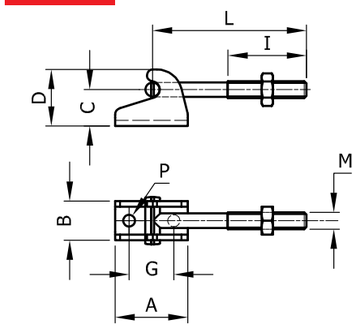

TG Eye bolt rod

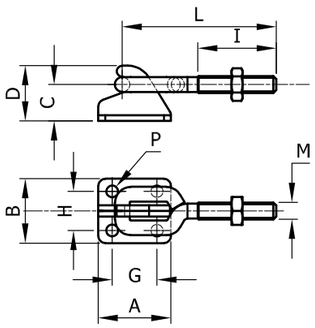

Code	Description	Stainless steel Code	Stainless steel	A	B	C	D	G	H	I	L	M	P
AU544	33/TG	AU556	33/TGX	35	34	19	30	19	22.3	34	76.5	M8	6.7
AU546	43/TG	AU558	43/TGX	50	41	28	40.5	31	25.4	42	95.5	M10	8.5

Code	Description	Stainless steel Code	Stainless steel	A	B	C	D	G	I	L	M	P
AU548	33/TU	AU560	33/TUX	38	18	19	28	25.4	34	76.5	M8	6.7
AU550	43/TU	AU562	43/TUX	50	26	28	39	31	43	93	M10	8.5

Code	Description	Stainless steel Code	Stainless steel	A	B	C	D	G	I	L	M	P
AU552	33/TT	AU564	33/TTX	35	18	19	30	19	34	76.5	M8	6.7
AU554	43/TT	AU566	43/TTX	50	26	28	40.5	31	43	93	M10	8.5

DOUBLE ROD SERIES (LIGHT PERFORMANCE).

The sizes of this series are also produced in stainless steel and are shown below in red.
Material: Galvanized steel or **AISI 304 stainless steel**
Riveted pivots and rod: Galvanized steel or **AISI 304 stainless steel**
Swinging pivot: Galvanized steel or **AISI 303 stainless steel**
Handles: Red polyurethane resistant to oils, grease and other chemical agents.
Performance: The tool comes with a double bar with hooking bracket and nuts.
In addition to the standard length of the U rods, a variety of other lengths are given on page 55.
Therefore, when ordering, indicate:
T2 or T2X = Tool with Standard Double Threaded Rod and hooking bracket
T20 or T20X = Tool without double Threaded rod, which is to be ordered separately (see page 55)
Features and applications: The tools of this series ensure a perfect closing of lids.
The support base is perpendicular to the force line of action.
In the closed position, the control lever is parallel to the support base.
A special grease is placed between two contacting surfaces during assembly.

FORM T2

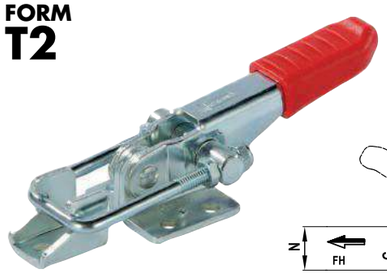

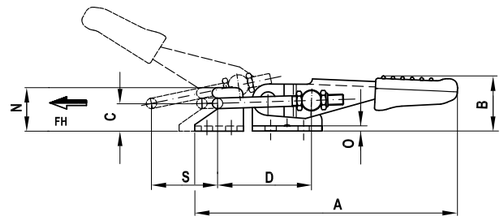

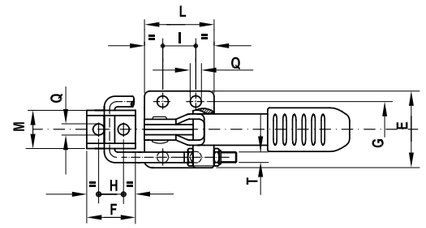

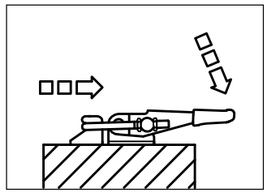

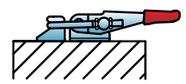

T2-T2X

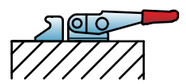

T20-T20X

Code	Description	Stainless steel Code	Stainless steel	A	B	C	D	E	F	G	H	I	L	M	N	O	Q	S	T	Fh (daN)	gr.
AL500	160/T2	AS500	160/T2X	98	25	12	35-44	28	20	19	10	16	26	14	18	2	4.3	25	M4	160	85
AL505	320/T2	AS505	320/T2X	152	30	16	54-63	44	28	32	14.3	19	40	22	25	3	6.5	48	M6	320	250
AL510	700/T2	AS510	700/T2X	220	42	24	70-90	54	38	38	19	41.5	60	26	36	3.5	8.5	58	M8	750	600

FORM T2

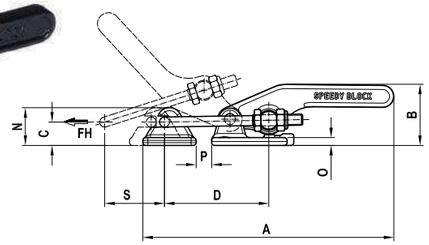

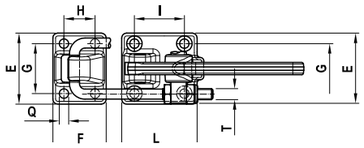

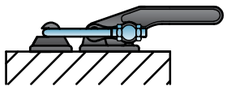

T2-T2X

T20-T20X

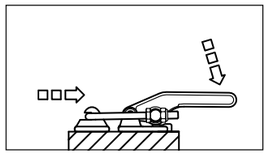

FORM T2S

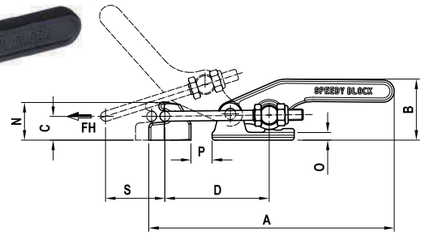

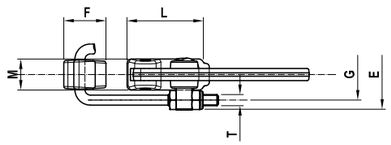

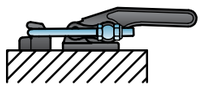

T2S-T2SX

T2S0-T2S0X

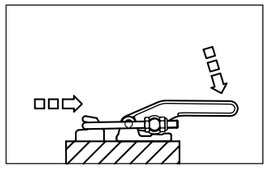

DOUBLE AND WELDABLE DOUBLE ROD SERIES (HEAVY PERFORMANCE)

The sizes of this series are also produced in stainless steel and are shown below in red.
Material: Hot-stamped, weldable, black varnished steel or **hot-stamped AISI 304 stainless steel**.
Pivot: Hardened, ground and knurled steel to prevent rotation.
Bar, swinging pivot and nuts: Galvanized steel or **AISI 303 stainless steel**
Performance:
Form T2 Hot-stamped black varnished steel or **hot-stamped AISI 304 stainless steel**
Form T2S Hot-stamped and phosphated stainless steel or **hot-stamped AISI 304 stainless steel**
The tool comes with a double bar with hooking bracket and nuts.

In addition to the standard length of the U rods, a variety of other lengths are given on page 55.
Therefore, when ordering, indicate:
T2-T2S or T2X-T2SX -= Tool with Standard Double Threaded Rod and hooking bracket
T20-T2S0 or T20X-T2S0X -= Tool without double Threaded rod, which is to be ordered separately
(see page 55)

Features and applications: The tools of this series ensure a good closure of lids. The construction features and the materials chosen give these tools high resistance qualities.
The support base is perpendicular to the force line of action.
In the closed position, the control lever is parallel to the support base.
A special grease is placed between two contacting surfaces during assembly.

Code	Description	Stainless steel Code	Stainless steel	A	B	C	D	E	F	G	H	I	L	N	O	P	Q	S	T	Fh (daN)	FhX (daN)	gr.
AL518	1700/T2	**AS518**	1700/T2X	226	55	21	94-106	64	48	45	28	45	68	34	7	14	8.5	54-58	M10	1700	1400	1085
AL522	4000/T2	**AS522**	4000/T2X	282	68	27	112-124	80	60	57	35	57	85	42	9	14	10.5	62-65	M12	4000	3000	2070

Code	Description	Stainless steel Code	Stainless steel	A	B	C	D	E	F	G	L	M	N	O	P	S	T	Fh (daN)	FhX (daN)	gr.
AL520	1700/T2S	**AS520**	1700/T2SX	221	55	21	94-106	64	38	46	68	26.5	34.5	7	19	54-58	M10	1700	1400	1085
AL524	4000/T2S	**AS524**	4000/T2SX	277	68	27	102-124	80	50	55	85	32	43	9	19	62-65	M12	4000	3000	2070

DOUBLE ROD WITH SAFETY LEVER SERIES (LIGHT PERFORMANCE)

The sizes of this series are also produced in **Stainless Steel 316** and are shown below in red.
Material: Galvanized steel or **AISI 316 stainless steel**
Rivets and rods: Galvanized steel or **AISI 316 stainless steel**
Swinging pivot: Galvanized steel or **AISI 316 stainless steel**
Handles: Red polyurethane resistant to oils, grease and other chemical agents.
Performance: The tool comes with a double bar with hooking bracket and nuts.

In addition to the standard length of the U rods, a variety of other lengths are given on page 55.
T6 or T16 = Tool with Standard Double Threaded Rod and hooking bracket
T60 or T160X = Tool without double Threaded rod, which is to be ordered separately (see page 55)

Features and applications:
The main feature of this series is the special safety lever with the purpose of preventing any accidental openings caused by vibrations. The tools of this series ensure a perfect closing of lids. The support base is perpendicular to the force line of action. In the closed position, the control lever is parallel to the support base. A special grease is placed between two contacting surfaces during assembly.

FORM T6

PATENT PENDING

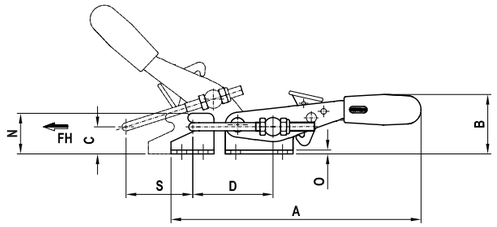

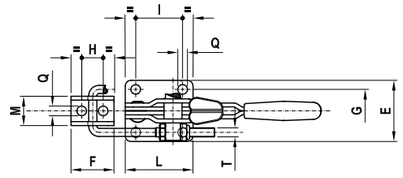

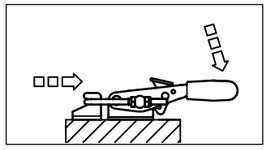

T6-T16

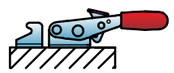

T60-T160

Code	Description	Stainless steel Code	316 stainless steel	A	B	C	D	E	F	G	H	I	L	M	N	O	Q	S	T	Fh (Dan)	gr.	gr. stainless steel
AL780	160/T6	**AS600**	160/T16	101	31	12	35-44	28	20	19	10	16	26	14	18	2	4.3	25	M4	160	92	95
AL785	320/T6	**AS605**	320/T16	169	45	16	54-63	44	28	32	14.3	19	40	22	25	3	6.5	44	M6	320	307	331
AL790	700/T6	**AS610**	700/T16	221	56	24	70-90	54	38	38	19	41.5	60	26	36	3.5	8.5	58	M8	750	627	644

FORM
T6

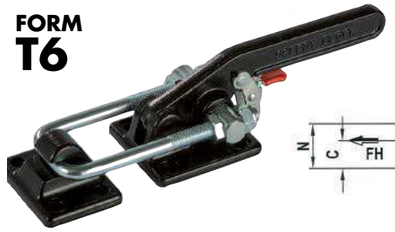

PATENT PENDING

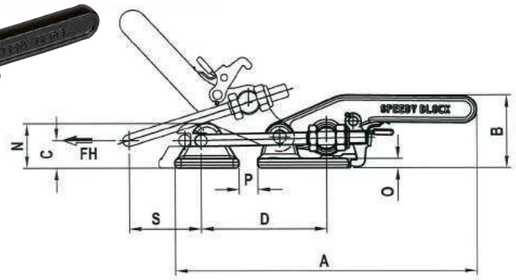

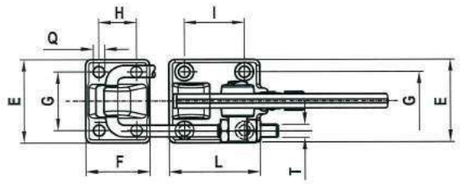

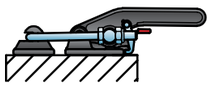

T6-T6X

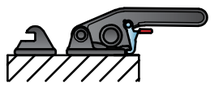

T60-T60X

FORM
T6S

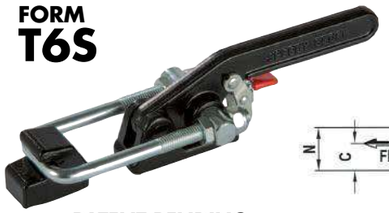

PATENT PENDING

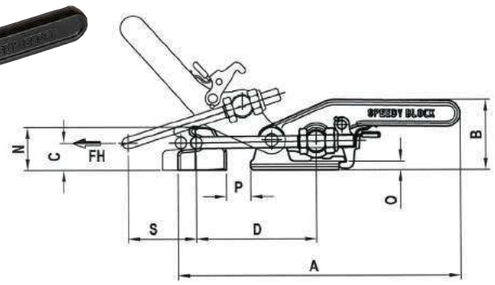

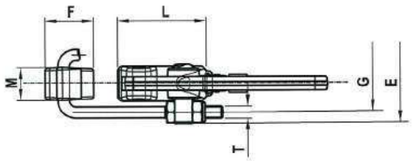

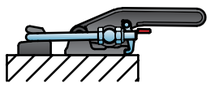

T6S-T6SX

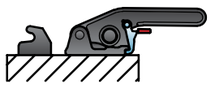

T6S0-T6S0X

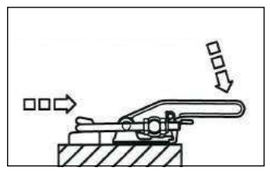

DOUBLE AND WELDABLE DOUBLE ROD WITH SAFETY LEVER SERIES (HEAVY PERFORMANCE)

The sizes of this series are also produced in stainless steel and are shown below in red.
Material: Hot stamped, weldable, black varnished steel or hot stamped **AISI 304** stainless steel.
Pivot: Hardened, ground and knurled steel to prevent rotation.
Bar, swinging pivot and nuts: Galvanized steel or **AISI 303 stainless steel**
Performance: Form T6 hot stamped, black varnished steel or hot stamped **AISI 304** stainless steel.
Form T6S hot stamped, and phosphated steel or hot stamped **AISI 304** stainless steel.
The tool comes with a double bar with hooking bracket and nuts.

In addition to the standard length of the U rods, a variety of other lengths are given on page 55.
Therefore, when ordering, indicate:
T6-T6S or T6X-T6SX = Tool with Standard Double Threaded Rod and hooking bracket
T60-T6SO or T60X-T6S0X = Tool without double Threaded rod, which is to be ordered separately (see page 55).

Features and applications: The tools of this series ensure a perfect closing of lids.
The construction features and materials chosen make these tools highly resistant.
The support base is perpendicular to the force line of action.
In the closed position, the control lever is parallel to the support base.
A special grease is placed between two contacting surfaces during assembly

Code	Description	Stainless steel Code	Stainless steel	A	B	C	D	E	F	G	H	I	L	N	O	P	Q	S	T	Fh (daN)	gr.	gr. stainless steel
AL795	1700/T6	AS615	1700/T6X	226	55	21	94-106	64	48	45	28	45	68	34	7	14	8.5	54-58	M10	1700	1400	1110
AL800	4000/T6	AS620	4000/T6X	282	68	27	112-124	80	60	57	35	57	85	42	9	14	10.5	62-65	M12	4000	3000	2100

Code	Description	Stainless steel Code	Stainless steel	A	B	C	D	E	F	G	L	M	N	O	P	S	T	Fh (daN)	FhX (daN)	gr.
AL805	1700/T6S	AS625	1700/T6SX	221	55	21	94-106	64	38	46	68	26.5	34.5	7	19	54-58	M10	1700	1400	1110
AL810	4000/T6S	AS630	4000/T6SX	277	68	27	112-124	80	50	55	85	32	43	9	19	62-65	M12	4000	3000	2100

DOUBLE ROD SERIES (LIGHT PERFORMANCE)

The sizes of this series are also produced in stainless steel and are shown below in red.
Material: Galvanized steel or **AISI 304 stainless steel**
Riveted pivots and rod: Galvanized steel or **AISI 304 stainless steel**
Swinging pivot: Galvanized steel or **AISI 303 stainless steel**
Handles: Red polyurethane resistant to oils, grease and other chemical agents.
Performance: the tool comes with a double bar with hooking bracket and nuts.
In addition to the standard length of the U rods, a variety of other lengths are given on page 55. Therefore, when ordering, indicate:
T3 or T3X = Tool with Standard Double Threaded Rod and hooking bracket
T30 or T30X = Tool without double Threaded rod, which is to be ordered separately (see page 55)
Features and applications: The tools of this series ensure a perfect closing of lids.
The support base is perpendicular to the force line of action. In the closed position, the control lever is parallel to the support base. A special grease is placed between two contacting surfaces during assembly.

FORM
T3

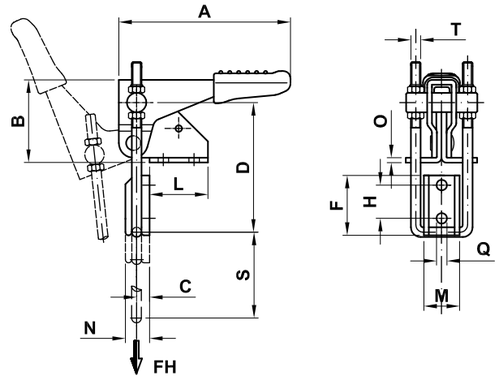

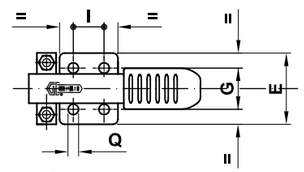

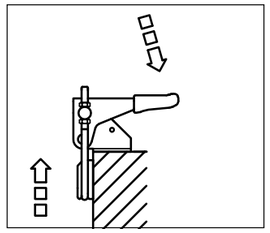

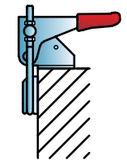

T3-T3X

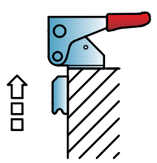

T30-T30X

Code	Description	Stainless steel Code	Stainless steel	A	B	C	D	E	F	G	H	I	L	M	N	O	Q	S	T	Fh (daN)	gr.
AL530	160/T3	AS530	160/T3X	68	36	5	48-58	35	25.5	22	14.3	13	26	14	10	2	4.3	34.5	M4	160	100
AL535	320/T3	AS535	320/T3X	106	52.5	8	75-95	44	37	25.5	20.5	19	36	22	15	3	6.5	53	M6	320	320
AL540	700/T3	AS540	700/T3X	147	66	13	98-122	54	48.5	36.5	27	32	52	26	23	3.5	8.5	64	M8	750	680

FORM T3

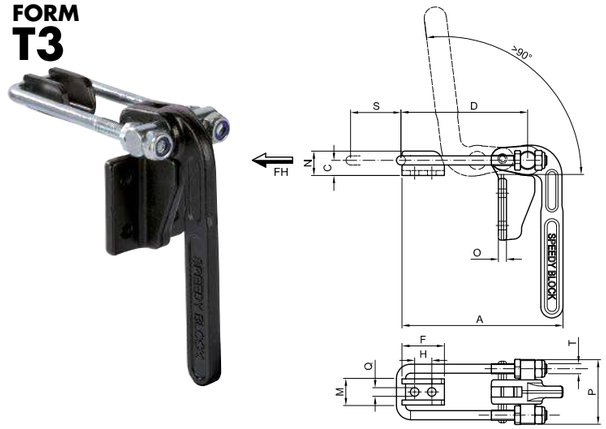

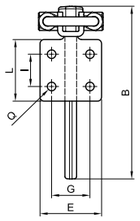

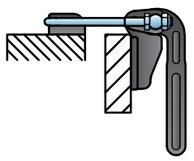

T3

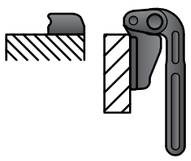

T30

DOUBLE AND WELDABLE DOUBLE ROD SERIES (HEAVY PERFORMANCE)

Material: Hot-stamped, weldable, black varnished steel.
Pivot: Hardened, ground and knurled steel to prevent rotation.
Bar, swinging pivot and nuts: Galvanized steel
Performance: Form T3 Hot-stamped, black varnished steel
Form T3S Hot-stamped and phosphated steel
The tool comes with a double bar with hooking bracket and nuts.

In addition to the standard length of the U rods, a variety of other lengths are given on page 55.
Therefore, when ordering, indicate:
T3-T3S = Tool with Standard Double Threaded Rod and hooking bracket
T30-T3S0 = Tool without double Threaded rod, **which is to be ordered separately** (see page 55)

Features and applications: The tools of this series ensure a perfect closing of lids. The construction features and materials chosen make these tools highly resistant. The support base is perpendicular to the force line of action. In the closed position, the control lever is parallel to the support base.

FORM T3S

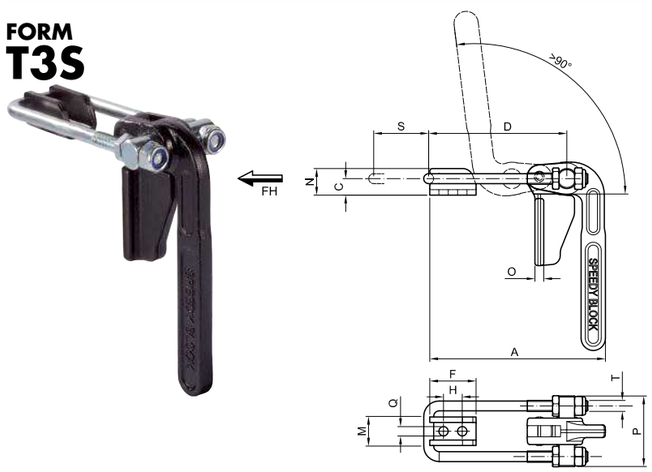

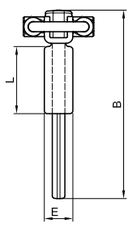

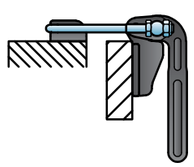

T3S

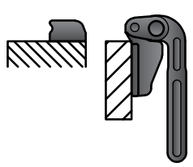

T3S0

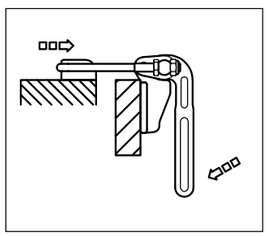

Code	Description	A	B	C	D	E	F	G	H	I	L	M	N	O	P	Q	S	T	Fh (daN)	gr.
AL550	1400/T3	159.5	171	15	104.5-125.5	61	42	38	17	32	61	26	24	8	64	8.5	50	M10	1200	1235

Code	Description	A	B	C	D	E	F	H	L	M	N	O	P	Q	S	T	Fh (daN)	gr.
AL552	1400/T3S	159.5	171	15	104.5-125.5	61	42	17	61	26	24	8	64	8.5	50	M10	1200	1115

DOUBLE ROD SERIES (LIGHT PERFORMANCE)

Material: Galvanized steel
Riveted pivots and rod: Galvanized steel
Swinging pivot: Galvanized steel
Handles: Red polyurethane resistant to oils, grease and other chemical agents.
Performance: The tool comes with a double bar with hooking bracket and nuts.
In addition to the standard length of the U rods, a variety of other lengths are given on page 55.
Therefore, when ordering, indicate:
T4 = Tool with Standard Double Threaded Rod and hooking bracket
T40 = Tool without double Threaded rod, **which is to be ordered separately** (see page 55)

Features and applications: The tools of this series ensure a perfect closing of lids.
The support base is perpendicular to the force line of action.
In the closed position, the control lever is perpendicular to the support base.
A special grease is placed between two contacting surfaces during assembly.

FORM T4

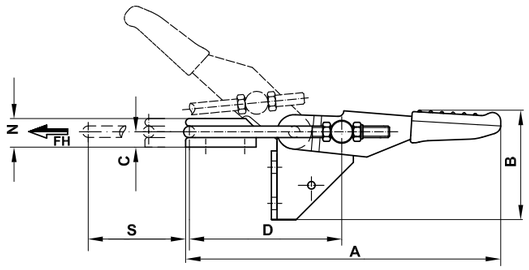

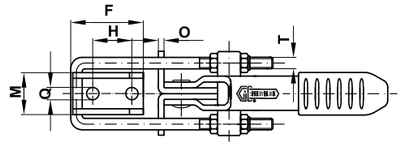

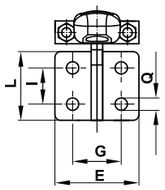

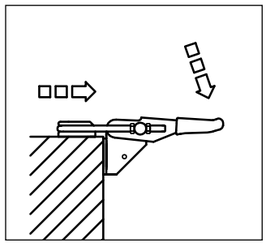

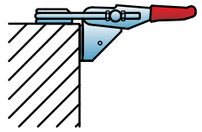

T4

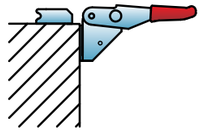

T40

Code	Description	A	B	C	D	E	F	G	H	I	L	M	N	O	Q	S	T	Fh (daN)	gr.
AL560	160/T4	99	40	5	48-58	35	25.5	22	14.3	13	26	14	10	2	4.3	32	M4	160	95
AL565	320/T4	152	57.5	8	75-95	44	37	25.5	20.5	19	36	22	15	3	6.5	53	M6	320	295
AL570	700/T4	225	82	13	98-122	54	48.5	36.5	27	32	52	26	23	3.5	8.5	64	M8	750	655

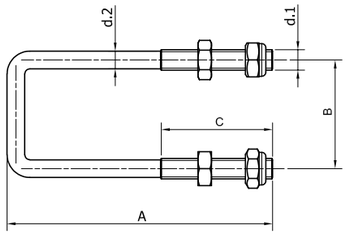

U-SHAPED ACCESSORY FOR LATCH SERIES

Material:
Galvanized steel or **AISI 304 stainless steel**
or **AISI 316 stainless steel**
Performance:
The rod comes complete with 4 nuts.

Rod code	For model	Stainless steel 304 Code	For model	Stainless steel 316 Code	For model	A	B	C	D.1	D.2
AX556	160/T2-T6	**AX570**	160/T2X	**AX604**	160/T16	56.4	21	27.5	M4	3.4
AX557	160/T3-T4	**AX574**	160/T3X			70.4	21	28.5	M4	3.4
AX556-103	160/T20-T30-T40-T60	**AX570-103**	160/T20X-T30X	**AX604-103**	160/T160	103.4	21	30	M4	3.4
AX556-153	160/T20-T30-T40-T60	**AX570-153**	160/T20X-T30X	**AX604-153**	160/T160	153.4	21	35	M4	3.4
AX556-203	160/T20-T30-T40-T60	**AX570-203**	160/T20X-T30X	**AX604-203**	160/T160	203.4	21	35	M4	3.4
AX558	320/T2-T6	**AX572**	320/T2X	**AX606**	320/T16	78.2	32	44	M6	5.2
AX559	320/T3-T4	**AX576**	320/T3X			110.2	32	44	M6	5.2
AX558-130	320/T20-T30-T40-T60	**AX572-130**	320/T20X-T30X	**AX606-130**	320/T160	130.2	32	45	M6	5.2
AX558-155	320/T20-T30-T40-T60	**AX572-155**	320/T20X-T30X	**AX606-155**	320/T160	155.2	32	45	M6	5.2
AX558-205	320/T20-T30-T40-T60	**AX572-205**	320/T20X-T30X	**AX606-205**	320/T160	205.2	32	45	M6	5.2
AX560	700/T2-T6	**AX573**	700/T2X	**AX608**	700/T16	111.2	38	52	M8	7.2
AX563	700/T3-T4	**AX577**	700/T3X			143.2	38	56	M8	7.2
AX560-127	700/T20-T30-T40-T60	**AX573-127**	700/T20X-T30X	**AX608-127**	700/T160	127.2	38	60	M8	7.2
AX560-157	700/T20-T30-T40-T60	**AX573-157**	700/T20X-T30X	**AX608-157**	700/T160	157.2	38	60	M8	7.2
AX560-207	700/T20-T30-T40-T60	**AX573-207**	700/T20X-T30X	**AX608-207**	700/T160	207.2	38	60	M8	7.2

Rod code	For model	Stainless steel 304 Code	For model	A	B	C	D.1	D.2
AX561	1700/T2-T2S-T6-T6S	**AX578**	1700/T2X-T2SX-T6-T6SX	129	46	45	M10	9
AX564	1400/T3-T3S			149	46	55	M10	9
AX561-179	1400/T30-T3S0 1700/T20-T2S0-T60-T6S0	**AX578-179**	1700/T20X-T2S0X-T60X-T6S0X	179	46	45	M10	9
AX561-209	1400/T30-T3S0 1700/T20-T2S0-T60-T6S0	**AX578-209**	1700/T20X-T2S0X-T60X-T6S0X	209	46	45	M10	9
AX561-259	1400/T30-T3S0 1700/T20-T2S0-T60-T6S0	**AX578-259**	1700/T20X-T2S0X-T60X-T6S0X	259	46	45	M10	9
AX565	1510/T2-T2S			179	52	70	M10	8.9
AX562	4000/T2-T2S-T6-T6S	**AX580**	4000/T2X	150.8	55	70	M12	10.8
AX562-211	4000/T20-T2S0-T60-T6S0	**AX580-211**	4000/T20X-T2S0X-T60X-T6S0X	210.8	55	70	M12	10.8
AX562-361	4000/T20-T2S0-T60-T6S0	**AX580-361**	4000/T20X-T2S0X-T60X-T6S0X	360.8	55	70	M12	10.8
AX562-421	4000/T20-T2S0-T60-T6S0	**AX580-421**	4000/T20X-T2S0X-T60X-T6S0X	420.8	55	70	M12	10.8

T5 ROD SERIES WITH SAFETY LEVER (LIGHT PERFORMANCE)

The sizes of this series are also produced in stainless steel and are shown below in red.
Material: Parts made of phosphated sheet metal and riveted pivots made of galvanized steel or **AISI 304 stainless steel**.
Turned parts made of galvanized steel or **AISI 303 stainless steel**.
Handles: Red polyurethane resistant to oils, grease and other chemical agents.
Rod: Phosphated steel or **AISI 304 stainless steel** to be ordered separately.
Features and applications: The tool can be opened with only one hand, disengage the working surface (the clamping lever opens by itself) and close it again for the next operation; you can choose from three different optional tie rods (to be ordered separately):
Eye bolt rod "TG", T-shaped rod "TT", Hook Rod "TU".
The construction features and materials chosen make these tools highly resistant.
The support base is perpendicular to the force line of action.
In the closed position, the control lever is parallel to the support base.
A special grease is placed between two contacting surfaces during assembly.

FORM
T5

PATENTED

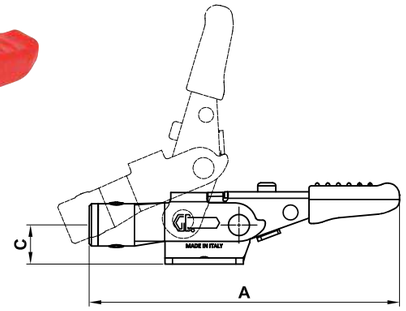

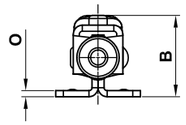

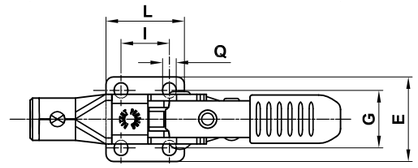

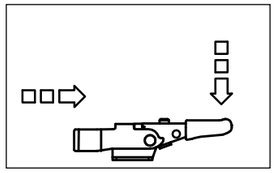

Code	Description	Stainless steel Code	Stainless steel	A	B	C	E	G	I	L	O	Q	Fh (Dan)	gr.
AL575	160/T5	**AS545**	160/T5X	103	26.8	13	28	19	16	26	2	4.5	175	100
AL580	320/T5	**AS550**	320/T5X	153	38.5	19	44	32	19	40	3	6.7	400	295
AL585	700/T5	**AS555**	700/T5X	222	53	28	54	38.1	41.5	60	3.5	8.5	750	690

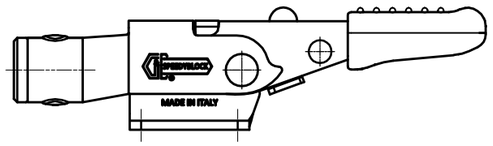

TT T-shaped rod

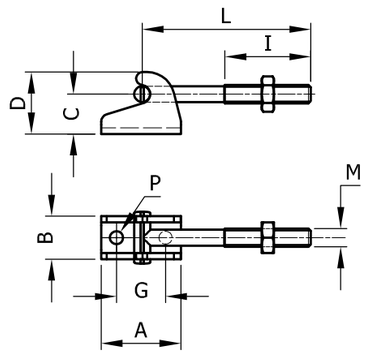

TU Hook rod

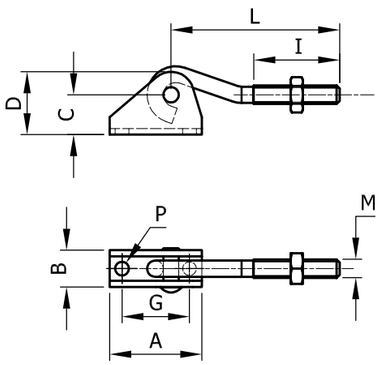

TG Eye bolt rod

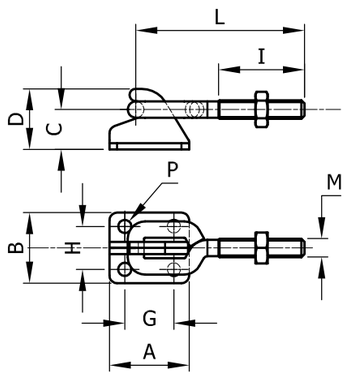

Code	Description	Stainless steel Code	Stainless steel	A	B	C	D	G	H	I	L	M	P
AU400	160/TG	**AU420**	160/TGX	26	23	13	19.8	16	14.30	28	55.5	M6	4.5
AU406	320/TG	**AU426**	320/TGX	35	34	19	30	19	22.30	34	76.5	M8	6.7
AU412	700/TG	**AU432**	700/TGX	50	41	28	40.5	31	25.40	42	95.5	M10	8.5
Code	**Description**	**Stainless steel Code**	**Stainless steel**	**A**	**B**	**C**	**D**	**G**	**I**	**L**	**M**	**P**	
AU402	160/TU	**AU422**	160/TUX	35	14	13	20.4	25.4	28	54.5	M6	4.5	
AU408	320/TU	**AU428**	320/TUX	38	18	19	28	25.4	34	76.5	M8	6.7	
AU414	700/TU	**AU434**	700/TUX	50	26	28	39	31	43	93	M10	8.5	
Code	**Description**	**Stainless steel Code**	**Stainless steel**	**A**	**B**	**C**	**D**	**G**	**I**	**L**	**M**	**P**	
AU404	160/TT	**AU424**	160/TTX	26	14	13	20	16	28	55	M6	4.5	
AU410	320/TT	**AU430**	320/TTX	35	18	19	30	19	34	76.5	M8	6.7	
AU416	700/TT	**AU436**	700/TTX	50	26	28	40.5	31	43	93	M10	8.5	

T5 ROD SERIES WITH SAFETY LEVER (HEAVY PERFORMANCE)

Material: Parts made of sheet metal and phosphated riveted pivots
Turned parts made of phosphated steel
Handles: Red polyurethane resistant to oils, grease and other chemical agents.
Performance: The tool comes with an eye bolt bar and hooking bracket.
Features and applications: The tool can be opened with only one hand, disengage the working surface (the clamping lever opens by itself) and close it again for the next operation.
The construction features and materials chosen make these tools highly resistant.
The support base is perpendicular to the force line of action.
In the closed position, the control lever is parallel to the support base.
A special grease is placed between two contacting surfaces during assembly.

FORM T5

PATENTED

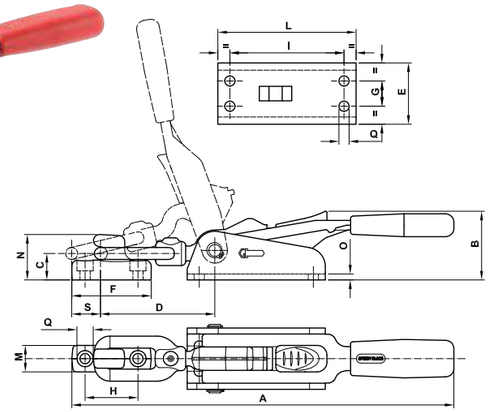

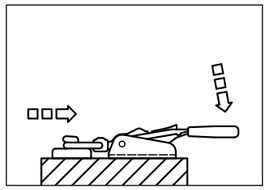

Code	Description	A	B	C	D	E	F	G	H	I	L	M	N	O	Q	S	Fh (daN)	gr.
AL590	1400/T5	318	57	22	95-105	51	66	21	44	95	115	22	38	5	8.5	24	1500	1600

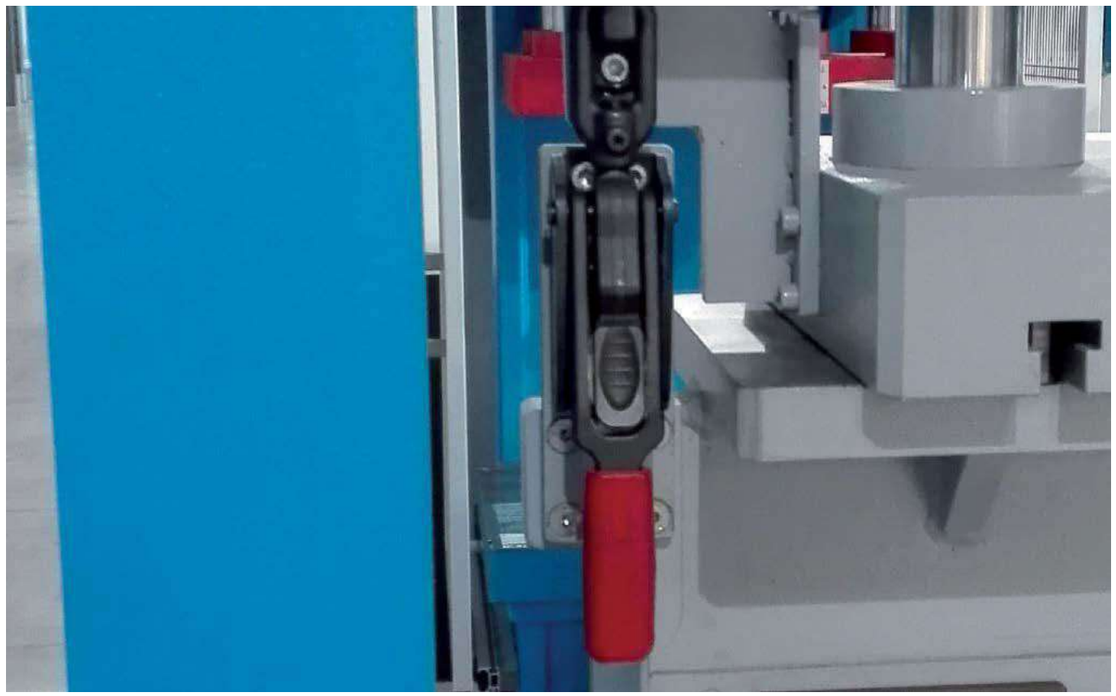

Serie PE2.45.

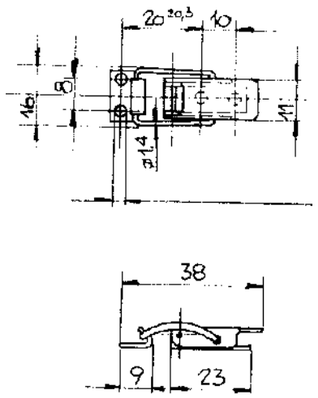

Artikel-Nr. : Part No.:	Material/Oberfläche: Material/Finish:
PE2.45.00.04/6	Stahl / verzinkt Steel / zinc-plated

- Max. tensile strength 300 N

Gegenhaken / Strike

Artikel-Nr. : Part No.:	Material/Oberfläche: Material/Finish:
PE2.44.00.04/5	Stahl / verzinkt Steel / zinc-plated

Toggles latches
Standard toggle latches

Serie PE2.46.

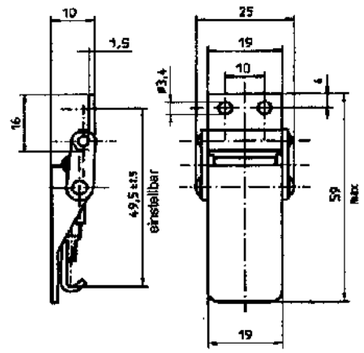

Artikel-Nr. : Part No.:	Material/Oberfläche: Material/Finish:
PE2.46.00.04/6	Stahl / verzinkt Steel / zinc-plated

- Max. tensile strength 1300 N
- Adjustable drawhook

Gegenhaken / Strike

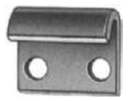

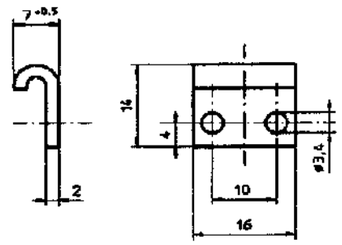

Artikel-Nr. : Part No.:	Material/Oberfläche: Material/Finish:
PE2.46.00.04/5	Stahl / verzinkt Steel / zinc-plated

Einbauanleitung / Installation Instructions

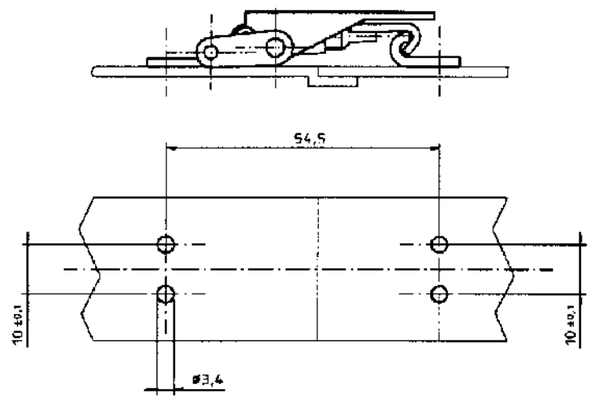

Serie PV934L

- Max. tensile strength 550 N, working load 310 N
- Available with secondary lock

Serie PV934L - Einbauanleitung / Installation Instructions

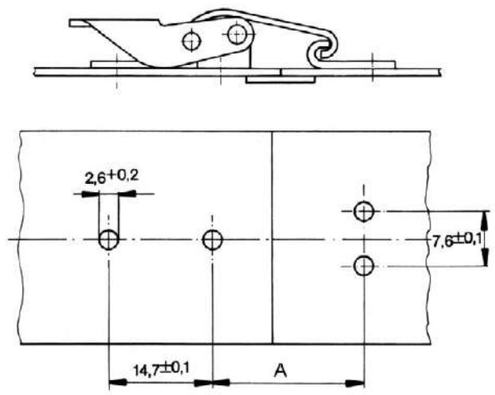

A = min. 23,7 mm; please take into account the application preload and tolerance requirements.

Toggles latches
Standard toggle latches

Serie PV934L

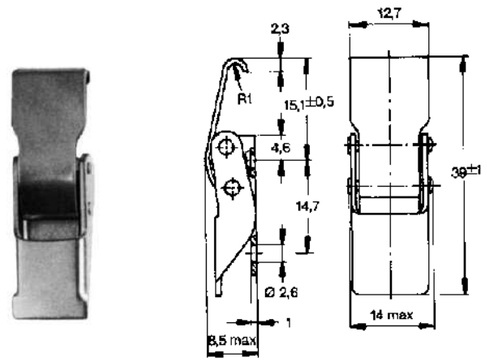

Artikel-Nr. : Part No.:	Material/Oberfläche: Material/Finish:
PV934L01-1-1BP	Stahl / rostfrei Stainless steel

Mit Sicherung
With sec. lock

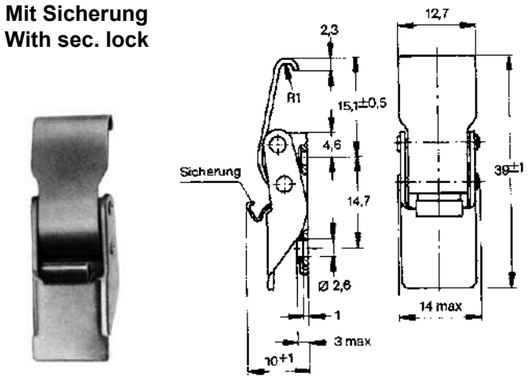

Artikel-Nr. : Part No.:	Material/Oberfläche: Material/Finish:
PV934L01-1X1BP	Stahl / rostfrei Stainless steel

Gegenhaken / Strike

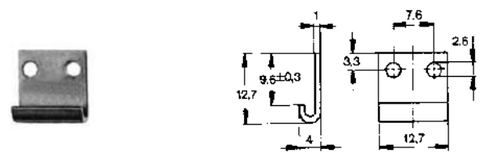

Artikel-Nr. : Part No.:	Material/Oberfläche: Material/Finish:
PV934L02-1BP	Stahl / rostfrei Stainless steel

Serie PV95L

- Zugbelastung max. 445 N, Betriebsbelastung 220 N
- Griffteil deckt alle Innenteile und den Gegenhaken ab
- Toleranzausgleich durch Federbügel im Griffteil
- Niedrige Bauhöhe

- Max. tensile strength 445 N, working load 220 N
- Handle conceals all interior parts and strike
- Self-compensating spring-steel drawhook
- Low profile

Toggles latches
Standard toggle latches

Serie PV95L

Toleranzausgleich durch Federbügel
Self - compensating spring steel drawhook

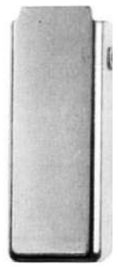

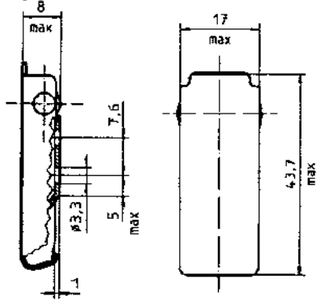

Artikel-Nr. : Part No.:	Material/Oberfläche: Material/Finish:
PV95L07-1-1BC	Stahl / rostfrei Stainless steel
PV95L15-1BD	Stahl / verchromt Innenteile: Stahl / verzinkt, CrVI-frei transparent passiviert Steel / chrome-plated Interior parts: Steel / zinc-plated, CrVI-free transp. pass.

Gegenhaken / Strike

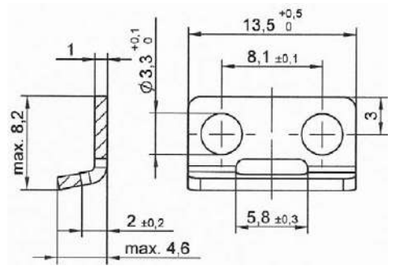

Artikel-Nr. : Part No.:	Material/Oberfläche: Material/Finish:
PV95H07-1-1BP	Stahl / rostfrei Stainless steel

Einbauanleitung / Installation Instructions

Spannverschluss mit Federbügel / Gegenhaken
Spring-steel drawhook tension latch / strike

Anhaltswerte für die Klemmkraft	
L	Klemmkraft ± 50 N
14,7 mm	100 N
14,8 mm	120 N
14,9 mm	180 N
15,0 mm	200 N

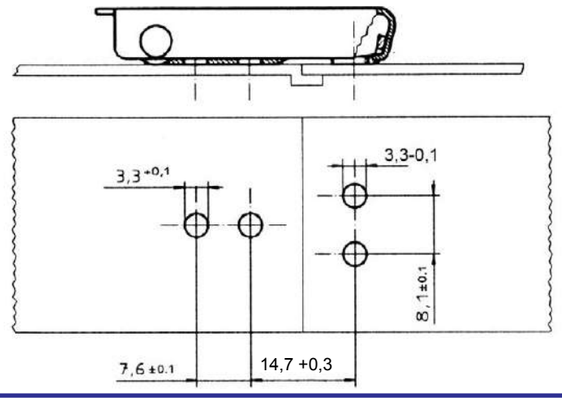

Serie PV96L

- Zugbelastung max. 1000 N, Betriebsbelastung 650 N
- Griffteil deckt alle Innenteile und den Gegenhaken ab
- Toleranzausgleich durch Federpaket im Griffteil
- Niedrige Bauhöhe

- Max. tensile strength 1000 N, working load 650 N
- Handle conceals all interior parts and strike
- Self-compensating spring elements in handle
- Low profile

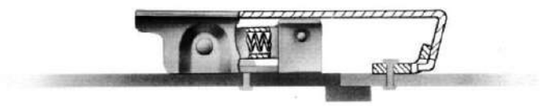

Toggles latches
Standard toggle latches

Serie PV96L

Toleranzausgleich durch Federpaket
Self - compensating spring steel drawhook

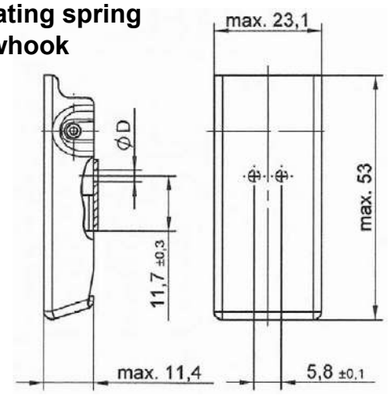

Artikel-Nr. : Part No.:	Material/Oberfläche: Material/Finish:
PV96L01-1-1A0	Stahl / verzinkt, CrVI-frei transp. passiviert Steel / zinc-plated, CrVI-free transp.passivated
PV96L01-1-1AG	Stahl / verchromt Innenteile: Stahl / verzinkt, CrVI-frei transp. passiviert Steel / chrome-plated, Interior parts: Steel / zinc-plated, CrVI-free transp.passivated

Gegenhaken / Strike

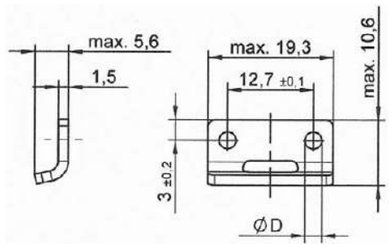

Artikel-Nr. : Part No.:	Material/Oberfläche: Material/Finish:
PV96H01-1-1A0	Stahl / verzinkt, CrVI-frei transp. passiviert Steel / zinc-plated, CrVI-free transp.passivated

Einbauanleitung / Installation Instructions

Anhaltswerte für die Klemmkraft	
L	Klemmkraft ± 10 N
24,6 mm	45 N
25,4 mm	90 N
26,2 mm	110 N
27,0 mm	140 N

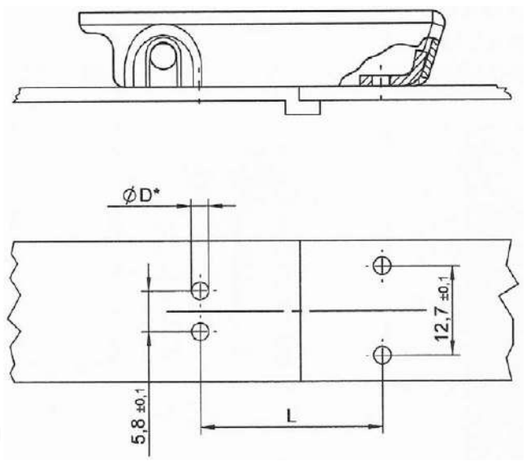

* Loch - Ø entsprechend der gewählten Ausführung
Ø D see selected version

Serie P1429L

- Zugbelastung max. 1.500 N, Betriebslast bis 1.000 N
- Mit Sicherung lieferbar
- Drei verschiedene Spannhaken lieferbar

- Max. tensile strength 1.500 N, working load up to 1.000 N
- Available with secondary lock
- Three different drawhook types available

Toggles latches
Standard toggle latches

Serie P1429L

Mit Spannhaken
With drawhook

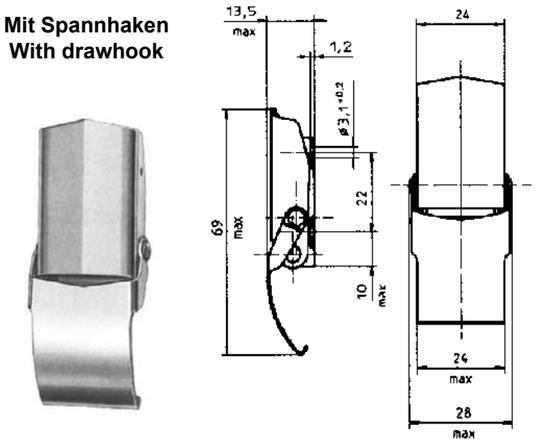

Artikel-Nr. : Part No.:	Material/Oberfläche: Material/Finish:
P1429L02-1-1BP	Stahl / rostfrei Stainless steel

Zugbelastung max. 300 N mit Gegenhaken 1429L8.
Max. tensile strength 300 N with 1429L8 strike.

Mit Spannbügel
With clip

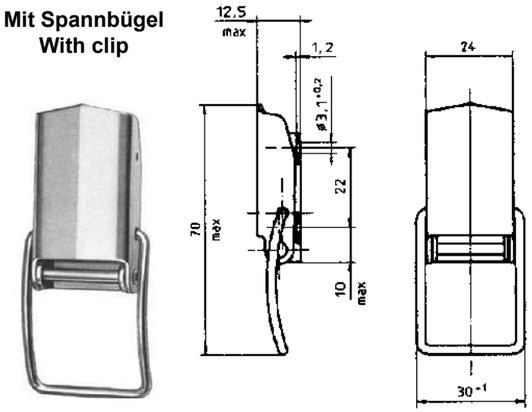

Artikel-Nr. : Part No.:	Material/Oberfläche: Material/Finish:
P1429L02-2-1BP	Stahl / rostfrei Stainless steel

Zugbelastung max.1500 N mit Gegenhaken 1429L9.
Max. tensile strength 1500 N with 1429L9 strike.

Mit gekröpftem
Spannbügel
With bent clip

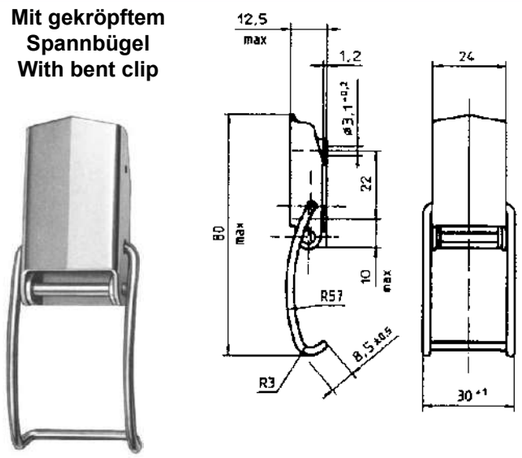

Artikel-Nr. : Part No.:	Material/Oberfläche: Material/Finish:
P1429L02-3-1BP	Stahl / rostfrei Stainless steel

Zugbelastung max.1100 N mit Gegenhaken 1429L9
oder in Verbindung mit angepasster Bauteilkontur.
Max. tensile strength 1100 N with 1429L9 strike
or in conjunction with adapted component contour.

Serie P1429L

Mit Spannhaken und Sicherung
With drawhook and secondary lock

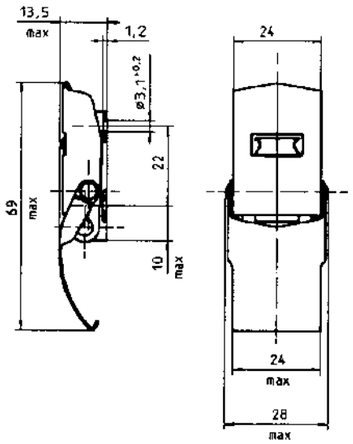

Artikel-Nr. : Part No.:	Material/Oberfläche: Material/Finish:
P1429L02-1X1BP	Stahl / rostfrei Stainless steel

Zugbelastung max. 300 N mit Gegenhaken 1429L8.
Max. tensile strength 300 N with 1429L8 strike.

P1429L02-1X1AG	Stahl / verzinkt, farblos chromatiert Steel, zinc-plated, CrVI-free, transparent

Zugbelastung max. 450 N mit Gegenhaken 1429L8.
Max. tensile strength 450 N with 1429L8 strike.

Mit Spannbügel und Sicherung
With clip and secondary lock

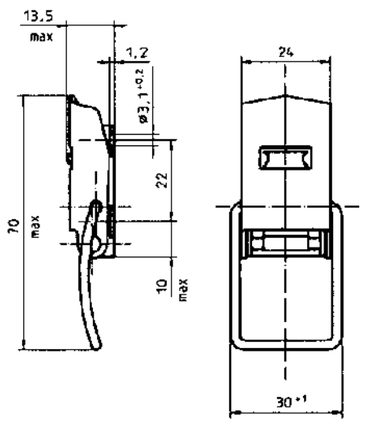

Artikel-Nr. : Part No.:	Material/Oberfläche: Material/Finish:
P1429L02-2X1BP	Stahl / rostfrei Stainless steel

Zugbelastung max.1500 N mit Gegenhaken 1429L9.
Max. tensile strength 1500 N with 1429L9 strike.

Mit gekröpftem Spannbügel und Sicherung
With bent clip and secondary lock

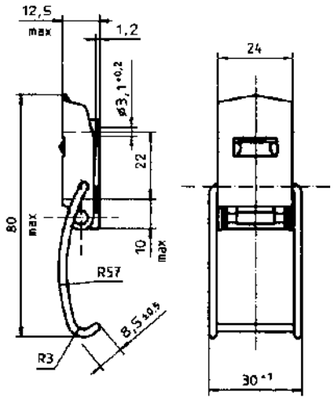

Artikel-Nr. : Part No.:	Material/Oberfläche: Material/Finish:
P1429L02-3X1BP	Stahl / rostfrei Stainless steel

Zugbelastung max.1100 N mit Gegenhaken 1429L9.
Max. tensile strength 1100 N with 1429L9 strike.

Toggles latches
Standard toggle latches

Serie P1429L - Gegenhaken / Strikes

Für Spannhaken
For drawhook

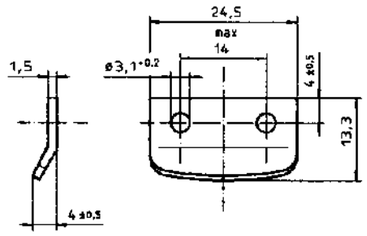

Artikel-Nr. : Part No.:	Material/Oberfläche: Material/Finish:
P1429L8-1BP	Stahl / rostfrei Stainless steel

Für Spannbügel
For clip

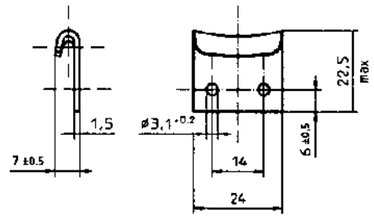

Artikel-Nr. : Part No.:	Material/Oberfläche: Material/Finish:
P1429L9-1BP	Stahl / rostfrei Stainless steel

Serie P1429L - Einbauanleitung / Installation Instruction

Spannverschluss mit Spannhaken / Gegenhaken für Spannhaken
Drawhook tension latch / drawhook strike

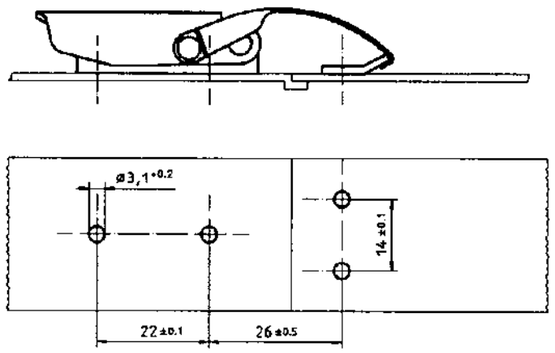

P1429L02-1-

P1429L8-

Spannverschluss mit Spannbügel / Gegenhaken für Spannbügel
Clip tension latch / clip strike

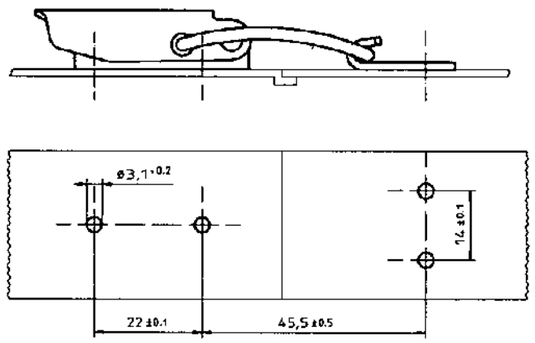

P1429L02-2-

P1429L9-

Spannverschluss mit gekröpftem Spannbügel
Bent clip tension latch

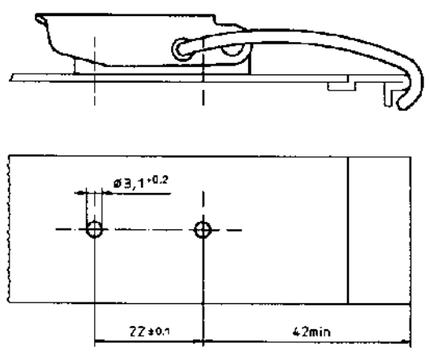

P1429L02-3-

P1429L9-

Toggles latches
Standard toggle latches

Serie PE2.03.

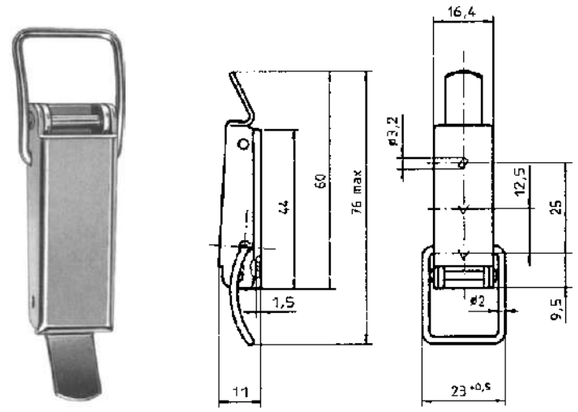

Artikel-Nr. : Part No.:	Material/Oberfläche: Material/Finish:
PE2.03.00.04/6	Stahl / verzinkt Steel / zinc-plated
PE2.03.00.30/6	Stahl / rostfrei Stainless steel

Mit Schlossöse
With hasp

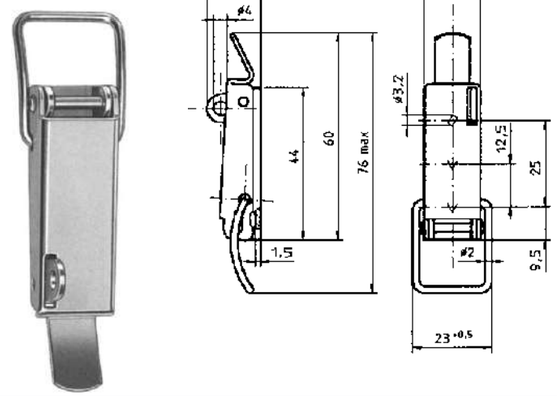

Artikel-Nr. : Part No.:	Material/Oberfläche: Material/Finish:
PE2.03.01.04/6	Stahl / verzinkt Steel / zinc-plated
PE2.03.01.30/6	Stahl / rostfrei Stainless steel

Mit Sicherung
With secondary lock

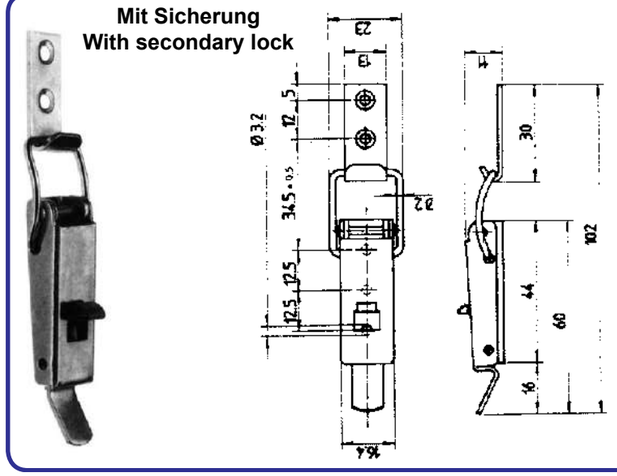

Artikel-Nr. : Part No.:	Material/Oberfläche: Material/Finish:
PE2.03.02.04/6	Stahl / verzinkt Steel / zinc-plated
PE2.03.02.30/6	Stahl / rostfrei Stainless steel

Serie PE2.03. - Gegenhaken / Strikes

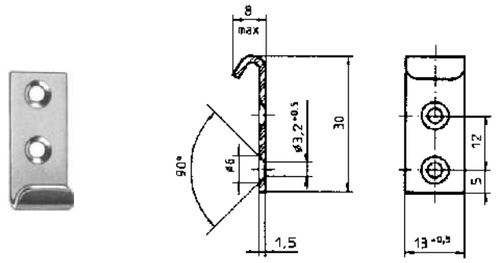

Artikel-Nr. : Part No.:	Material/Oberfläche: Material/Finish:
PE2.03.00.04/5	Stahl / verzinkt Steel / zinc-plated
PE2.03.00.30/5	Stahl / rostfrei Stainless steel

Einbauanleitung / Installation Instructions

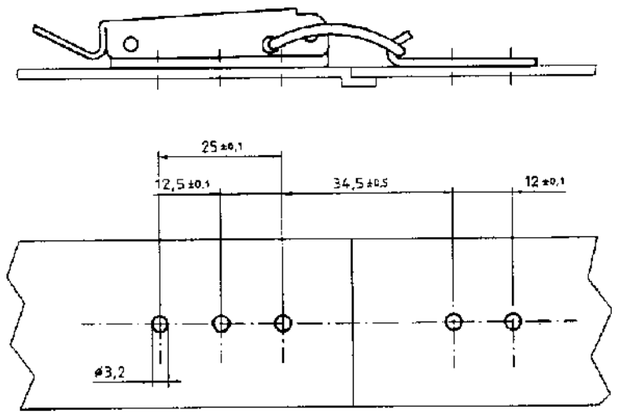

- Max. tensile strength 1200 N
- Available with secondary lock and hasp

Toggles latches
Standard toggle latches

PV951L

- Max. tensile strength 2.300 N, working load up to 1.550 N
- Adjustable drawhook
- Available with secondary lock and hasp

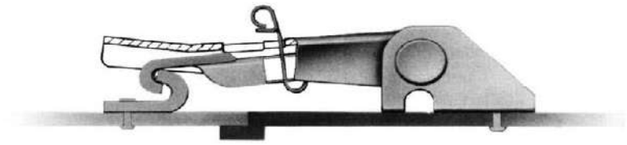

TENSILE STRENGTHS:

Max. tensile strength 2300 N with strike PV951L7-5A* + PV951L52-1A*

2000 N with strike PV951L50-1A*

2) Max. tensile strength 1500 N with strike PV951L7-5BP + PV951L52-1BP

3) due to mounting geometry, tensile strength reduced to approx. 1200 N

Serie PV951L

Offene Basis
Open Base

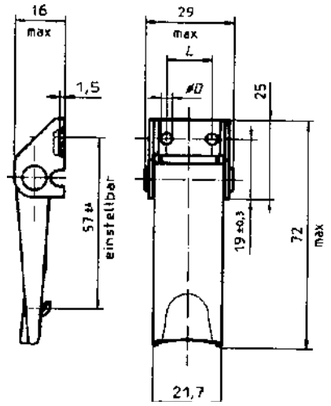

Artikel-Nr. : Part No.:	D	Material/Oberfläche: Material/Finish:
PV951L02-1-5AGV	4,2	Stahl / verzinkt, CrVI-frei transparent passiviert [1] Steel / zinc-plated, CrVI-free, transparent [1]
PV951L02-1-5BP	4,2	Stahl / rostfrei [2] Stainless steel [2]

L = 12,7 mm

Verdeckte Basis
Concealed base

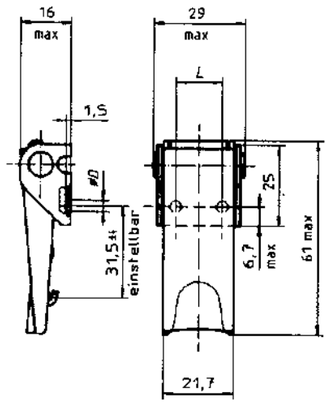

Artikel-Nr. : Part No.:	D	Material/Oberfläche: Material/Finish:
PV951L03-1-5AGV	4,2	Stahl / verzinkt, CrVI-frei transparent passiviert [3] Steel / zinc-plated, CrVI-free, transparent [3]
PV951L03-1-5AH	4,2	Stahl / verzinkt und schwarz chromatiert [3] Steel / zinc-plated, black chromate [3]
PV951L03-1-5BP	4,2	Stahl / rostfrei [3] Stainless steel [3]

L = 12,7 mm

Mit Schlossöse
With hasp

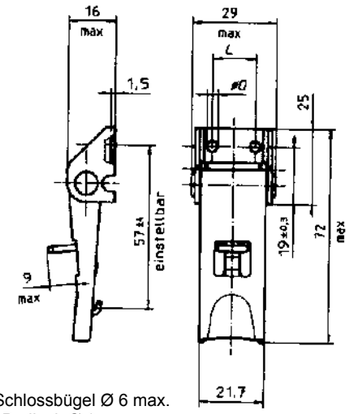

Öse für Schlossbügel Ø 6 max.
Hasp for Padlock Ø 6 max.

Artikel-Nr. : Part No.:	D	Material/Oberfläche: Material/Finish:
PV951L01-1Y5AF	4,2	Stahl / verzinkt und gelb chromatiert Steel / zinc-plated, yellow chromate
PV951L01-1Y5AGV	4,2	Stahl / verzinkt, CrVI-frei transparent passiviert [1] Steel / zinc-plated, CrVI-free, transparent passivated

L = 12,7 mm

D = Durchmesser / Diameter

Toggles latches
Standard toggle latches

Serie PV951L

Mit Sicherung, offene Basis
With secondary lock, open Base

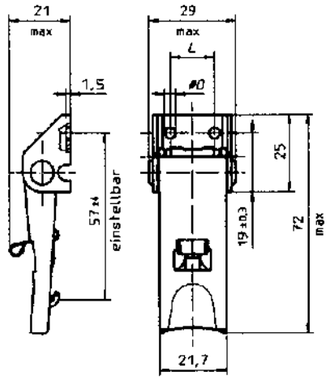

Artikel-Nr. : Part No.:	D	Material/Oberfläche: Material/Finish:
PV951L04-1X5AGV	4,2	Stahl / verzinkt, CrVI-frei transparent passiviert [1]
	Sicherung:	Stahl / rostfrei Steel / zinc-plated, CrVI-free, transparent [1]
	Sec.Lock:	Stainless steel
PV951L04-1X5BP	4,2	Stahl / rostfrei [2] Stainless steel [2]

L = 12,7 mm

Mit Sicherung, verdeckte Basis
With secondary lock, concealed base

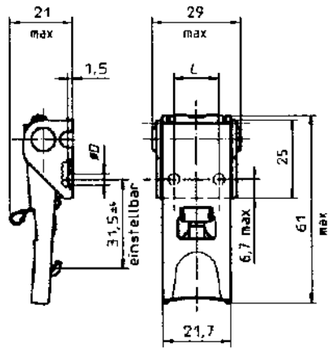

Artikel-Nr. : Part No.:	D	Material/Oberfläche: Material/Finish:
PV951L03-1X5AGV	4,2	Stahl / verzinkt, CrVI-frei transparent passiviert [3]
	Sicherung:	Stahl / rostfrei Steel / zinc-plated, CrVI-free, transparent [3]
	Sec.Lock:	Stainless steel
PV951L03-1X5BP	4,2	Stahl / rostfrei [3] Stainless steel [3]

L = 12,7 mm

Mit Sicherung, hohe Basis
With secondary lock, high base

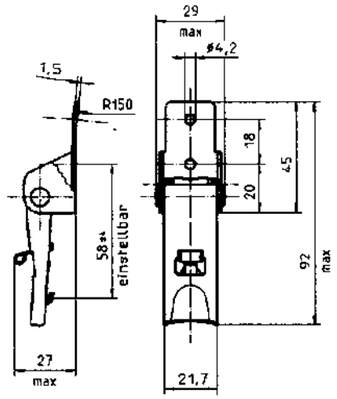

Artikel-Nr. : Part No.:	D	Material/Oberfläche: Material/Finish:
PV951L05-1X1AGV	4,2	Stahl / verzinkt, CrVI-frei transparent passiviert [1]
	Sicherung:	Stahl / rostfrei Steel / zinc-plated, CrVI-free, transparent [1]
	Sec.Lock:	Stainless steel
PV951L05-1X1BP	4,2	Stahl / rostfrei [2] Stainless steel [2]

L = 12,7 mm

D = Durchmesser / Diameter

Serie PV951L - Gegenhaken

Kurz
Short type

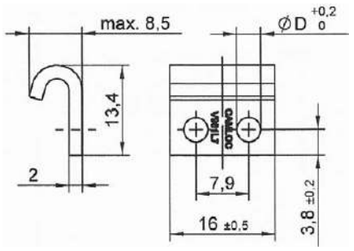

Artikel-Nr. : Part No.:	D	Material/Oberfläche: Material/Finish:
PV951L7-1AF	3,6	Stahl / verzinkt, gelb chromatiert Steel / zinc-plated, yellow chromate
PV951L7-5AGV	4,2	Stahl / verzinkt, CrVI-frei transparent passiviert Steel / zinc-plated, CrVI-free, transparent
PV951L7-5AD	4,2	Stahl / verchromt Steel / chrome-plated
PV951L7-5BP	4,2	Stahl / rostfrei Stainless steel

Mit Führung
With guidance

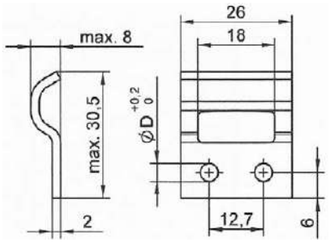

Artikel-Nr. : Part No.:	D	Material/Oberfläche: Material/Finish:
PV951L50-1AGV	4,2	Stahl / verzinkt, CrVI-frei transparent passiviert Steel / zinc-plated, CrVI-free, transparent
PV951L50-1BP	4,2	Stahl / rostfrei Stainless steel

Eckbefestigung
Corner Mounting

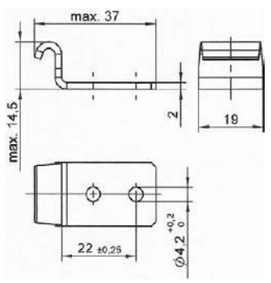

Artikel-Nr. : Part No.:	D	Material/Oberfläche: Material/Finish:
PV951L52-1AGV	4,2	Stahl / verzinkt, CrVI-frei transparent passiviert Steel / zinc-plated, CrVI-free, transparent
PV951L52-1BP	4,2	Stahl / rostfrei Stainless steel

D = Durchmesser / Diameter

Toggles latches
Standard toggle latches

Serie PV951L - Einbauanleitung / Installation Instructions

Spannverschluss offene Basis / Gegenhaken kurz
Open-base tension latch / short-type strike

PV951L02-
PV951L04-
PV951L01-

PV951L7-

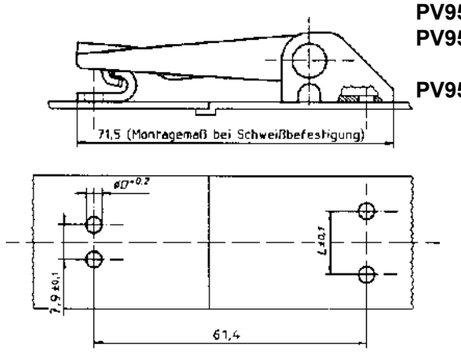

Spannverschluss verdeckte Basis / Gegenhaken kurz
Open-base tension latch / short-type strike

PV951L03-

PV951L7-

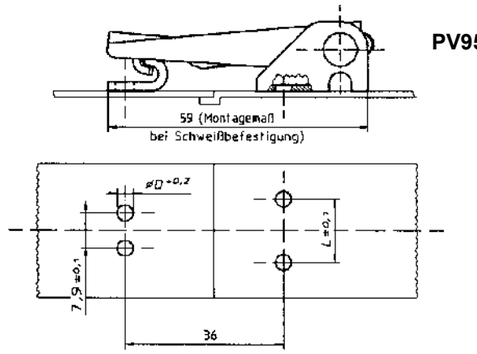

Spannverschluss offene Basis / Gegenhaken mit Führung
Open-base tension latch / strike with guidance

PV951L02-
PV951L04-
PV951L01-

PV951L50-

PV951L05-

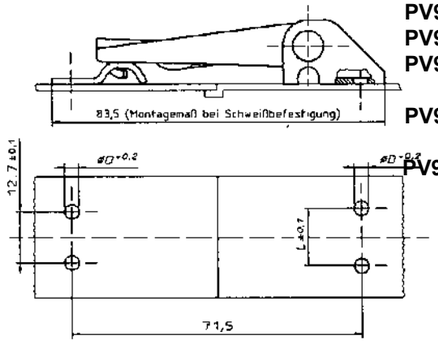

Spannverschluss verdeckte Basis / Gegenhaken mit Führung
Concealed-base tension latch / strike with guidance

PV951L03-

PV951L50-

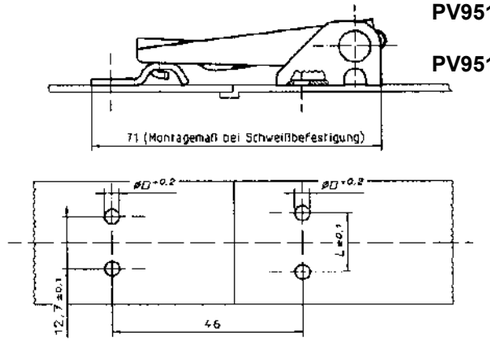

Spannverschluss offene Basis / Gegenhaken Eckbefestigung
Open-base tension latch/corner-mounting strike

PV951L02-
PV951L04-
PV951L01-

PV951L52-

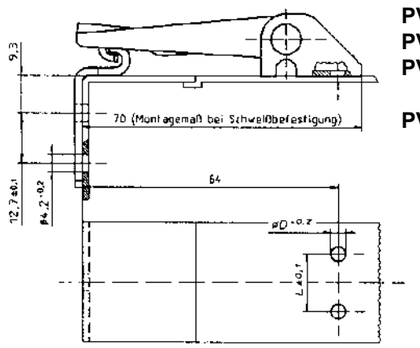

Spannverschluss verdeckte Basis / Gegenhaken Eckbefestigung
Concealed-base tension latch/corner-mounting strike

PV951L03-

PV951L52-

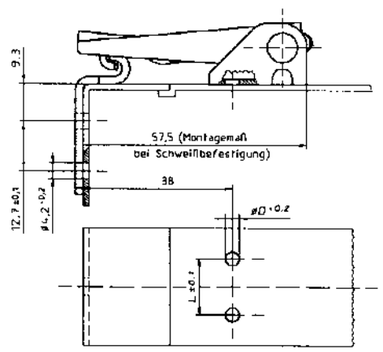

Serie P1174L

Mit Sicherung
with sec.lock

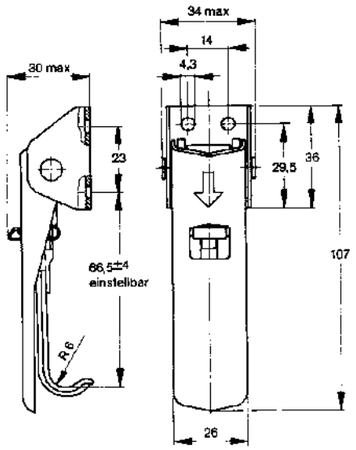

Artikel-Nr. : Part No.:	Material/Oberfläche: Material/Finish:
P1174L01-1X1AGV	Stahl / verzinkt, CrVI-frei transparent passiviert Steel / zinc-plated, CrVI-free, transparent passivated

Toggles latches
Standard toggle latches

Serie PV917L

- Max. tensile strength 3600 N, working load up to 2.700 N
- Adjustable drawhook
- Available with secondary lock and hasp

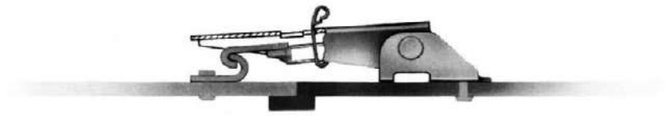

TENSILE STRENGTHS:

1) Max. tensile strength 3200 N with strike PV917L11-1-*AG
2200 N with strike PV951L50-*AGV

Max. tensile strength 2300 N with strike PV917L11-1-1BP
3600 N with strike PV951L50-*BP

Serie PV917L

Offene Basis
Open Base

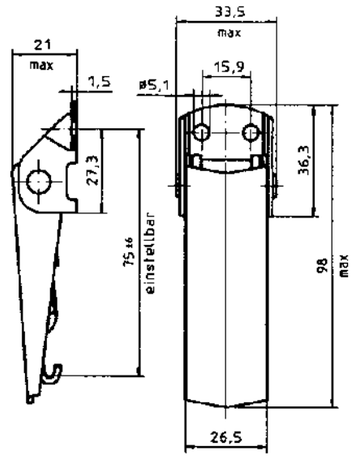

Artikel-Nr. : Part No.:	Material/Oberfläche: Material/Finish:
PV917L01-1-1AG	Stahl / verzinkt, CrVI-frei transparent passiviert [1] Steel / zinc-plated, CrVI-free, transparent passivated[1]
PV917L01-1-1BP	Stahl / rostfrei [2] Stainless steel [2]

Hohe Basis
High base

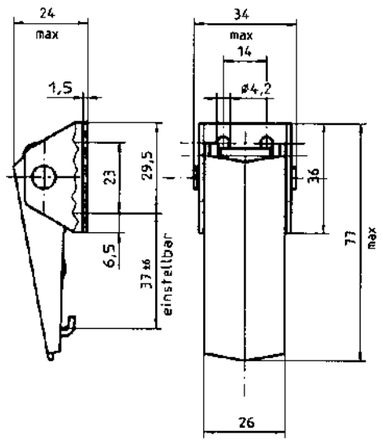

Artikel-Nr. : Part No.:	Material/Oberfläche: Material/Finish:
PV17L12-1-1AA	Stahl / verzinkt, CrVI-frei transparent passiviert [1] Steel / zinc-plated, CrVI-free, transparent passivated [1]
Mit Sicherung / With secondary lock:	
PV17L12-1X1AA	Stahl / verzinkt, CrVI-frei transparent passiviert [1] Steel / zinc-plated, CrVI-free, transparent passivated [1]

Offene Basis
mit Schlossöse
Open base
with hasp

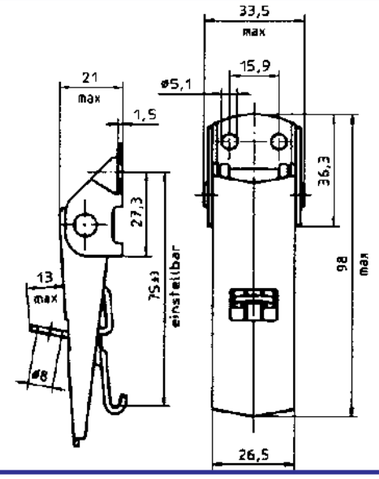

Artikel-Nr. : Part No.:	Material/Oberfläche: Material/Finish:
PV917L01-1Y1AG	Stahl / verzinkt, CrVI-frei transparent passiviert [1] Steel / zinc-plated, CrVI-free, transparent passivated [1]

D = Durchmesser / Diameter

Toggles latches
Standard toggle latches

Serie PV917L

Mit Sicherung
offene Basis
With sec. lock,
open Base

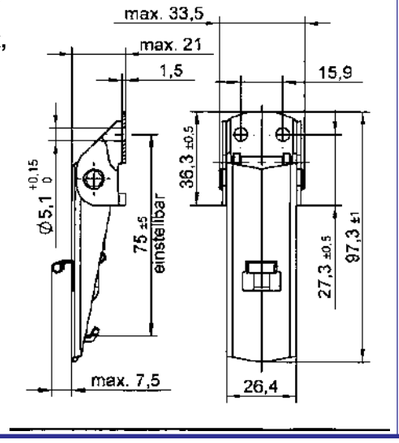

Part No.:	Material/Oberfläche: Material/Finish:
PV917L01-1X1AG	Stahl / verzinkt, CrVI-frei transparent passiviert [1] Steel / zinc-plated, CrVI-free, transparent passivated [1]
PV917L01-1X1BP	Stahl / rostfrei [2] Stainless steel [2] (1.4305)
PV917L01-1X1CP	Stahl / rostfrei [2] Stainless steel [2] (1.4571)
PV917L01-1X1BT	Stahl / rostfrei schwarz verchromt stainless steel, black chrome-plated

Mit Sicherung
hohe Basis
With sec. lock,
high base

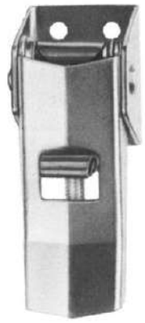

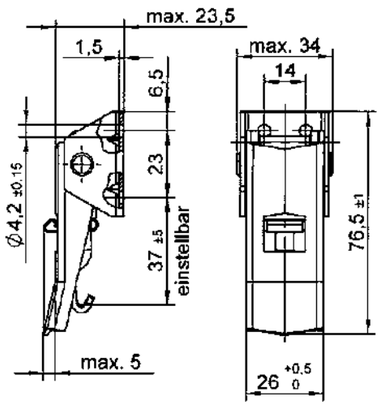

Artikel-Nr. : Part No.:	Material/Oberfläche: Material/Finish:
PV17L12-2X1AA	Stahl / verzinkt, CrVI-frei transparent passiviert [1] Steel / zinc-plated, CrVI-free, transparent passivated [1]

Mit Sicherung für gewölbte Flächen
With sec. lock, for curved surfaces
(R min = 125 mm)

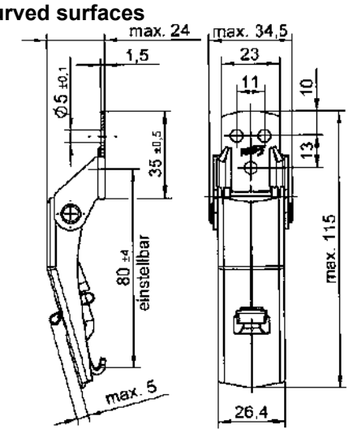

Artikel-Nr. : Part No.:	Material/Oberfläche: Material/Finish:
P1449L02-1X1AG	Stahl / verzinkt, CrVI-frei transparent passiviert [1] Steel / zinc-plated, CrVI-free, transparent passivated [1]
P1449L02-1X1BP	Stahl / rostfrei [2] Stainless steel [2]

D = Durchmesser / Diameter

Serie PV917L - Gegenhaken / Strike

Kurz
Short type

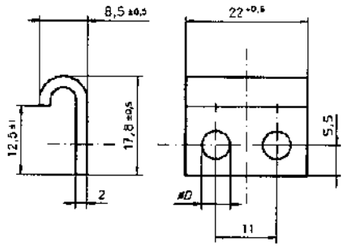

Artikel-Nr. : Part No.:	D	Material/Oberfläche: Material/Finish:
PV917L11-1-1AG	5,1	Stahl / verzinkt, CrVI-frei transparent passiviert Steel / zinc-plated, CrVI-free, transparent
PV917L11-1-3AG	4,2	Stahl / verzinkt, CrVI-frei transparent passiviert Steel / zinc-plated, CrVI-free, transparent
PV917L11-1-1BP	5,1	Stahl / rostfrei Stainless steel

Mit Führung
With guidance

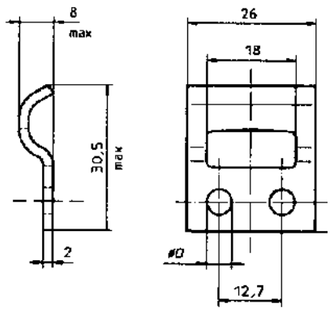

Artikel-Nr. : Part No.:	D	Material/Oberfläche: Material/Finish:
PV951L50-1AGV	4,2	Stahl / verzinkt, CrVI-frei transparent passiviert Steel / zinc-plated, CrVI-free, transparent
PV951L50-5AG	5,1	Stahl / verzinkt, CrVI-frei transparent passiviert Steel / zinc-plated, CrVI-free, transparent
PV951L50-5BP	5,1	Stahl / rostfrei Stainless steel
PV951L50-1BP	4,2	Stahl / rostfrei Stainless steel

Eckbefestigung
Corner Mounting

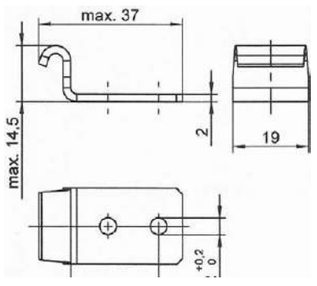

Artikel-Nr. : Part No.:	D	Material/Oberfläche: Material/Finish:
PV951L52-1AGV	4,2	Stahl / verzinkt, CrVI-frei transparent passiviert Steel / zinc-plated, CrVI-free, transparent
PV951L52-1BP	4,2	Stahl / rostfrei Stainless steel

D = Durchmesser / Diameter

Toggles latches
Standard toggle latches

Serie PV917L - Einbauanleitung / Installation Instructions

Spannverschluss offene Basis / Gegenhaken kurz
Open-base tension latch / short-type strike

PV917L01-

PV917L11-

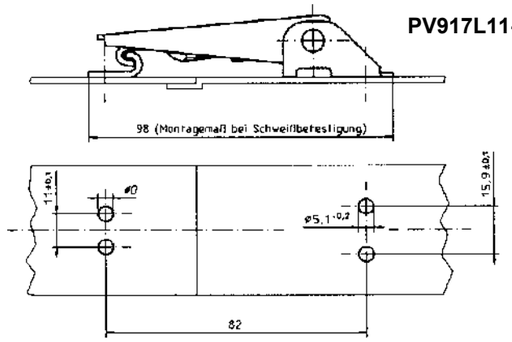

Spannverschluss hohe Basis / Gegenhaken kurz
High-base tension latch / short-type strike

PV917L12-
PV17L12-

PV917L11-

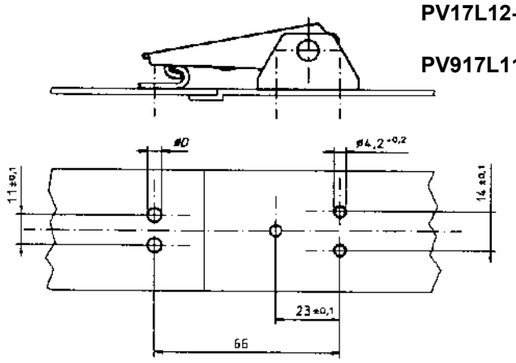

Spannverschluss offene Basis / Gegenhaken mit Führung
Open-base tension latch / strike with guidance

PV917L01-

PV951L50-

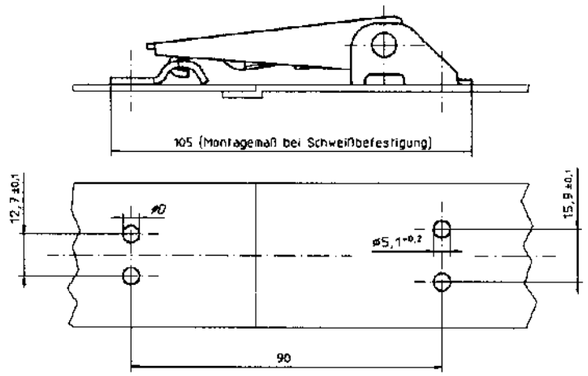

Spannverschluss für gewölbte Flächen / Gegenhaken mit Führung
Tension latch for curved surfaces / strike with guidance

P1449L02 -

PV951L50

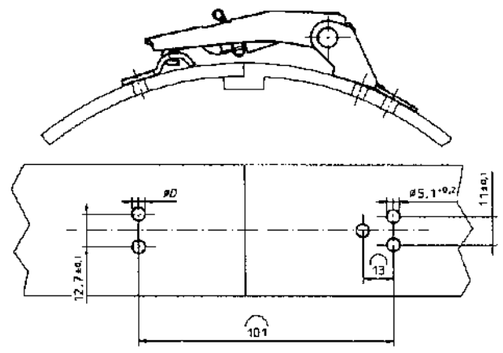

Durchmesser D entsprechend der Gegenhaken-Ausführung wählen.
Select diameter D in accordance with the strike style.

Serie PV18L

- Zugbelastung max. 6.000 N, Betriebsbelastung bis 4.200 N
- Spannhaken einstellbar
- Mit Sicherung und Schlossöse lieferbar

- Max. tensile strength 6.000 N, working load up to 4.200 N
- Adjustable drawhook
- Available with secondary lock and hasp

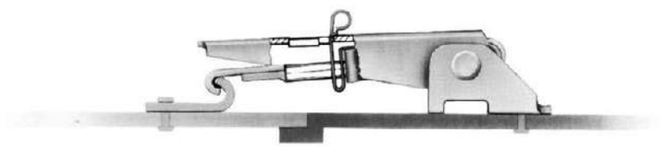

Toggles latches
Standard toggle latches

Serie PV18L

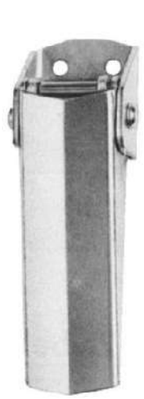

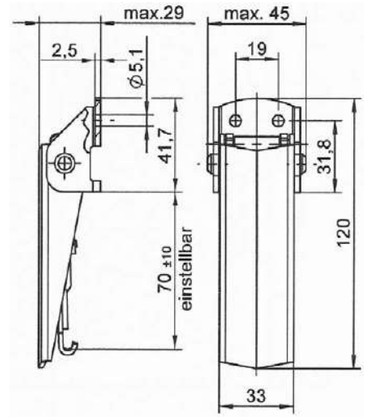

Artikel-Nr. : Part No.:	Material/Oberfläche: Material/Finish:
PV18L01-1-1AGV	Stahl / verzinkt, CrVI-frei transparent passiviert [1] Steel / zinc-plated, CrVI-free, transparent passivated [1]
PV18L01-1-1BP	Stahl / rostfrei [2] Stainless steel [2]

Mit Sicherung
With sec. lock

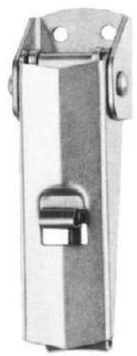

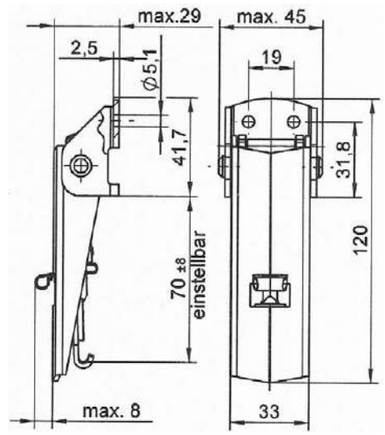

Artikel-Nr. : Part No.:	Material/Oberfläche: Material/Finish:
PV18L01-1X1AGV	Stahl / verzinkt, CrVI-frei transparent passiviert [1] Steel / zinc-plated, CrVI-free, transparent passivated [1]
PV18L01-1X1BP	Stahl / rostfrei [2] Stainless steel [2]

Mit Schlossöse
With hasp

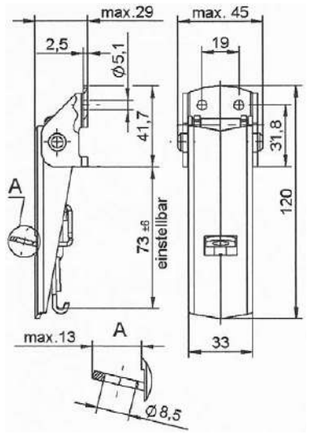

Artikel-Nr. : Part No.:	Material/Oberfläche: Material/Finish:
PV18L01-1Y1AGV	Stahl / verzinkt, CrVI-frei transparent passiviert [1] Steel / zinc-plated, CrVI-free, transparent passivated [1]

Serie PV18L

Mit Zylinderschloss*)
With keylock

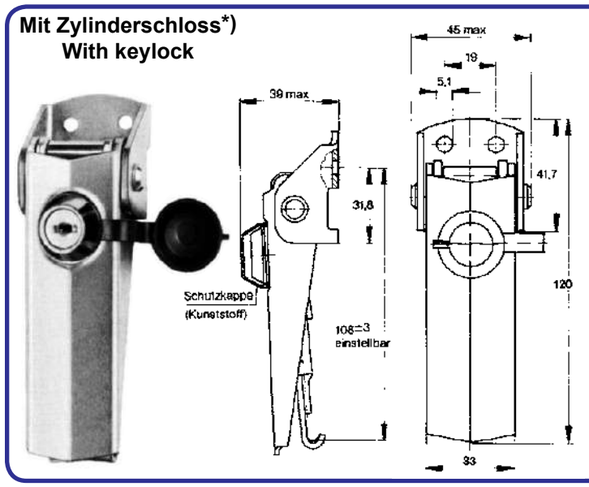

Artikel-Nr. : Part No.:	Material/Oberfläche: Material/Finish:
PV18L01-2Z1AGV	Stahl / verzinkt, CrVI-frei transparent passiviert [1)] Steel / zinc-plated, CrVI-free, transparent passivated [1)]

*) gleichschließend
*) simultaneous locking

Gegenhaken / Strike

Kurz
Short type

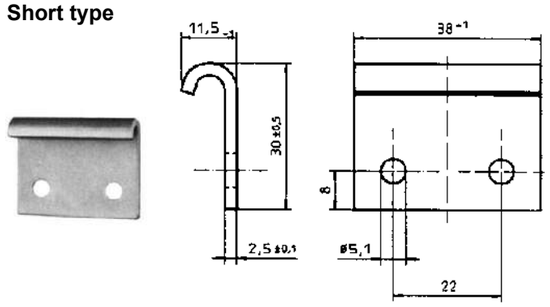

Artikel-Nr. : Part No.:	Material/Oberfläche: Material/Finish:
PV18L13-1-1AGV	Stahl / verzinkt, CrVI-frei transparent passiviert Steel / zinc-plated, CrVI-free, transparent passivated
PV18L13-1-1BP	Stahl / rostfrei Stainless steel

Mit Führung
With guidance

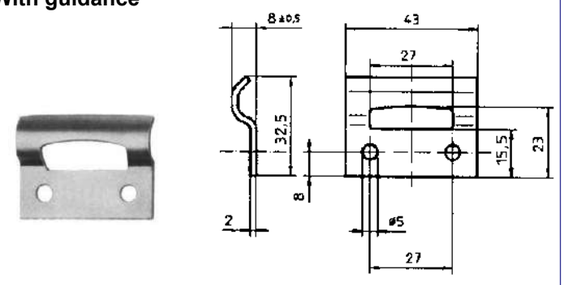

Artikel-Nr. : Part No.:	Material/Oberfläche: Material/Finish:
P1449L07-1BP	Stahl / rostfrei Stainless steel

Toggles latches
Standard toggle latches

Serie PV18L - Einbauanleitung / Installation Instructions

Spannverschluss / Gegenhaken kurz
Tension latch / short-type strike

PV18L01 -

PV18L13-

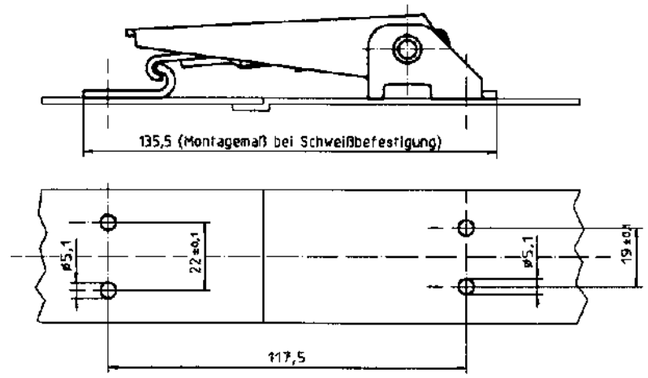

Spannverschluss / Gegenhaken mit Führung
Tension latch / strike with guidance

PV18L01 -

P1449L07-

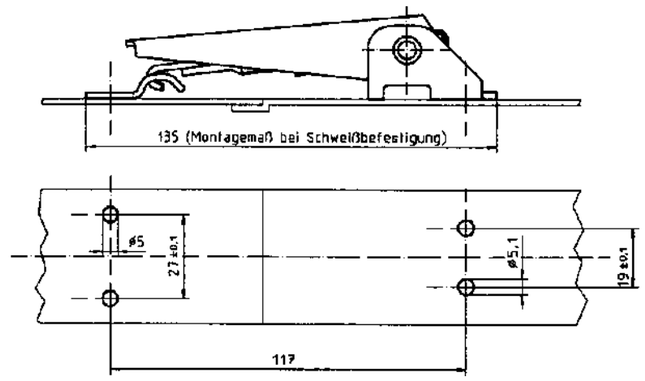

Serie PV46L

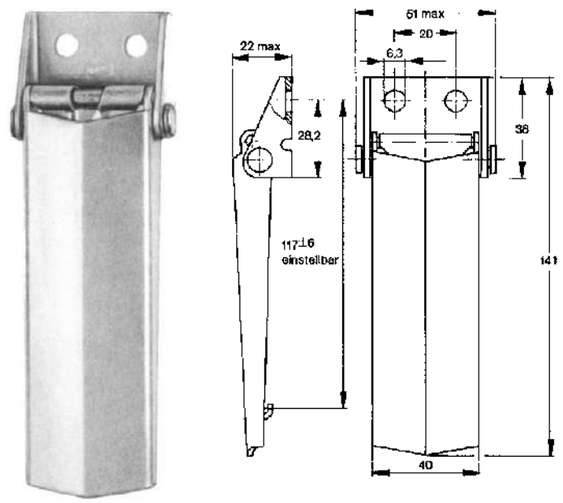

Artikel-Nr. : Part No.:	Material/Oberfläche: Material/Finish:
PV46L38-1-6AA	Stahl / verzinkt, Steel / zinc-plated, yellow chromate

Toggle latches

Steel / Stainless Steel

SPECIFICATION

Types

- Type **A**: without spring cotter pin
- Type **B**: with spring cotter pin

Version in Steel ST
zinc plated, blue passivated

Version in Stainless Steel NI
AISI 304

INFORMATION

The outstanding features of GN 8330 toggle latches are superior functionality and design. The integrated spring mechanism holds the locking lever and the clamping hook in the open position and allows effortless operation.
Once the dead center is exceeded, the elasticity of the sheet metal parts will cause the toggle latch to close. In the clamped position, the required drill hole spacing is m2.
With the stroke w of the clamping hook, the elements to be connected can be pulled together during clamping.
The toggle latch can be secured against opening inadvertently with the so-called spring cotter pin. The spring cotter pin is placed into the d2 bore hole. Sealing is also possible via d2.
The retaining force given in the table is a guide value for the potentially static tensile stress load acting on the toggle latch. Depending on the conditions of use (e.g. when exposed to vibrations or shock impact), the retaining force may be impaired.
Screws with low-lying flat head must be used to guarantee the proper function. The drill template also allows the assembly using blank rivets.

ON REQUEST

- GN 8330.1 spring cotter pin

DESCRIPTION OF FUNCTION

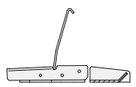

If not operated (i.e. not in the clamping position), both the locking lever and the clamping hook are held in the position shown, kept in place by two torsion springs.

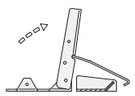

Lifting the clamping lever will swivel the clamping hook into the level of the catch bracket.

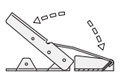

For the clamping action, the clamping hook is pressed into the catch bracket and the locking lever is at the same time turned into the starting (retaining) position.

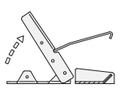

To release, simply lift the locking lever.

Toggles latches
Standard toggle latches

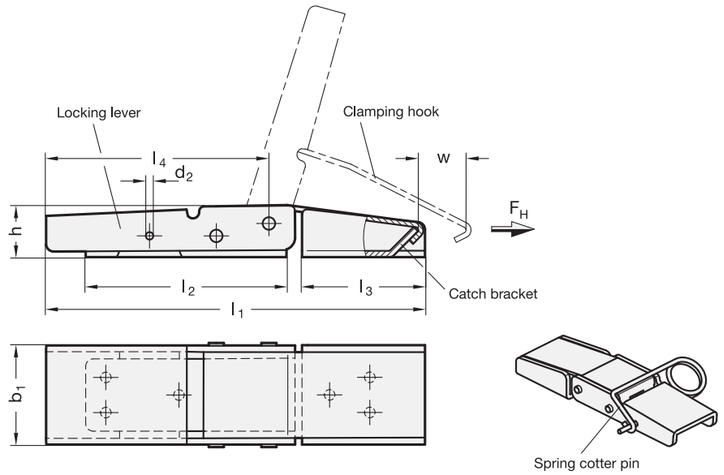

Hole pattern for b_1 = 40

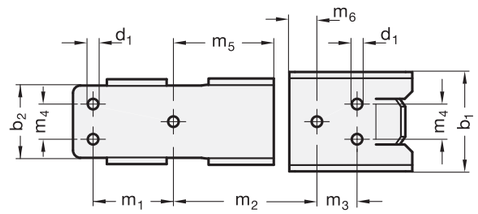

Hole pattern for b_1 = 15 / 20 / 29

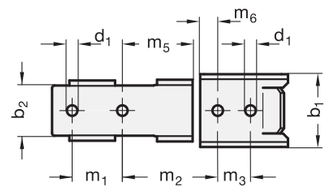

GN 8330

Description	b1	FH in N	b2	d1	d2	h	l1 ≈	l2	l3	l4	m1	m2	m3	m4	m5	m6	w ≈	⚖
GN 8330-15-ST-A	15	100	9.5	3.4	1.4	8	53	25	17	31.5	9.5	13.5	6.2	-	8.5	3	11	16
GN 8330-20-ST-A	20	300	13	3.4	1.8	10	76	34	25	44	8	29	8	-	22	4	9	35
GN 8330-29-ST-A	29	600	20	4.2	2.5	15	111	56	35	67	20	38.8	13	-	28	7	11	123
GN 8330-40-ST-A	40	1200	29	4.2	3	20	152	80	49	89	32	57.3	16	14	40	11	19	289
GN 8330-15-ST-B	15	100	9.5	3.4	1.4	8	53	25	17	31.5	9.5	13.5	6.2	-	8.5	3	11	17
GN 8330-20-ST-B	20	300	13	3.4	1.8	10	76	34	25	44	8	29	8	-	22	4	9	36
GN 8330-29-ST-B	29	600	20	4.2	2.5	15	111	56	35	67	20	38.8	13	-	28	7	11	128
GN 8330-40-ST-B	40	1200	29	4.2	3	20	152	80	49	89	32	57.3	16	14	40	11	19	294

GN 8330-NI **STAINLESS STEEL**

Description	b1	FH in N	b2	d1	d2	h	l1 ≈	l2	l3	l4	m1	m2	m3	m4	m5	m6	w ≈	⚖
GN 8330-15-NI-A	15	100	9.5	3.4	1.4	8	53	25	17	31.5	9.5	13.5	6.2	-	8.5	3	11	15
GN 8330-20-NI-A	20	300	13	3.4	1.8	10	76	34	25	44	8	29	8	-	22	4	9	37
GN 8330-29-NI-A	29	600	20	4.2	2.5	15	111	56	35	67	20	38.8	13	-	28	7	11	117
GN 8330-40-NI-A	40	1200	29	4.2	3	20	152	80	49	89	32	57.3	16	14	40	11	19	281
GN 8330-15-NI-B	15	100	9.5	3.4	1.4	8	53	25	17	31.5	9.5	13.5	6.2	-	8.5	3	11	17
GN 8330-20-NI-B	20	300	13	3.4	1.8	10	76	34	25	44	8	29	8	-	22	4	9	38
GN 8330-29-NI-B	29	600	20	4.2	2.5	15	111	56	35	67	20	38.8	13	-	28	7	11	122
GN 8330-40-NI-B	40	1200	29	4.2	3	20	152	80	49	89	32	57.3	16	14	40	11	19	286

Toggle latches

Steel / Stainless Steel

SPECIFICATION

Types

- Type **A**: without safety catch
- Type **S**: with safety catch
- Type **SV**: for safety catch with padlock

Identification No.

- No. **1**: long Type
- No. **2**: short Type

Version in Steel ST

zinc plated, blue passivated

Version in Stainless Steel NI

- Parts in sheet metal AISI 304
- Clamping hook / pin AISI 303

INFORMATION

GN 831 toggle latches are used among others for the secure holding of flaps and container lids. The clamps will lock securely over the centre and are thus vibration proof.
The stroke w_1 of the clamping hook can pull the parts to be clamped together by up to 6 mm. The range w_2 can be adjusted on the M6 threaded spindle at the clamping hook.
The types S and SV prevent unwanted release of the toggle latch.
Screws with low head height such as DIN 6912 are used to fix the toggle latches.
The load specified in the table are simply guide line values for a nominal static pulling force which the lock can withstand. Depending on the conditions under which these toggle latches are used such as vibration or shock loads, the holding capacity can be adversely affected.
The catch bracket is included.

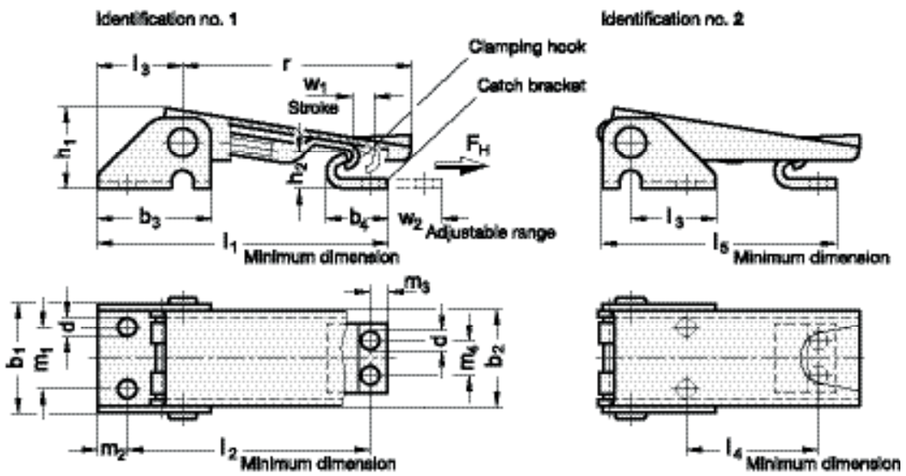

Toggles latches
Standard toggle latches

The respective long versions (Identification no. 1) are pictured

Type **A**
without safety catch

Type **S**
with safety catch

Type **SV**
for safety with padlock

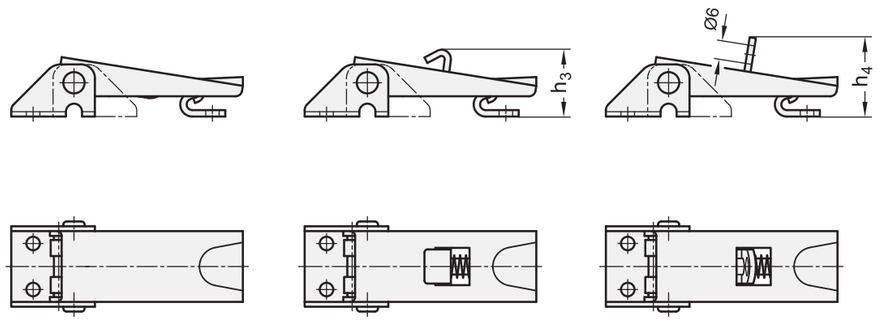

GN 831

Description	Size	F_H in N	b1	b2	b3	b4	d	h1	h2	h3	h4	l1 min.	l2 min.	l3	l4 min.	l5 min.	m1	m2	m3	m4	r	w1 ≈	w2 ≈	⚖
GN 831-100-A-ST-1	100	1000	25.5	22	26	14	4.2	18.5	8.5	-	-	67	56	19.5	-	-	14.3	7	4	8	51	5.5	12	55
GN 831-100-A-ST-2	100	1000	25.5	22	26	14	4.2	18.5	8.5	-	-	-	-	19.5	31	54	14.3	7	4	8	51	5.5	12	40
GN 831-100-S-ST-1	100	1000	25.5	22	26	14	4.2	18.5	8.5	21.5	-	74	63	19.5	-	-	14.3	7	4	8	51	5.5	8	60
GN 831-100-S-ST-2	100	1000	25.5	22	26	14	4.2	18.5	8.5	21.5	-	-	-	19.5	38	61	14.3	7	4	8	51	5.5	8	58
GN 831-100-SV-ST-1	100	1000	25.5	22	26	14	4.2	18.5	8.5	-	25.5	67	56	19.5	-	-	14.3	7	4	8	51	5.5	12	55
GN 831-100-SV-ST-2	100	1000	25.5	22	26	14	4.2	18.5	8.5	-	25.5	-	-	19.5	31	54	14.3	7	4	8	51	5.5	12	55

GN 831-NI **STAINLESS STEEL**

Description	Size	F_H in N	b1	b2	b3	b4	d	h1	h2	h3	h4	l1 min.	l2 min.	l3	l4 min.	l5 min.	m1	m2	m3	m4	r	w1 ≈	w2 ≈	⚖
GN 831-100-A-NI-1	100	1000	25.5	22	26	14	4.2	18.5	8.5	-	-	67	56	19.5	-	-	14.3	7	4	8	51	5.5	12	54
GN 831-100-A-NI-2	100	1000	25.5	22	26	14	4.2	18.5	8.5	-	-	-	-	19.5	31	54	14.3	7	4	8	51	5.5	12	54
GN 831-100-S-NI-1	100	1000	25.5	22	26	14	4.2	18.5	8.5	21.5	-	74	63	19.5	-	-	14.3	7	4	8	51	5.5	8	50
GN 831-100-S-NI-2	100	1000	25.5	22	26	14	4.2	18.5	8.5	21.5	-	-	-	19.5	38	61	14.3	7	4	8	51	5.5	8	49
GN 831-100-SV-NI-1	100	1000	25.5	22	26	14	4.2	18.5	8.5	-	25.5	67	56	19.5	-	-	14.3	7	4	8	51	5.5	12	57
GN 831-100-SV-NI-2	100	1000	25.5	22	26	14	4.2	18.5	8.5	-	25.5	-	-	19.5	31	54	14.3	7	4	8	51	5.5	12	55

Standard toggle latches

STANDARD EXECUTIONS
- **TLA**: basic hook clamp.
- **TLAL**: hook clamp with padlock hole.
- **TLAS**: hook clamp with security stop and technopolymer push button in RAL 3000 red colour or with stainless steel spring.

Indexes for materials and treatments to add to the above-mentioned standard executions:
- **Z**: lever body and bracket in zinc-plated steel.
- **SST**: lever body and bracket in AISI 304 stainless steel.
- **NH**: lever body and bracket in nickel-plated steel.

SPECIAL EXECUTIONS ON REQUEST
- Hook clamps in unplated steel.
- Catch brackets in different shapes and finishes.

Radial strength tests

TLA
TLA.SST

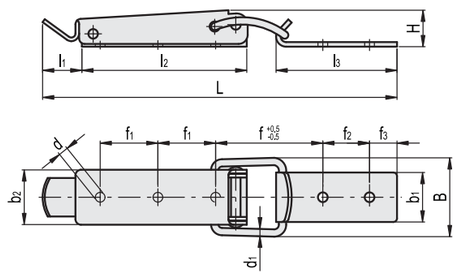

TLA.Z

Code	Description	b2	L	B	H	d	d1	b1	l1	l2	l3	f	f1	f2	f3	Max. working load [N]	Load at breakage [N]	⚖
420081	TLA.Z-16.4/102+R	16.4	102	23	11	3.2	2	13	16	44	30	34.5	12.5	12	5	550	1200	31
420061	TLA.Z-23/140.5+R	23	140.5	34	12.5	4.1	3	19	16	70	43	38	22.5	20	8	1500	3000	78
420051	TLA.Z-30/193.5+R	30	193.5	43	19	5.3	4	27	21.5	90	66	58.5	31.5	25.5	15	2000	4000	188

TLA.SST — **STAINLESS STEEL**

Code	Description	b2	L	B	H	d	d1	b1	l1	l2	l3	f	f1	f2	f3	Max. working load [N]	Load at breakage [N]	⚖
420082	TLA.SST-16.4/102+R	16.4	102	23	11	3.2	2	13	16	44	30	34.5	12.5	12	5	550	1200	31
420062	TLA.SST-23/140.5+R	23	140.5	34	12.5	4.1	3	19	16	70	43	38	22.5	20	8	1500	3000	78
420052	TLA.SST-30/193.5+R	30	193.5	43	19	5.3	4	27	21.5	90	66	58.5	31.5	25.5	15	2000	4000	188

Toggles latches

Standard toggle latches

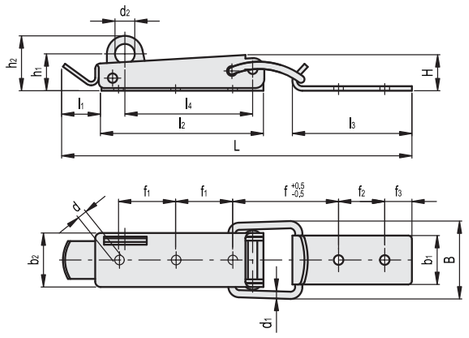

TLAL.Z

Code	Description	b2	L	B	H	d	d1	d2	b1	l1	l2	l3	l4	f	f1	f2	f3	h1	h2	Max. working load [N]	Load at breakage [N]	⚖
420085	TLAL.Z-16.4/102+R	16.4	102	23	11	3.2	2	4	13	16	44	30	34.5	34.5	12.5	12	5	11.5	15.5	550	1200	32
420063	TLAL.Z-23/140.5+R	23	140.5	34	12.5	4.1	3	7	19	16	70	43	55	38	22.5	20	8	13	20	1500	3000	79
420053	TLAL.Z-30/193.5+R	30	193.5	43	19	5.3	4	11	27	21.5	90	66	71	58.5	31.5	25.5	15	20.5	30.5	2000	4000	189

TLAL.SST — **STAINLESS STEEL**

Code	Description	b2	L	B	H	d	d1	d2	b1	l1	l2	l3	l4	f	f1	f2	f3	h1	h2	Max. working load [N]	Load at breakage [N]	⚖
420086	TLAL.SST-16.4/102+R	16.4	102	23	11	3.2	2	4	13	16	44	30	34.5	34.5	12.5	12	5	11.5	15.5	550	1200	32
420064	TLAL.SST-23/140.5+R	23	140.5	34	12.5	4.1	3	7	19	16	70	43	55	38	22.5	20	8	13	20	1500	3000	79
420054	TLAL.SST-30/193.5+R	30	193.5	43	19	5.3	4	11	27	21.5	90	66	71	58.5	31.5	25.5	15	20.5	30.5	2000	4000	189

TLAS.NH-30/193.5+R
TLAS.SST-30/193.5+R

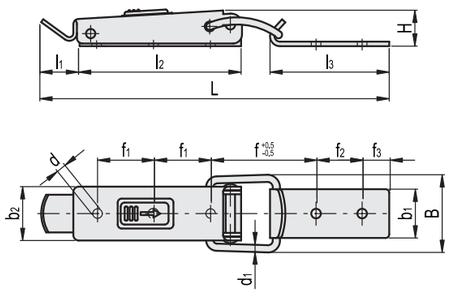

TLAS.Z-16.4/102+R
TLAS.SST-16.4/102+R

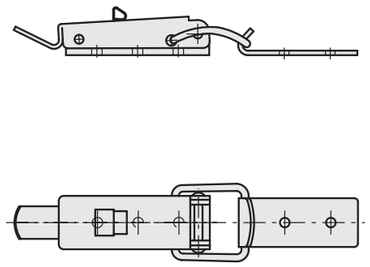

TLAS.

Code	Description	b2	L	B	H	d	d1	b1	l1	l2	l3	f	f1	f2	f3	Max. working load [N]	Load at breakage [N]	⚖
420083	TLAS.Z-16.4/102+R	16.4	102	23	11	3.2	2	13	16	44	30	34.5	12.5	12	5	550	1200	32
420055	TLAS.NH-30/193.5+R	30	193.5	43	19	5.3	4	27	21.5	90	66	58.5	31.5	25.5	15	2000	4000	189

TLAS.SST — **STAINLESS STEEL**

Code	Description	b2	L	B	H	d	d1	b1	l1	l2	l3	f	f1	f2	f3	Max. working load [N]	Load at breakage [N]	⚖
420084	TLAS.SST-16.4/102+R	16.4	102	23	11	3.2	2	13	16	44	30	34.5	12.5	12	5	550	1200	32
420056	TLAS.SST-30/193.5+R	30	193.5	43	19	5.3	4	27	21.5	90	66	58.5	31.5	25.5	15	2000	4000	189

Standard toggle latches

STANDARD EXECUTIONS
- **TLI.Z**: zinc-plated steel.
- **TLI.SST**: AISI 304 stainless steel.

SPECIAL EXECUTIONS ON REQUEST
- Hook clamps in unplated steel or nickel-plated steel.

MATERIAL
Zinc-plated steel.

SPECIAL EXECUTIONS ON REQUEST
Hook clamps in AISI 304 stainless steel.

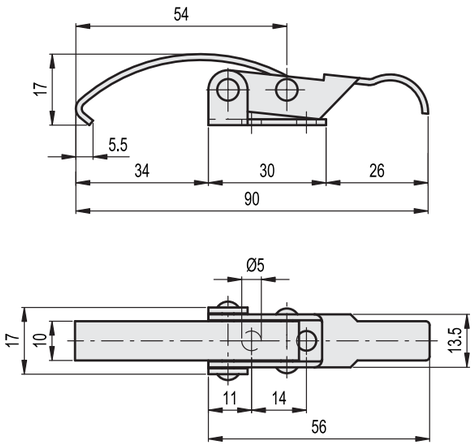

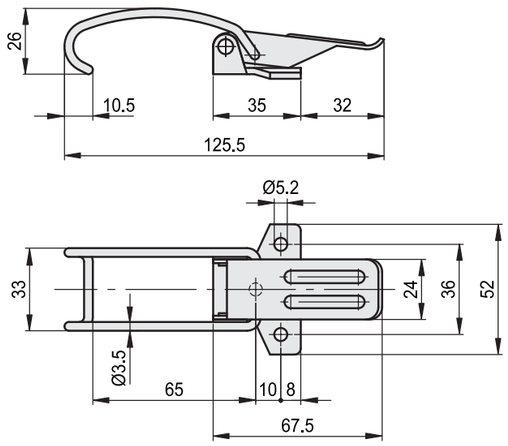

TLI.Z

Code	Description	Max. working load [N]	Load at breakage [N]	⚖
420131	TLI.Z-13.5/90	500	900	28

TLI.SST STAINLESS STEEL

Code	Description	Max. working load [N]	Load at breakage [N]	⚖
420132	TLI.SST-13.5/90	500	900	28

Code	Description	Max. working load [N]	Load at breakage [N]	⚖
420141	TLL.Z-24/125	200	3500	77

Toggles latches

Standard toggle latches

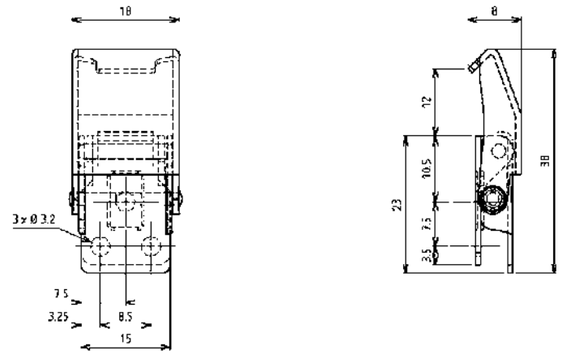

Toggle latch with claw links	
Raw steel drilled	6005_E200-KA
Zinc plated steel DS plus Top Coat drilled	6005_E200-JQ
AISI 304 drilled	6005_E200-PC

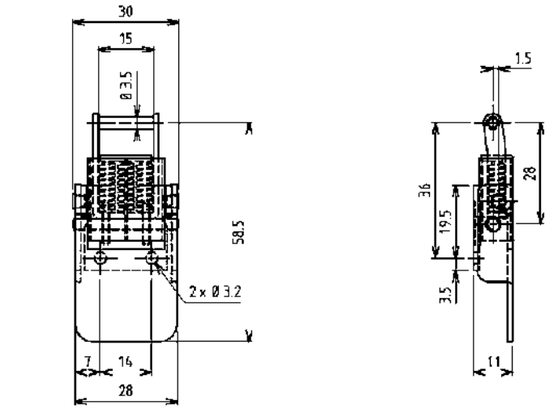

Toggle latch with claw links	
Zinc plated steel DS plus Top Coat drilled	6005_E28-JQ
AISI 304 drilled	6005_E28-PC

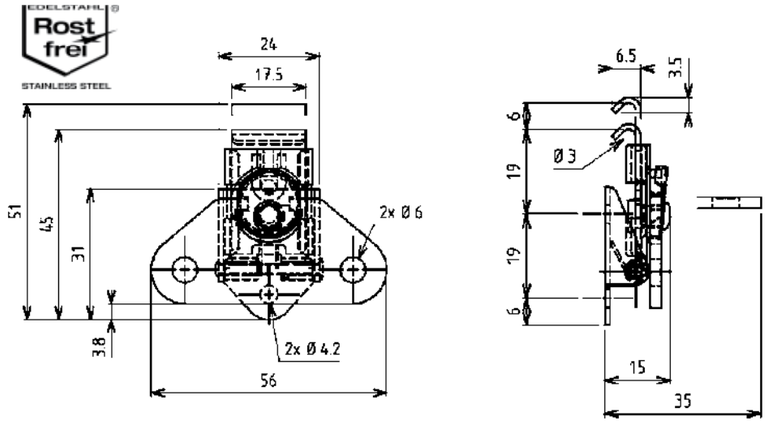

Compression latch	
Zinc plated steel DS plus Top Coat drilled	6006_E10-JQ
AISI 304 drilled	6006_E10-PC

Standard toggle latches

Special toggle latches

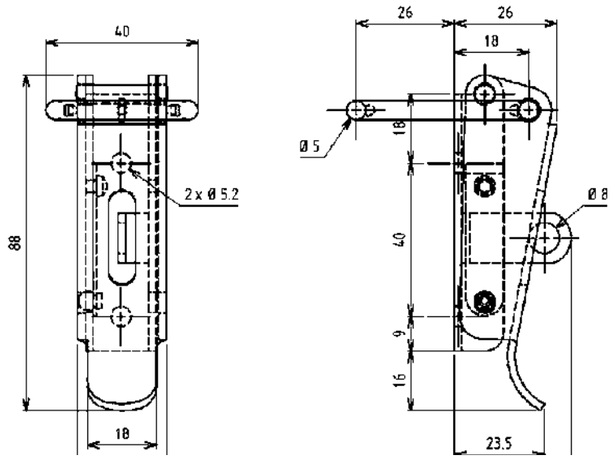

Toggle latch with corner function		
	Without padlock-facility	With padlock-facility
Zinc plated steel DS plus Top Coat drilled	6006_E46-JQ	6006_E47-JQ

AISI INOX

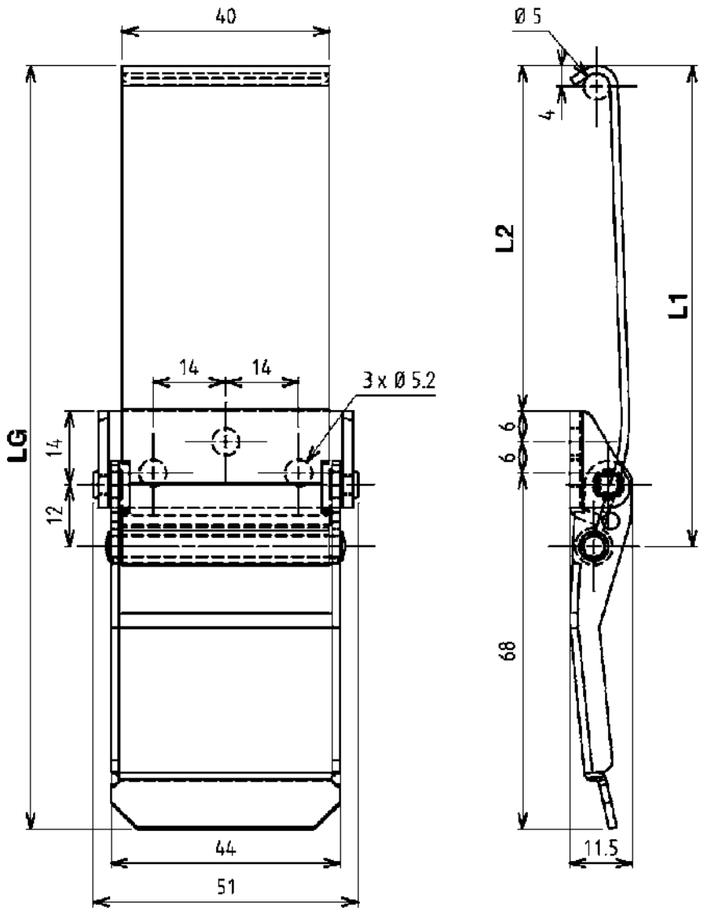

Toggle latch	LG	L1	L2	Without padlock-facility	With padlock-facility
Zinc plated steel DS plus Top Coat drilled	110	56	29	6007_E689-56JQ	
AISI 304 drilled	110	56	29	6007_E689-56PC	
Zinc plated steel DS plus Top Coat drilled	120	67	39	6007_E689-67JQ	6007_E692-67JQ
AISI 304 drilled	120	67	39	6007_E689-67PC	6007_E692-67PC
Zinc plated steel DS plus Top Coat drilled	131	77	50	6007_E689-77JQ	
AISI 304 drilled	131	77	50	6007_E689-77PC	
Zinc plated steel DS plus Top Coat drilled	147	93	66	6007_E689-93JQ	
AISI 304 drilled	147	93	66	6007_E689-93PC	

Toggle latches with adjustable clamping hook

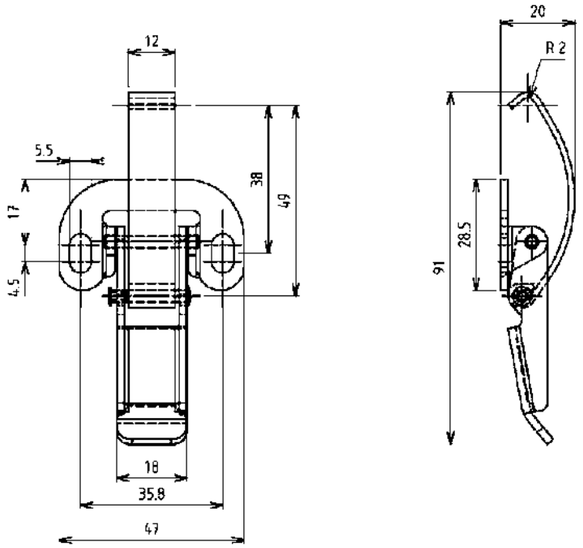

Toggle latch	
Zinc plated steel DS plus Top Coat drilled	6007_E435-JQ
AISI 304 drilled	6007_E435-PC

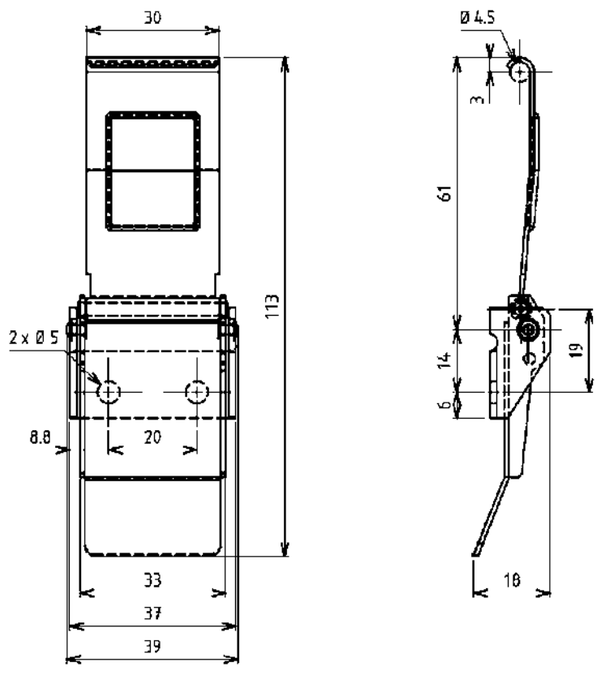

Toggle latch	
Zinc plated steel DS plus Top Coat drilled	6007_E80-JQ
AISI 304 drilled	6007_E80-PC

AISI INOX

AISI INOX

Adjustable toggle latches

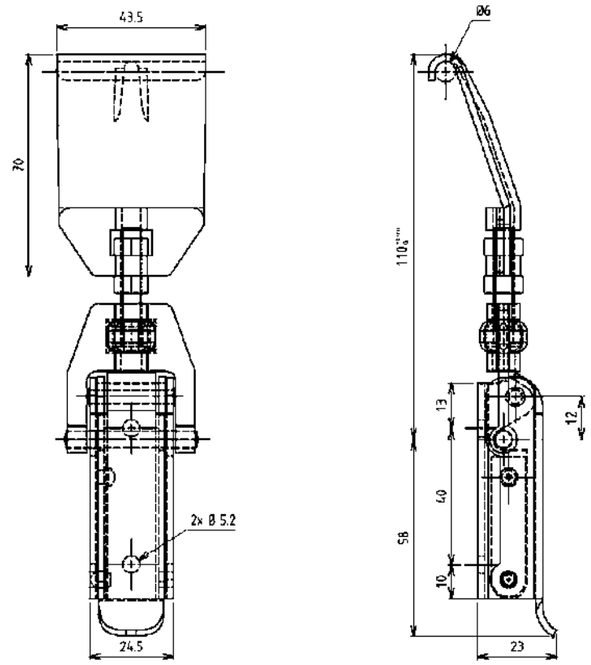

Toggle latch	Without padlock-facility
Zinc plated steel DS plus Top Coat drilled	6008_E364-JQ

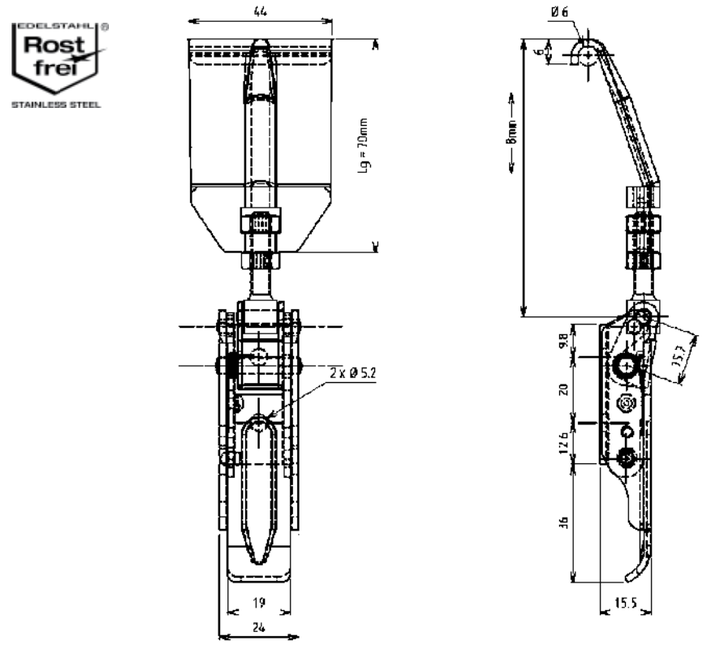

Toggle latch	Without locking latch	With locking latch
Zinc plated steel DS plus Top Coat drilled	6008_E365-JQ	6008_E865-JQ
AISI 304 drilled	6008_E365-PC	6008_E865-PC

S07 Draw Latch

Over-center · Living hinge

Standard Style

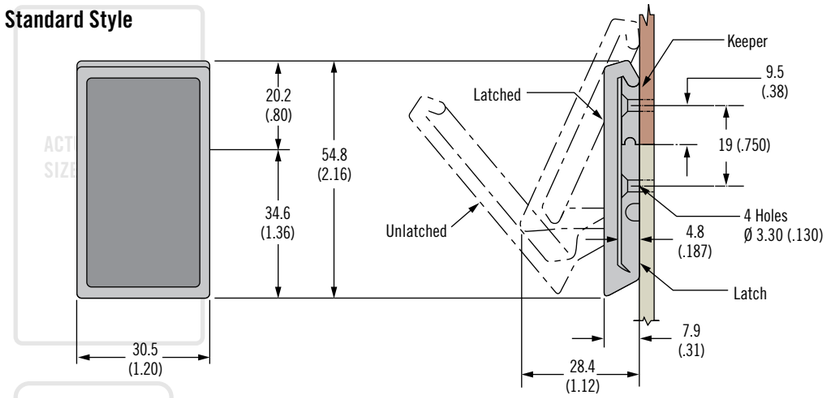

Secondary Catch Style

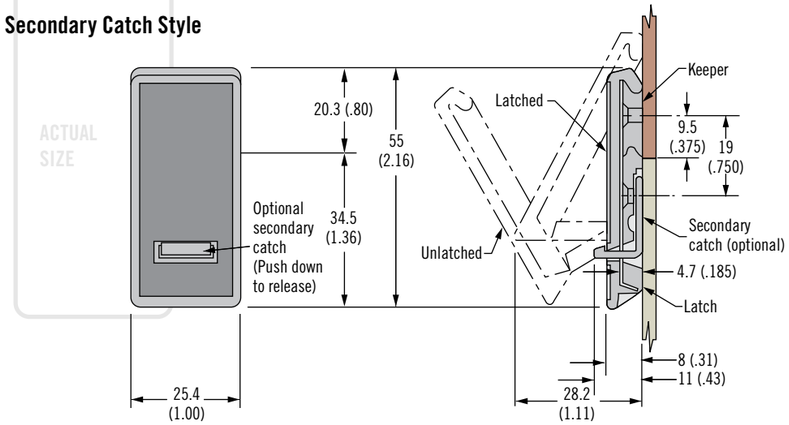

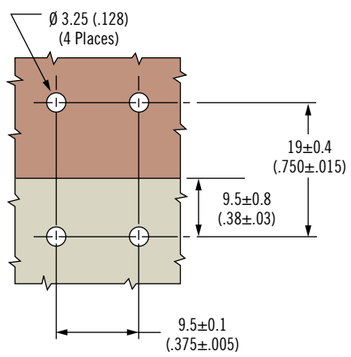

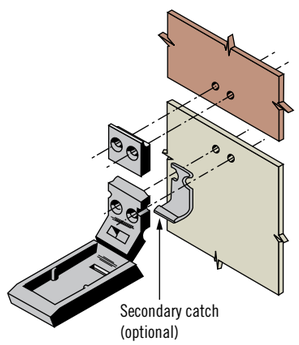

- **Low profile one piece molded latch**
- **Concealed mounting**
- **Secondary catch option to prevent accidental opening**

Material and Finish

Polypropylene black or white
Secondary catch: acetal black or red

Performance Details

Maximum working load:
Standard: 445 N (100 lbf)

Secondary catch: 310 N (70 lbf)

Operating temperature range:
0ºC to 65ºC

Flammability rating: UL94-HB

Installation Notes

Install assembly with four Ø 3 (.125) flat head rivets or M3 (No. 4) flat head screws (not supplied)

Part Number Selection

Assembly complete with keeper

B Base type
- **2** Standard
- **5** Secondary catch

S07_10_ B 01_ F

F Finish
- **11** White (standard only)
- **12** Black (standard only)
- **70** Black with red secondary catch
- **72** Black with black secondary catch

Dimensions in millimeters (inch) unless otherwise stated

S37 Draw Latch

Flexible · Over-center · Lever assist

- **Flexible body compensates for misalignment**
- **Absorbs and reduces vibration**
- **Detent lever resists accidental opening**

Material and Finish

EPDM rubber and glass-filled nylon black with stainless steel pins

Performance Details

Clamping forces up to 475N (107lbf)

Installation Notes

For ØD = 5.5, install using M5 (No. 10) screws
For ØD = 6.6, install using M6 (1/4) screws (not supplied)

Part Number

See table

Assembly complete with keeper

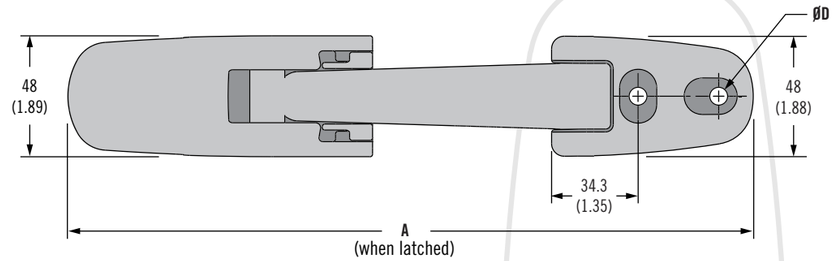

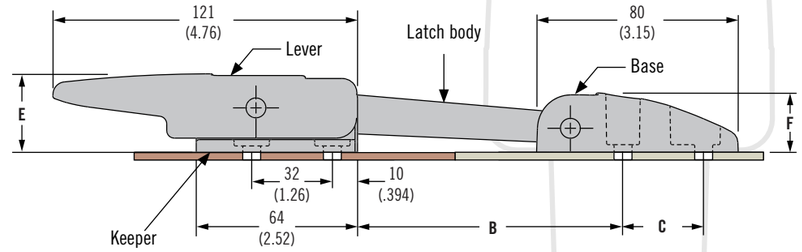

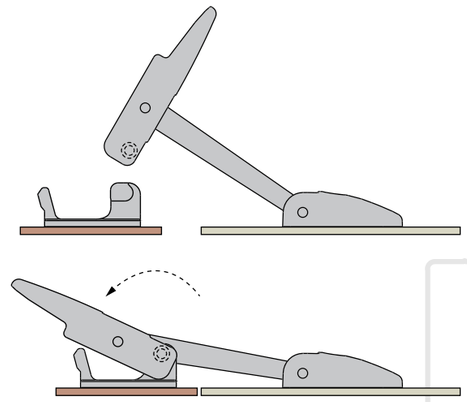

ACTUAL SIZE

Part Number	Nominal Clamp Force N (lbf)	Dimensions					
		A	B	C	Ø D	E	F
S37_30_294_60	110 (25)	254 (10)	97 (3.82)	25.4 (1.00)	5.5 (.217)	31.1 (1.22)	23.5 (.93)
S37_30_297_60	190 (43)	379 (15)	222 (8.74)				
S37_40_295_60	350 (79)	300 (12)	144 (5.67)	32 (1.25)	6.6 (.260)		
S37_40_305_60	475 (107)					38.6 (1.52)	29 (1.14)

Dimensions in millimeters (inch) unless otherwise stated

SK2 Draw Latch

Rotary · Stylized wing

- **Lift and Turn operation**
- **Consistent pull-up**

Material and Finish

Stainless steel or steel, black powder coated

Performance Details

Steel:
Maximum working load:
1230 N (275 lbf)

Stainless steel:
Maximum working load:
845 N (190 lbf)

Operating temperature range:
-40ºC to 80ºC

Installation Notes

Install assembly with Ø 4 (.157) rivets or M4 (No. 8) screws (not supplied)

Notes

Spring loaded:
Ideal for applications where shock and vibration occur. Compensates up to 1.7 (.07) for mounting hole irregularities, panel variations and gasket set. Also provides an additional allowance of 2.3 (.09) deflection when loaded.

Part Number

See table

Order latch and keeper separately

Spring Loaded

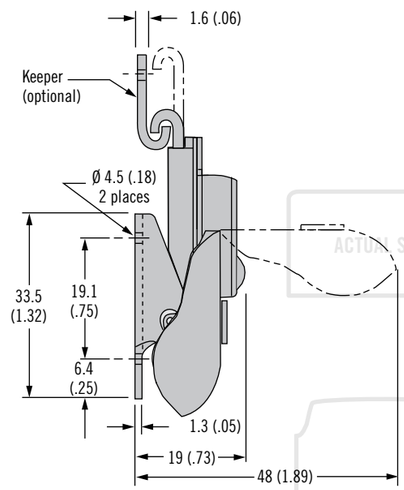

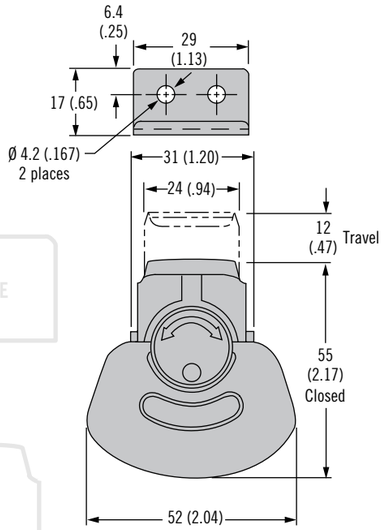

Fixed

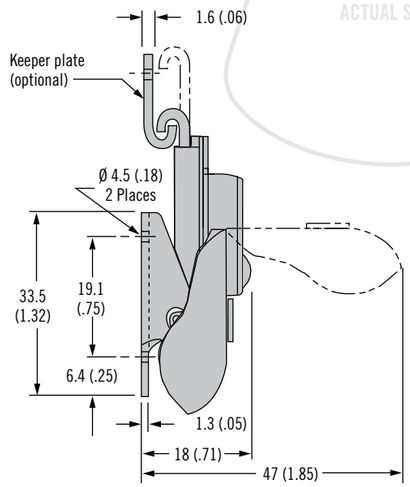

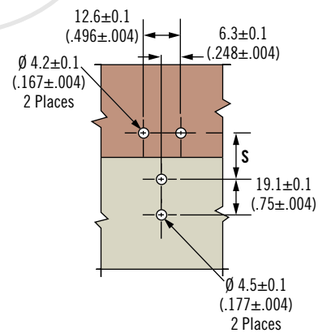

Latch	Part Number			S
	Style	Steel, Black Powder Coated	Stainless Steel	
	Spring loaded	SK2_3005_89	SK2_3005_51	$32^{+1.7}_{-0.2}$ ($1.25^{+.07}_{-.01}$)
	Fixed	SK2_3001_89	SK2_3001_51	32±0.2 (1.25±.01)
Keeper		SK4_2338_89	SK4_2338_51	

Dimensions in millimeters (inch) unless otherwise stated

SK4 Draw Latch

Rotary

Riveted

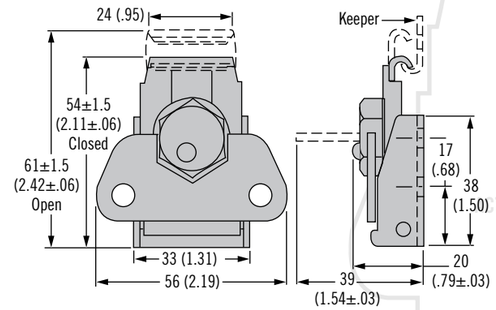

Keeper

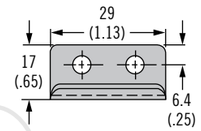

Spring Loaded

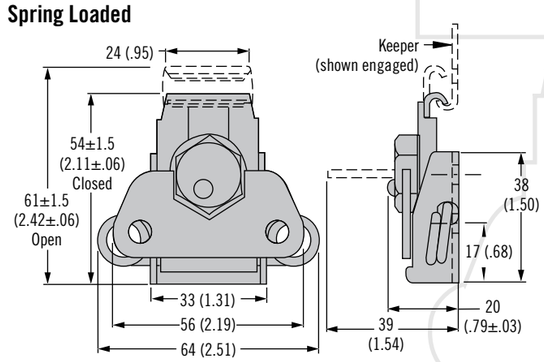

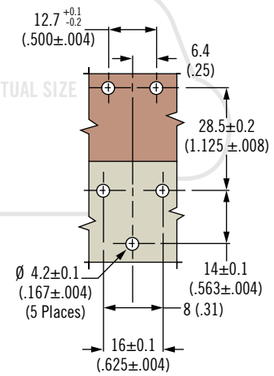

Key Lockable

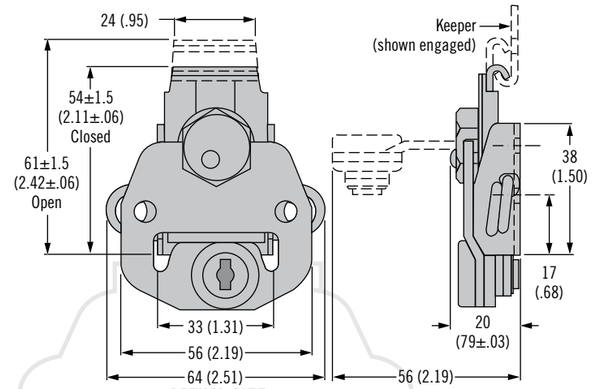

- **Lift and Turn operation**
- **Consistent pull-up**

Material and Finish

Steel, zinc plated

Installation Notes

Install assembly with Ø 4 (.157) rivets or M4 (No. 8) screws (not supplied)

Notes

Spring loaded:
Ideal for applications where shock and vibration occur. Compensates up to 4 (.156) for mounting hole irregularities, panel variations and gasket set.

Part Number

See table

Order latch and keeper separately

Type	Part Number	
	Latch	Keeper
Riveted	SK4_2714_07	K4-2338-07
Spring loaded	SK4_2359_07	
Key lockable	SK4_2833_07	

Dimensions in millimeters (inch) unless otherwise stated

SK5 Draw Latch

Rotary

SR2 Draw Latch

Concealed · Panel Fastening

Padlockable (riveted hex cam shown)

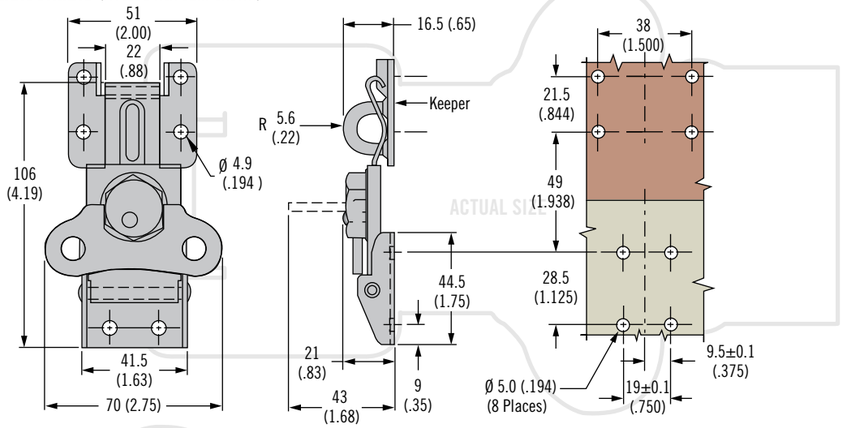

Key Lockable

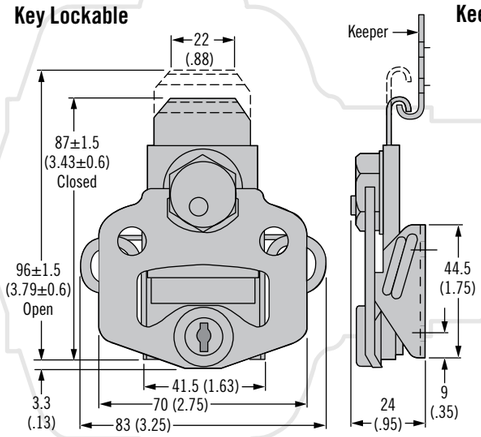

Keeper

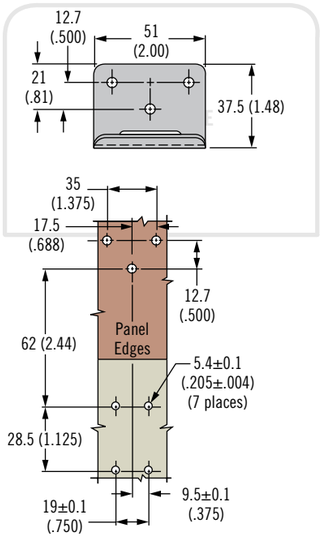

Tool Operated (spring loaded shown)

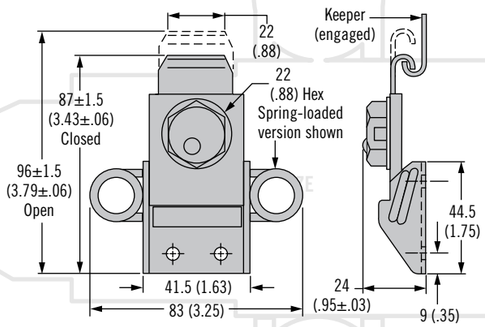

Latch Part Number	
Padlockable Riveted Hex Cam	SK5_2754_07
Padlockable Riveted Flat Cam	SK5_1993_07
Padlockable Flat Cam, Spring Loaded	SK5_1994_07
Key Lockable	SK5_2813_07
Tool Operated, Spring Loaded	SK5_2819_07
Tool Operated, Riveted	SK5_2818_07
Keeper Part Number	
Keeper	SK5_2811_07
Keeper, Padlockable	SK5_1736_07

Dimensions in millimeters (inch) unless otherwise stated

- **Lift and Turn operation**
- **Consistent pull-up**

Material and Finish

Steel, zinc plated

Installation Notes

Install assembly with Ø 5 (3/16) rivets or M5 (No. 10) flat head screws (not supplied)

Notes

Spring loaded:
Ideal for applications where shock and vibration occur. Compensates up to 4 (.16) for mounting hole irregularities, panel variations and gasket set.

Part Number

See table

Order latch and keeper separately

- **Provides a high strength concealed joint**
- **Operates quickly with a hex wrench**
- **Self adjusts to ensure a tight connection**

Material and Finish

Steel, galvanized

Performance Details

Tab, Shallow, and Mortise Mount:
Average ultimate tensile load: 6200 N (1400 lbf)

Average ultimate shear load: 8900 N (2000 lbf)

Front Mount: Average ultimate tensile load: 4000 N (900 lbf)

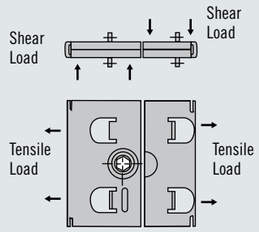

Latch

Tab Mount

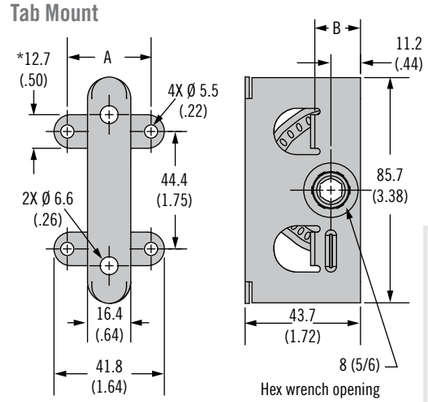

Receptacle

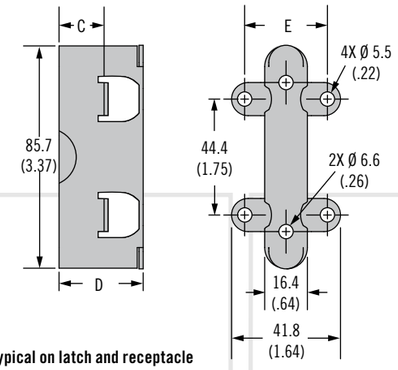

*Typical on latch and receptacle

Mortise Mount

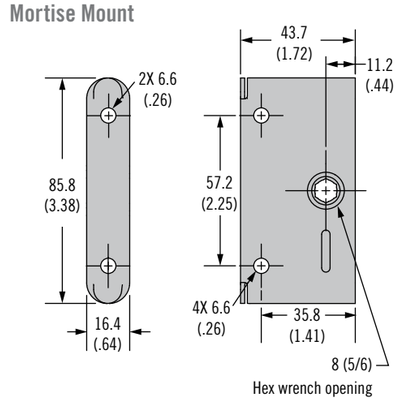

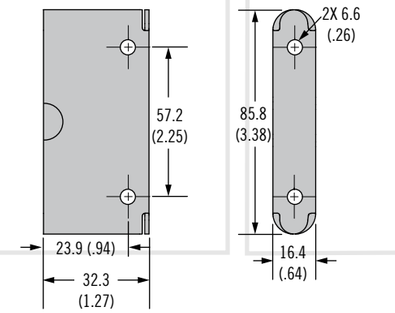

Front/Rear Mount

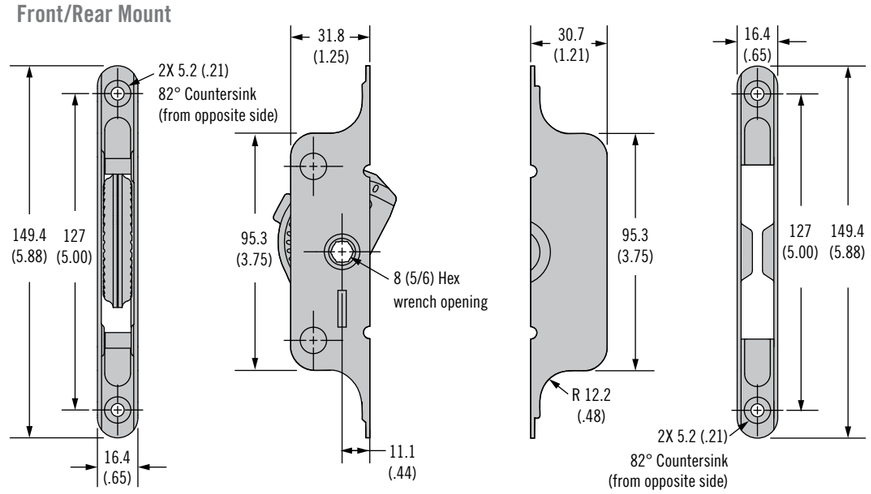

Dimensions in millimeters (inch) unless otherwise stated

SR2 Draw Latch

Concealed · Panel Fastening

Tab Mount

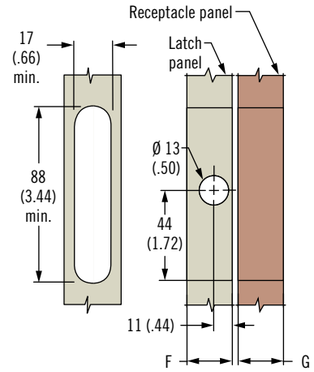

Mortise Mount

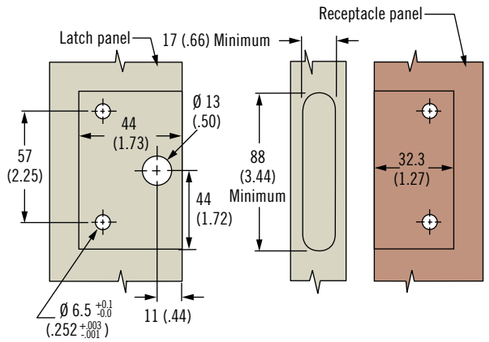

Front Mount

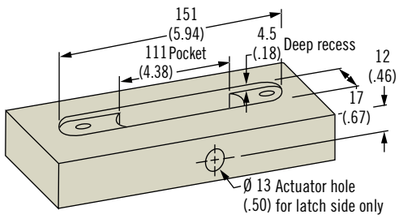

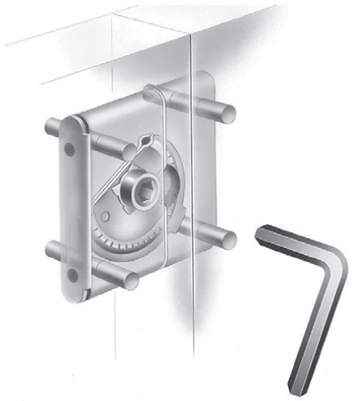

Rear Mount

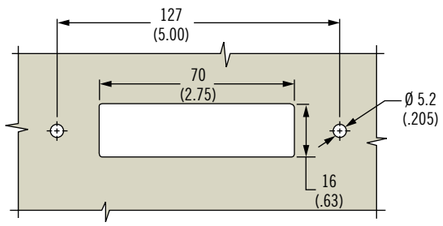

Mounting Style	Part Number		A	B	C	D	E	F	G
Shallow Tab Mount	Latch	SR2_0259_17	31.8 (1.25)	17.3 (.68)	17.3 (.68)	32.3 (1.27)	31.8 (1.25)	19 (.75)	19 (.75)
	Receptacle	SR2_0257_17							
Deep Tab Mount	Latch	SR2_0169_17	28.7 (1.13)	30.2 (1.19)	38.1 (1.50)	52.1 (2.05)	28.7 (1.13)	32 (1.25)	38 (1.5)
	Receptacle	SR2_0160_17							
Mortise Mount	Latch	SR2_0055_17							
	Receptacle	SR2_0002_17							
Front/Rear Mount	Latch	SR2_0267_17							
	Receptacle	SR2_0268_17							

Dimensions in millimeters (inch) unless otherwise stated

Installation Notes

Tab Mount: Install with Ø 5 (.205) rivets or M5 (No. 10) screws (not supplied)

Mortise Mount: Install with Ø 6 (1/4) rivets or M6 (1/4) screws (not supplied). A 1.6 (.06) gap should be maintained between latch and receptacle.

Front Mount - Wood application: Install with M5 (No. 10) flat head screws (not supplied). Note: Latch strength is dependant on mounting hardware and installation material

Rear Mount - Metal application: Install with 5 (.196) flathead rivets or M5 (No. 10) screws. Note: Maximum metal panel thickness should be 2.5 (.10)

Accessories

Actuation tool

Part number: 29-0059-02

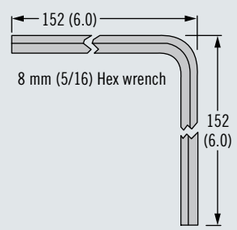

Part Number

See table

Order latch and receptacle separately

SR5 Draw Latch

Concealed · Mortise Mount

- **High tensile load**
- **Consistent pull-up**
- **Concealed installation**

Material and Finish

Steel, zinc galvanized

Performance Details

Average ultimate tensile load: 11,100 N (2500 lbf)

Average ultimate shear load: 68,180 N (15,327 lbf)

Installation Notes

Install assembly with Ø 6 (1/4) rivets or M6 (1/4) screws (not supplied)

Accessories

Actuation tool

Part number: S29_0059_02

Notes

Operating force

To open: 4 N•m (35 in•lbf)

To close: 4 N•m (35 in•lbf)

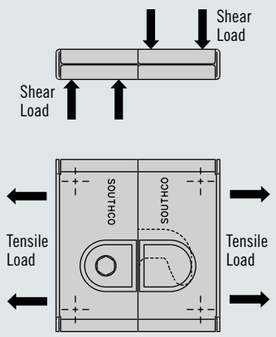

Part Number

See table

Order latch and receptacle separately

Latch

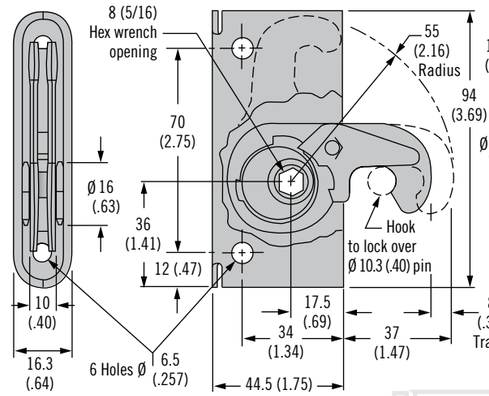

Receptacle

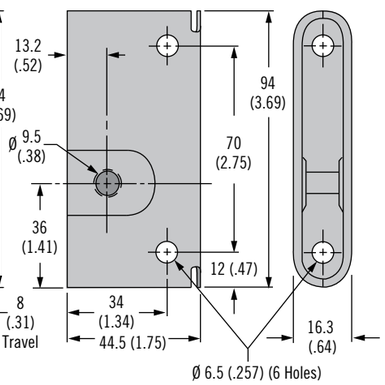

Recessed Pocket

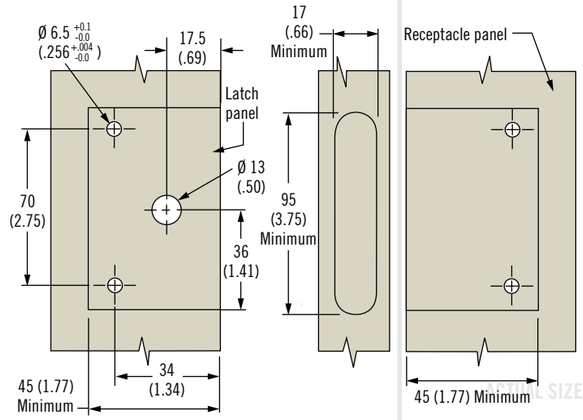

Side Mount

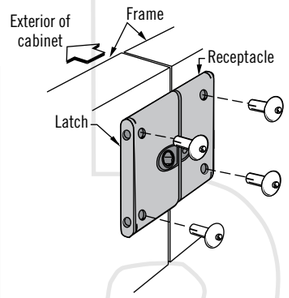

Accessories

Actuation Tool

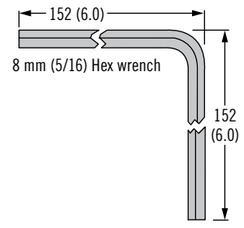

Part Number	
Latch	Receptacle
SR5_0074_17	SR5_0079_17

Dimensions in millimeters (inch) unless otherwise stated