METALIKA
COMPONENTS FOR INDUSTRY KACIN

Tečaji iz aluminija
Aluminium Hinges

METALIKA KACIN

Slovenija
(+386) 04 510 53 60
info@metalika-kacin.com
Hrvatska
(+385) 051 213 060
hrvatska@metalika-kacin.com
Srbija
(+381) 011 25 21 756
srbija@metalika-kacin.com

HINGES

	FinAlu® continuous hinge	466
	Aluminium profile continuous hinge - 50 mm	466
	Rolled knuckle continuous hinge - 20 mm width	467
NEW	Rolled knuckle continuous hinge - 25 mm width	467
NEW	Rolled knuckle continuous hinge - 30 mm width	467
	Rolled knuckle continuous hinge - 35 mm width	468
NEW	Rolled knuckle continuous hinge - 40 mm width	468
NEW	Rolled knuckle continuous hinge - 50 mm width	468
	Rolled knuckle continuous hinge - 60 mm width	469
	Rolled knuckle continuous hinge - 80 mm width	469
NEW	Rolled knuckle continuous hinge - 100 mm width	469
	Double knuckle continuous hinge	470
NEW	Spring hinges - aluminium profile 0.20 N.m	471
NEW	Spring hinges - aluminium profile 0.35 N.m	471
NEW	Spring hinges - aluminium profile 0.70 N.m	472
NEW	Spring hinges - aluminium profile 1.3 N.m	472
	Spring hinges - aluminium profile 3.80 N.m	473
NEW	Spring hinges 50 mm long	473
NEW	Opening spring hinges 120 mm long	474
NEW	Closing spring hinges 120 mm long	474
	Small friction hinges - adjustable	475
	Large friction hinges - adjustable	475
	One way torque hinge - constant torque 9 N.m / set	476
	Hi-Klik™ detent hinges - small	477
	Hi-Klik™ detent hinges - large	477
NEW	Soft-close dampening hinges in aluminium	478
	Round top weld-on aluminium hinges - stainless steel pin - stainless steel washer	479
	Aluminium profile hinges	480
	Heavy duty aluminium profile hinges	480
	Aluminium hinges - 50 mm width	481
	Aluminium hinges with reversed leaves - 50 mm width	481
	Clean room hinge 65 x 60 mm	482
	Clean room hinge 100 x 60 mm	482
	Clean room lift-off hinges 65 x 60 mm	483
	Aluminium lift-off hinges 80 x 80 mm	483
	Aluminium lift-off hinges 100 x 85 mm	484
	Aluminium lift-off hinges 100 x 100 mm	484
NEW	Lift-off hinges in aluminium profile with a stainless steel pin	485

LATCHING SYSTEMS

NEW	Springloaded bolt with locking system in aluminium	486
NEW	Barrel bolt in aluminium	486

HANDLES

	Rear mounted grab handles 92 and 108 mm	487
	Rear mounted grab handles 52 to 120 mm	487
	Black aluminium rear mounted grab handles 75 to 150 mm	488
	Black aluminium rear mounted grab handles 88 to 120 mm	488
	Flush handles 105 x 63.5 mm	489
	Flush handle 120 x 91 mm	489

ACCESSORIES

NEW	Soft closing recessed hook	490
NEW	Bracket for soft closing recessed hook	490
NEW	Spring loaded recessed hook	491
NEW	Bracket for spring loaded recessed hook	491
	Aluminium mini slides	492

INDEX - ALUMINIUM RANGE

www.METALIKA-KACIN.com

www.METALIKA-KACIN.com

FinAlu® continuous hinge

Continuous hinges in aluminium profile with a small pin diameter.
This nice design can be used in many applications (medical, electronic enclosures, food equipment, transportation...).
These hinges have the same dimensions as hinges used in the aircraft industry.

Part number	Material	Finish	A	B	C	D	E	Pin material	Note	Weight (g)
72-1-4243	6082 T5 alu	anodised	915	31.75	1.3	2.2	12.7	stainless steel	undrilled	150
72-1-4244	6082 T5 alu	raw	1830	31.75	1.3	2.2	12.7	stainless steel	undrilled	300
72-1-4245	6082 T5 alu	anodised	915	44.45	1.3	2.2	12.7	stainless steel	undrilled	190
72-1-4246	6082 T5 alu	raw	1830	44.45	1.3	2.2	12.7	stainless steel	undrilled	380
72-1-4247	6082 T5 alu	anodised	915	63.5	1.3	2.2	12.7	stainless steel	undrilled	250
72-1-4248	6082 T5 alu	raw	1830	63.5	1.3	2.2	12.7	stainless steel	undrilled	500

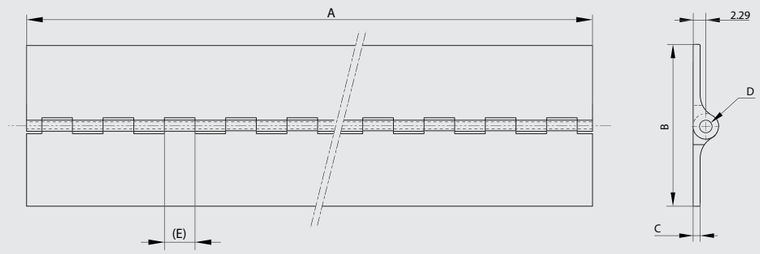

Aluminium profile continuous hinge - 50 mm

Opening angle 270°. Other lengths are available on request.
Specific drilling requirements are also available on request.

Part number	Material	Finish	A	B	C	D	E	Pin material	Note	Weight (g)
72-1-3316	6060 T5 alu	raw	2000	50	3	5.2	35.5	304 stainless steel	undrilled	1200

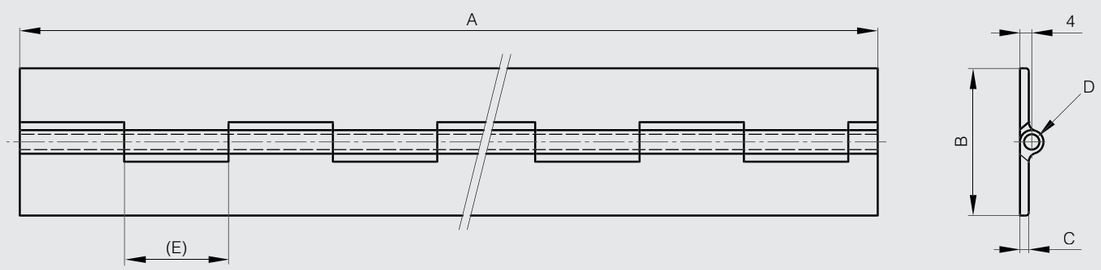

Rolled knuckle continuous hinge - 20 mm width

Opening angle 270°. Other lengths and pin materials are available on request.
Specific drilling requirements are also available on request.

Part number	Material	Finish	A	B	C	D	E	Pin material	Note	Weight (g)
41-1-3529	5754 alu	raw	2000	20	0.6	2.4	15	steel	undrilled	117

Rolled knuckle continuous hinge - 25 mm width

Opening angle 270°. Other lengths and pin materials are available on request.
Specific drilling requirements are also available on request.
Hinge in raw galvanised steel is made of pregalvanised steel. Therefore any cut surface is ungalvanised.

	Part number	Material	Finish	A	B	C	D	E	Pin material	Note	Weight (g)
NEW	**41-1-3559**	5754 alu	raw	1000	25	0.8	2	15	steel	undrilled	88

Rolled knuckle continuous hinge - 30 mm width

Opening angle 270°. Other lengths and pin materials are available on request.
Specific drilling requirements are also available on request.

	Part number	Material	Finish	A	B	C	D	E	Pin material	Note	Weight (g)
NEW	**41-1-3560**	5754 alu	raw	1980	30	1	2	15	aluminium	undrilled	205

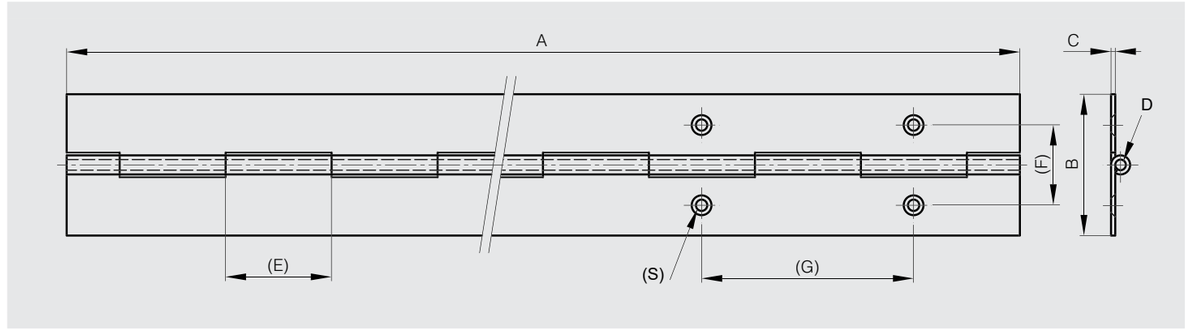

www.METALIKA-KACIN.com

Rolled knuckle continuous hinge - 35 mm width

270° ALU RoHS

Opening angle 270°. Other lengths and pin materials are available on request.
Specific drilling requirements are also available on request.

Part number	Material	Finish	A	B	C	D	E	Pin material	Note	Weight (g)
41-1-3532	5754 alu	raw	1995	35	1	3	30	aluminium	undrilled	232

Rolled knuckle continuous hinge - 40 mm width

NEW

270° ALU RoHS

Opening angle 270°. Other lengths and pin materials are available on request.
Specific drilling requirements are also available on request.

	Part number	Material	Finish	A	B	C	D	E	Pin material	Note	Weight (g)
NEW	**41-1-3540**	5754 alu	raw	1000	40	1.2	3	30	aluminium	undrilled	178
	41-1-3520	5754 alu	raw	2040	40	1.2	3	30	aluminium	undrilled	356
	41-1-3521	5754 alu	raw	2000	40	1.5	4	15	aluminium	undrilled	500

Rolled knuckle continuous hinge - 50 mm width

NEW

270° ALU RoHS

Opening angle 270°. Other lengths and pin materials are available on request.
Specific drilling requirements are also available on request.

	Part number	Material	Finish	A	B	C	D	E	Pin material	Note	Weight (g)
	41-1-3531	5754 alu	raw	2040	50	1.2	3	30	aluminium	undrilled	459
NEW	**41-1-3541**	5754 alu	raw	1000	50	1.5	4	15	aluminium	undrilled	306
	41-1-3522	5754 alu	raw	2000	50	1.5	4	15	aluminium	undrilled	612

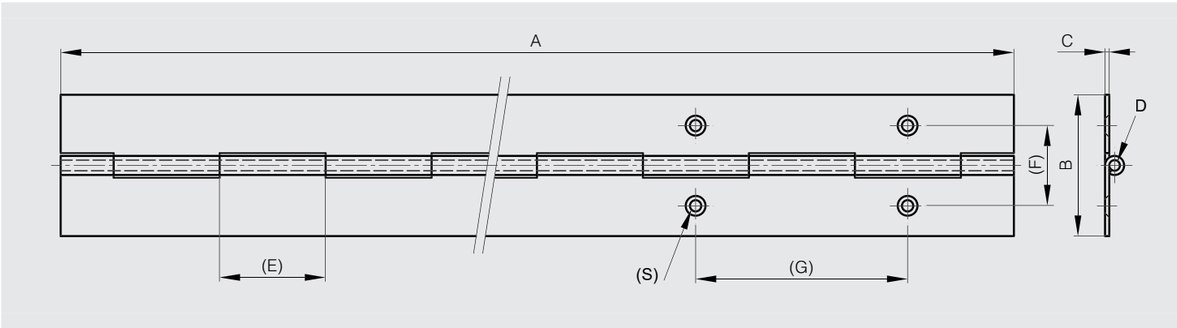

Rolled knuckle continuous hinge - 60 mm width

270° ALU RoHS

Opening angle 270°. Other lengths and pin materials are available on request.
Specific drilling requirements are also available on request.

Part number	Material	Finish	A	B	C	D	E	Pin material	Note	Weight (g)
41-1-3523	5754 alu	raw	1995	60	2	6	30	aluminium	undrilled	998

Rolled knuckle continuous hinge - 80 mm width

270° ALU RoHS

Opening angle 270°. Other lengths and pin materials are available on request.
Specific drilling requirements are also available on request.

Part number	Material	Finish	A	B	C	D	E	Pin material	Note	Weight (g)
41-1-3558	5754 alu	raw	1995	80	3	6	40	aluminium	undrilled	1780

Rolled knuckle continuous hinge - 100 mm width

NEW

270° ALU RoHS

Opening angle 270°. Other lengths and pin materials are available on request.
Specific drilling requirements are also available on request.

	Part number	Material	Finish	A	B	C	D	E	Pin material	Note	Weight (g)
NEW	**41-1-3561**	5754 alu	raw	1000	100	4	10	40	steel	undrilled	2030

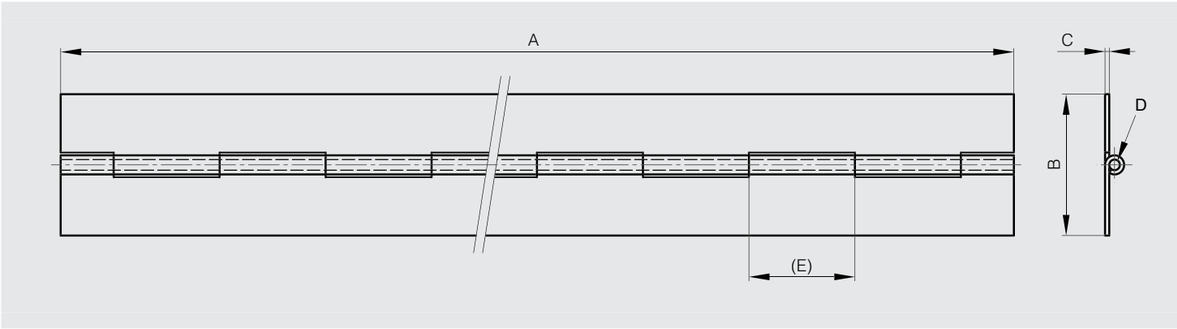

www.METALIKA-KACIN.com

Double knuckle continuous hinge

180° ALU RoHS

Hinge in aluminium profile for 180° opening angle.
Delivered without watertight gasket (to be ordered separately).
With fixed friction washers.
Non-drilled hinges.

Part number	Material	Finish	A	D	K	Pin material	Weight (g)
73-1-3520	6060 T5 alu	clear anodised	2000	5	65	304 stainless steel	2500
73-1-3521	6060 T5 alu	clear anodised	2500	5	15	304 stainless steel	3140
73-1-3522	6060 T5 alu	clear anodised	3000	5	115	304 stainless steel	3780

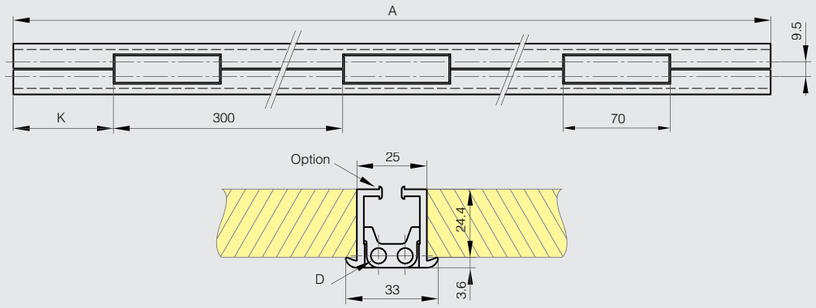

www.METALIKA-KACIN.com

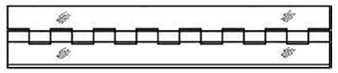

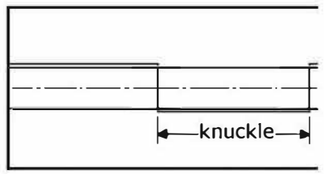

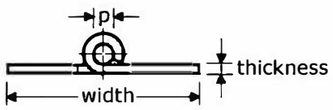

4551-2510
4551-4015
4551-4020
4551-5015
4551-6020
4551-8020

piano hinges
aluminium (AlMg3)
flat rolled, without screwholes
with (fixed) aluminium pin
knuckles 30mm (for thickness 1,0mm: knuckles 15mm)

length	width	thick	pin (p)	in boxes of
3500mm	25mm	1,0mm	1,75 aluminium	105 Mtr
3500mm	40mm	1,5mm	3mm aluminium	52,5 Mtr
3500mm	40mm	2,0mm	6mm aluminium	35 Mtr
3500mm	50mm	1,5mm	3mm aluminium	52,5 Mtr
3500mm	60mm	2,0mm	6mm aluminium	35 Mtr
3500mm	80mm	2,0mm	6mm aluminium	17,5 Mtr

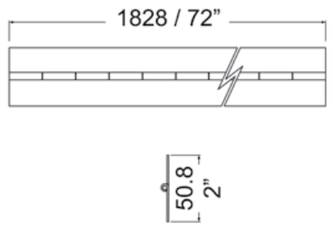

Lightweight Aluminium Hinges.
1.83m / 72" Length. Leaf Width 50.8mm / 2"
Also available **Punched**

Material: 1.2mm / 18 gauge Aluminium

Part No.	*Finish*	*Description*	*Weight*
P1350	Aluminium	Plain	0.39kg/0.86lb
P1350P	Aluminium	**Punched** on 76.2mm / 3" centres	0.38kg/0.84lb

www.METALIKA-KACIN.com

Typ 76 Stangenscharniere (Gelenkbänder oder Haubenscharniere) aus Aluminium, mit Aluminium-Stift, nach DIN 7956 Form A, in Herstellungslängen von 3500 mm, mit Senklöchern

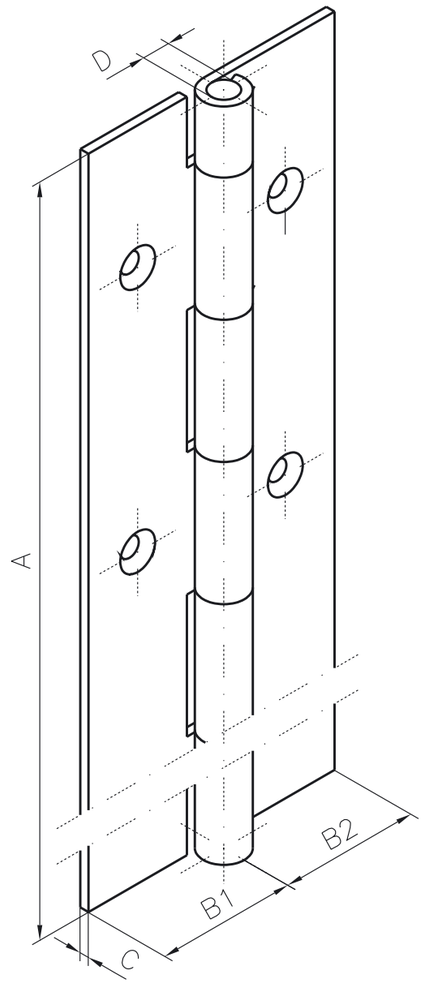

768 15 .. Aluminium, gelocht

Artikel-Nr.:	A	B1	B2	C	D	Loch-abstand	Loch-durchmesser	Gewerbe-teilung
	mm	mm	mm	mm	mm		mm	mm
... .. 04	3500	16	16	1,0	1,75	60	3,75	15

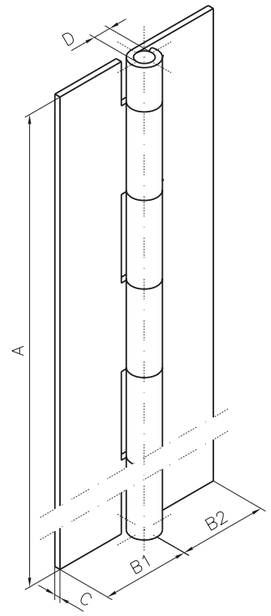

767 15 .. Aluminium, ungelocht

Artikel-Nr.:	A	B1	B2	C	D	Gewerbe-teilung
	mm	mm	mm	mm	mm	mm
... .. 12	3500	12,5	12,5	1,0	1,75	15
... .. 14	3500	16	16	1,0	1,75	15
... .. 21	3500	16	16	1,25	2,5	30
... .. 22	3500	20	20	1,25	2,5	30
... .. 23	3500	25	25	1,25	2,5	30
... .. 41	3500	16	16	1,5	3	30
... .. 42	3500	20	20	1,5	3	30
... .. 44	3500	25	25	1,5	3	30
... .. 45	3500	30	30	1,5	3	30
... .. 61	3500	20	20	2	6	30
... .. 62	3500	25	25	2	6	30
... .. 63	3500	30	30	2	6	30
... .. 81	3500	20	20	3	6	30
... .. 82	3500	25	25	3	6	30

www.METALIKA-KACIN.com
www.METALIKA-KACIN.com

Spring hinges - aluminium profile 0.20 N.m

NEW

180° ALU RoHS

Opening spring force:
M(0°): 0.23 N.m / M(90°): 0.15 N.m / M(180°): 0.08 N.m.
Closing spring force:
M(0°): 0.08 N.m / M(90°): 0.15 N.m / M(180°): 0.23 N.m.
2 other versions available: with friction or with detent mechanism.

	Part number	Material	Finish	A	B	C	D	Note	Weight (g)
	72-1-4256	6060 T5 alu	clear anodised	30	35	3.3	8	opening spring	10
	72-1-4257	6060 T5 alu	black anodised	30	35	3.3	8	opening spring	10
NEW	72-1-4275	6060 T5 alu	clear anodised	30	35	3.3	8	closing spring	10
NEW	72-1-4276	6060 T5 alu	black anodised	30	35	3.3	8	closing spring	10

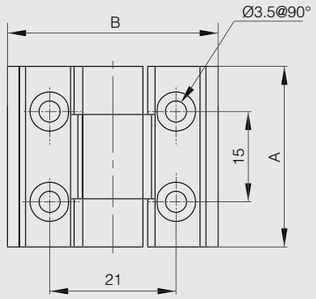

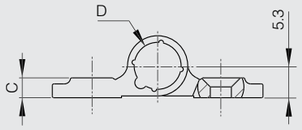

Spring hinges - aluminium profile 0.35 N.m

NEW

180° ALU RoHS

Opening spring force:
M(0°): 0.35 N.m / M(90°): 0.24 N.m / M(180°): 0.12 N.m.
Closing spring force:
M(0°): 0.12 N.m / M(90°): 0.24 N.m / M(180°): 0.35 N.m.
3 other versions available: free swinging, with friction or with detent mechanism.

	Part number	Material	Finish	A	B	C	D	Note	Weight (g)
	72-1-4220	6060 T5 alu	clear anodised	67	55	4.5	13	opening spring	60
	72-1-4221	6060 T5 alu	black anodised	67	55	4.5	13	opening spring	60
NEW	72-1-4292	6060 T5 alu	clear anodised	67	55	4.5	13	opening spring/ delivered flat	60
NEW	72-1-4293	6060 T5 alu	black anodised	67	55	4.5	13	opening spring/ delivered flat	60
NEW	72-1-4286	6060 T5 alu	clear anodised	67	55	4.5	13	closing spring	60
NEW	72-1-4287	6060 T5 alu	black anodised	67	55	4.5	13	closing spring	60

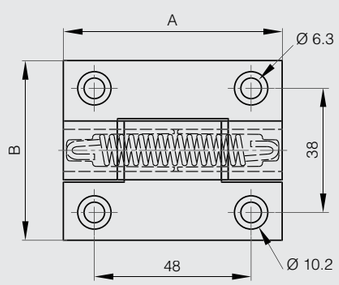

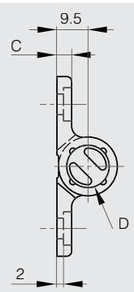

Spring hinges - aluminium profile 0.70 N.m

NEW

180° ALU RoHS

Opening spring force:
M(0°): 0.7 N.m / M(90°): 0.45 N.m / M(180°): 0.23 N.m.
Closing spring force:
M(0°): 0.23 N.m / M(90°): 0.45 N.m / M(180°): 0.7 N.m.
3 other versions available: free swinging, with friction or with detent mechanism.

	Part number	Material	Finish	A	B	C	D	Note	Weight (g)
	72-1-4218	6060 T5 alu	clear anodised	67	55	4.5	13	opening spring	65
	72-1-4219	6060 T5 alu	black anodised	67	55	4.5	13	opening spring	65
NEW	72-1-4294	6060 T5 alu	clear anodised	67	55	4.5	13	opening spring / delivered flat	65
NEW	72-1-4295	6060 T5 alu	black anodised	67	55	4.5	13	opening spring / delivered flat	65
NEW	72-1-4272	6060 T5 alu	clear anodised	67	55	4.5	13	closing spring	65
NEW	72-1-4273	6060 T5 alu	black anodised	67	55	4.5	13	closing spring	65

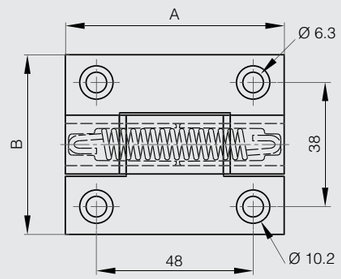

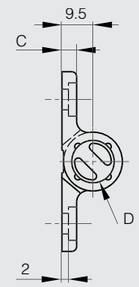

Spring hinges - aluminium profile 1.3 N.m

NEW

180° ALU RoHS

Opening spring force:
M(0°): 1.3 N.m / M(90°): 1.1 N.m / M(180°): 0.9 N.m.
Closing spring force:
M(0°): 0.9 N.m / M(90°): 1.1 N.m / M(180°): 1.3 N.m.

3 other versions available: free swinging, with friction or with detent mechanism.

	Part number	Material	Finish	A	B	C	D	Note	Weight (g)
	72-1-4222	6060 T5 alu	clear anodised	67	55	4.5	13	opening spring	67
	72-1-4223	6060 T5 alu	black anodised	67	55	4.5	13	opening spring	67
NEW	72-1-4296	6060 T5 alu	clear anodised	67	55	4.5	13	opening spring / delivered flat	67
NEW	72-1-4297	6060 T5 alu	black anodised	67	55	4.5	13	opening spring / delivered flat	67
	72-1-4260	6060 T5 alu	clear anodised	67	55	4.5	13	closing spring	67
	72-1-4261	6060 T5 alu	black anodised	67	55	4.5	13	closing spring	67

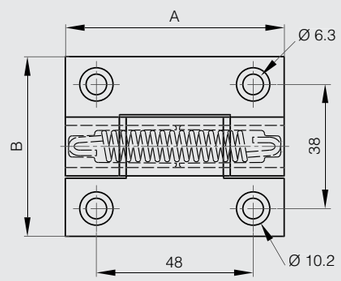

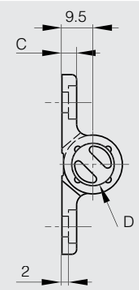

www.METALIKA-KACIN.com

Spring hinges - aluminium profile 3.80 N.m

180° ALU RoHS

Opening spring force:
M(0°): 3.80 N.m / M(90°): 3.10 N.m / M(180°): 2.40 N.m.
Closing spring force:
M(0°): 2.20 N.m / M(90°): 2.90 N.m / M(180°): 3.50 N.m.

Free swinging hinge without spring available (part number: 72-1-4241 in colorless or 72-1-4242 in black).

Part number	Material	Finish	A	B	C	D	Note	Weight (g)
72-1-4231	6082 T5 alu	clear anodised	100	82.5	5.5	24	opening spring	183
72-1-4232	6082 T5 alu	black anodised	100	82.5	5.5	24	opening spring	183
72-1-4258	6082 T5 alu	clear anodised	100	82.5	5.5	24	closing spring	183
72-1-4259	6082 T5 alu	black anodised	100	82.5	5.5	24	closing spring	183

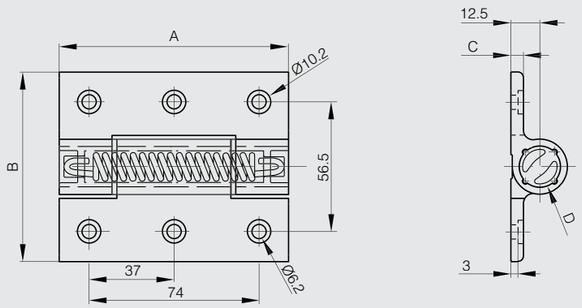

Spring hinges 50 mm long

NEW

270° ALU RoHS

Opening spring force:
M(0°): 1.5 N.m / M(90°): 1.1 N.m / M(180°): 0.65 N.m.

Closing spring force:
M(0°): 0.25 N.m / M(90°): 0.65 N.m / M(180°): 1.1 N.m.

	Part number	Material	Finish	A	B	C	D	F	G	S	Note	Weight (g)
NEW	71-1-3856	5754 alu	raw	50	50	2	4	9	30	5	Bezinal steel opening spring	22
NEW	71-1-3857	5754 alu	raw	50	50	2	4	9	30	5	Bezinal steel closing spring	22

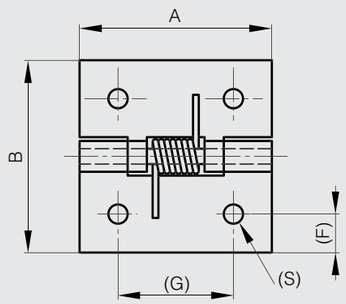

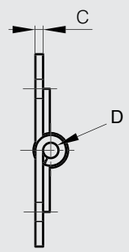

Opening spring hinges 120 mm long

NEW

270° ALU RoHS

Opening spring force:
M(0°): 0.85 N.m / M(90°): 0.56 N.m / M(180°): 0.28 N.m.
Stainless steel spring.

	Part number	Material	Finish	A	B	C	D	F	G	S	Note	Weight (g)
NEW	71-1-3860	5754 alu	raw	120	40	1.5	4				undrilled	45
NEW	71-1-3861	5754 alu	raw	120	40	1.5	4	22.7	60	4	drilled	45

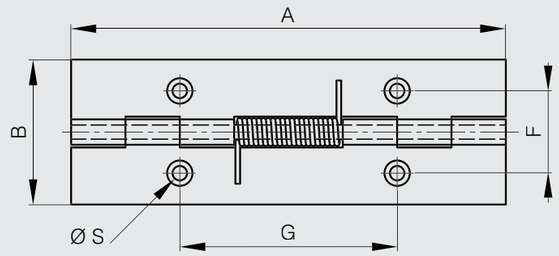

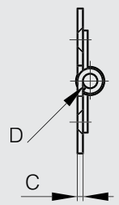

Closing spring hinges 120 mm long

NEW

270° ALU RoHS

Closing spring force:
M(0°): 0.28 N.m / M(90°): 0.56 N.m / M(180°): 0.85 N.m.
Stainless steel spring.

	Part number	Material	Finish	A	B	C	D	F	G	S	Note	Weight (g)
NEW	71-1-3862	5754 alu	raw	120	40	1.5	4				undrilled	45
NEW	71-1-3863	5754 alu	raw	120	40	1.5	4	22.7	60	4	drilled	45

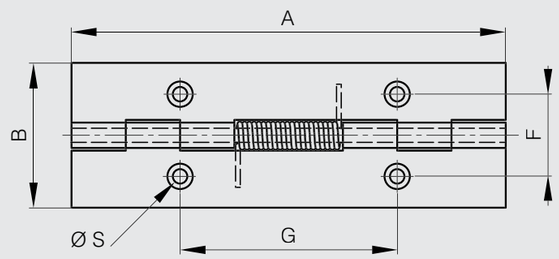

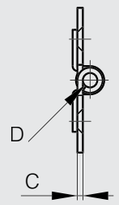

Small friction hinges - adjustable

180° ALU RoHS

Small size friction hinge to maintain a lid / door in position.
The friction torque is adjustable with a hex key.
2 other versions available: with spring or with detent function.
A full product data sheet is available on our website.

Part number	Material	Finish	A	B	C	D	S	Torque	Weight (g)
72-1-4136	6060 T5 alu	raw	30	35	3	8	3.5	0 - 1 N.m	10
72-1-4160	6060 T5 alu	clear anodised	30	35	3	8	3.5	0 - 1 N.m	10
72-1-4137	6060 T5 alu	black anodised	30	35	3	8	3.5	0 - 1 N.m	10

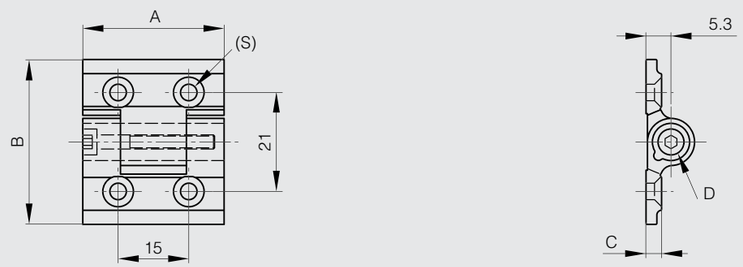

Large friction hinges - adjustable

180° ALU RoHS

Large size friction hinge to maintain a lid / door in position.
The friction torque is adjustable with a hex key.
Available with a choice of studs or holes.
3 other versions available: with spring, with detent function or free swinging.
A full product data sheet is available on our website.

Part number	Material	Finish	A	B	C	D	Torque	Note	Weight (g)
72-1-4145	6060 T5 alu	clear anodised	65	55	4.5	13	0 - 5 N.m	fixing by screw CHC M6	66
72-1-4146	6060 T5 alu	black anodised	65	55	4.5	13	0 - 5 N.m	fixing by screw CHC M6	66
72-1-4147	6060 T5 alu	clear anodised	65	55	4.5	13	0 - 5 N.m	fixing by M6 studs	78
72-1-4148	6060 T5 alu	black anodised	65	55	4.5	13	0 - 5 N.m	fixing by M6 studs	78

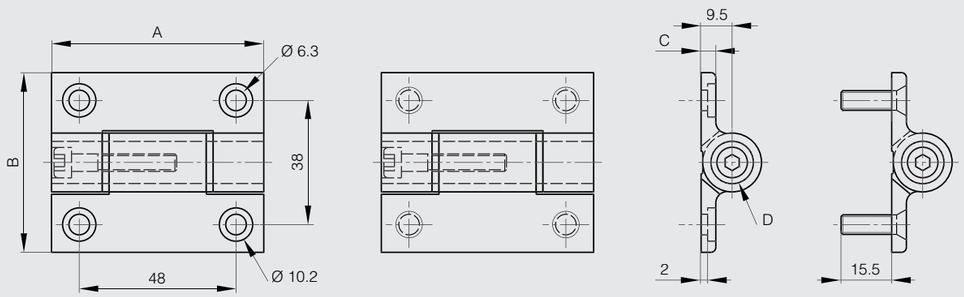

Aluminium range - Hinges www.metalika-kacin.com
Hinges with dual function

One way torque hinge - constant torque 9 N.m / set

270° ALU

- Aluminium torque hinge.
- Friction in one direction only: allows for frictionless handling of the door inthe opposite direction.
- Tested over 30,000 cycles.
- Torque is constant in torque direction.
- Sold in pairs (left / right).
- Ideal to prevent shock to the door and / or safety.
- Torque moment (per set): 9 N.m.
- Initial torque may vary from -20% to +40%.
- Not suited for vibration environment.
- Torque will be affected by temperature.
- Do not lubricate.
- For indoor use only.
- Body in aluminium, shaft in stainless steel, sleeve and cover in polyacetal (POM).

Part number	Material	Finish	A	B	C	D	Torque	Note	Weight (g)
72-7-4250	aluminium	anodised	77.5	60	16	21	9 N.m / set	torque in the clockwise direction sold in pairs	270
72-7-4251	aluminium	anodised	77.5	60	16	21	9 N.m / set	torque in the anti clockwise direction sold in pairs	270

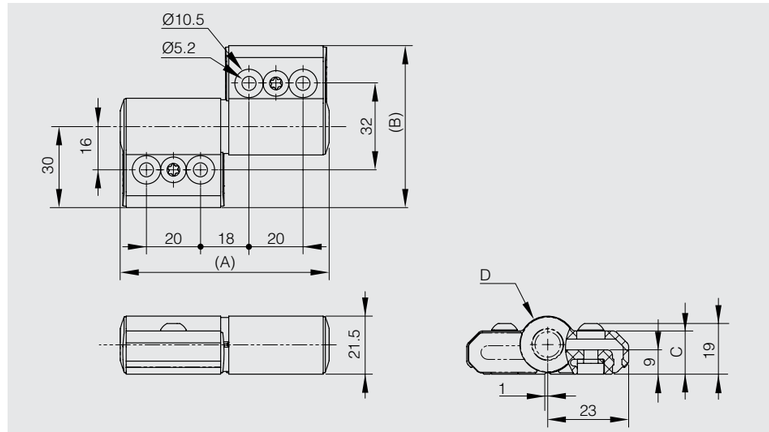

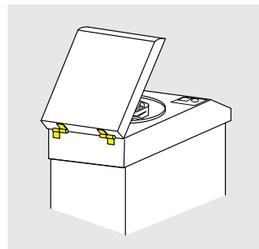

Installation

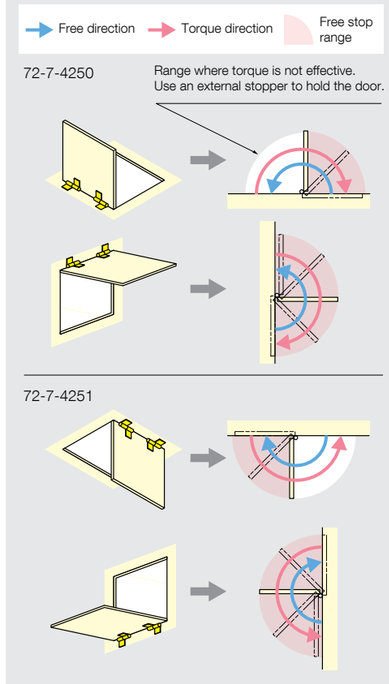

www.METALIKA-KACIN.com

Hi-Klik™ detent hinges - small

270° ALU RoHS

Indented every 30°.
Torque is preset.
2 different versions available: with spring or with friction mechanism.

Part number	Material	Finish	A	B	C	D	Torque	Weight (g)
72-1-4235	6060 T5 alu	clear anodised	30	35	3.3	8	0.4 N.m	10
72-1-4236	6060 T5 alu	black anodised	30	35	3.3	8	0.4 N.m	10

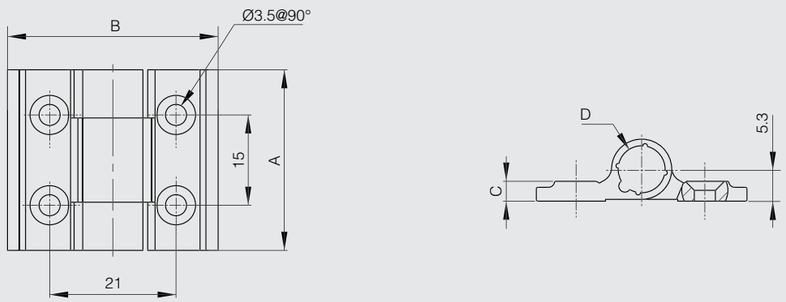

Hi-Klik™ detent hinges - large

270° ALU RoHS

Indented every 30°. 4 torque values.
Torque is preset.
3 other versions available: free swinging, with spring or with friction mechanism.
A full product data sheet is available on our website.

Part number	Material	Finish	A	B	C	D	Torque	Weight (g)
72-1-4197	6060 T5 alu	black anodised	67	55	4.5	13	1.8 N.m	106
72-1-4198	6060 T5 alu	black anodised	67	55	4.5	13	2.5 N.m	106
72-1-4225	6060 T5 alu	black anodised	67	55	4.5	13	3.2 N.m	106
72-1-4233	6060 T5 alu	black anodised	67	55	4.5	13	5 N.m	106

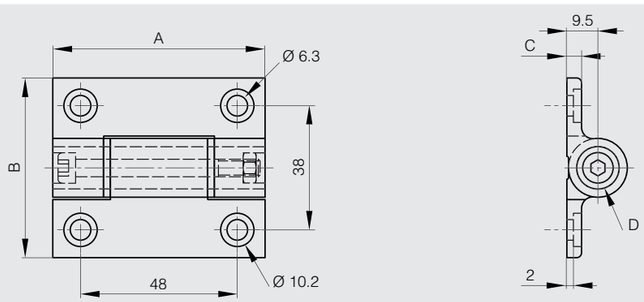

Aluminium range - Hinges www.metalika-kacin.com
Hinges with dual function

Soft-close dampening hinges in aluminium

NEW

115° ALU

- Soft-close dampening hinge: soft-close damper keeps lid from slamming shut when the hinge is put in the open position.
- Damper working direction: shown by the arrow in the drawing.
- Operating angle: 115°.
- If the opening angle is wider than 115° (+/- 5°), mechanism is broken and damper doesn't work any longer.
- **Provide a door stopper to prevent from overturning beyond the prescribed angle range.**
- Do not force the door to close faster in damper effective direction. It can cause damage to the product.
- When the door opening angle is small, the dampers may not work smoothly.
- Torque moment (for one hinge): 2.5 to 4.5 N.m.
- Torque calculation:

Torque (N.m) = L (m) x 1/2 x W (kg) x 9.8 with:
• L = door height in metre.
• W = door weight in kilo.
- Operating temperature: 0 to +40°C.
- Soft close of a door (vertical application): door closing system.

Put together with a spring hinge with same dimension (72-1-4231 or 72-1-4232), an automatic soft close of a door is possible without any other component.
Please ask us for more information.

	Part number	Material	Finish	A	B	C	D	Torque	Note	Weight (g)
	75-1-0004	6082 T5 alu	clear anodised	100	82.5	5.5	18	2.5 - 4.5 N.m	Damper working direction when opening the hinge	242
NEW	**75-1-0006**	6082 T5 alu	clear anodised	100	82.5	5.5	18	2.5 - 4.5 N.m	Damper working direction when closing the hinge	242

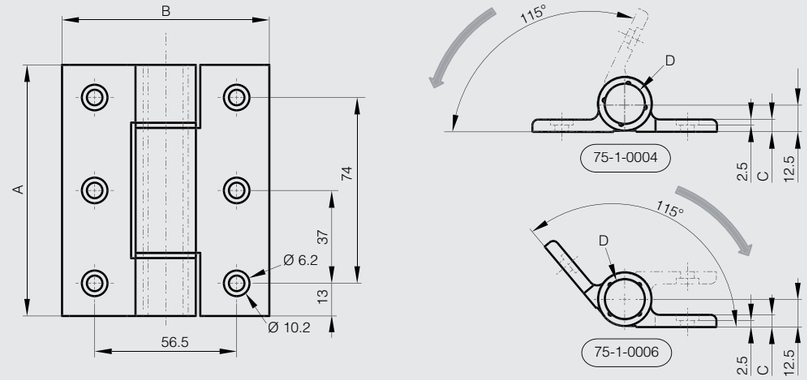

www.METALIKA-KACIN.com
www.METALIKA-KACIN.com

Round top weld-on aluminium hinges - stainless steel pin - stainless steel washer

180° ALU

Part number	Material	Finish	A	B	C	D	Weight (g)
14-7-3815	aluminium	raw	60	12	10	6	20
14-7-3816	aluminium	raw	80	16	13	8	40
14-7-3817	aluminium	raw	100	20	16	10	75
14-7-3818	aluminium	raw	120	20	16	11	93
456517	aluminium	raw	150	25	20	13	117
456518	aluminium	raw	180	25	20	14	138

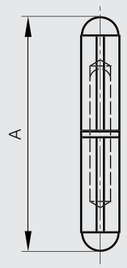

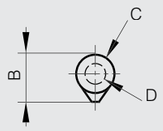

www.METALIKA-KACIN.com

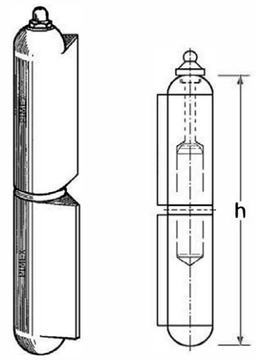

weld-on hinges
aluminium (AlMg Si 0,5)
profile with welding point, top rounded head
with stainless steel (screwed) grease/lubricating nipple
with oil room & oil canal
with fixed (in under part) pin stainless steel 303/1.4305
with massive washer stainless steel 303/1.4305

	high	profile	fixed pin	in boxes of
456-562	80mm	16x13mm	ø 8mm	20 Pcs
456-564	100mm	20x16mm	ø10mm	20 Pcs
456-565	120mm	20x16mm	ø11mm	100 Pcs
456-567	150mm	25x20mm	ø13mm	10 Pcs

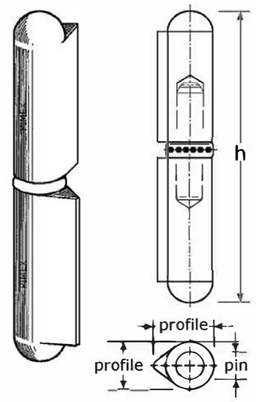

weld-on hinges
aluminium (AlMg Si 0,5)
profile with welding point, top rounded head
for left and right use
with fixed (in under part) pin stainless steel 303/1.4305
with ball bearing stainless steel 304/1.4301
(outside & inside SS-304/A2, balls SS-420 harded)

	high	profile	fixed pin	D	in boxes of
456-584	104mm	20x16mm	ø10mm	ø17,5mm	20 Pcs
456-587	155mm	25x20mm	ø13mm	ø22mm	10 Pcs

www.METALIKA-KACIN.com

Aluminium profile hinges

180° ALU RoHS

This hinge has the same footprint and design as our friction, detent and spring hinges.
All are fully interchangeable.
Plastic pin with or without end caps.

Part number	Material	Finish	A	B	C	D	Note	Weight (g)
72-1-4212	6060 T5 alu	clear anodised	65	55	4.5	13	without cap	130
72-1-4213	6060 T5 alu	black anodised	65	55	4.5	13	without cap	130
72-1-4214	6060 T5 alu	clear anodised	65	55	4.5	13	with cap	130
72-1-4215	6060 T5 alu	black anodised	65	55	4.5	13	with cap	130

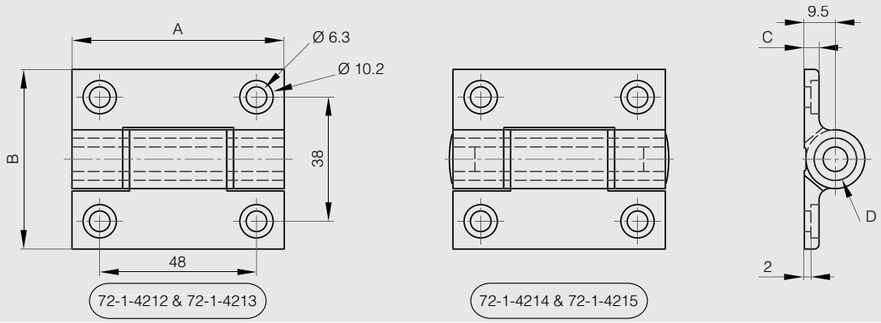

Heavy duty aluminium profile hinges

270° ALU RoHS

Free swinging hinge.
It has the same footprint and design as the spring hinge for heavy duty applications (part numbers: 72-1-4231, 72-1-4232, 72-1-4258 and 72-1-4259).
All are fully interchangeable.

Part number	Material	Finish	A	B	C	D	Weight (g)
72-1-4241	6082 T5 alu	clear anodised	100	82.5	5.5	24	148
72-1-4242	6082 T5 alu	black anodised	100	82.5	5.5	24	148

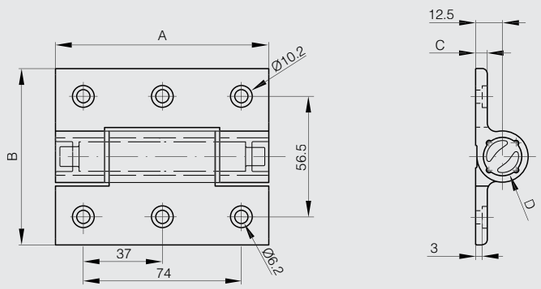

Aluminium hinges - 50 mm width

270° ALU RoHS

Hinge with 304 stainless steel riveted pin.

Part number	Material	Finish	A	B	C	D	Weight (g)
72-1-3635	6060 T5 alu	raw	32	50	3	5.2	20
72-1-3636	6060 T5 alu	raw	50	50	3	5.2	30

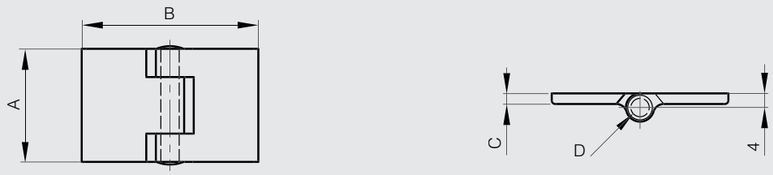

Aluminium hinges with reversed leaves - 50 mm width

270° ALU RoHS

Hinge with 304 stainless steel riveted pin.

Part number	Material	Finish	A	B	C	D	Weight (g)
72-1-3637	6060 T5 alu	raw	32	50	3	5.2	20
72-1-3638	6060 T5 alu	raw	50	50	3	5.2	30

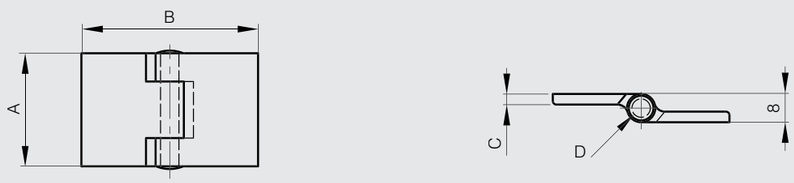

www.METALIKA-KACIN.com

Clean room hinge 65 x 60 mm

270° ALU RoHS

No metal-to-metal contact. Polyacetal bushings minimize particles.
Door size: max. W600 x L800.
Door weigh: max. 13 kg/pair.
303 stainless steel pin.

Part number	Material	Finish	A	B	C	D	E	S	Weight (g)
72-7-4252	aluminium	anodised	65	60	3.5	5	8	5.5	50

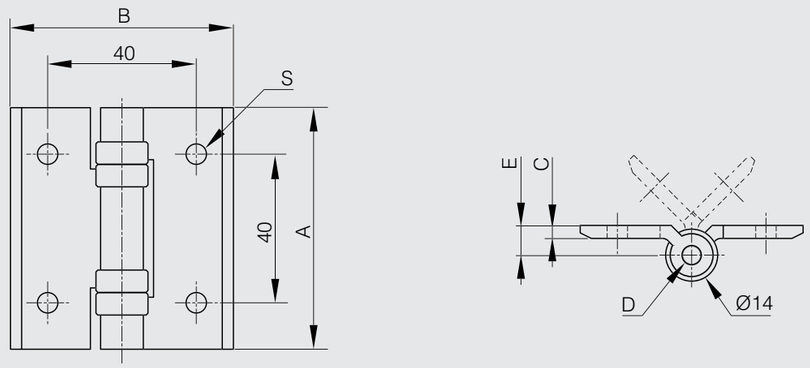

Clean room hinge 100 x 60 mm

270° ALU RoHS

No metal-to-metal contact. Polyacetal bushings minimize particles.
Door size: max. W600 x L800.
Door weight: max. 13 kg/pair.
303 stainless steel pin.

Part number	Material	Finish	A	B	C	D	E	S	Weight (g)
72-7-4253	aluminium	anodised	100	60	3.5	5	8	5.5	78

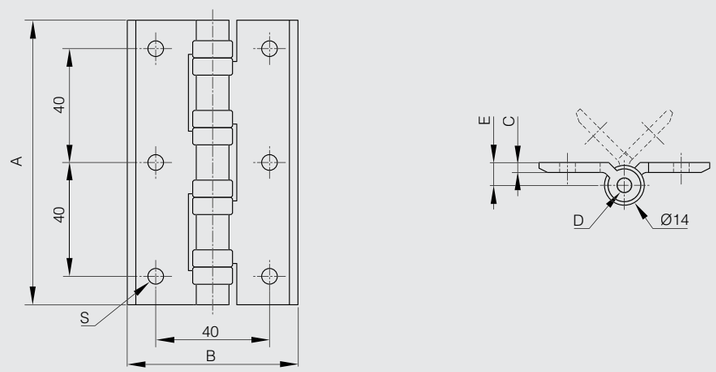

Clean room lift-off hinges 65 x 60 mm

270° ALU RoHS

No metal-to-metal contact. Polyacetal bushings minimize particles.
Door size: max. W600 x L800.
Door weight: max. 8 kg/pair.
303 stainless steel pin.

Part number	Material	Finish	A	B	D	G	S	Note	Weight (g)
14-7-3877	aluminium	anodised	65	60	5	40	5.5	type 1	49
14-7-3878	aluminium	anodised	65	60	5	40	5.5	type 2	49

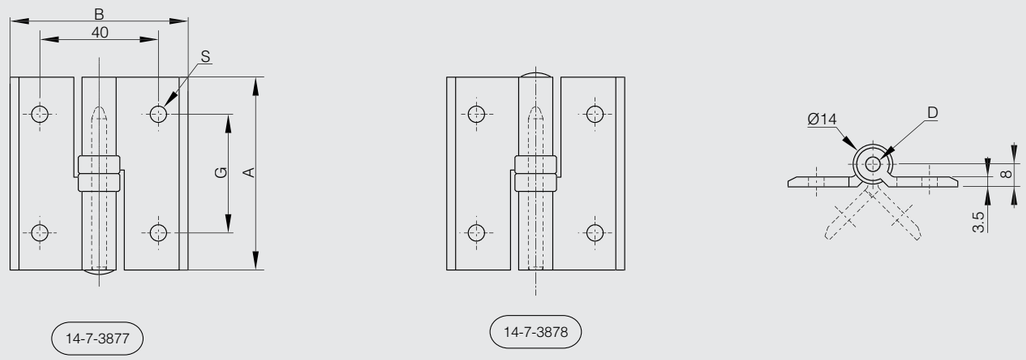

Aluminium lift-off hinges 80 x 80 mm

270° ALU RoHS

Zinc plated steel pin.
Nylon bushing.

Part number	Material	Finish	A	B	C	D	S	Note	Weight (g)
14-7-3624	aluminium	anodised silver	80	80	3.5	8	5.5	type 1	85
14-7-3625	aluminium	anodised silver	80	80	3.5	8	5.5	type 2	85

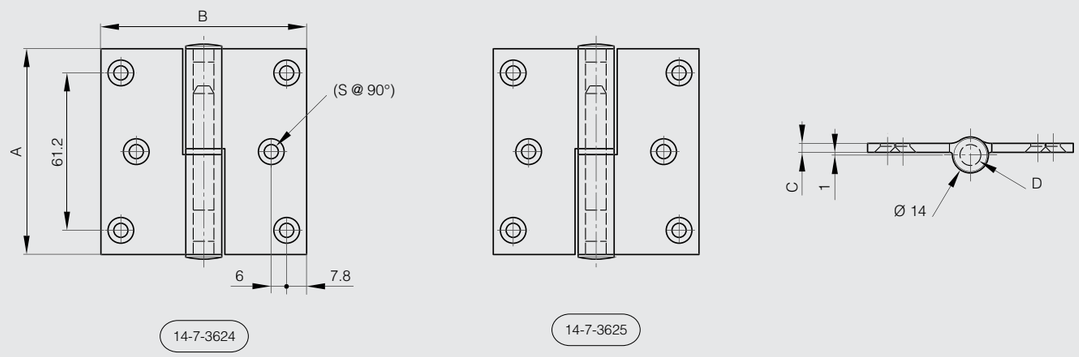

www.METALIKA-KACIN.com

Aluminium lift-off hinges 100 x 85 mm

270° ALU RoHS

Zinc plated steel pin.
Nylon bushing.

Part number	Material	Finish	A	B	C	D	S	Note	Weight (g)
14-7-3626	aluminium	anodised silver	100	85	3.5	9	5.5	type 1	99
14-7-3627	aluminium	anodised silver	100	85	3.5	9	5.5	type 2	99

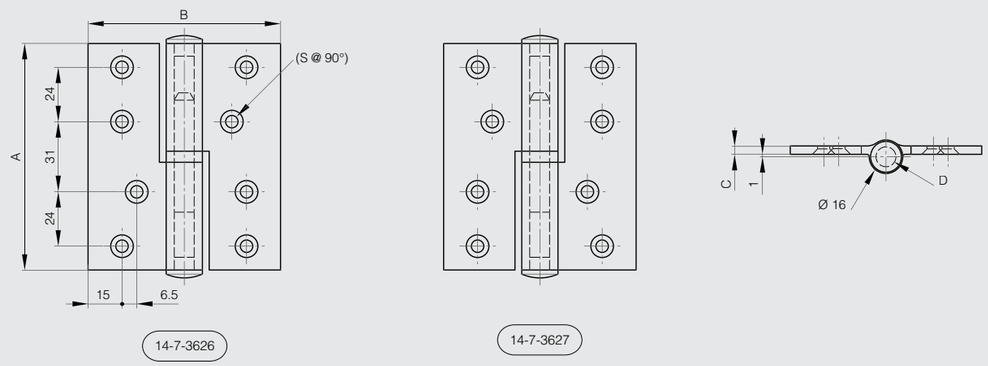

Aluminium lift-off hinges 100 x 100 mm

270° ALU RoHS

Zinc plated steel pin.
Nylon bushing.

Part number	Material	Finish	A	B	C	D	S	Note	Weight (g)
14-7-3628	aluminium	anodised silver	100	100	4	9	6	type 1	106
14-7-3629	aluminium	anodised silver	100	100	4	9	6	type 2	106

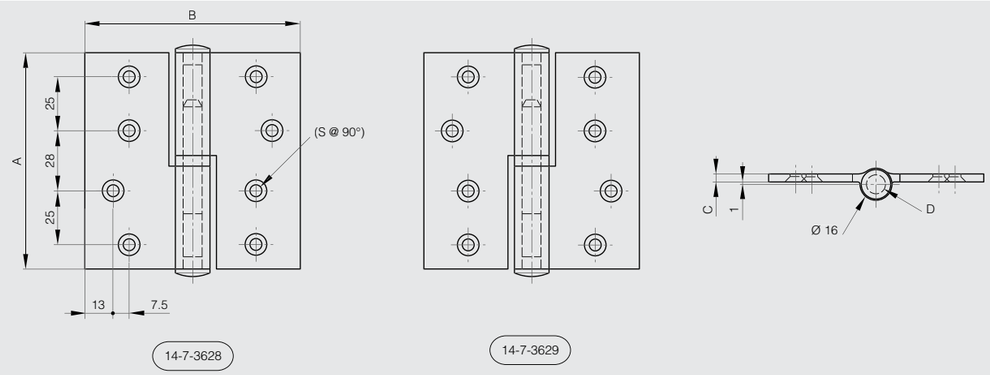

Lift-off hinges in aluminium profile with a stainless steel pin

NEW

270° ALU RoHS

Stainless steel pin.
Supplied with polymer caps.

	Part number	Material	Finish	A	B	C	D	E	Note	Weight (g)
NEW	**12-1-4283**	6060 T5 alu	clear anodised	102	45.9	2.5	6.1	50	type 1	50
NEW	**12-1-4286**	6060 T5 alu	clear anodised	102	45.9	2.5	6.1	50	type 2	50
NEW	**12-1-4284**	6060 T5 alu	black anodised	102	45.9	2.5	6.1	50	type 1	50
NEW	**12-1-4287**	6060 T5 alu	black anodised	102	45.9	2.5	6.1	50	type 2	50

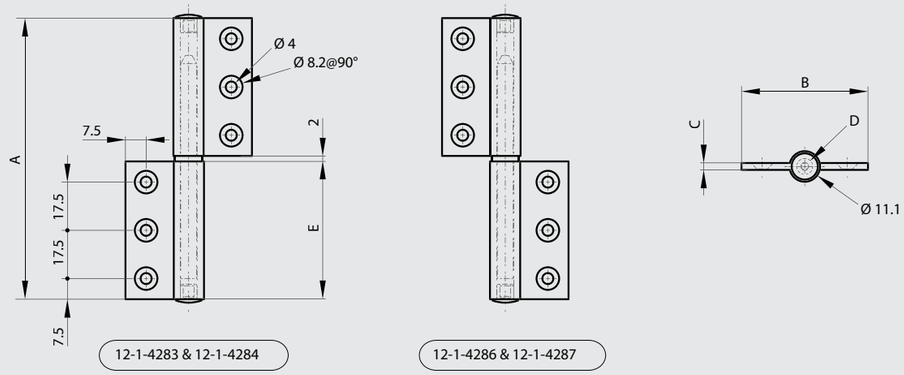

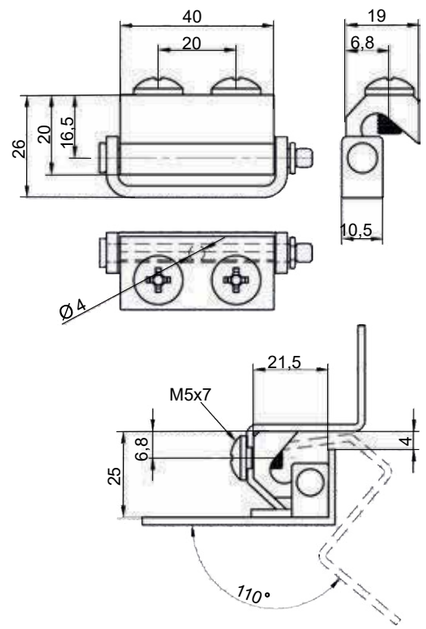

PART NUMBER	COMPONENTS	MATERIAL
3538.001	Holder	Steel copper plated
	Base	Aluminum zinc plated

www.METALIKA-KACIN.com

Hinges

Aluminium

INOX STAINLESS STEEL RoHS

SPECIFICATION

Types

- Type **A**: 2x2 bores for countersunk screws
- Type **C**: 2x2 threaded studs

Aluminium **AL**
anodized, natural colour **EL**
Pin, Stainless Steel AISI 316Ti
Threaded stud (Type C), Stainless Steel AISI 316

INFORMATION

GN 237 hinges are characterized by their compact and stable design.

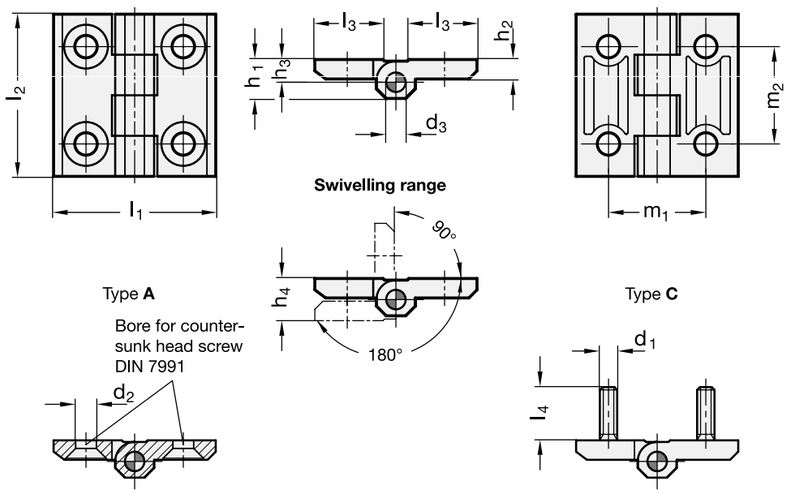

Description	l1	l2	d2	d3	h1	h2	h3	h4 +0.5	l3	m1	m2	⚖
GN 237-AL-30-30-A-EL	30	30	4.3	3	7.5	4	4.5	8.5	10.7	18	18	11
GN 237-AL-40-40-A-EL	40	40	5.3	4	9	5	5.5	11	14	25	25	24
GN 237-AL-50-50-A-EL	50	50	6.4	6	11.5	6	6.5	13	18.5	30	30	48
GN 237-AL-60-60-A-EL	60	60	8.3	8	15	8	8.5	17	21.5	36	36	90

Hinges

Aluminium

RoHS

MATERIAL

Anodised aluminium, natural colour, matte finish.

ROTATING PIN

AISI 304 stainless steel.

STANDARD EXECUTION

Pass-through holes for countersunk head screws.

ROTATION ANGLE (APPROXIMATE VALUE)

Max 270° (-90° and +180° being 0° the condition where the two interconnected surfaces are on the same plane).
Do not exceed the rotation angle limit so as not to prejudice the hinge mechanical performance.

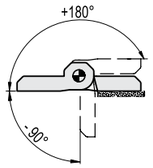

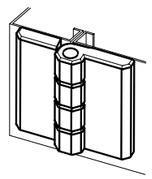

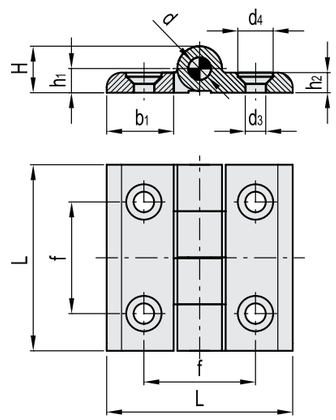

Code	Description	L	d3	d4	f	H	h1	h2	b1	d	⚖
428649	CMM-AL-40-SH-5	40	5.5	10.5	25	10.5	5.5	5	17	4	25
428651	CMM-AL-50-SH-5	50	5.5	10.5	30	12.5	6.5	6	22	6	50
428652	CMM-AL-50-SH-6	50	6.5	12.5	30	12.5	6.5	6	22	6	47
428655	CMM-AL-60-SH-8	60	8.5	16.5	36	16.5	8.5	8	25	8	94

www.METALIKA-KACIN.com
www.METALIKA-KACIN.com

Hinges for thin doors

Aluminium

MATERIAL
Anodized aluminium, black or natural colour, matte finish.

ROTATING PIN
AISI 304 stainless steel.

GUIDE BUSHINGS FOR PIN
Polyamide based (PA) technopolymer.

ASSEMBLY SCREWS
Stainless steel self-tapping screws 4.8x15.9 DIN 7982 (frame side) and stainless steel M5x10 semi-rounded head screws (door side). Included in the supply.

STANDARD EXECUTIONS
- **CMDX-AL-P**: with bodies on the same plane.
- **CMDX-AL-R**: with raised body.
- **CMDX-AL-PS**: with bodies on the same plane, opening to the left side.
- **CMDX-AL-RS**: with raised body, opening to the left side.
- **CMDX-AL-PD**: with bodies on the same plane, opening to the right side.
- **CMDX-AL-RD**: with raised body, opening on the right side.

Index for finish:
- **AN**: anodised in natural colour.
- **AB**: anodised in black colour.

FEATURES AND APPLICATIONS
The hinge is made up of two bodies with different dimensions (a narrow one and a larger one) and can be assembled for example on structures with thin frame or door. Supplied not assembled for an easy fixing.

ELESA Original design

ROTATION ANGLE (APPROXIMATE VALUE)
Max 185° (-5° and +180° being 0° the condition where the two hinged surfaces are on the same plane).
Do not exceed the rotation angle limit so as not to damage the hinge.

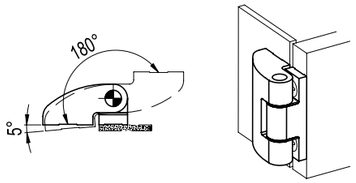

CMDX-AL-P
CMDX-AL-R

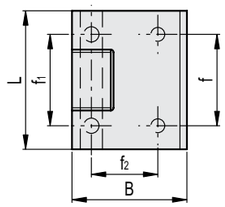

CMDX-AL-PS
CMDX-AL-RS

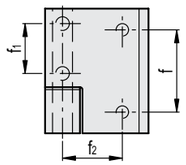

CMDX-AL-PD
CMDX-AL-RD

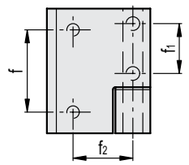

CMDX-AL-P

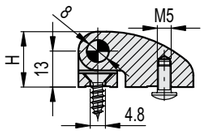

CMDX-AL-R

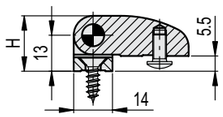

CMDX-AL-PS **CMDX-AL-RS** **CMDX-AL-PD** **CMDX-AL-RD**

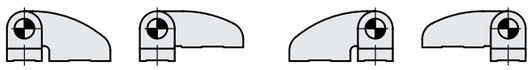

Code	Description	Code	Description	L	B	f	f1	f2	H	⚖
428321	CMDX-AL-P-50-AN	428322	CMDX-AL-P-50-AB	50	41.5	33	33	24	20	94
428325	CMDX-AL-P-70-AN	428326	CMDX-AL-P-70-AB	70	41.5	50	50	24	20	132
428329	CMDX-AL-P-90-AN	428330	CMDX-AL-P-90-AB	90	41.5	70	70	24	20	170
428341	CMDX-AL-R-50-AN	428342	CMDX-AL-R-50-AB	50	41.5	33	33	24	20	85
428345	CMDX-AL-R-70-AN	428346	CMDX-AL-R-70-AB	70	41.5	50	50	24	20	120
428349	CMDX-AL-R-90-AN	428350	CMDX-AL-R-90-AB	90	41.5	70	70	24	20	154
428366	CMDX-AL-PS-50-AN	428367	CMDX-AL-PS-50-AB	50	41.5	33	20	24	20	92
428376	CMDX-AL-RS-50-AN	428377	CMDX-AL-RS-50-AB	50	41.5	33	20	24	20	83
428361	CMDX-AL-PD-50-AN	428362	CMDX-AL-PD-50-AB	50	41.5	33	20	24	20	92
428371	CMDX-AL-RD-50-AN	428372	CMDX-AL-RD-50-AB	50	41.5	33	20	24	20	83

www.METALIKA-KACIN.com

Aluminium range - Hinges
Various hinges

Hinges

for aluminum profiles, with guide step

SPECIFICATION

Types
- Type **A**: exterior hinge wings
- Type **I**: interior hinge wings

Identification no.
- No. **C**: with countersunk holes

Aluminum **EL**
anodized, natural color

Bearing bushing / cover cap
- Plastic, Technopolymer (Polyamide PA)
- gray, RAL 7035

Tapered dowel pin ISO 8741
Steel zinc plated, blue passivated

INFORMATION
GN 2292 Hinges are made of drawn profiled aluminum and are used on doors and covers, for example. The guide step allows them to be quickly and easily mounted to all commercially available profile systems with a nominal size of 40 mm and groove width "n". Given the external hinge wing, type A hinges allow mounting with a very small door gap. The type I is fastened in the door gap. The mounting screws are therefore inaccessible and hence protected from vandalism when the door is closed.
The hinges are delivered loose and must be mounted according to the accompanying instructions. Any hinge combination may be realized thanks to the modular design and available accessories.

TECHNICAL INFORMATION
- Plastic characteristics (see page A2)

ON REQUEST
- other lengths and hole spacings
- other finishes

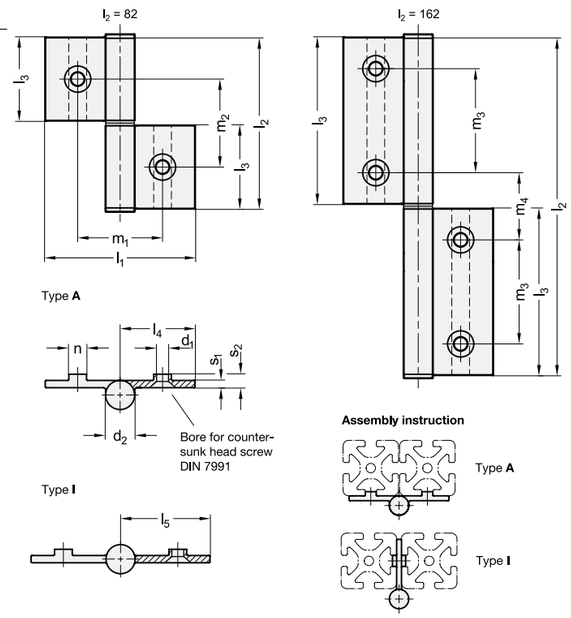

GN 2292

Description	l1	l2	d1	d2	l3	l4	l5	m1	m2	m3	m4	n -0.3	s1	s2	⚖
GN 2292-72-82-A-C-EL	72	82	6.6	14	40	36	-	40.8	42	-	-	8	3.5	6.5	66
GN 2292-86-82-I-C-EL	86	82	6.6	14	40	-	43	55	42	-	-	8	3.5	6.5	69
GN 2292-72-162-A-C-EL	72	162	6.6	14	80	36	-	40.8	-	50	32	8	3.5	6.5	116
GN 2292-86-162-I-C-EL	86	162	6.6	14	80	-	43	55	-	50	32	8	3.5	6.5	122

www.METALIKA-KACIN.com

Hinges

for aluminum profiles / panel elements

SPECIFICATION

Types

- Type **A**: exterior hinge wings
- Type **I**: interior hinge wings

Identification no.

- No. **C**: with countersunk holes

Aluminum **EL**
anodized, natural color

Bearing bushing / cover cap

- Plastic, Technopolymer (Polyamide PA)
- gray, RAL 7035

Tapered dowel pin ISO 8741
Steel zinc plated, blue passivated

INFORMATION

GN 2294 Hinges are made of drawn profiled aluminum and are used on doors and covers, for example. Given the external hinge wing, type A hinges allow mounting with a very small door gap. The type I is fastened in the door gap. The mounting screws are therefore inaccessible and hence protected from vandalism when the door is closed.
The hinges are delivered loose and must be mounted according to the accompanying instructions. Any hinge combination may be realized thanks to the modular design and available accessories.

TECHNICAL INFORMATION

- Plastic characteristics (see page A2)

ON REQUEST

- other lengths and hole spacings
- other finishes

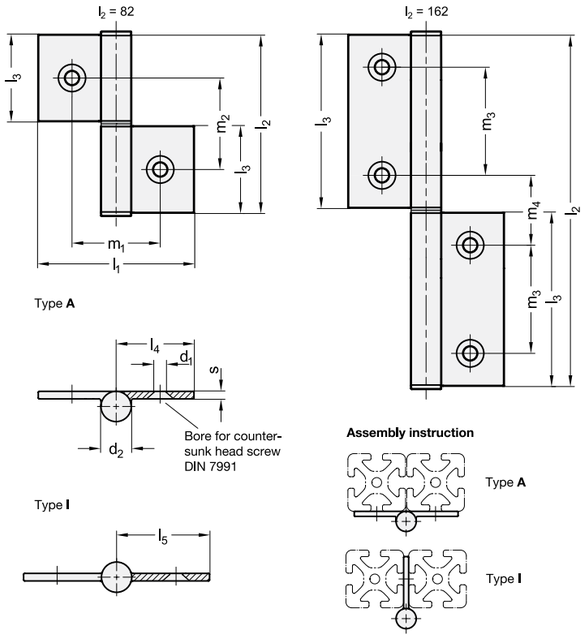

GN 2294

Description	l1	l2	d1	d2	l3	l4	l5	m1	m2	m3	m4	s	⚖
GN 2294-72-82-A-C-EL	72	82	6.6	14	40	36	-	40.8	42	-	-	3.5	62
GN 2294-86-82-I-C-EL	86	82	6.6	14	40	-	43	55	42	-	-	3.5	65
GN 2294-72-162-A-C-EL	72	162	6.6	14	80	36	-	40.8	-	50	32	3.5	107
GN 2294-86-162-I-C-EL	86	162	6.6	14	80	-	43	55	-	50	32	3.5	113

www.METALIKA-KACIN.com

Hinges

for aluminum profiles / panel elements, three-part

SPECIFICATION

Types

- Type **A**: exterior hinge wings
- Type **I**: interior hinge wings

Identification no.

- No. **C**: with countersunk holes

Aluminum **EL**
anodized, natural color

Bearing bushing / cover cap

- Plastic, Technopolymer (Polyamide PA)
- gray, RAL 7035

Tapered dowel pin ISO 8741
Steel zinc plated, blue passivated

INFORMATION

GN 2295 Hinges are made of drawn profiled aluminum and are used on doors and covers, for example.
Given the external hinge wing, type A hinges allow mounting with a very small door gap. The type I is fastened in the door gap. The mounting screws are therefore inaccessible and hence protected from vandalism when the door is closed.
The hinges are delivered loose and must be mounted according to the accompanying instructions. Any hinge combination may be realized (if needed, also by shortening the middle wing) thanks to the modular design and available accessories.

TECHNICAL INFORMATION

- Plastic characteristics (see page A2)

ON REQUEST

- other lengths and hole spacings
- other finishes

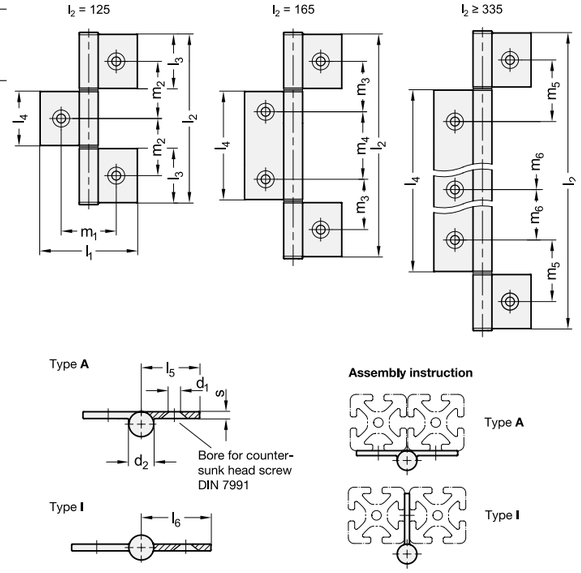

GN 2295

Description	l1	l2	l4	d1	d2	l3	l5	l6	m1	m2	m3	m4	m5	m6	s	⚖
GN 2295-72-125-A-C-EL	72	125	40	6.6	14	40	36	-	40.8	42.5	-	-	-	-	3.5	95
GN 2295-86-125-I-C-EL	86	125	40	6.6	14	40	-	43	55	42.5	-	-	-	-	3.5	99
GN 2295-72-165-A-C-EL	72	165	80	6.6	14	40	36	-	40.8	-	37.5	50	-	-	3.5	122
GN 2295-86-165-I-C-EL	86	165	80	6.6	14	40	-	43	55	-	37.5	50	-	-	3.5	128
GN 2295-72-335-A-C-EL	72	335	250	6.6	14	40	36	-	40.8	-	-	-	72.5	150	3.5	221
GN 2295-86-335-I-C-EL	86	335	250	6.6	14	40	-	43	55	-	-	-	72.5	150	3.5	234
GN 2295-72-485-A-C-EL	72	485	400	6.6	14	40	36	-	40.8	-	-	-	72.5	150	3.5	308
GN 2295-86-485-I-C-EL	86	485	400	6.6	14	40	-	43	55	-	-	-	72.5	150	3.5	327

www.METALIKA-KACIN.com

Hinges

for aluminum profiles / panel elements, three-part, vertically elongated outer wings

SPECIFICATION

Types

- Type **A**: exterior hinge wings
- Type **I**: interior hinge wings

Identification no.

- No. **C**: with countersunk holes

Aluminum **EL**
anodized, natural color

Bearing bushing / cover cap

- Plastic, Technopolymer (Polyamide PA)
- gray, RAL 7035

Tapered dowel pin ISO 8741
Steel zinc plated, blue passivated

INFORMATION

GN 2295 Hinges are made of drawn profiled aluminum and are used on doors and covers, for example.
Given the external hinge wing, type A hinges allow mounting with a very small door gap. The type I is fastened in the door gap. The mounting screws are therefore inaccessible and hence protected from vandalism when the door is closed.
The hinges are delivered loose and must be mounted according to the accompanying instructions. Any hinge combination may be realized (if needed, also by shortening the middle wing) thanks to the modular design and available accessories.

TECHNICAL INFORMATION

- Plastic characteristics (see page A2)

ON REQUEST

- other lengths and hole spacings
- other finishes

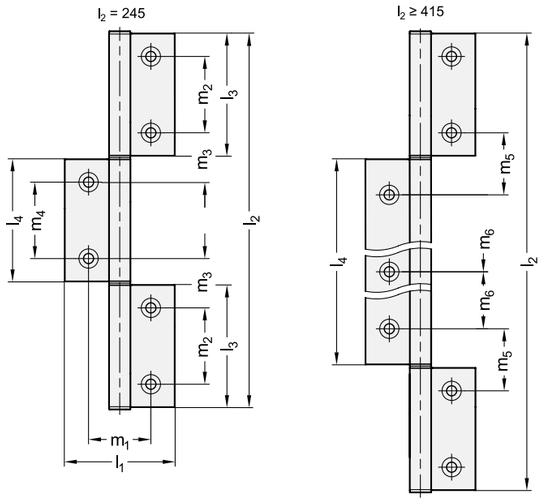

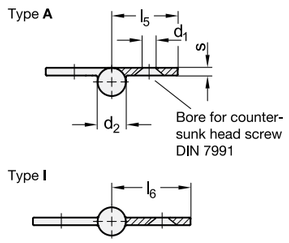

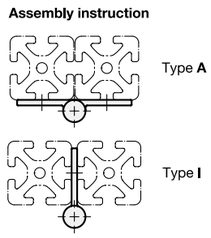

GN 2295-elongated

Description	l1	l2	l4	d1	d2	l3	l5	l6	m1	m2	m3	m4	m5	m6	s	⚖
GN 2295-72-245-A-C-EL	72	245	80	6.6	14	80	36	-	40.8	50	32.5	50	-	-	3.5	168
GN 2295-86-245-I-C-EL	86	245	80	6.6	14	80	-	43	55	50	32.5	50	-	-	3.5	177
GN 2295-72-415-A-C-EL	72	415	250	6.6	14	80	36	-	40.8	-	-	-	67.5	150	3.5	267
GN 2295-86-415-I-C-EL	86	415	250	6.6	14	80	-	43	55	-	-	-	67.5	150	3.5	282
GN 2295-72-565-A-C-EL	72	565	400	6.6	14	80	36	-	40.8	-	-	-	67.5	150	3.5	353
GN 2295-86-565-I-C-EL	86	565	400	6.6	14	80	-	43	55	-	-	-	67.5	150	3.5	375

Hinge wings

for aluminum profiles / panel elements

SPECIFICATION

Types

- Type **AF**: exterior hinge wing
- Type **AN**: exterior hinge wing, with guide step
- Type **IF**: interior hinge wing
- Type **IN**: interior hinge wing, with guide step

Identification no.

- No. **A**: without bores
- No. **C**: with countersunk holes

Aluminum **EL**
anodized, natural color

INFORMATION

GN 2291 Hinge wings can be combined with GN 2290 (see page) bolt sets into individualized hinge versions.
As of a hinge wing length of l2 ≥ 250 mm, individual lengths can be realized by shortening the hinge wing given the greater hole spacings.

ACCESSORY

Bolt sets GN 2290 (see page)

ON REQUEST

- other lengths and hole spacings
- other finishes

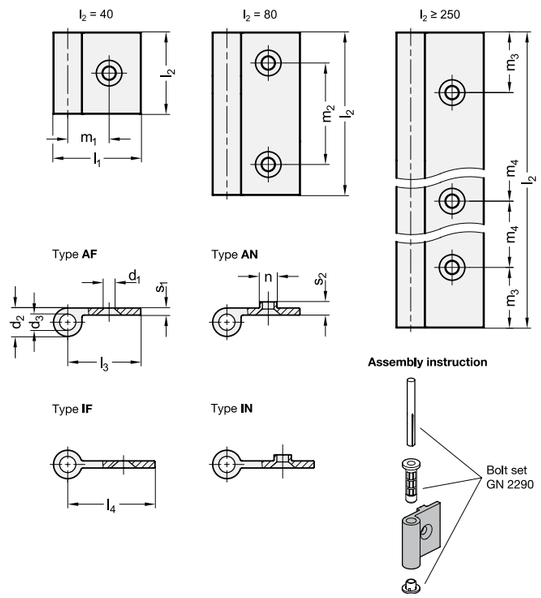

*Complete with Identification no. of the Hinge wings (A or C)

A without bores
C with countersunk holes

GN 2291

Description	l1	l2	d1	d2	d3	l3	l4	m1	m2	m3	m4	n -0.3	s1	s2	⚖
GN 2291-43-40-AN-*-EL	43	40	6.6	14	8	36	-	20.4	-	-	-	8	3.5	6.5	26
GN 2291-43-80-AN-*-EL	43	80	6.6	14	8	36	-	20.4	50	-	-	8	3.5	6.5	52
GN 2291-43-40-AF-*-EL	43	40	6.6	14	8	36	-	20.4	-	-	-	-	3.5	-	23
GN 2291-43-80-AF-*-EL	43	80	6.6	14	8	36	-	20.4	50	-	-	-	3.5	-	47
GN 2291-43-250-AF-*-EL	43	250	6.6	14	8	36	-	20.4	-	50	150	-	3.5	-	146
GN 2291-43-400-AF-*-EL	43	400	6.6	14	8	36	-	20.4	-	50	150	-	3.5	-	233
GN 2291-50-40-IF-*-EL	50	40	6.6	14	8	-	43	27.5	-	-	-	-	3.5	-	25
GN 2291-50-80-IF-*-EL	50	80	6.6	14	8	-	43	27.5	50	-	-	-	3.5	-	50
GN 2291-50-250-IF-*-EL	50	250	6.6	14	8	-	43	27.5	-	50	150	-	3.5	-	155
GN 2291-50-400-IF-*-EL	50	400	6.6	14	8	-	43	27.5	-	50	150	-	3.5	-	249
GN 2291-50-40-IN-*-EL	50	40	6.6	14	8	-	43	27.5	-	-	-	8	3.5	6.5	27
GN 2291-50-80-IN-*-EL	50	80	6.6	14	8	-	43	27.5	50	-	-	8	3.5	6.5	55

Weight Identification no. A

www.METALIKA-KACIN.com

Bolt sets

for hinge wings GN 2291

RoHS

SPECIFICATION

Identification no.

- No. **1**: for two-part hinges
- No. **2**: for three-part hinges, with short middle wing
- No. **3**: for three-part hinges, with elongated middle wing

Bearing bushing / cover cap
Plastic, Technopolymer (Polyamide PA)
gray, RAL 7035 **GR**

Tapered dowel pin ISO 8741
Steel zinc plated, blue passivated

INFORMATION

GN 2290 Bolt sets are designed as accessories for GN 2291 (see page) hinge wings for mounting individual hinge versions. Bolt sets with identification no. 1 are designed for hinges with two hinge wings, bolt sets with identification no. 2 and 3 are designed for hinges with three hinge wings. Bolt sets with identification no. 2 are used exclusively for short middle wings with a length of 40 mm. Bolt sets with identification no. 3 must be used for longer middle wings.

TECHNICAL INFORMATION

- Plastic characteristics (see page A2)

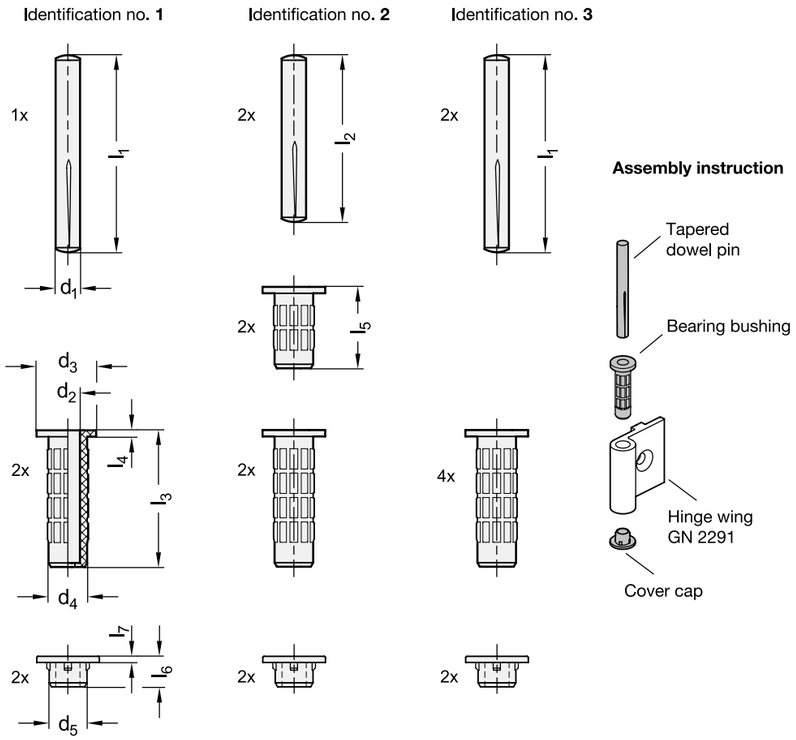

GN 2290

Description	d1	d2	d3 ±0.2	d4	d5	l1	l2	l3	l4	l5	l6	l7	⚖
GN 2290-1-GR	6	6.15	13.9	8	7.8	60	-	33	1	-	7.5	1.5	16
GN 2290-2-GR	6	6.15	13.9	8	7.8	-	50	33	1	20	7.5	1.5	27
GN 2290-3-GR	6	6.15	13.9	8	7.8	60	-	33	1	-	7.5	1.5	32

www.METALIKA-KACIN.com

Aluminium range - Hinges
Various hinges

MOUNTING INFORMATION

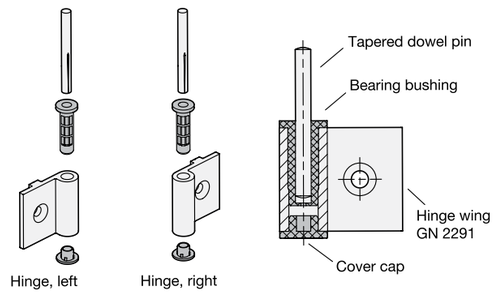

LEFT / RIGHT HINGES

Right or left hinges can be created by the direction in which the bearing bushings are inserted into the hinge wing.

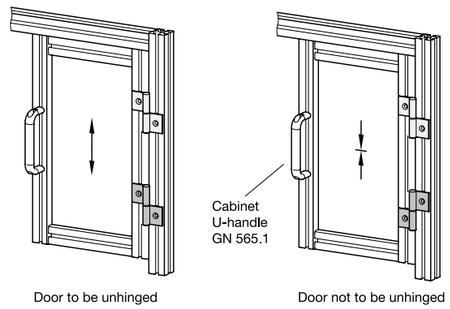

MOUNTING ON DOOR FRAMES

For mounting a door that should be removable, two hinges of the same type must be attached to the door frame.
If the door is not supposed to be removable, the door must be mounted with at least one right hinge and at least one left hinge.

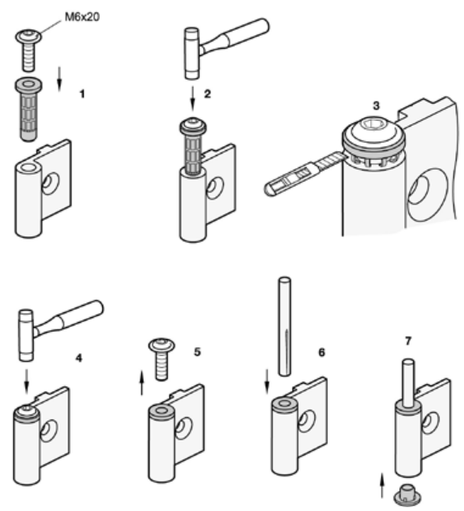

MOUNTING

1. Position the bearing bushing with the desired installation direction on the hinge wing. Then insert a screw with a collar such as an ISO 7380 oval head screw into the bearing bushing to protect the bearing bushing collar from damage while pounding in.
2. Pound in the bearing bushing until about 1 mm remains between the bearing bushing collar and the hinge wing.
3. Remove the burr on the bearing bushing using a knife.
4. Pound in the bearing bushing all the way.
5. Remove the screw.
6. Pound a tapered dowel pin into the bearing bushing.
7. Place the cover cap on the opposite side of the hinge wing.

Insert the other bearing bushings according to points 1 to 5.

www.METALIKA-KACIN.com

SE6 Hinge

Position control · Constant torque

- **Holds in every position**
- **No adjustment required**
- **Long cycle life**

Material and Finish

Medium: Aluminum alloy, black paint

Performance Details

Cycle performance: 20,000 cycles within ± 20% of static torque specification

Medium:
Maximum static load: 155 N (35 lbf)
Average ultimate load:
3000 N (675 lbf)

Medium:
Maximum static load: 155 N (35 lbf)
Average ultimate load:
1600 N (360 lbf)

Part Number

See table

Medium

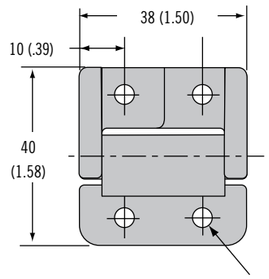

ACTUAL SIZE

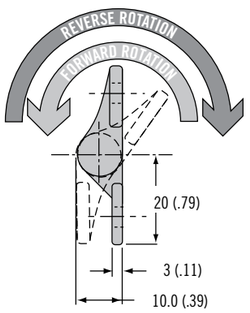

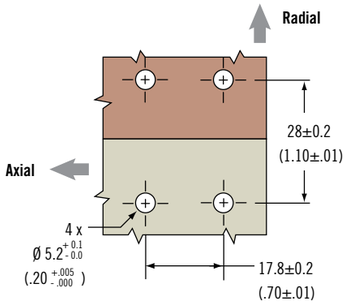

Symmetric

Part Number	Symmetric Torque N·m (in·lbf)
SE6_10_200_50	Free operating
SE6_10_208_50	0.9 (8)
SE6_10_212_50	1.4 (12)
SE6_10_216_50	1.8 (16)
SE6_10_220_50	2.3 (20)

Asymmetric

Part Number	Forward Torque N·m (in·lbf)	Reverse torque N·m (in·lbf)
SE6_10_212F_50	1.4 (12)	0.8 (7.2)
SE6_10_216F_50	1.8 (16)	1.1 (9.6)
SE6_10_220F_50	2.3 (20)	1.4 (12)
SE6_10_224F_50	2.7 (24)	1.6 (14.4)
SE6_10_212R_50	0.8 (7.2)	1.4 (12)
SE6_10_216R_50	1.1 (9.6)	1.8 (16)
SE6_10_220R_50	1.4 (12)	2.3 (20)
SE6_10_224R_50	1.6 (14.4)	2.7 (24)

Dimensions in millimeters (inch) unless otherwise stated

www.METALIKA-KACIN.com

SE6 Hinge

Position Control · Constant Torque

- **Holds in every position**
- **No adjustment required**
- **Long cycle life**

Material and Finish

Aluminum alloy, black powder coat

Performance Details

Cycle performance
20,000 Cycles, see product drawing for details

Radial load:
Max. static load: 200 N (45 lbf)
Average ultimate load:
2200 N (500 lbf)

Axial load:
Max. static load: 200 N (45 lbf)
Average ultimate load:
1450 N (325 lbf)

Part Number

See table

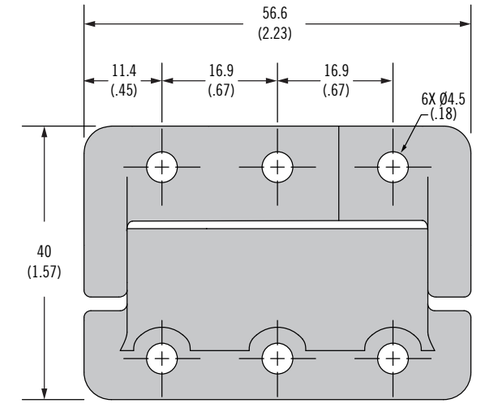

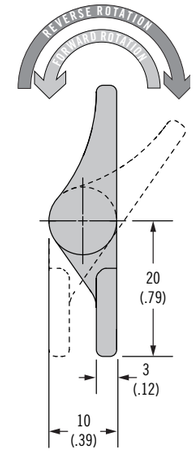

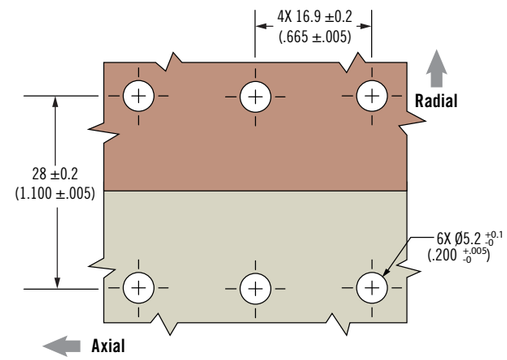

ACTUAL SIZE

Symmetric

Part Number	Symmetric Torque N·m (in·lbf)
SE6_10E_200_50	Free operating
SE6_10E_208_50	0.9 (8)
SE6_10E_212_50	1.4 (12)
SE6_10E_216_50	1.8 (16)
SE6_10E_220_50	2.3 (20)
SE6_10E_224_50	2.7(24)
SE6_10E_230_50	3.4 (30)

Asymmetric

Part Number	Forward Torque N·m (in·lbf)	Reverse Torque N·m (in·lbf)
SE6_10E_212F_50	1.4 (12)	0.8 (7.2)
SE6_10E_216F_50	1.8 (16)	1.1 (9.6)
SE6_10E_220F_50	2.3 (20)	1.4 (12)
SE6_10E_224F_50	2.7 (24)	1.6 (14)
SE6_10E_230F_50	3.4 (30)	2.0 (18)
SE6_10E_240F_50	4.5 (40)	2.7 (24)
SE6_10E_212R_50	0.8 (7.2)	1.4 (12)
SE6_10E_216R_50	1.1 (9.6)	1.8 (16)
SE6_10E_220R_50	1.4 (12)	2.3 (20)
SE6_10E_224R_50	1.6 (14)	2.7 (24)
SE6_10E_230R_50	2.0 (18)	3.4 (30)
SE6_10E_240R_50	2.7 (24)	4.5 (40)

Dimensions in millimeters (inch) unless otherwise stated

www.METALIKA-KACIN.com

SE6 Hinge

Position control · Constant torque

- **Holds in every position**
- **No adjustment required**
- **Long cycle life**

Material and Finish

Aluminum alloy, black powder coated

Performance Details

Cycle performance: 20,000 cycles within ± 20% of static torque specification

Radial load:
Max. static load: 2,000 N (450 lbf)
Average ultimate load:
10,500 N (2,360 lbf)

Axial load:
Max. static load: 500 N (110 lbf)
Average ultimate load:
9,000 N (2,023 lbf)

Part Number

See table

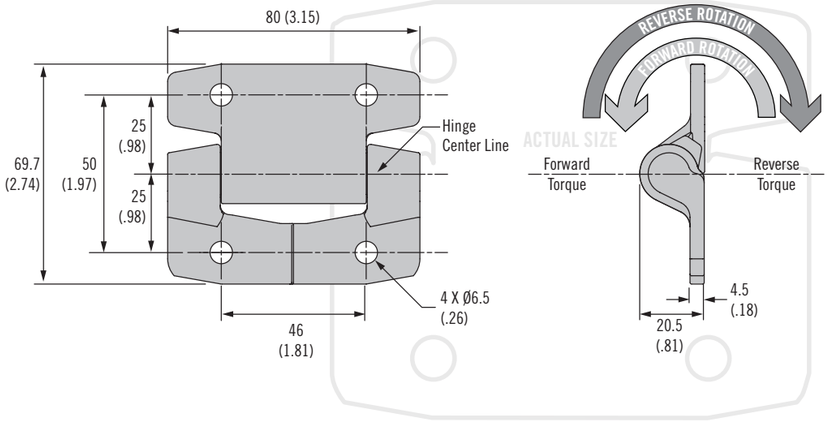

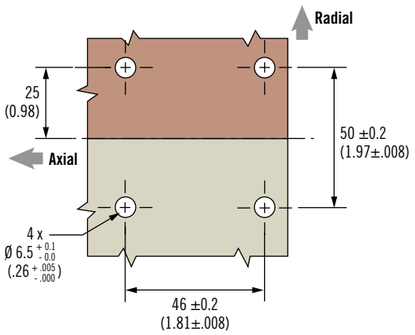

Asymmetric

Part Number	Forward Torque N•m (in•lbf)	Reverse Torque N•m (in•lbf)
SE6_10_620F_50	2.3 (20.0)	1.7 (14.9)
SE6_10_635F_50	3.9 (35.0)	3.0 (26.7)
SE6_10_650F_50	5.7 (50.0)	4.0 (35.7)
SE6_10_665F_50	7.3 (65.0)	5.4 (47.5)
SE6_10_680F_50	9.0 (80.0)	6.7 (59.4)
SE6_10_695F_50	10.7 (95.0)	7.8 (68.9)
SE6_10_6110F_50	12.4 (110.0)	9.0 (79.8)
SE6_10_620R_50	1.7 (14.9)	2.3 (20.0)
SE6_10_635R_50	3.0 (26.7)	3.9 (35.0)
SE6_10_650R_50	4.0 (35.7)	5.7 (50.0)
SE6_10_665R_50	5.4 (47.5)	7.3 (65.0)
SE6_10_680R_50	6.7 (59.4)	9.0 (80.0)
SE6_10_695R_50	7.8 (68.9)	10.7 (95.0)
SE6_10_6110R_50	9.0 (79.8)	12.4 (110.0)

Symmetric

Part Number	Symmetric Torque N•m (in•lbf)
SE6_10_620S_50	2.3 (20.0)
SE6_10_635S_50	3.9 (35.0)
SE6_10_650S_50	5.7 (50.0)
SE6_10_665S_50	7.3 (65.0)
SE6_10_680S_50	9.0 (80.0)

Dimensions in millimeters (inch) unless otherwise stated

www.METALIKA-KACIN.com

SE6 Hinge

Position Control · Constant Torque · One Way

- **Holds in every position**
- **No adjustment required**
- **Long cycle life**
- **Minimal resistance in free direction**

Material and Finish

Aluminum alloy, black powder coated

Performance Details

Cycle performance: 20,000 Cycles, see trade drawing for details
Radial load:
Max. static load: 2000 N (450 lbf)
Average ultimate load:
3500 N (780 lbf)

Axial load:
Max. static load: 500 N (110 lbf)
Average ultimate load:
6000 N (1300 lbf)

Installation Notes

Do not remove shipping clip until hinge is secured by first pair of screws. Discard or recycle shipping clip when removed.

Part Number

See table

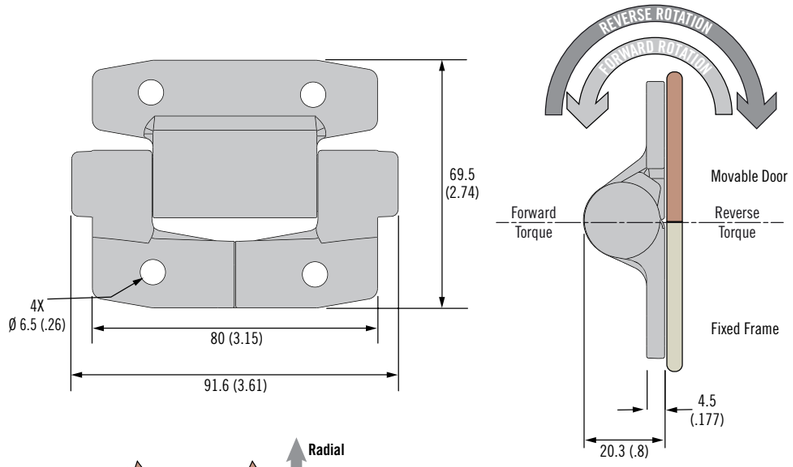

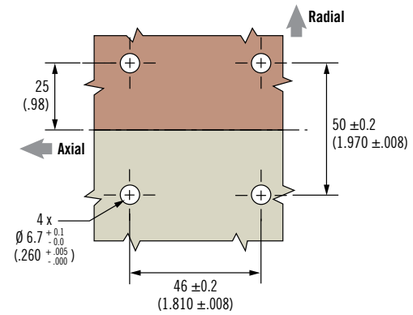

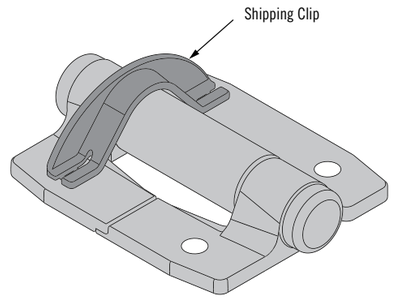

Part Number	Forward Torque N•m (in•lbf)	Reverse Torque N•m (in•lbf)
SE6_10_620F0_50	2.3 (20)	Free
SE6_10_635F0_50	3.9 (35)	Free
SE6_10_650F0_50	5.7 (50)	Free
SE6_10_665F0_50	7.3 (65)	Free
SE6_10_680F0_50	9.0 (80)	Free
SE6_10_695F0_50	10.7 (95)	Free
SE6_10_6110F0_50	12.4 (110)	Free
SE6_10_620R0_50	Free	2.3 (20)
SE6_10_635R0_50	Free	3.9 (35)
SE6_10_650R0_50	Free	5.7 (50)
SE6_10_665R0_50	Free	7.3 (65)
SE6_10_680R0_50	Free	9.0 (80)
SE6_10_695R0_50	Free	10.7 (95)
SE6_10_6110R0_50	Free	12.4 (110)

Dimensions in millimeters (inch) unless otherwise stated

www.METALIKA-KACIN.com

SE6 Hinge

Position control · Constant torque · Plastic

- **Holds in every position**
- **No adjustment required**
- **Long cycle life**
- **Corrosion resistant**
- **Multiple mounting options**
- **Concealed mounting hardware**

Material and Finish

50 Series: Nylon, steel, anodized aluminum

Performance Details

Cycle performance
20,000 cycles, see trade drawing for details

Radial load:
Max. static load: 200 N (45 lbf)
Average ultimate load:
1500 N (335 lbf)

Axial load:
Max. static load: 200 N (45 lbf)
Average ultimate load:
2500 N (560 lbf)

Part Number

See table

XX	Color
20	Black
10	White

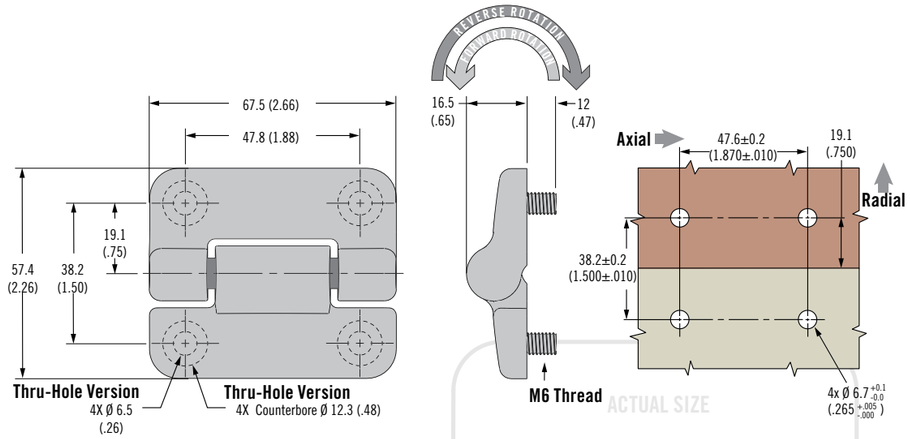

50 Series: Constant torque mechanism providing customizable, precise operating efforts

Symmetric Torque Versions		
Part Number		Static Torque (forward and reverse) N•m (in•lbf)
Thru-Hole Mounting	Thread Stud Mounting	
SE_50_535S_XX	SE6_55_535S_XX	3.95 (35)
SE_50_530S_XX	SE6_55_530S_XX	3.39 (30)
SE_50_525S_XX	SE6_55_525S_XX	2.82 (25)
SE_50_520S_XX	SE6_55_520S_XX	2.26 (20)
SE_50_515S_XX	SE6_55_515S_XX	1.69 (15)

Asymmetric Torque Versions			
Part Number		Forward Torque N•m (in•lbf)	Reverse Torque N•m (in•lbf)
Thru-Hole Mounting	Thread Stud Mounting		
SE_50_540F_XX	SE6_55_540F_XX	4.52 (40)	3.16 (28)
SE_50_535F_XX	SE6_55_535F_XX	3.95 (35)	2.77 (24.5)
SE_50_530F_XX	SE6_55_530F_XX	3.39 (30)	2.37 (21)
SE_50_525F_XX	SE6_55_525F_XX	2.82 (25)	1.98 (17.5)
SE_50_520F_XX	SE6_55_520F_XX	2.26 (20)	1.58 (14)
SE_50_515F_XX	SE6_55_515F_XX	1.69 (15)	1.19 (10.5)
SE_50_540R_XX	SE6_55_540R_XX	3.16 (28)	4.52 (40)
SE_50_535R_XX	SE6_55_535R_XX	2.77 (24.5)	3.95 (35)
SE_50_530R_XX	SE6_55_530R_XX	2.37 (21)	3.39 (30)
SE_50_525R_XX	SE6_55_525R_XX	1.98 (17.5)	2.82 (25)
SE_50_520R_XX	SE6_55_520R_XX	1.58 (14)	2.26 (20)
SE_50_515R_XX	SE6_55_515R_XX	1.19 (10.5)	1.69 (15)

Dimensions in millimeters (inch) unless otherwise stated

www.METALIKA-KACIN.com

SST-8P Hinge

Position control · Constant torque

- **Designed for overmolding**
- **Brings constant torque performance to a wide range of applications**
- **Space efficient design provides high torque in minimum space**
- **Never requires adjustment**

Material and Finish

Aluminum, plastic and hardened steel

Performance Details

Cycle performance:
20,000 cycles within ± 20% of static torque specification

Part Number

See table

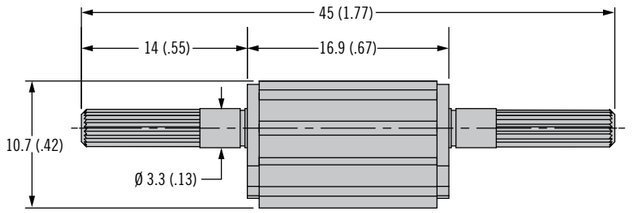

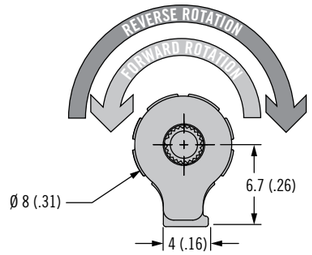

ACTUAL SIZE

Symmetric Torque Versions	
Part Number	Static Torque (Forward and Reverse) N•m (in•lbf)
SST_8P_40SA_50	0.45 (4)
SST_8P_60SA_50	0.68 (6)
SST_8P_80SA_50	0.9 (8)

Asymmetric Torque Versions		
Part Number	Static Torque N•m (in•lbf)	
	Forward N•m (in•lbf)	Reverse N•m (in•lbf)
SST_8P_40FA_50	0.45 (4.0)	0.27 (2.4)
SST_8P_60FA_50	0.68 (6.0)	0.41 (3.6)
SST_8P_80FA_50	0.90 (8.0)	0.54 (4.8)
SST_8P_100FA_50	1.13 (10.0)	0.68 (6)
SST_8P_40RA_50	0.27 (2.4)	0.45 (4)
SST_8P_60RA_50	0.41 (3.6)	0.68 (6)
SST_8P_80RA_50	0.54 (4.8)	0.9 (8)
SST_8P_100RA_50	0.68 (6.0)	1.13 (10)

Dimensions in millimeters (inch) unless otherwise stated

www.METALIKA-KACIN.com

Typ 216 Wagentürscharniere aus Aluminiumprofil mit vernietetem Nirosta-Stift

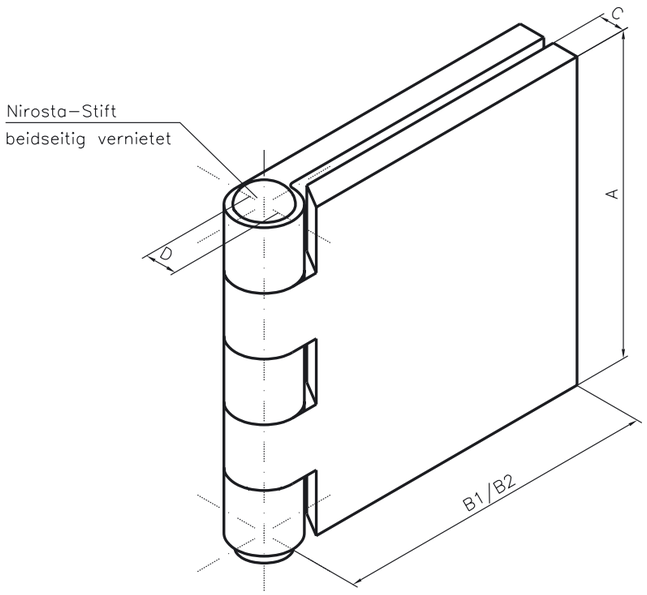

216 .. .. mit vernietetem Nirosta-Stift

Artikel-Nr.:	A	B1	B2	C	D	Gewerbe-teilung
	mm	mm	mm	mm	mm	
... 40 31	40	40	40	3	4	5
... 40 32	40	60	60	3	4	5
... 50 31	50	40	40	3	4	5
... 50 32	50	60	60	3	4	5
... 60 31	60	40	40	3	4	5
... 60 32	60	60	60	3	4	5
... 80 31	80	40	40	3	4	5
... 80 32	80	60	60	3	4	5

www.METALIKA-KACIN.com

Profilscharniere aus Aluminium

Mat.:
Scharnierlappen: AlMgSio,5
Scharnierstift : VA (1.4301)

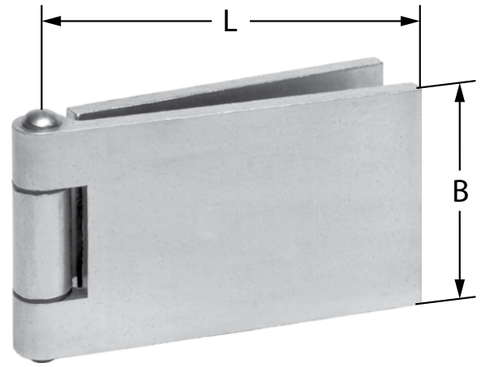

Art.-Nr.	B x L	Stärke	Stift-Ø
02000/81	60 x 80 mm	6 mm	8 mm
02000/82	80 x 100 mm	6 mm	8 mm
02000/83	60 x 120 mm	6 mm	8 mm
02000/87	80 x 100 mm	6 mm	8 mm

Scharnier

Mat.: Aluminium, RAL 9006 beschichtet

Art.-Nr.: 11084
mit profilierter Auflagefläche

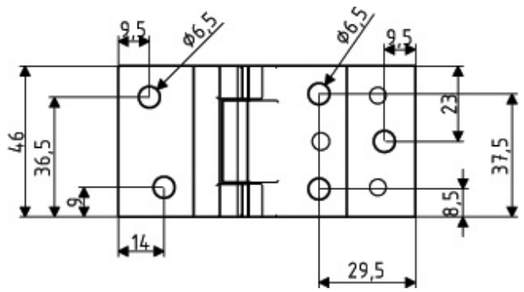

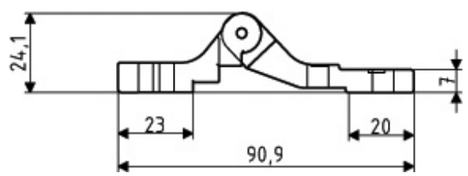

www.METALIKA-KACIN.com

Aluminiumscharnier

Mat.: LM (AlMgSi 0,8 F 25 WA)
Fertigungslänge: 2.440 mm

Art.-Nr.: 11192

Für den waagerechten Anschlag von Klappen, deren Gewicht nicht mehr als 25 Kg/m beträgt.

Max. Öffnungswinkel: 100°

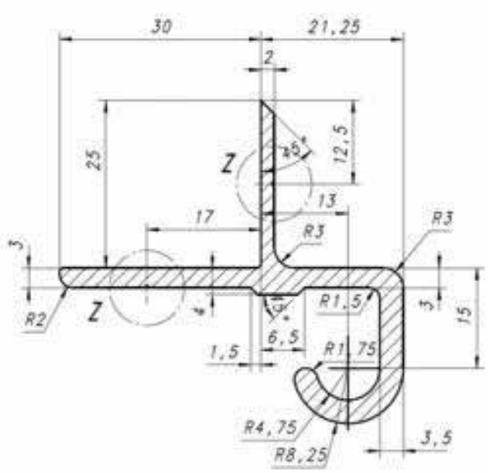

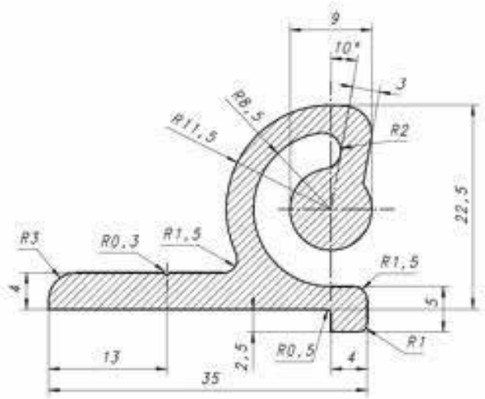

www.METALIKA-KACIN.com

Hinges with soft-closing aluminium

452156

452-152 hinges 63x80x5mm with soft-closing
zinc alloy silver, nice look
with built-in white plastic shaft
dampening direction: counter clockwise (80° to 180°)
with torque 10-17 Kg/cm (friction not adjustable)
the hinge can be used for 0°C. till +40°C.
surface mounting, maximum hook 100°
with extra power hold in begin position 80°
from 80°-110° only working with enough gravity
with extra power from 170° to 180°
knuckle ø21,5mm, total highness 21,5mm
with each 3+3 lower screwholes ø5,4mm

452-156 hinges 63x80x5mm with soft-closing
zinc alloy silver, nice look
with built-in grey plastic shaft
dampening direction: clockwise (from 180° to 80°)
with torque 10-17 Kg/cm (friction not adjustable)
the hinge can be used for 0°C. till +40°C.
surface mounting, maximum hook 100°
with extra power hold in begin position 180°
from 180°-160° only working with enough gravity
with extra power from 90° to 80°
knuckle ø21,5mm, total highness 21,5mm
with each 3+3 lower screwholes ø5,4mm

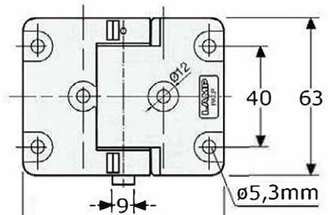

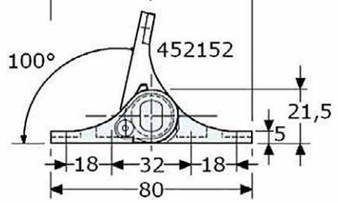

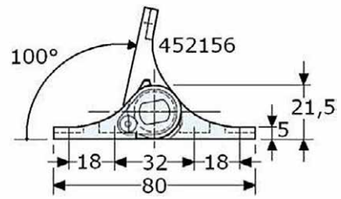

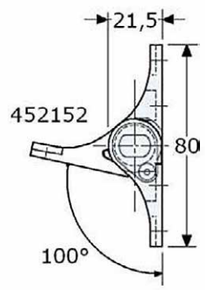

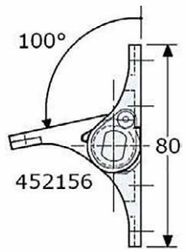

www.METALIKA-KACIN.com

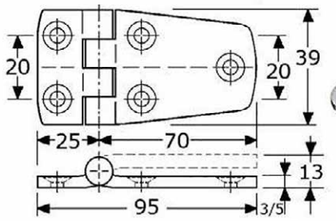

452-595

solid screw-on hinges 39x95mm
aluminium anodised (AlMg Si 0,5)
highness 39mm, widthness 25+70=95mm
flat, thickness 3-5mm, fixed nylon pin ø6mm
5-knuckles ø10mm, rounded
with 3+2 countersunked screwholes
in box of 7 Pcs. (selling-off)

ALU sklepna spona SP-00904

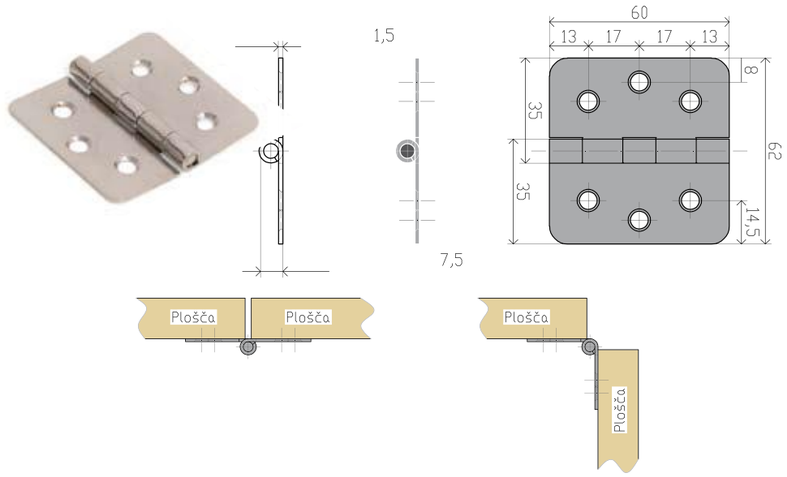

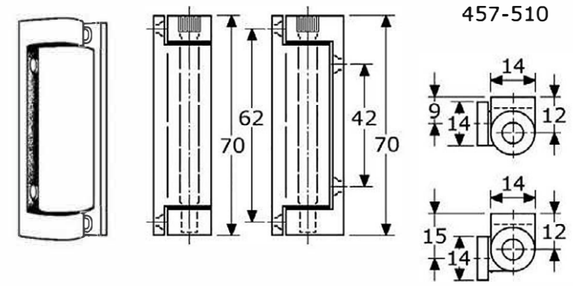

457-510

screw-on profile hinges
aluminium anodised
highness 70mm, outside profile ø14mm
with loose stainless steel milled edge pin ø7mm
with grey nylon bushes, for left and right use
with 2 countersunked holes 4mm/M4 c.t.c. 62mm
with 2 countersunked holes 5mm/M5 c.t.c. 42mm
for minimum 16mm offset doors
maximum door weight 40 Kg (3 hinges)
in boxes of 20 Pcs.

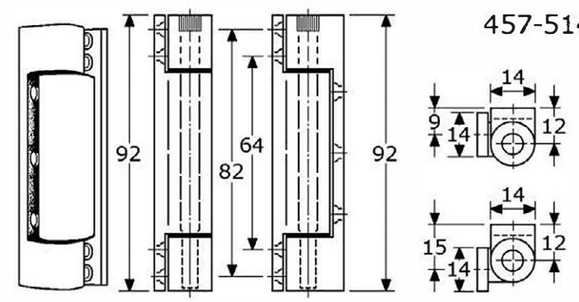

457-514

screw-on profile hinges
aluminium anodised
highness 92mm, outside profile ø14mm
with loose stainless steel milled edge pin ø7mm
with grey nylon bushes, for left and right use
with 4 countersunked holes 4mm/M4
with 3 countersunked holes 5mm/M5
for minimum 16mm offset doors
maximum door weight 60 Kg (3 hinges)
in boxes of 20 Pcs. (delivery on request)

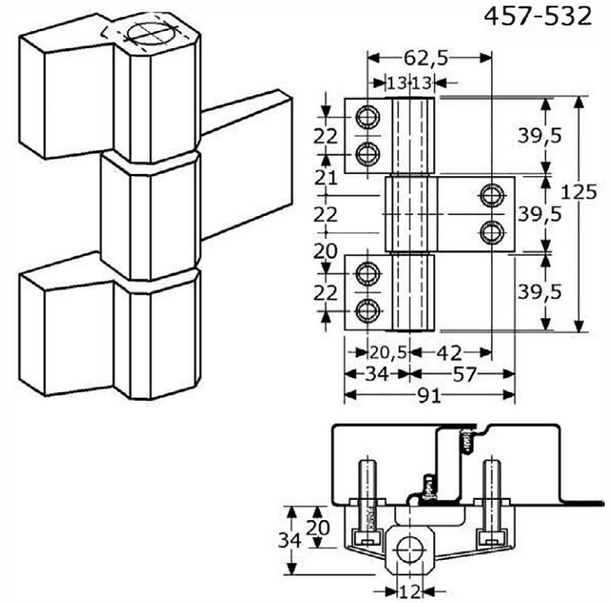

457-532

heavy duty hinges, 3-parts
aluminium anodised
highness 125mm, outside profile ø26mm
for flat mounting, widthness 34+57=91mm
with 3 aluminium covers, for left and right use
with locked up pin stainless steel ø12mm
with black nylon bushes, with black tips
3-dimensionally adjustable
unvisable mounting with 6x bolts M8 c.t.c. 62,5mm
with 15mm aluminium back-mounting plate
maximum door weight 120 Kg (2 hinges)
in boxes of 10 Pcs.

also possible:
- in stainless steel h=158mm, see page GY-394b
- in aluminium with 2-parts (457522) high 84mm
- with each 2x ball bearing stainless steel ø22,5mm (outside & inside SS-304/A2, balls SS-420 harded) hinges will be 2x ±7mm higher

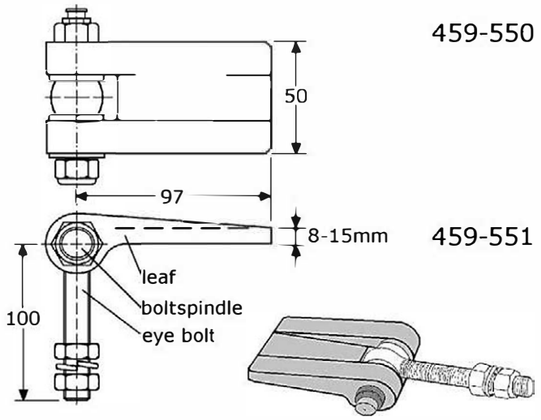

459-550 heavy duty weld-on hinges M12
aluminium, unpolished
"M"-leaf 50x97mm, leaf thickness 8-15mm
diameter ø30mm
with bolt spindle stainless steel ø12mm
with brass grease nipple
with eye bolt stainless steel M12x100
in boxes of 10 Pcs.

459-551 heavy duty weld-on hinges M12
aluminium, unpolished
"M"-leaf 50x97mm, leaf thickness 8-15mm
diameter ø30mm
with bolt spindle stainless steel ø12mm
with grease nipple stainless steel
with eye bolt stainless steel M12x100
in boxes of 10 Pcs.

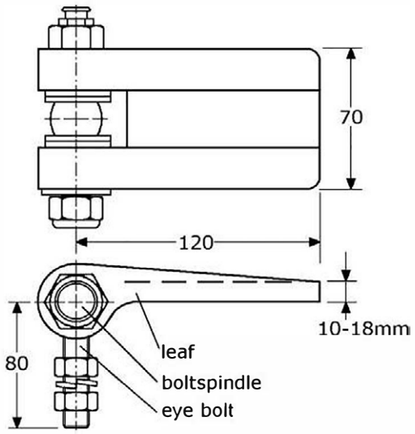

459-552 heavy duty weld-on hinges M16
aluminium, unpolished
"M"-leaf 70x120mm, leaf thickness 10-18mm
diameter ø38mm
with bolt spindle stainless steel ø18mm
with brass grease nipple
with eye bolt stainless steel M16x80
in boxes of 10 Pcs.

459-553 heavy duty weld-on hinges M16
aluminium, unpolished
"M"-leaf 70x120mm, leaf thickness 10-18mm
diameter ø38mm
with bolt spindle stainless steel ø18mm
with grease nipple stainless steel
with eye bolt stainless steel M16x80
in boxes of 10 Pcs.

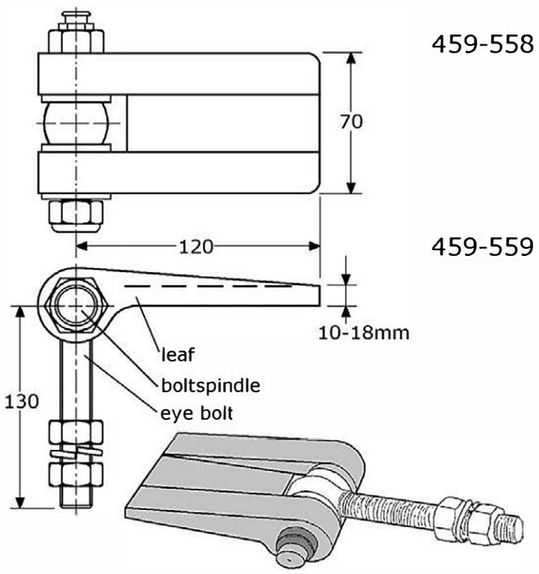

459-558 heavy duty weld-on hinges M20
aluminium, unpolished
"M"-leaf 70x120mm, leaf thickness 10-18mm
diameter ø38mm
with bolt spindle stainless steel ø18mm
with brass grease nipple
with eye bolt stainless steel M20x130
in boxes of 10 Pcs.

459-559 heavy duty weld-on hinges M20
aluminium, unpolished
"M"-leaf 70x120mm, leaf thickness 10-18mm
diameter ø38mm
with bolt spindle stainless steel ø18mm
with grease nipple stainless steel
with eye bolt stainless steel M20x130
in boxes of 10 Pcs.

www.METALIKA-KACIN.com

Hinges aluminium

Description

Material:
Die-cast aluminium.
Hinge pin stainless steel.

Version:
Hinge silver powder coated.
Axle bright.

Note:
Hinges for panel elements and aluminium profiles, non lift-off.
The hinges can be fitted with a plastic spacer on the hinge pin.

On request:
Hinges with guide tabs for aluminium profiles (slots 5, 6, 8, 10, 12 and 14).
Unequal leaf combinations.

Drawings

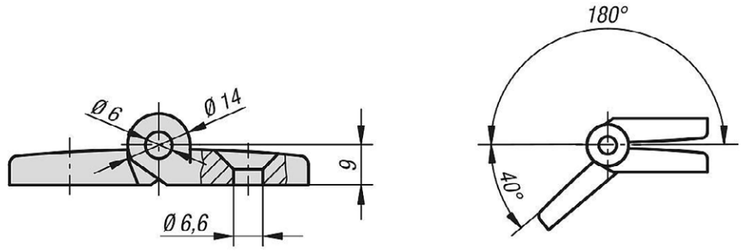

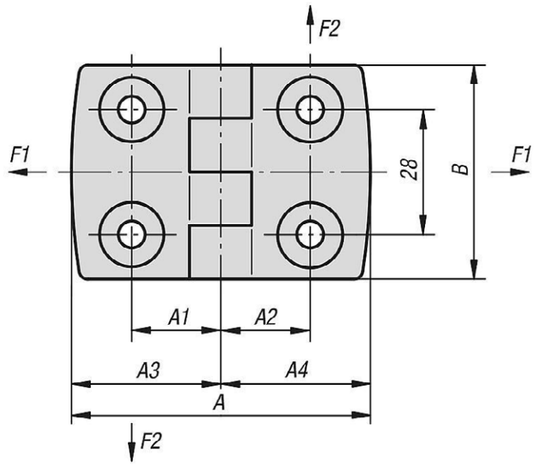

Order No.	A	A1	A2	A3	A4	B	F1 max. kN	F2 max. kN
0580.251515	52	15	15	26	26	48	0,275	0,215
0580.301818	59	17,5	17,5	29,5	29,5	48	0,325	0,225
0580.352020	72	20	20	36	36	48	0,325	0,225
0580.402323	77	22,5	22,5	38,5	38,5	48	0,4	0,25
0580.452525	87	25	25	43,5	43,5	48	0,4	0,25
0580.502828	97	27,5	27,5	48,5	48,5	48	0,4	0,25
0580.603333	115	32,5	32,5	57,5	57,5	48	0,4	0,1

www.METALIKA-KACIN.com

Hinges aluminium, lift-off, left

Description

Material:
Die-cast aluminium.
Hinge pin stainless steel.

Version:
Hinge silver powder coated.
Axle bright.

Note:
Hinges for panel elements and aluminium profiles.
The hinges can be fitted with a plastic spacer ring on the hinge pin.

On request:
Hinges with guide tabs for aluminium profiles (slots 5, 6, 8, 10, 12 and 14).
Unequal leaf combinations.

Drawings

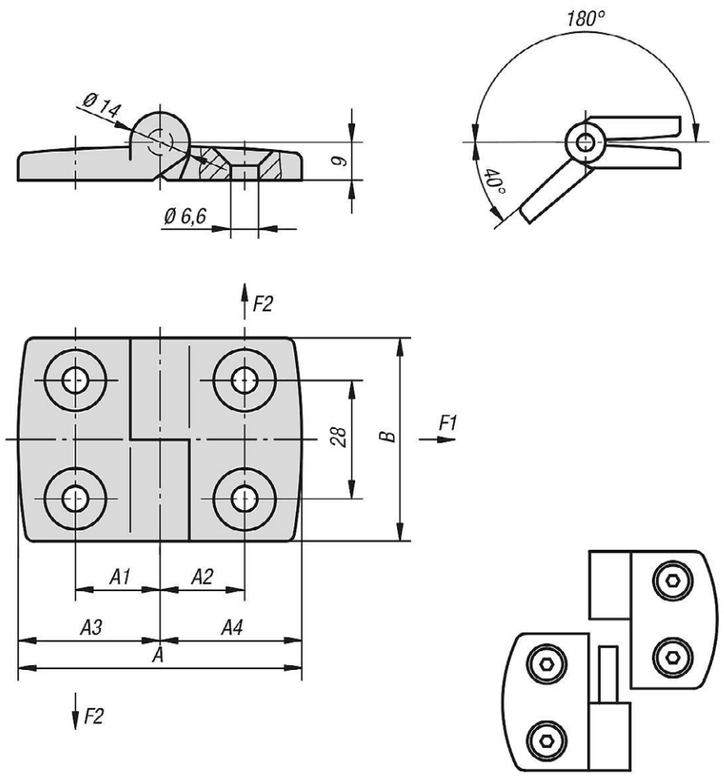

Order No.	A	A1	A2	A3	A4	B	F1 max. kN	F2 max. kN
0579.1251515	52	15	15	26	26	48	0,41	0,25
0579.1301818	59	17,5	17,5	29,5	29,5	48	0,45	0,28
0579.1352020	72	20	20	36	36	48	0,5	0,25
0579.1402323	77	22,5	22,5	38,5	38,5	48	0,55	0,2
0579.1452525	87	25	25	43,5	43,5	48	0,55	0,2
0579.1502828	97	27,5	27,5	48,5	48,5	48	0,55	0,175
0579.1603333	115	32,5	32,5	57,5	57,5	48	0,575	0,15

www.METALIKA-KACIN.com

Hinges aluminium, lift-off, right

Description

Material:
Die-cast aluminium.
Hinge pin stainless steel.

Version:
Hinge silver powder coated.
Axle bright.

Note:
Hinges for panel elements and aluminium profiles.
The hinges can be fitted with a plastic spacer ring on the hinge pin.

On request:
Hinges with guide tabs for aluminium profiles (slots 5, 6, 8, 10, 12 and 14).
Unequal leaf combinations.

Drawings

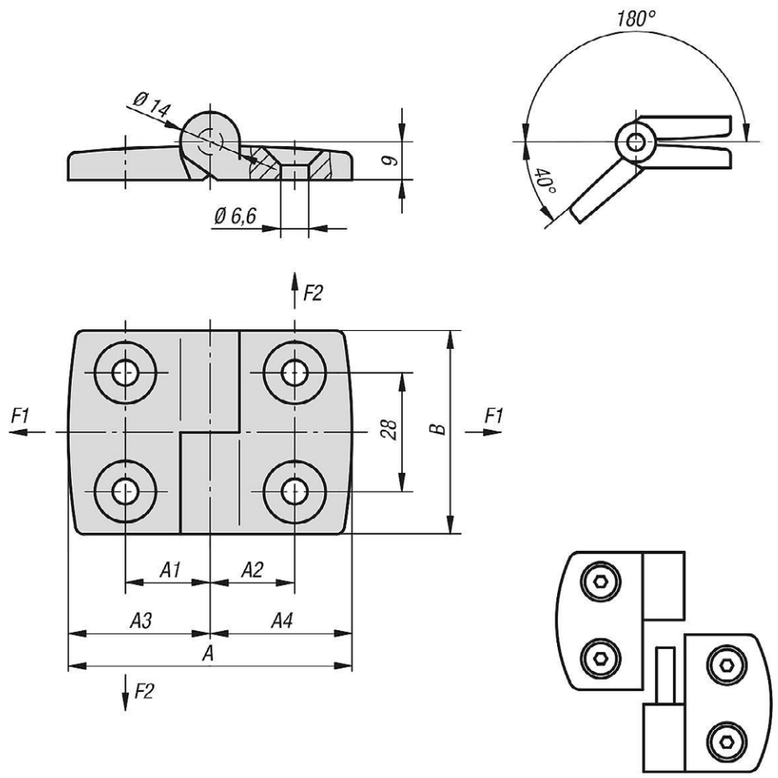

Order No.	A	A1	A2	A3	A4	B	F1 max. kN	F2 max. kN
0579.2251515	52	15	15	26	26	48	0,41	0,25
0579.2301818	59	17,5	17,5	29,5	29,5	48	0,45	0,28
0579.2352020	72	20	20	36	36	48	0,5	0,25
0579.2402323	77	22,5	22,5	38,5	38,5	48	0,55	0,2
0579.2452525	87	25	25	43,5	43,5	48	0,55	0,2
0579.2502828	97	27,5	27,5	48,5	48,5	48	0,55	0,175
0579.2603333	115	32,5	32,5	57,5	57,5	48	0,575	0,15

www.METALIKA-KACIN.com

TILA continuous hinge

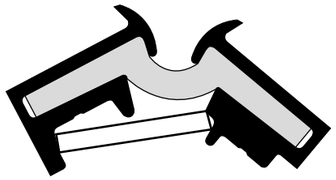

Advantages:

- Suitable for doors, tailgates, covers and flaps
- Only minimal external protrusion. A contribution towards road safety since the risk of injury caused by dangerous, protruding fittings, is eliminated
- Hinge and seal all-in-one - along the entire length
- Absolute precision - when in the closed position the two aluminium profiles interlock together. They can only be dismantled when the door, tailgate, cover are open. Forced entry can only be made by cutting the plastic profile, leaving behind visible evidence
- Virtually no wear
- Totally maintenance-free - has been in practical use for more than two decades, primarily in the bodywork and vehicle area, tried and tested
- Supplied ready-assembled in standard and special lengths (by request)

The Function

The „hinge“ takes a specially moulded plastic profile made from a special POLYURETHANE elastomer with permanent elasticity and high tear resistance.
Opening angles of more than 180° or 270° are achieved depending upon the profile design. Continuous stress when in the open position requires the use of a holding mechanism to keep the hinge open, e.g. in the case of doors - a Door retainer.

Potential Uses

Can be fitted to doors, tailgates, lids of all kind, as single element or as an add-on unit (for so-called folding or concertina designs), in bodywork and vehicle construction, for boot and van fixings, sales vehicles and buses etc. For use wherever flaps, lids and doors are required.

Installation

Is extremely simple since the TILA continuous hinge is supplied in the open position using spacers and with holes already pre-drilled, ready for installation.

1. Attach the TILA continuous hinge to door, flap or lid
2. Fit the installation element to the installation frame and attach the 2nd blade of the TILA continuous hinge to it
3. If you open the door, flap or lid further out the spacers fall out and the door, flap or lid is hinged and ready to use

As with many “synthetic“ materials, care should be taken when subjecting the hinge to specific and specialised influences which may have unexpected detrimental effects. These include, amongst others hydrolysis, microbe infestation, sudden mechanical stresses (e.g. sudden opening) in conjunction with extremely low temperatures, corrosive acids, alkaline solutions and cleaning agent additives.

Moreover, we would ask you to consult us if you have any enquiries so we can provide you with optimum advice.
The above mentioned technical data, information and recommendations are intended as a guide but is not binding! These reflect our latest knowledge at the time this product information was submitted for printing and does not exempt the user from carrying out their own precise examination of the potential uses for our products in each individual case.

www.METALIKA-KACIN.com

All technical specifications contained in this brochure are approximate and no guarantee is given as to their accuracy. Designs are subject to change.

Aluminium range - Hinges
Various hinges

TILA continuous hinge 22/180° „Super“

- Temperature resistant from approx. -40°C to approx. +80°C short periods +120°C
- Without any mechanical damage
- Hydrolysis and bacteria-resistant

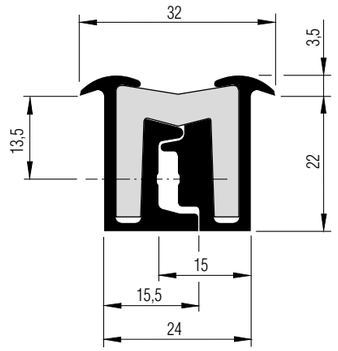

Pack Size: 2 off Sealed in plastic wrapping.
Materials: Aluminium clamping profile AlMgSi 0.5, anodised, E6 EV1, matt silver colour, Polyurethane elastomer plastic profile, black

Length[1] [mm]	Installation width [mm]	depth [mm]	Hole ø [mm]	gap [mm]	Holes [Pieces]	Weight approx. [kg/each]	Article No.
1800	24	22	4	100	18	1.900	631 218
2000	24	22	4	100	20	2.100	631 220
2200	24	22	4	100	22	2.350	631 222
2400	24	22	4	100	24	2.550	631 224
2700	24	22	4	100	27	3.000	631 227
3000	24	22	4	100	30	3.250	631 230

[1] Special lengths/special bores and distances between holes available on request

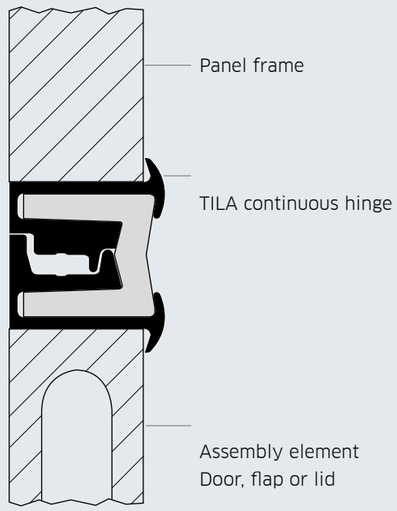

Figure 2

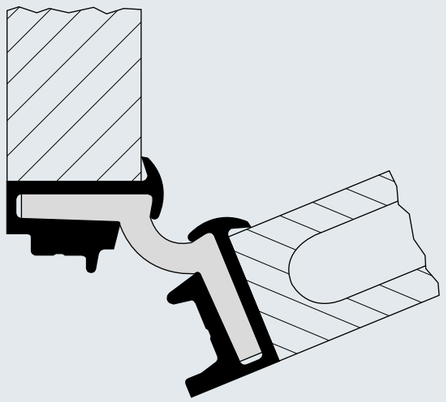

Figure 3

Suggested installation, non-binding - particularly important for flaps and lids.
The TILA 22/180° continuous hinge should be installed as shown in Figure 2 and 3.
Note the correct arrangement of the various aluminium clamping profiles on the panel and assembly element.

TILA continuous hinge drawings shown in the scale of 1:1.

All technical specifications contained in this brochure are approximate and no guarantee is given as to their accuracy. Designs are subject to change.

www.METALIKA-KACIN.com

TILA continuous hinge 29/180° „Super“

- Temperature resistant from approx. -40°C to approx +80°C, short periods +120°C
- Without any mechanical damage
- Hydrolysis and bacteria-resistant

Pack Size: 2 off sealed in plastic wrapping.
Materials: Aluminium clamping profile AlMgSi 0.5, anodised, E6 EV1, matt silver colour[1], Polyuethane elastomer plastic profile, black

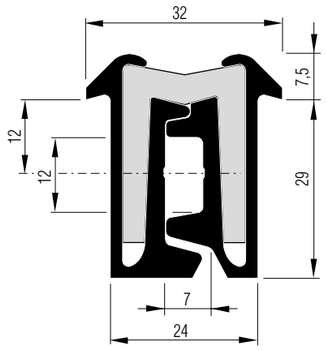

Length[1] [mm]	Installation width [mm]	depth [mm]	Hole ø [mm]	gap [mm]	Holes [Pieces]	Weight approx. [kg/each]	Article No.
1800	24	29	5.0	200	9	2.600	631 238
2000	24	29	5.0	200	10	2.900	631 240
2200	24	29	5.0	200	11	3.150	631 242
2400	24	29	5.0	200	12	3.450	631 244
2500	24	29	5.0	200	13	3.800	631 245
2700	24	29	5.0	200	13	4.100	631 247
3000	24	29	5.0	200	15	4.600	631 250
3500	24	29	5.0	200	17	5.400	631 255

[1] Special lengths/special bores and distances between holes available on request

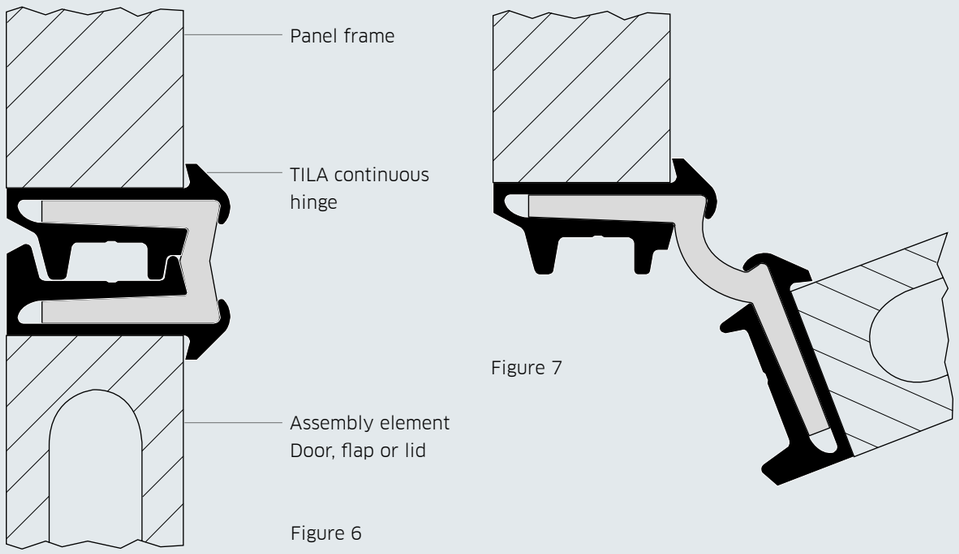

Suggested installation, non-binding - particularly important for flaps and lids.
Note the correct arrangement of the various aluminium clamping profiles on the panel and assembly element!

TILA continuous hinge drawings shown in the scale of 1:1.

All technical specifications contained in this brochure are approximate and no guarantee is given as to their accuracy. Designs are subject to change.

www.METALIKA-KACIN.com

TILA continuous hinge 29/270° „Super“

This TILA continuous hinge offers a 270° opening angle.
The non-binding installation suggestions set out below, using the example of a rear door and frame assembly on a commercial vehicle, clearly show:

- Door outer surface flush with the corner post, giving longer loading area
- „Knuckle“ hinge - rear protrusion only approx. 11 mm: An advantage for trailers with short coupling systems!
- Temperature resistant from approx. -40°C to approx. +80°C, short periods +120°C
- Without any mechanical damage. Hydrolysis and bacteria-resistant.

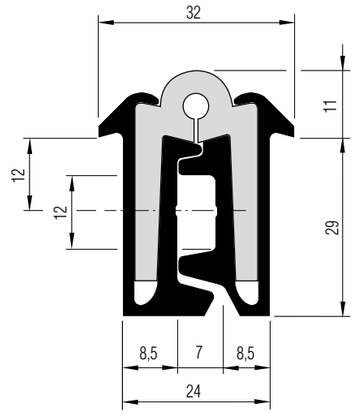

Pack Size: 2 off sealed in plastic wrapping.
Materials: Aluminium clamping profile AlMgSi 0.5, anodised, E6 EV1, matt silver colour, Polyurethane elastomer plastic profile, black

Length[1] [mm]	Installation width [mm]	depth [mm]	Hole ø [mm]	gap [mm]	Holes [Pieces]	Weight approx. [kg/each]	Article No.
2200	24	29	5.0	200	11	3.230	631 262
2500	24	29	5.0	200	13	3.900	631 265
3000	24	29	5.0	200	15	4.700	631 270

[1] Special lengths/special bores and distances between holes available on request

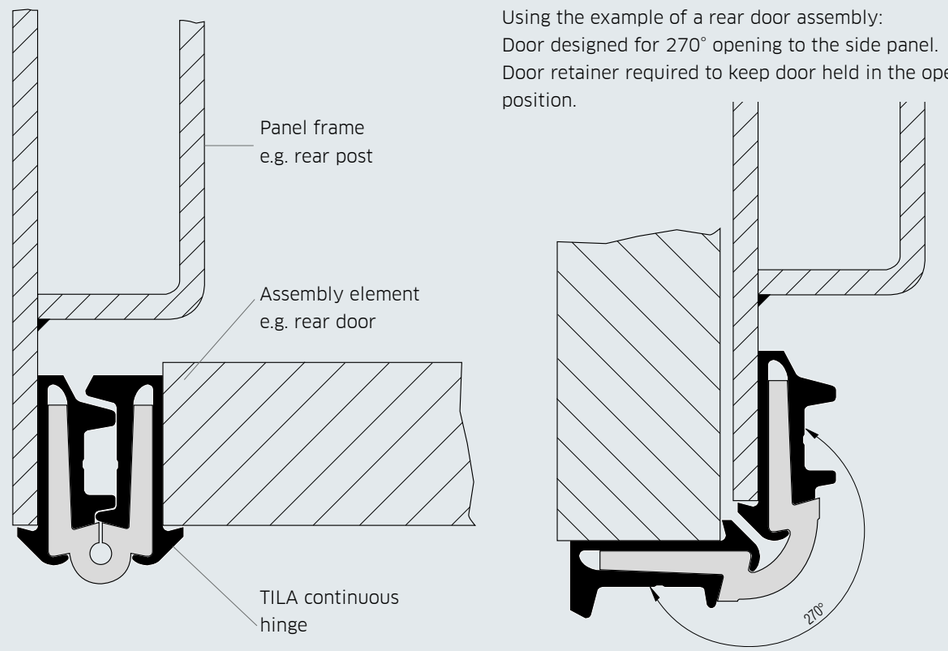

TILA continuous hinge drawings shown in the scale of 1:1.

All technical specifications contained in this brochure are approximate and no guarantee is given as to their accuracy. Designs are subject to change.

www.METALIKA-KACIN.com

Aluminium profile hinge

Suitable solely for horizontal hinged flaps and lids - not for doors! Absolute precision, must only be dismantled in the open position!

Length:	6000 mm
Material:	Aluminium AlMgSi 0.8, F28 Flap profile (631 402) mill finish Frame profile (631 404) anodised E6 EV1, matt silver colour
Weight:	Combined (both profiles) approx. 1.100 kg/m
Article No.	**631 402** – Flap profile **631 404** – Frame profile

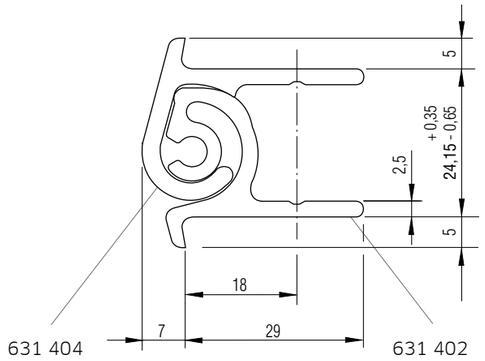

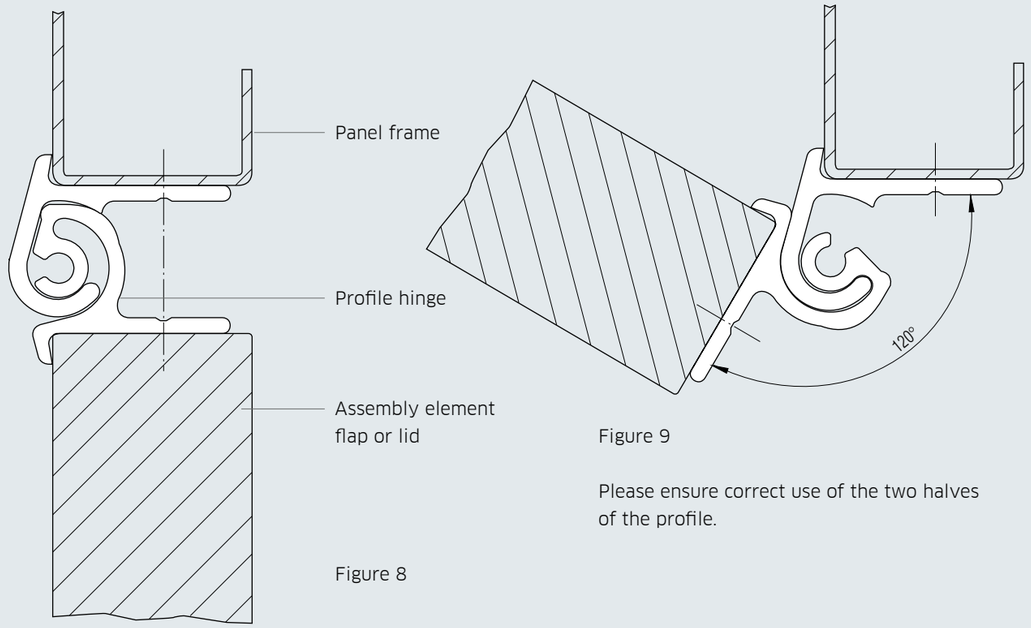

Figure 9

Please ensure correct use of the two halves of the profile.

Figure 8

Rainwater channels

The frame profile Article No. 631 404 is ideal for use as a rainwater channel. See adjacent diagram:

Length:	6000 mm
Material:	AlMgSi 0.8, F28, anodised, E6 EV1, colour silver
Weight:	approx. 0.500 kg/m

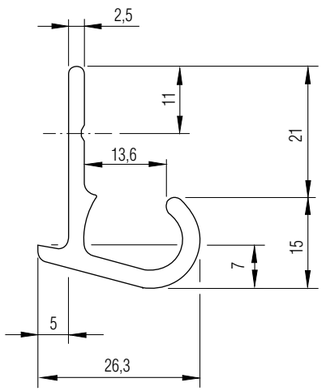

631 404

TILA continuous hinge drawings shown in the scale of 1:1.

www.METALIKA-KACIN.com
All technical specifications contained in this brochure are approximate and no guarantee is given as to their accuracy. Designs are subject to change.

Continuous hinges 180° Recessed lid stay set

Hinge blade 152 with joggle

- 9 mm high, smooth
- Three fixing holes, ø 6.5 mm

Knuckle pin ø:	15 mm
Knuckle pin height:	19.5 mm
Hinge pin ø:	8 mm
Material:	631 330 – Aluminium, mill finish 631 332 – Aluminium, anodised[1]
Weight:	approx. 0.150 kg/each
Article No.	**631 330** – Aluminium, mill finish **631 332** – Aluminium, anodised[1]
Replacement part:	Hinge bushing, grey - Article No. 631 339

[1] Packed in polybag

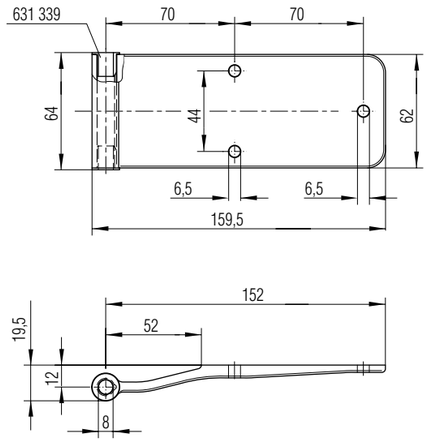

Plastic washer

- Accessories for hinge 631 330/332.

Material thickness:	4 mm
Article No.	**631 338**

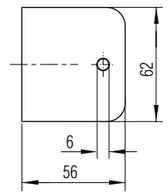

Hinge bracket 32 mm

- Screw-on hinge bracket.
- Two different installation options,
- see diagram on page 63.02.01.14

Material:	631 334, Steel, electro galvanised 631 335, Stainless steel
Weight:	approx 0.078 kg/each
Article No.	**631 334** **631 335**

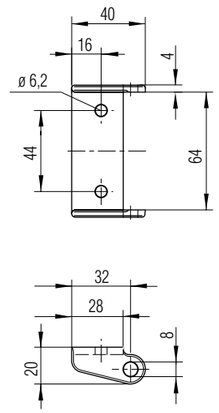

www.METALIKA-KACIN.com
All technical specifications contained in this brochure are approximate and no guarantee is given as to their accuracy. Designs are subject to change.

Continuous hinges 270° / Type 257

Hinge blade 257/270°

- Extra slim blade design
- Knuckle with injection moulded plastic sockets with outer collars - minimal friction against the bracket eyes
- Self-lubricating effect for the bolts
- Packed in polybag

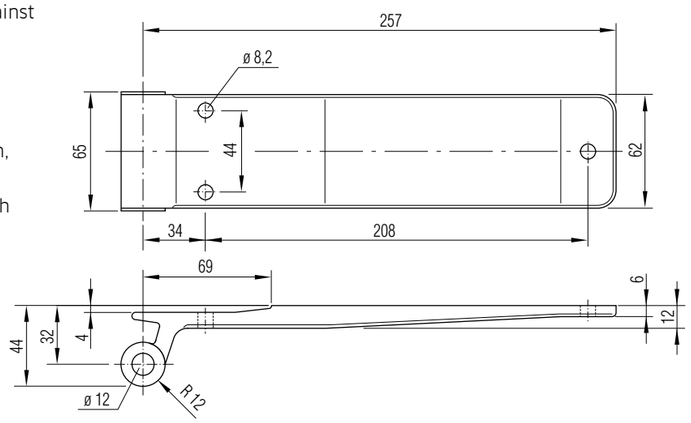

Material:	631 535 – Aluminium, mill finish
Weight:	approx. 0.455 kg/each
Article No.	**631 535**

Note
An aluminium with joggle washer (Article No. 631 539) is always supplied with the above-mentioned hinges.

Replacement part:	Plastic bushing 631 595

Hinge blade 257/270°

- Extra slim blade design
- Knuckle with injection moulded plastic sockets with outer collars - minimal friction against the bracket eyes
- Self-lubricating effect for the bolts

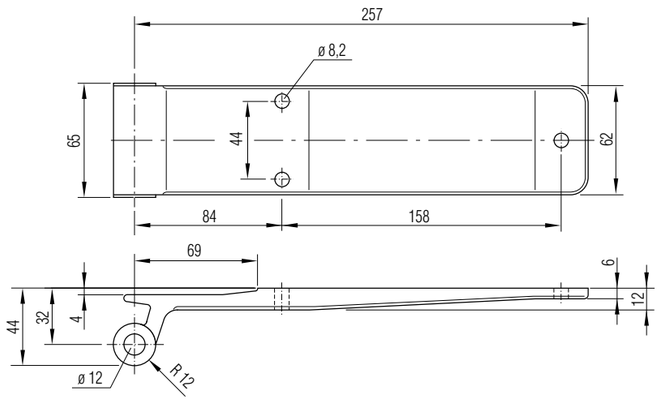

Material:	631 532 – Aluminium, mill finish 631 533 – Aluminium, anodised[1]
Weight:	approx. 0.455 kg/each
Article No.	**631 532** **631 533**

Replacement part:	Plastic bushing 631 595

[1] Packed in polybag.

Note:
The aluminium hinges can be secured faster and cheaply using our TIFAS blind rivets (429 112 - 429 116) Further information available on request.

www.METALIKA-KACIN.com
All technical specifications contained in this brochure are approximate and no guarantee is given as to their accuracy. Designs are subject to change.

Aluminium range - Hinges
Various hinges

Continuous hinges 270° Type 307

Hinge blade 257/270°

- Extra slim blade design
- Knuckle with injection moulded plastic sockets with outer collars - minimal friction against the bracket eyes
- Self-lubricating effect for the bolts
- Packed in polybag

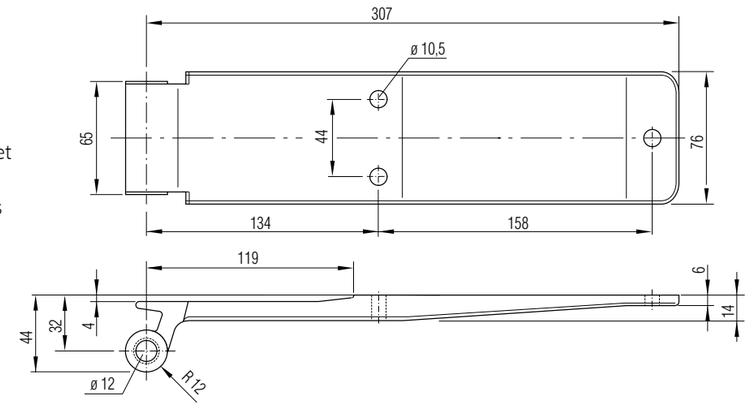

Material:	631 586 - Aluminium, mill finish 631 589 - Aluminium, anodised[1]
Weight:	approx. 0.675 kg/each
Article No.	**631 586** **631 589**

Replacement part:	Plastic bushing 631 595

[1] Packed in polybag.

Note:
The aluminium hinges can be secured faster and cheaply using our lockbolt systems. Further information available on request.

www.METALIKA-KACIN.com
All technical specifications contained in this brochure are approximate and no guarantee is given as to their accuracy. Designs are subject to change.