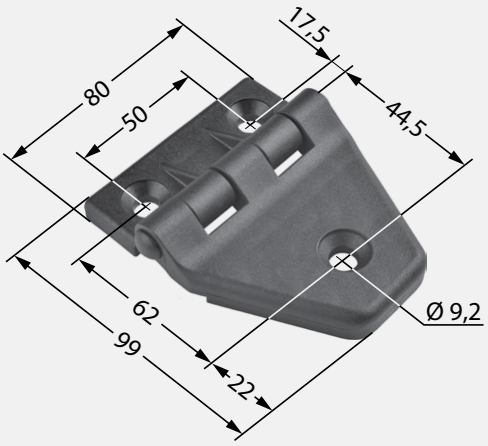

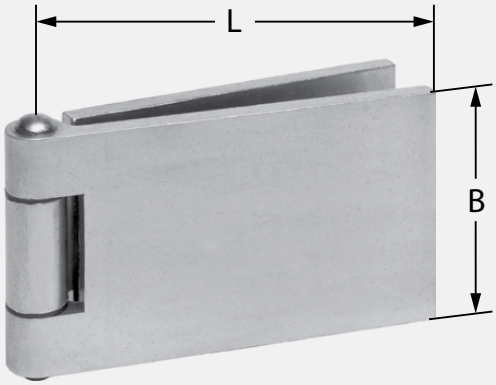

Tečaji za karoserije
Body hinges

METALIKA KACIN

Slovenija
(+386) 04 510 53 60
info@metalika-kacin.com
Hrvatska
(+385) 051 213 060
hrvatska@metalika-kacin.com
Srbija
(+381) 011 25 21 756
srbija@metalika-kacin.com

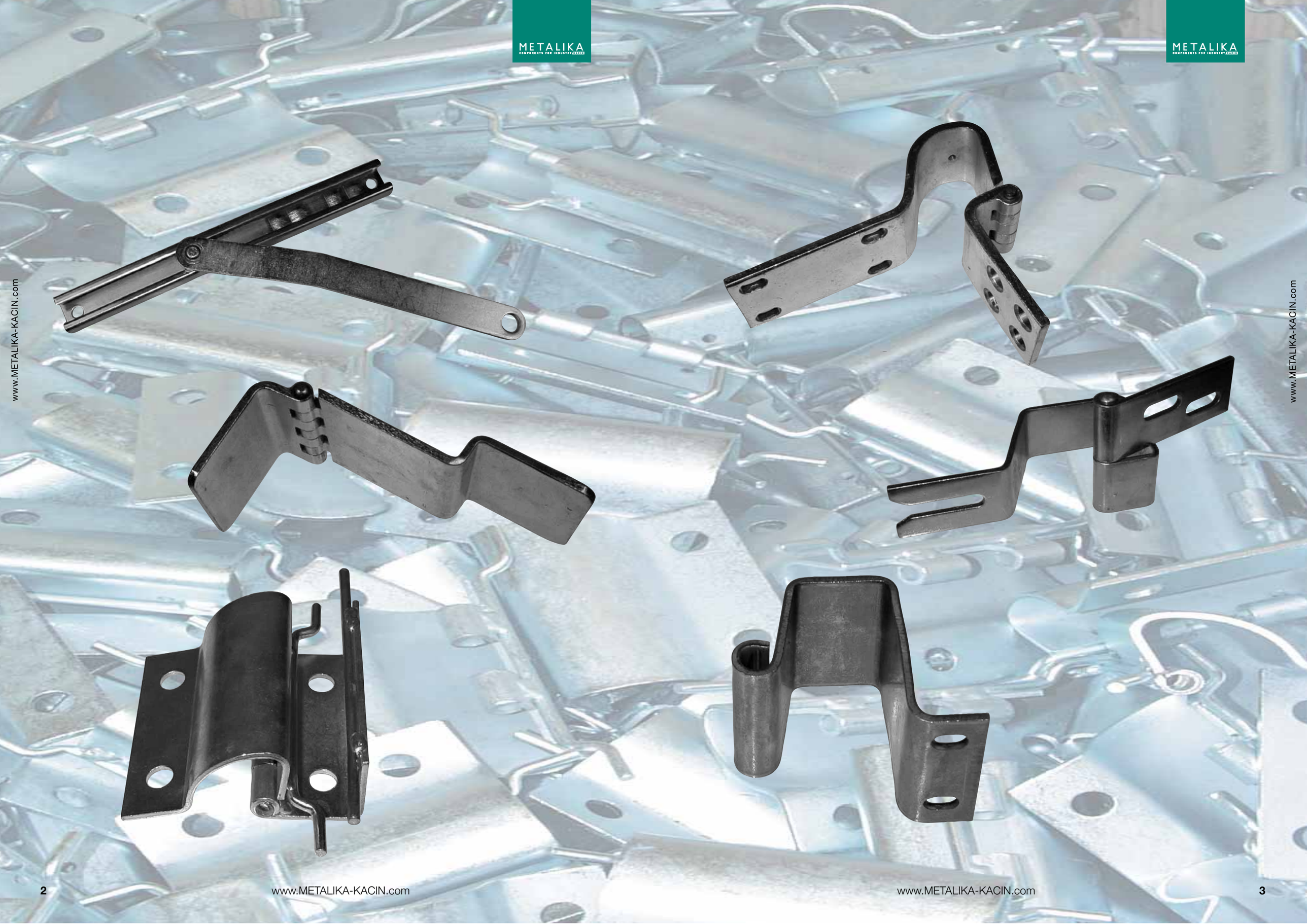

METALIKA
COMPONENTS FOR INDUSTRY

METALIKA
COMPONENTS FOR INDUSTRY

www.METALIKA-KACIN.com

METALIKA
COMPONENTS FOR INDUSTRY

www.METALIKA-KACIN.com

www.METALIKA-KACIN.com

www.METALIKA-KACIN.com

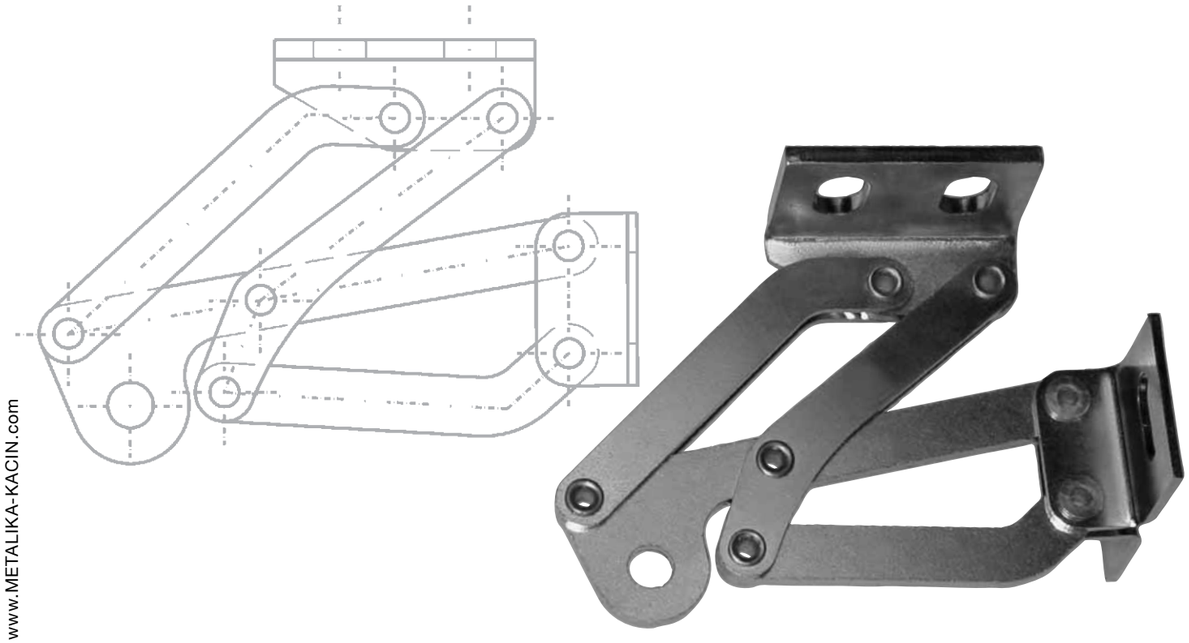

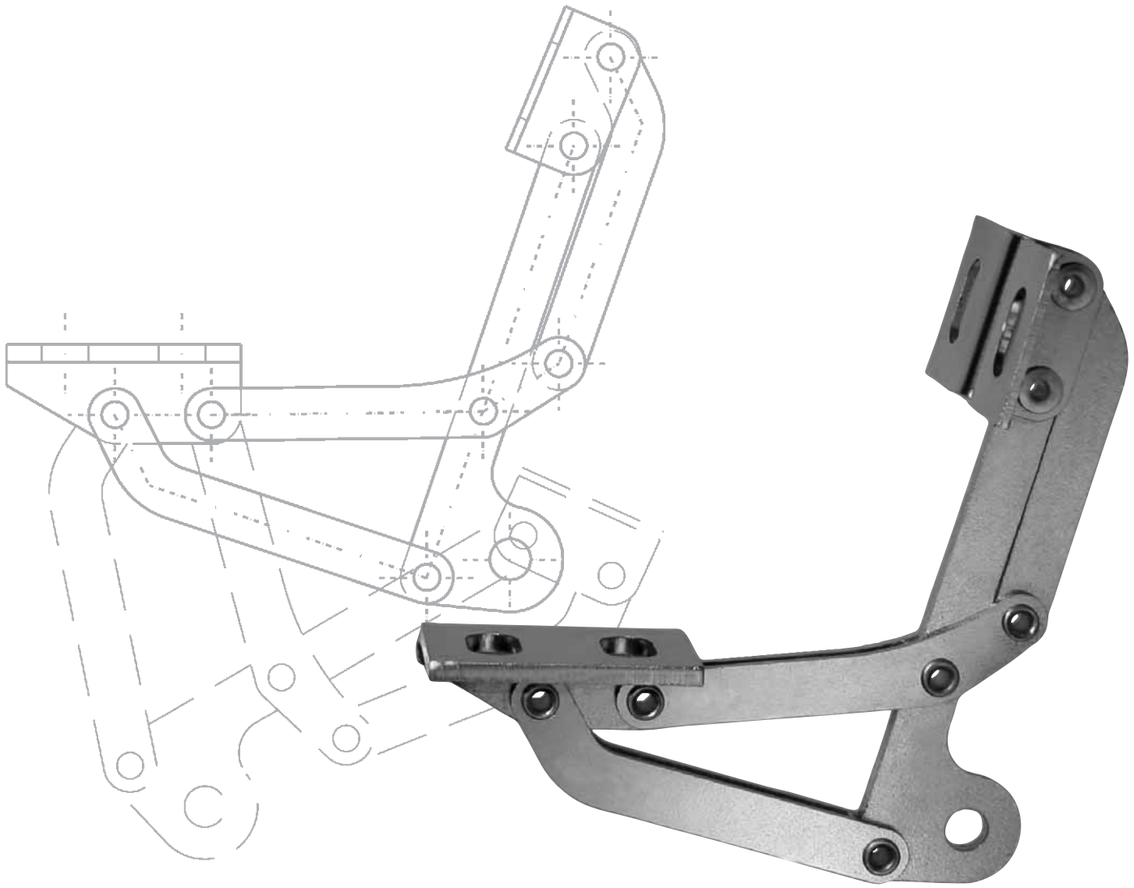

METALIKA
COMPONENTS FOR INDUSTRY

www.METALIKA-KACIN.com

Profilni tečaji za vozila, prikolice in vagone

Profile hinges for vehicle trailer and wagon construction

Produktgruppe 1

Profilscharniere
für den Fahrzeug-, Anhänger- und Waggonbau

Abbildung Profile:

Standardprofilmaterial aus Werkstoff R-St 37-2 zur Herstellung von Wagentürscharnieren, Niet- und Bolzengelenkbändern nach DIN 31211

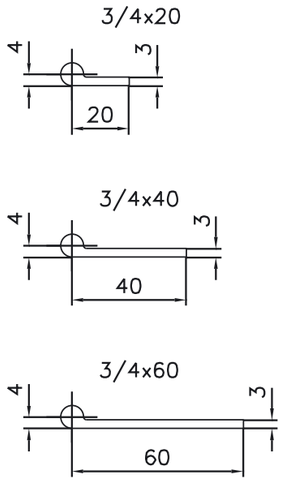

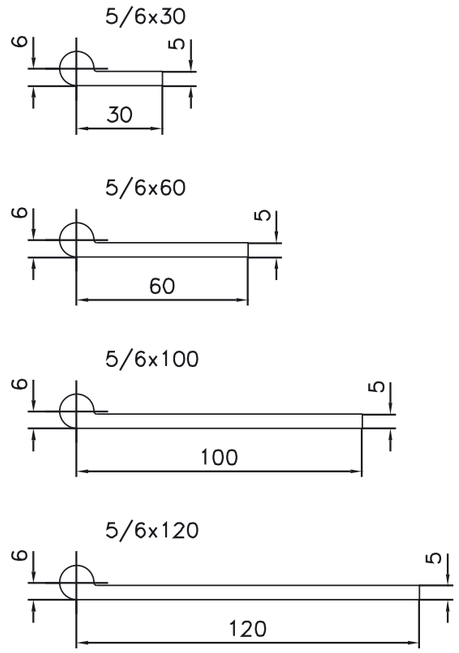

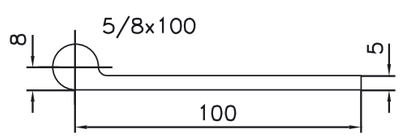

www.METALIKA-KACIN.com

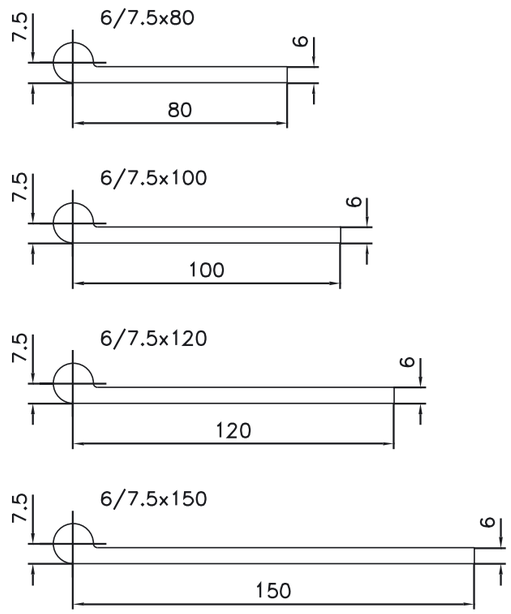

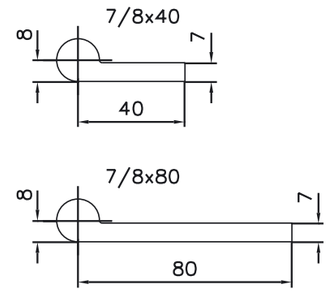

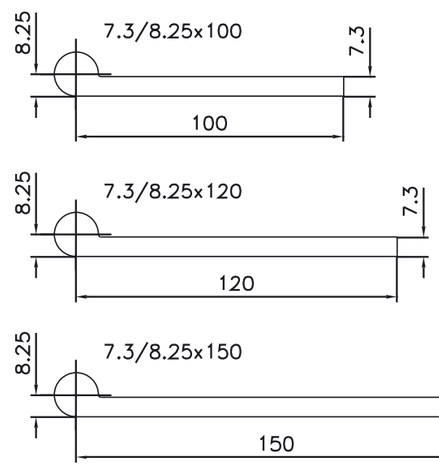

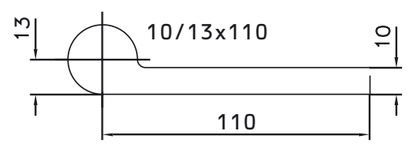

www.METALIKA-KACIN.com

Typ 20 Wagentürscharniere Stahl-roh, ungelocht, mit Halbrundkopfstift Stahl-roh

201 .. .. mit Halbrundkopfstift Stahl-roh

Artikel-Nr.:	A	B1	B2	C	D	Gewerbe-teilung
	mm	mm	mm	mm	mm	
... 30 31	30	40	40	3	4	5
... 30 32	30	60	60	3	4	5
... 40 31	40	20	20	3	4	5
... 40 32	40	40	40	3	4	5
... 40 33	40	60	60	3	4	5
... 50 31	50	40	40	3	4	5
... 50 32	50	60	60	3	4	5
... 60 31	60	40	40	3	4	5
... 60 32	60	60	60	3	4	5
... 30 51	30	30	30	5	6	5
... 30 52	30	60	60	5	6	5
... 30 53	30	80	80	5	6	5
... 30 54	30	100	100	5	6	5
... 40 51	40	30	30	5	6	5
... 40 52	40	60	60	5	6	5
... 40 53	40	80	80	5	6	5
... 40 54	40	100	100	5	6	5
... 40 55	40	120	120	5	6	5
... 50 51	50	30	30	5	6	5
... 50 52	50	60	60	5	6	5
... 50 53	50	80	80	5	6	5
... 50 54	50	100	100	5	6	5

www.METALIKA-KACIN.com

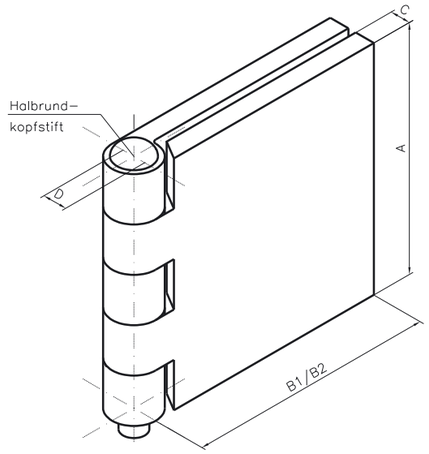

201 .. .. mit Halbrundkopfstift Stahl-roh

Artikel-Nr.:	A	B1	B2	C	D	Gewerbe-teilung
	mm	mm	mm	mm	mm	
... 50 55	50	120	120	5	6	5
... 60 51	60	30	30	5	6	5
... 60 52	60	60	60	5	6	5
... 60 53	60	80	80	5	6	5
... 60 54	60	100	100	5	6	5
... 80 51	80	30	30	5	6	5
... 80 52	80	60	60	5	6	5
... 80 53	80	80	80	5	6	5
... 10 51	100	30	30	5	6	5
... 10 52	100	60	60	5	6	5
... 10 53	100	80	80	5	6	5
... 40 61	40	80	80	6	8	5
... 50 61	50	80	80	6	8	5
... 50 62	50	100	100	6	8	5
... 50 63	50	120	120	6	8	5
... 60 61	60	80	80	6	8	5
... 60 62	60	100	100	6	8	5
... 60 64	60	150	150	6	8	5
... 70 61	70	80	80	6	8	5
... 70 62	70	100	100	6	8	5
... 70 63	70	120	120	6	8	5
... 80 61	80	80	80	6	8	5

www.METALIKA-KACIN.com

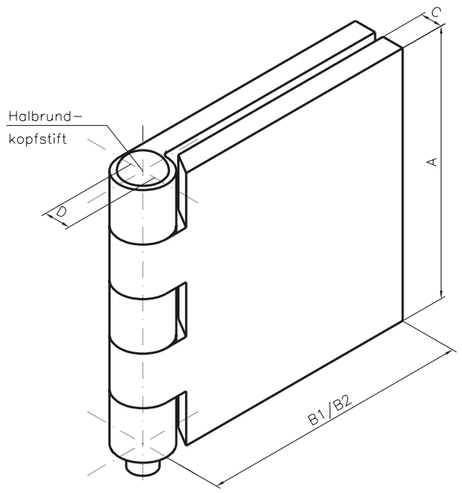

201 .. .. mit Halbrundkopfstift Stahl-roh

Artikel-Nr.:	A	B1	B2	C	D	Gewerbe-teilung
	mm	mm	mm	mm	mm	
... 80 62	80	100	100	6	8	5
... 80 63	80	120	120	6	8	5
... 80 64	80	150	150	6	8	5
... 10 61	100	80	80	6	8	5
... 10 62	100	100	100	6	8	5
... 10 63	100	120	120	6	8	5
... 60 71	60	40	40	7	8	5
... 60 72	60	80	80	7	8	5
... 60 73	60	100	100	7	8	5
... 60 74	60	120	120	7	8	5
... 60 75	60	150	150	7	8	5
... 70 71	70	80	80	7	8	5
... 70 72	70	100	100	7	8	5
... 70 73	70	120	120	7	8	5
... 70 74	70	150	150	7	8	5
... 80 71	80	40	40	7	8	5
... 80 72	80	80	80	7	8	5
... 80 73	80	100	100	7	8	5
... 80 74	80	120	120	7	8	5
... 80 75	80	150	150	7	8	5
... 10 71	100	80	80	7	8	5
... 10 72	100	100	100	7	8	5
... 10 73	100	120	120	7	8	5
... 10 74	100	150	150	7	8	5
... 10 11	100	110	110	10	13	5

www.METALIKA-KACIN.com

METALIKA
COMPONENTS FOR INDUSTRY

Typ 20 Wagentürscharniere Stahl-roh, ungelocht, mit Messing-Halbrundkopfstift

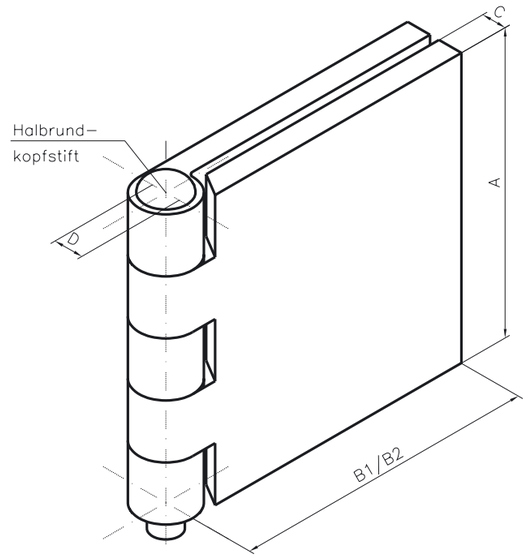

202 .. .. mit Messing-Halbrundkopfstift

Artikel-Nr.:	A	B1	B2	C	D	Gewerbe-teilung
	mm	mm	mm	mm	mm	
... 40 31	40	20	20	3	4	5
... 40 32	40	40	40	3	4	5
... 40 33	40	60	60	3	4	5

www.METALIKA-KACIN.com

202 .. .. mit Messing-Halbrundkopfstift

Artikel-Nr.:	A	B1	B2	C	D	Gewerbe-teilung
	mm	mm	mm	mm	mm	
... 30 51	30	30	30	5	6	5
... 30 52	30	60	60	5	6	5
... 30 53	30	80	80	5	6	5
... 30 54	30	100	100	5	6	5
... 40 51	40	30	30	5	6	5
... 40 52	40	60	60	5	6	5
... 40 53	40	80	80	5	6	5
... 40 54	40	100	100	5	6	5
... 50 51	50	30	30	5	6	5
... 50 52	50	60	60	5	6	5
... 50 53	50	80	80	5	6	5
... 50 54	50	100	100	5	6	5
... 60 51	60	30	30	5	6	5
... 60 52	60	60	60	5	6	5
... 60 53	60	80	80	5	6	5
... 60 54	60	100	100	5	6	5
... 50 61	50	80	80	6	8	5
... 50 62	50	100	100	6	8	5
... 50 63	50	120	120	6	8	5
... 60 61	60	80	80	6	8	5
... 60 62	60	100	100	6	8	5
... 60 63	60	120	120	6	8	5
... 70 61	70	80	80	6	8	5
... 70 62	70	100	100	6	8	5
... 70 63	70	120	120	6	8	5
... 80 61	80	80	80	6	8	5
... 80 62	80	100	100	6	8	5
... 80 63	80	120	120	6	8	5
... 10 61	100	80	80	6	8	5
... 10 62	100	100	100	6	8	5
... 10 63	100	120	120	6	8	5

www.METALIKA-KACIN.com

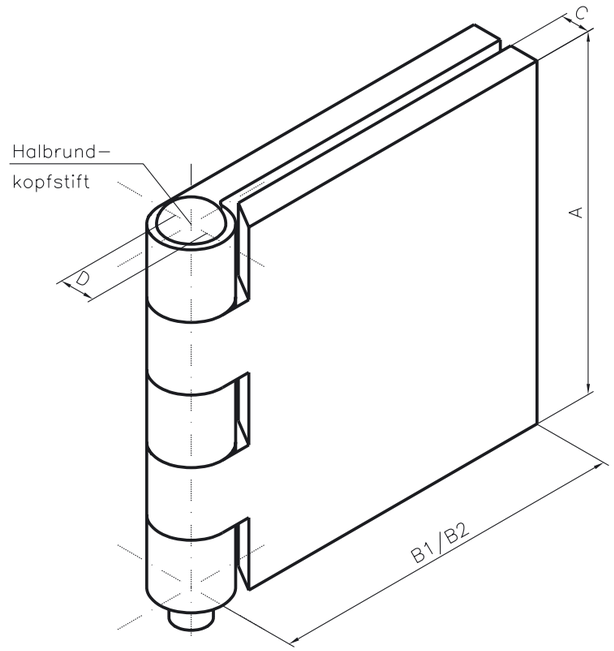

202 .. .. mit Messing-Halbrundkopfstift

Artikel-Nr.:	A	B1	B2	C	D	Gewerbe-teilung
	mm	mm	mm	mm	mm	
... 60 71	60	40	40	7	8	5
... 60 72	60	80	80	7	8	5
... 60 73	60	100	100	7	8	5
... 60 74	60	120	120	7	8	5
... 60 75	60	150	150	7	8	5
... 70 71	70	80	80	7	8	5
... 70 72	70	100	100	7	8	5
... 70 73	70	120	120	7	8	5
... 70 74	70	150	150	7	8	5
... 80 71	80	40	40	7	8	5
... 80 72	80	80	80	7	8	5
... 80 73	80	100	100	7	8	5
... 80 74	80	120	120	7	8	5
... 80 75	80	150	150	7	8	5
... 10 71	100	80	80	7	8	5
... 10 72	100	100	100	7	8	5
... 10 73	100	120	120	7	8	5
... 10 74	100	150	150	7	8	5

www.METALIKA-KACIN.com

Typ 20 Wagentürscharniere Stahl-roh, ungelocht, mit Schmierstift, Schmiernippel und Zahnscheibe

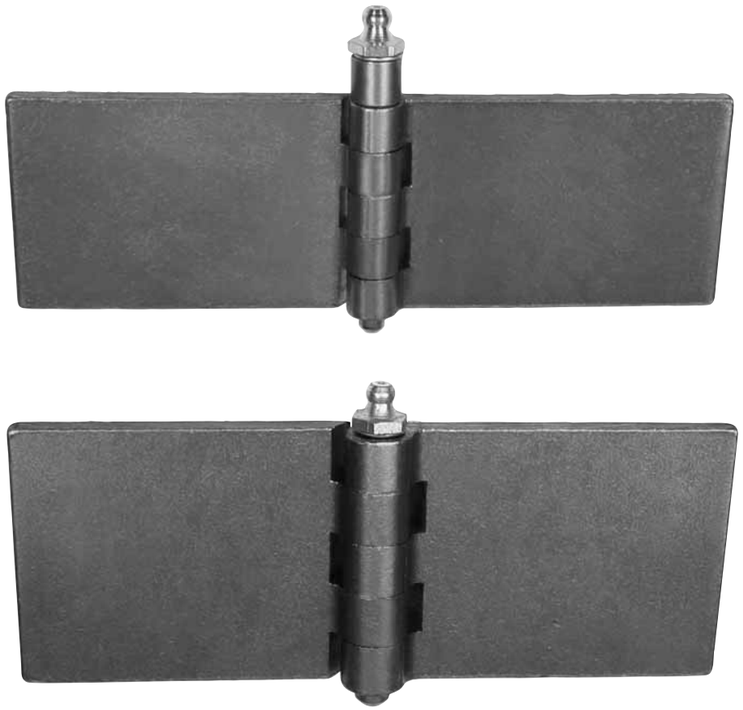

203 .. .. mit Schmierstift Stahl-roh

Artikel-Nr.:	A	B1	B2	C	D	Gewerbe-teilung
	mm	mm	mm	mm	mm	
... 40 51	40	30	30	5	6	5
... 40 52	40	60	60	5	6	5
... 40 53	40	80	80	5	6	5
... 40 54	40	100	100	5	6	5
... 40 55	40	120	120	5	6	5
... 50 51	50	30	30	5	6	5
... 50 52	50	60	60	5	6	5
... 50 53	50	80	80	5	6	5
... 50 54	50	100	100	5	6	5
... 50 55	50	120	120	5	6	5
... 60 51	60	30	30	5	6	5
... 60 52	60	60	60	5	6	5
... 60 53	60	80	80	5	6	5
... 60 54	60	100	100	5	6	5
... 60 55	60	120	120	5	6	5

www.METALIKA-KACIN.com

METALIKA
COMPONENTS FOR INDUSTRY

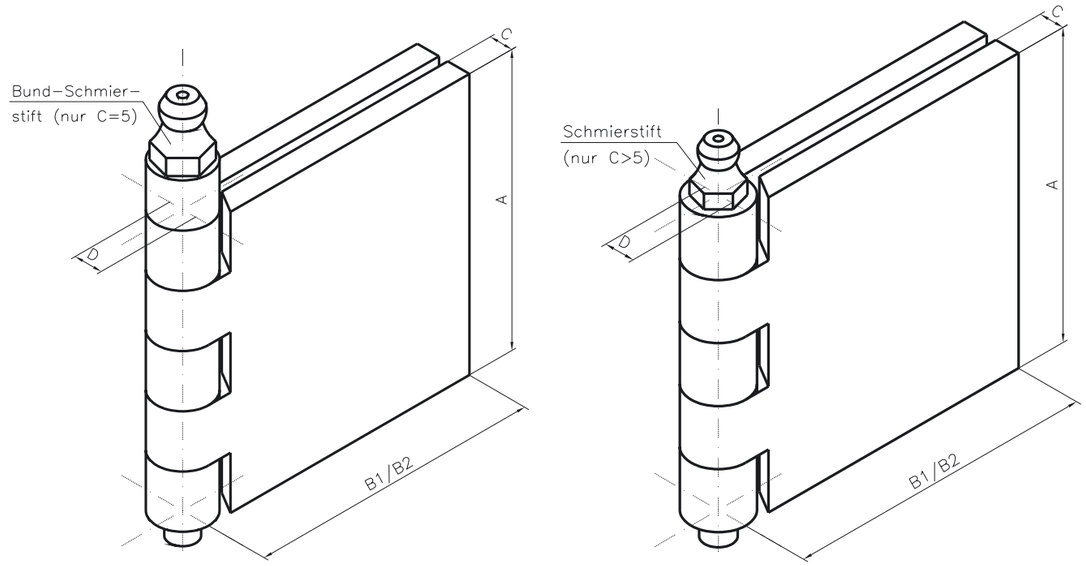

203 .. .. mit Schmierstift Stahl-roh

Artikel-Nr.:	A	B1	B2	C	D	Gewerbe-teilung
	mm	mm	mm	mm	mm	
... 40 61	40	80	80	6	8	5
... 50 61	50	80	80	6	8	5
... 50 62	50	100	100	6	8	5
... 50 63	50	120	120	6	8	5
... 60 61	60	80	80	6	8	5
... 60 62	60	100	100	6	8	5
... 60 63	60	120	120	6	8	5
... 70 61	70	80	80	6	8	5
... 70 62	70	100	100	6	8	5
... 70 63	70	120	120	6	8	5
... 80 61	80	80	80	6	8	5
... 80 62	80	100	100	6	8	5
... 80 63	80	120	120	6	8	5
... 10 61	100	80	80	6	8	5
... 10 62	100	100	100	6	8	5
... 10 63	100	120	120	6	8	5

www.METALIKA-KACIN.com

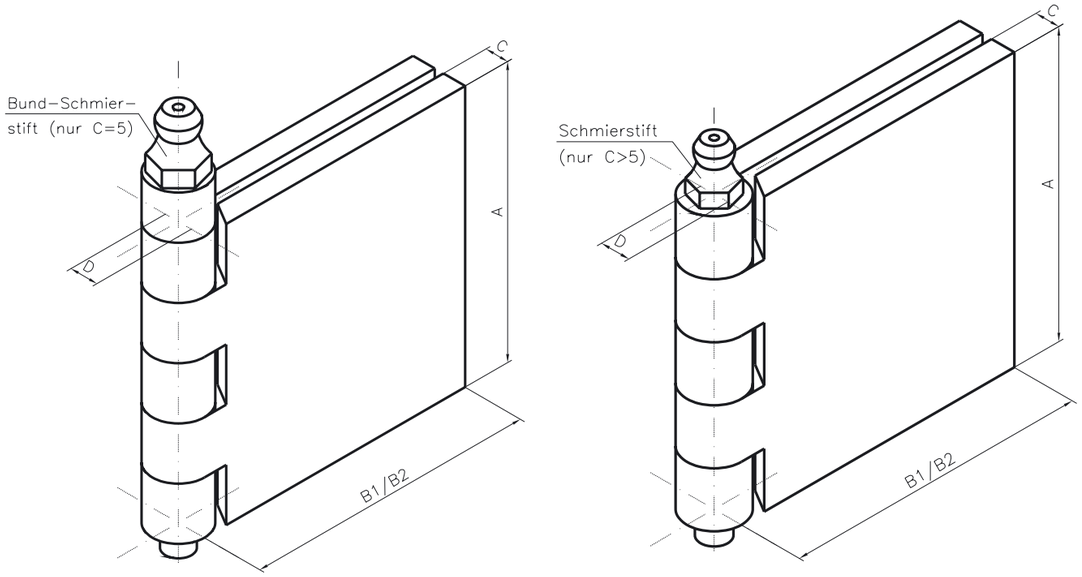

203 .. .. mit Schmierstift Stahl-roh

Artikel-Nr.:	A	B1	B2	C	D	Gewerbe-teilung
	mm	mm	mm	mm	mm	
... 60 71	60	40	40	7	8	5
... 60 72	60	80	80	7	8	5
... 60 73	60	100	100	7	8	5
... 60 74	60	120	120	7	8	5
... 60 75	60	150	150	7	8	5
... 70 71	70	80	80	7	8	5
... 70 72	70	100	100	7	8	5
... 70 73	70	120	120	7	8	5
... 70 74	70	150	150	7	8	5
... 80 71	80	40	40	7	8	5
... 80 72	80	80	80	7	8	5
... 80 73	80	100	100	7	8	5
... 80 74	80	120	120	7	8	5
... 80 75	80	150	150	7	8	5
... 10 71	100	80	80	7	8	5
... 10 72	100	100	100	7	8	5
... 10 73	100	120	120	7	8	5
... 10 74	100	150	150	7	8	5
... 10 11	100	110	110	10	13	5

METALIKA
COMPONENTS FOR INDUSTRY

Typ 20 Wagentürscharniere Stahl-roh, ungelocht, mit Halbrundkopfstift Stahl-roh und DU-Buchsen

DU-Lagerwerkstoffe Trocken-Gleitmaterial mit verzinntem Stahlrücken, wartungsfrei

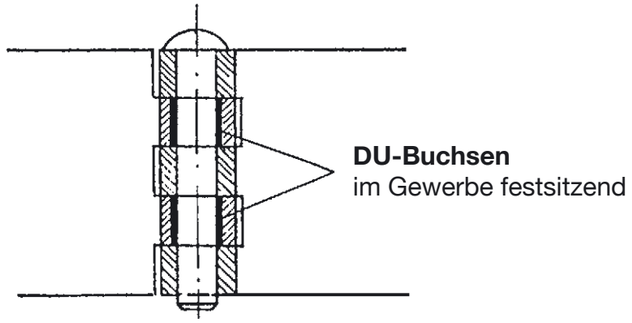

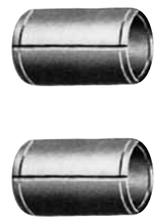

DU-Buchsen

204 .. .. mit Halbrundkopfstift Stahl-roh und DU-Buchsen

Artikel-Nr.:	A	B1	B2	C	D	Gewerbe-teilung
	mm	mm	mm	mm	mm	
... 30 51	30	30	30	5	6	5
... 30 52	30	60	60	5	6	5
... 30 53	30	80	80	5	6	5
... 30 54	30	100	100	5	6	5
... 40 51	40	30	30	5	6	5
... 40 52	40	60	60	5	6	5
... 40 53	40	80	80	5	6	5
... 40 54	40	100	100	5	6	5
... 40 55	40	120	120	5	6	5

DU-Lagerwerkstoffe Trocken-Gleitmaterial mit verzinntem Stahlrücken, wartungsfrei

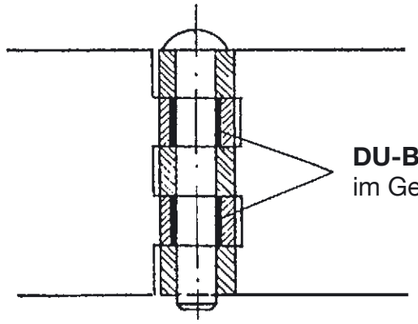

DU-Buchsen
im Gewerbe festsitzend

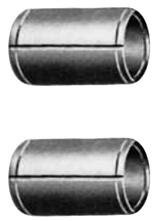

DU-Buchsen

204 .. .. mit Halbrundkopfstift Stahl-roh und DU-Buchsen

Artikel-Nr.:	A	B1	B2	C	D	Gewerbe-teilung
	mm	mm	mm	mm	mm	
... 50 51	50	30	30	5	6	5
... 50 52	50	60	60	5	6	5
... 50 53	50	80	80	5	6	5
... 50 54	50	100	100	5	6	5
... 50 55	50	120	120	5	6	5
... 60 51	60	30	30	5	6	5
... 60 52	60	60	60	5	6	5
... 60 53	60	80	80	5	6	5
... 60 54	60	100	100	5	6	5
... 60 55	60	120	120	5	6	5
... 40 61	40	80	80	6	8	5
... 50 61	50	80	80	6	8	5
... 50 62	50	100	100	6	8	5
... 50 63	50	120	120	6	8	5
... 60 61	60	80	80	6	8	5
... 60 62	60	100	100	6	8	5
... 60 63	60	120	120	6	8	5
... 60 64	60	150	150	6	8	5
... 60 71	60	40	40	7	8	5
... 60 72	60	80	80	7	8	5
... 60 73	60	100	100	7	8	5
... 60 74	60	120	120	7	8	5
... 60 75	60	150	150	7	8	5

www.METALIKA-KACIN.com

Typ 20 Wagentürscharniere Stahl-roh, ungelocht, mit Messing-Halbrundkopfstift und DU-Buchsen

DU-Lagerwerkstoffe Trocken-Gleitmaterial mit verzinntem Stahlrücken, wartungsfrei

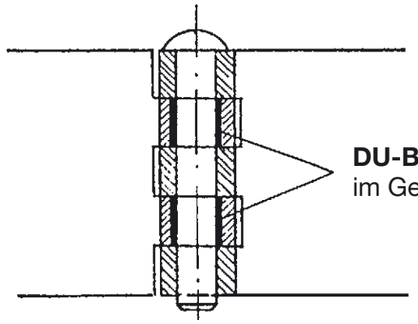

DU-Buchsen
im Gewerbe festsitzend

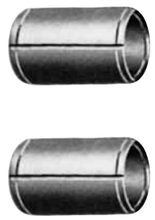

DU-Buchsen

205 .. .. mit Messing-Halbrundkopfstift und DU-Buchsen

Artikel-Nr.:	A	B1	B2	C	D	Gewerbe-teilung
	mm	mm	mm	mm	mm	
... 30 51	30	30	30	5	6	5
... 30 52	30	60	60	5	6	5
... 30 53	30	80	80	5	6	5
... 30 54	30	100	100	5	6	5
... 40 51	40	30	30	5	6	5
... 40 52	40	60	60	5	6	5
... 40 53	40	80	80	5	6	5
... 40 54	40	100	100	5	6	5
... 40 55	40	120	120	5	6	5
... 50 51	50	30	30	5	6	5
... 50 52	50	60	60	5	6	5
... 50 53	50	80	80	5	6	5
... 50 54	50	100	100	5	6	5
... 50 55	50	120	120	5	6	5
... 60 51	60	30	30	5	6	5

www.METALIKA-KACIN.com

DU-Lagerwerkstoffe Trocken-Gleitmaterial mit verzinntem Stahlrücken, wartungsfrei

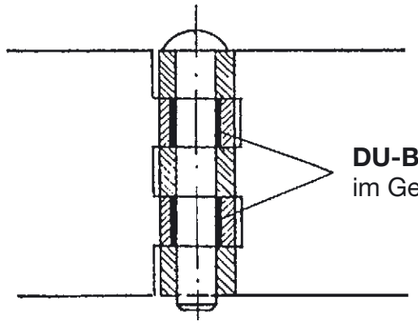

DU-Buchsen
im Gewerbe festsitzend

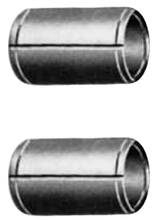

DU-Buchsen

205 .. .. mit Messing-Halbrundkopfstift und DU-Buchsen

Artikel-Nr.:	A	B1	B2	C	D	Gewerbe-teilung
	mm	mm	mm	mm	mm	
... 60 52	60	60	60	5	6	5
... 60 53	60	80	80	5	6	5
... 60 54	60	100	100	5	6	5
... 60 55	60	120	120	5	6	5
... 50 61	50	80	80	6	8	5
... 50 62	50	100	100	6	8	5
... 50 63	50	120	120	6	8	5
... 60 61	60	80	80	6	8	5
... 60 62	60	100	100	6	8	5
... 60 63	60	120	120	6	8	5
... 60 64	60	150	150	6	8	5
... 60 71	60	40	40	7	8	5
... 60 72	60	80	80	7	8	5
... 60 73	60	100	100	7	8	5
... 60 74	60	120	120	7	8	5
... 60 75	60	150	150	7	8	5

www.METALIKA-KACIN.com

Typ 216 Wagentürscharniere aus Aluminiumprofil mit vernietetem Nirosta-Stift

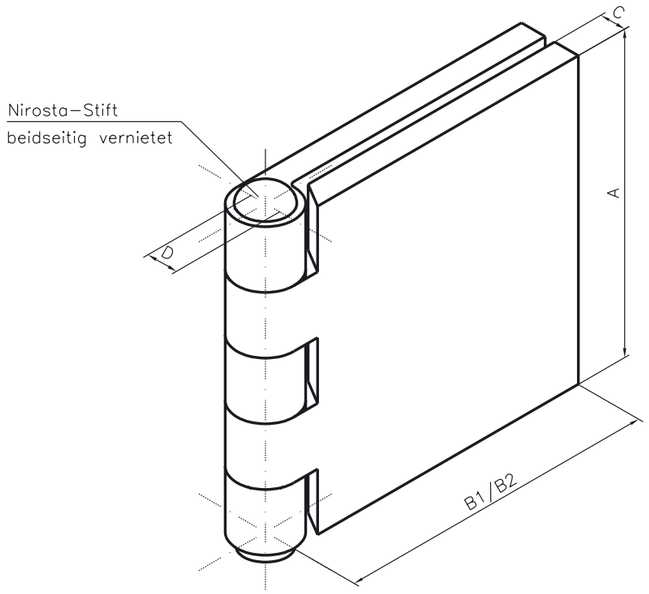

216 .. .. mit vernietetem Nirosta-Stift

Artikel-Nr.:	A	B1	B2	C	D	Gewerbe-teilung
	mm	mm	mm	mm	mm	
... 40 31	40	40	40	3	4	5
... 40 32	40	60	60	3	4	5
... 50 31	50	40	40	3	4	5
... 50 32	50	60	60	3	4	5
... 60 31	60	40	40	3	4	5
... 60 32	60	60	60	3	4	5
... 80 31	80	40	40	3	4	5
... 80 32	80	60	60	3	4	5

www.METALIKA-KACIN.com

Typ 21 Wagentürscharniere Stahl galvanisch-verzinkt, ungelocht, mit Messing-Halbrundkopfstift

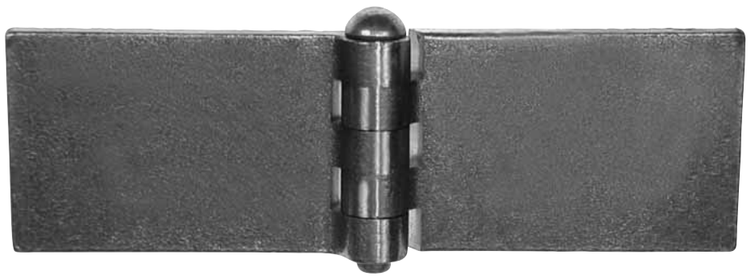

www.METALIKA-KACIN.com

212 .. .. mit Messing-Halbrundkopfstift

Artikel-Nr.:	A	B1	B2	C	D	Gewerbe-teilung
	mm	mm	mm	mm	mm	
... 40 31	40	20	20	3	4	5
... 40 32	40	40	40	3	4	5
... 40 33	40	60	60	3	4	5
... 30 51	30	30	30	5	6	5
... 30 52	30	60	60	5	6	5
... 30 53	30	80	80	5	6	5
... 30 54	30	100	100	5	6	5
... 40 51	40	30	30	5	6	5
... 40 52	40	60	60	5	6	5
... 40 53	40	80	80	5	6	5
... 40 54	40	100	100	5	6	5
... 40 55	40	120	120	5	6	5
... 50 51	50	30	30	5	6	5
... 50 52	50	60	60	5	6	5
... 50 53	50	80	80	5	6	5
... 50 54	50	100	100	5	6	5
... 50 55	50	120	120	5	6	5
... 60 51	60	30	30	5	6	5
... 60 52	60	60	60	5	6	5
... 60 53	60	80	80	5	6	5
... 60 54	60	100	100	5	6	5
... 60 55	60	120	120	5	6	5

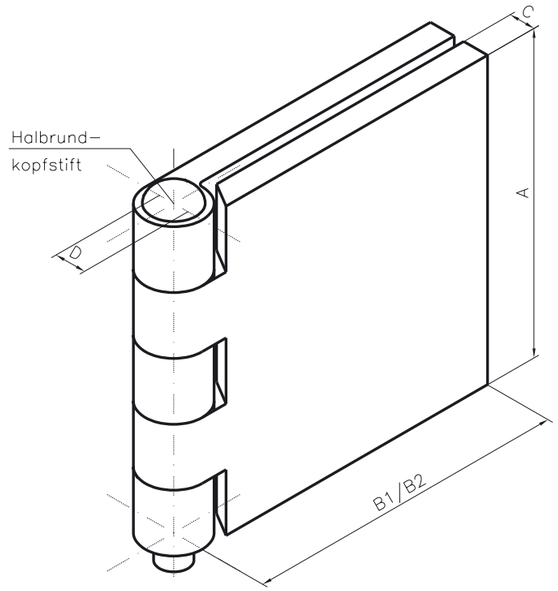

www.METALIKA-KACIN.com

212 .. .. mit Messing-Halbrundkopfstift

Artikel-Nr.:	A	B1	B2	C	D	Gewerbe-teilung
	mm	mm	mm	mm	mm	
... 50 61	50	80	80	6	8	5
... 50 62	50	100	100	6	8	5
... 50 63	50	120	120	6	8	5
... 60 61	60	80	80	6	8	5
... 60 62	60	100	100	6	8	5
... 60 63	60	120	120	6	8	5
... 70 61	70	80	80	6	8	5
... 70 62	70	100	100	6	8	5
... 70 63	70	120	120	6	8	5
... 80 61	80	80	80	6	8	5
... 80 62	80	100	100	6	8	5
... 80 63	80	120	120	6	8	5
... 10 61	100	80	80	6	8	5
... 10 62	100	100	100	6	8	5
... 10 63	100	120	120	6	8	5

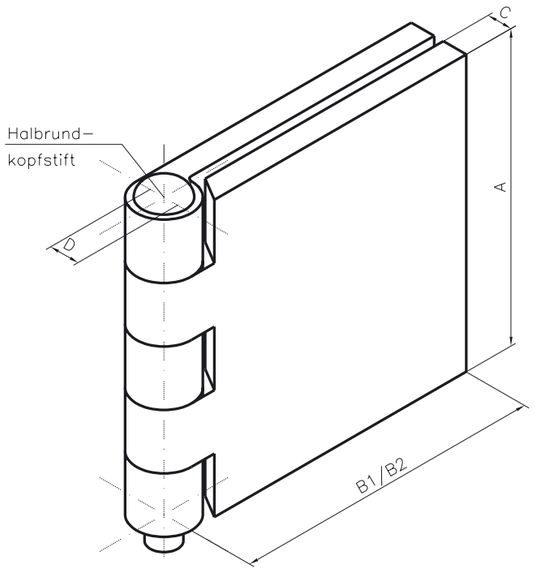

212 .. .. mit Messing-Halbrundkopfstift

Artikel-Nr.:	A	B1	B2	C	D	Gewerbe-teilung
	mm	mm	mm	mm	mm	
... 60 71	60	40	40	7	8	5
... 60 72	60	80	80	7	8	5
... 60 73	60	100	100	7	8	5
... 60 74	60	120	120	7	8	5
... 60 75	60	150	150	7	8	5
... 70 71	70	80	80	7	8	5
... 70 72	70	100	100	7	8	5
... 70 73	70	120	120	7	8	5
... 70 74	70	150	150	7	8	5
... 80 71	80	40	40	7	8	5
... 80 72	80	80	80	7	8	5
... 80 73	80	100	100	7	8	5
... 80 74	80	120	120	7	8	5
... 80 75	80	150	150	7	8	5
... 10 71	100	80	80	7	8	5
... 10 72	100	100	100	7	8	5
... 10 73	100	120	120	7	8	5
... 10 74	100	150	150	7	8	5

www.METALIKA-KACIN.com

METALIKA
COMPONENTS FOR INDUSTRY

Typ 21 Wagentürscharniere Stahl galvanisch-verzinkt, ungelocht, mit Messing-Halbrundkopfstift und DU-Buchsen

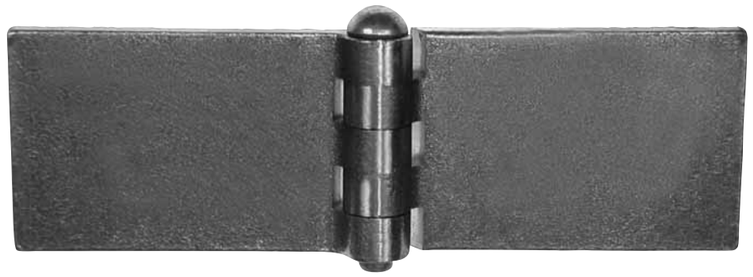

DU-Lagerwerkstoffe Trocken-Gleitmaterial mit verzinntem Stahlrücken, wartungsfrei

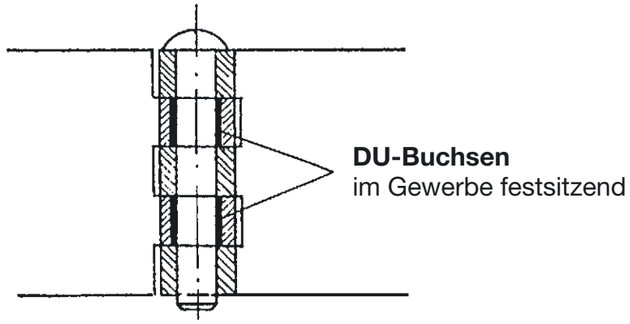

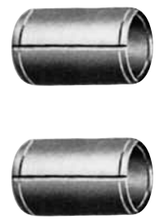

DU-Buchsen

215 .. .. mit Messing-Halbrundkopfstift und DU-Buchsen

Artikel-Nr.:	A	B1	B2	C	D	Gewerbe-teilung
	mm	mm	mm	mm	mm	
... 30 51	30	30	30	5	6	5
... 30 52	30	60	60	5	6	5
... 30 53	30	80	80	5	6	5
... 30 54	30	100	100	5	6	5
... 40 51	40	30	30	5	6	5
... 40 52	40	60	60	5	6	5
... 40 53	40	80	80	5	6	5
... 40 54	40	100	100	5	6	5
... 40 55	40	120	120	5	6	5
... 50 51	50	30	30	5	6	5
... 50 52	50	60	60	5	6	5
... 50 53	50	80	80	5	6	5
... 50 54	50	100	100	5	6	5
... 50 55	50	120	120	5	6	5
... 60 51	60	30	30	5	6	5

www.METALIKA-KACIN.com

DU-Lagerwerkstoffe Trocken-Gleitmaterial mit verzinntem Stahlrücken, wartungsfrei

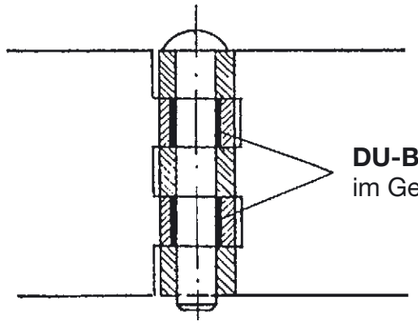

DU-Buchsen
im Gewerbe festsitzend

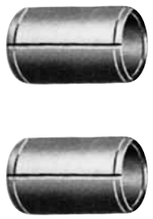

DU-Buchsen

215 .. .. mit Messing-Halbrundkopfstift und DU-Buchsen

Artikel-Nr.:	A	B1	B2	C	D	Gewerbe-teilung
	mm	mm	mm	mm	mm	
... 60 52	60	60	60	5	6	5
... 60 53	60	80	80	5	6	5
... 60 54	60	100	100	5	6	5
... 60 55	60	120	120	5	6	5
... 50 61	50	80	80	6	8	5
... 50 62	50	100	100	6	8	5
... 50 63	50	120	120	6	8	5
... 60 61	60	80	80	6	8	5
... 60 62	60	100	100	6	8	5
... 60 63	60	120	120	6	8	5
... 60 64	60	150	150	6	8	5
... 60 71	60	40	40	7	8	5
... 60 72	60	80	80	7	8	5
... 60 73	60	100	100	7	8	5
... 60 74	60	120	120	7	8	5
... 60 75	60	150	150	7	8	5

www.METALIKA-KACIN.com

Zubehörteile:

Schmierstifte, Stahl, mit Innengewinde M6 x 1.0, passend für Hydr.-Nippel M6 x 1 DIN 71412

Artikel-Nr.:	A	D
	mm	mm
861 60 01	45	8h 8
861 60 03	55	8h 8
861 60 04	65	8h 8
861 60 06	75	8h 8
861 60 07	85	8h 8
861 60 08	105	8h 8

920 12 01 Kegelschmiernippel ähnlich DIN 71412, Stahl gehärtet, galvanisch-verzinkt, H1 M6 x 1,0 mm

921 02 01 Zahnscheibe DIN 6797, I 6,4 mm

Bund-Schmierstifte, Stahl, mit Innengewinde M6 x 1.0

Artikel-Nr.:	A	D
	mm	mm
861 70 03	45	6
861 70 04	55	6
861 70 05	65	6

920 12 04 Kegelschmiernippel ähnlich DIN 71412, Stahl gehärtet, verzinkt, H1 M6 x 1,0 mm

921 02 01 Zahnscheibe DIN 6797, I 6,4 mm

www.METALIKA-KACIN.com

Typ 22 + 23 Niet- und Bolzengelenkbänder DIN 31211

Typ 22 Nietgelenkband

Typ 23 Bolzengelenkband

Zusammen-bauform I

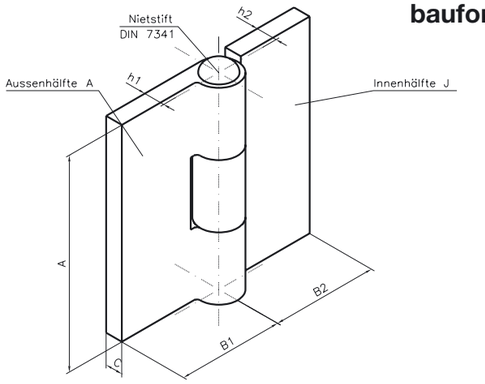

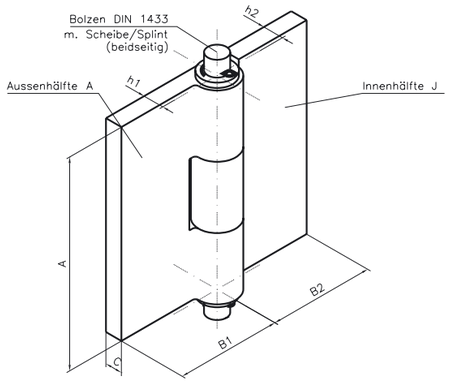

Zusammen-bauform II

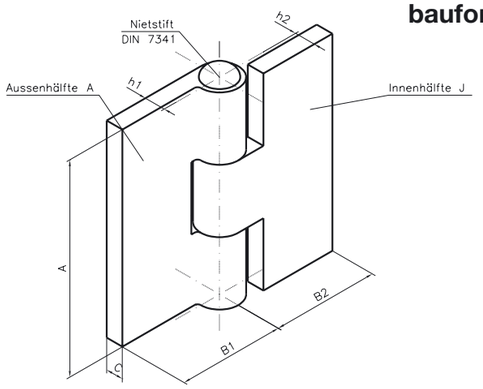

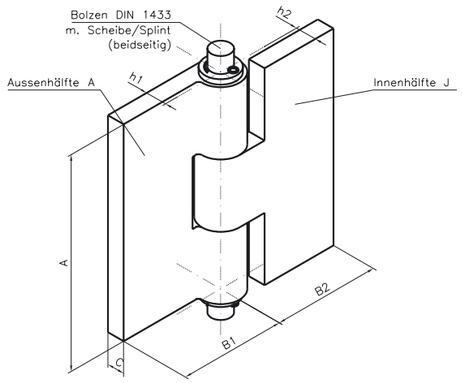

Artikel-Nr.:	Bezeichnung
22 11 ...	Nietgelenkbänder aus Stahl-roh, mit Stahl-Stift
22 12 ...	Nietgelenkbänder aus Stahl-roh, mit Messing-Stift
22 22 ...	Nietgelenkbänder aus Stahl galvanisch verzinkt, mit Messing-Stift
23 11 ...	Bolzengelenkbänder aus Stahl-roh, mit Stahl-Stift
23 12 ...	Bolzengelenkbänder aus Stahl-roh, mit Messing-Stift
23 22 ...	Bolzengelenkbänder aus Stahl galvanisch verzinkt, mit Messing-Stift

www.METALIKA-KACIN.com

Niet- und Bolzen-Gelenkbänder DIN 31211

Artikel-Nr.:		Zugehörige Teile						A	Gewicht kg = für vollständiges	
Zusammen-bauform Nr. I	Zusammen-bauform Nr. II	Gelenkband-Außenhälfte A c/h1 x b1 DIN 31212	Gelenkband-Innenhälfte J c/h2 x b2 DIN 31212	Nietstift DIN 7341 St	Bolzen DIN 1433 St 37	Scheibe DIN 433 St	Splint DIN 94 St		Niet-Gelenk-band Form I und II	Bolzen-Gelenk-band Form I und II
....001	002	3/4 x 20	3/4 x 20	A 4 h 11 x 42	4 h 11 x 50 x 43	4,3	1 x 8	40	0,046	0,047
....003	004		3/4 x 40						0,065	0,066
....005	006	3/4 x 40	3/4 x 40						0,084	0,085
....007	008	5/6 x 30	5/6 x 30	A 6 h 11 x 63	6 h 11 x 75 x 65,5	6,4	1,5 x 12	60	0,168	0,171
....009	010		5/6 x 60						0,239	0,242
....011	012		5/9 x 30						0,173	0,176
....013	014		5/9 x 60						0,238	0,241
....015	016		5/13 x 30						0,178	0,181
....017	018		5/13 x 60						0,252	0,255
....019	020	5/6 x 60	5/6 x 60						0,310	0,313
....021	022		5/9 x 30						0,244	0,247
....023	024		5/9 x 60						0,319	0,322
....025	026		5/13 x 30						0,249	0,252
....027	028		5/13 x 60						0,323	0,326
....029	030	5/9 x 30	5/9 x 30						0,178	0,181
....031	032		5/9 x 60						0,253	0,256
....033	034		5/13 x 30						0,183	0,186
....035	036		5/13 x 60						0,257	0,260
....037	038	5/9 x 60	5/9 x 60						0,328	0,331
....039	040		5/13 x 30						0,258	0,261
....041	042		5/13 x 60						0,332	0,335
....043	044	5/13 x 30	5/13 x 30						0,188	0,191
....045	046		5/13 x 60						0,262	0,265
....047	048	5/13 x 60	5/13 x 60						0,336	0,339
....049	050	7/8 x 40	7/8 x 40	A 8 h 11 x 83	8 h 11 x 95 x 86	8,4	2 x 15	80	0,415	0,423
....051	052		7/8 x 80						0,591	0,599
....053	054		7/18 x 40						0,444	0,452
....055	056		7/18 x 80						0,626	0,634
....057	058	7/8 x 80	7/8 x 80						0,767	0,775
....059	060		7/18 x 40						0,620	0,628
....061	062		7/18 x 80						0,802	0,810
....063	064	7/18 x 40	7/18 x 40						0,473	0,481
....065	066		7/18 x 80						0,655	0,663
....067	068	7/18 x 80	7/18 x 80						0,835	0,843
....069	070	10/13 x 110	10/13 x 110	A 13 h 11 x 105	x 120 x 109	13,5	4 x 22	100	1,82	1,99

Maßtabelle

A = Gewerbehöhe
B1 = Breite Doppelstück
B2 = Breite Bindestück
C = Materialdicke
h1 = halbe Rolle Doppelstück
h2 = halbe Rolle Bindestück

www.METALIKA-KACIN.com

Typ 24 + 26 Gelenkband Außen-/Innenhälfte

Nr. 24
Gelenkband-
Außenhälfte

Nr. 26
Gelenkband-
Innenhälfte

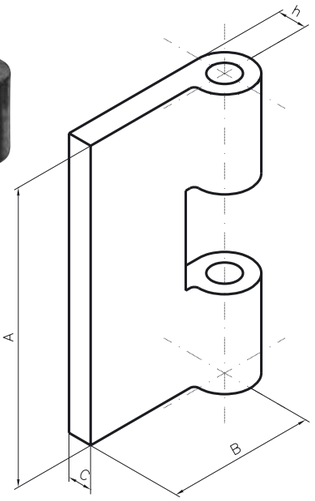

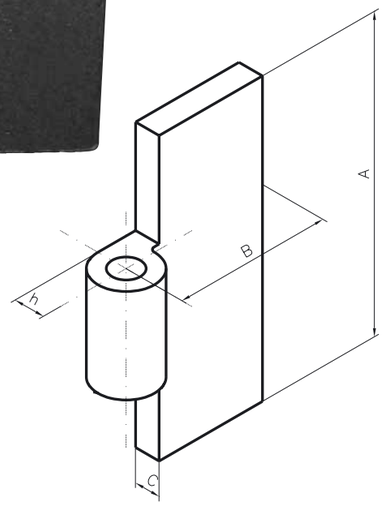

24. .. .. Außenhälfte aus Stahl-roh
25. .. .. Außenhälfte aus Stahl galvanisch-verzinkt
26. .. .. Innenhälfte aus Stahl-roh
27. .. .. Innenhälfte aus Stahl galvanisch-verzinkt

Artikel-Nr.:	A	B	C	h
	mm	mm	mm	mm
..4 03 01	40	20	3	4
..4 03 02	40	40	3	4
..6 05 11	60	30	5	6
..6 05 12	60	60	5	6
..6 05 21	60	30	5	9
..6 05 22	60	60	5	9
..6 05 31	60	30	5	13
..6 05 32	60	60	5	13
..8 07 41	80	40	7	8
..8 07 42	80	80	7	8
..8 07 51	80	40	7	18
..8 07 52	80	80	7	18
..1 01 61	100	110	10	13

www.METALIKA-KACIN.com

METALIKA
COMPONENTS FOR INDUSTRY

Typ 28 Profilscharniere spitzgeschnitten, gelocht

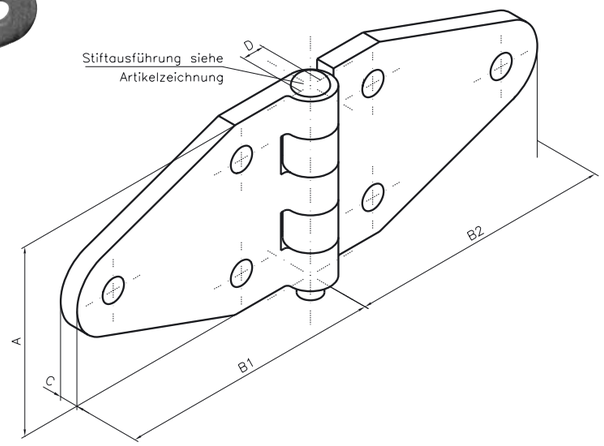

28. .. .. Stahl-roh, mit Halbrundkopfstift Stahl-roh

Artikel-Nr.:	A	B1	B2	C	D	Gewerbe-teilung
	mm	mm	mm	mm	mm	
..1 11 11	50	70	70	3	4	5
..2 11 11	50	70	70	5	6	5
..3 11 11	50	70	70	6	8	5

28. .. .. Stahl galvanisch-verzinkt, mit Halbrundkopfstift Stahl galvanisch-verzinkt

Artikel-Nr.:	A	B1	B2	C	D	Gewerbe-teilung
	mm	mm	mm	mm	mm	
..1 21 21	50	70	70	3	4	5
..2 21 21	50	70	70	5	6	5
..3 21 21	50	70	70	6	8	5

28. .. .. Stahl-roh, mit Messing-Halbrundkopfstift

Artikel-Nr.:	A	B1	B2	C	D	Gewerbe-teilung
	mm	mm	mm	mm	mm	
..1 11 31 **	50	70	70	3	4	5
..2 11 31	50	70	70	5	6	5
..3 11 31	50	70	70	6	8	5

** mit beidseits vernietetem Messing-Stift

www.METALIKA-KACIN.com

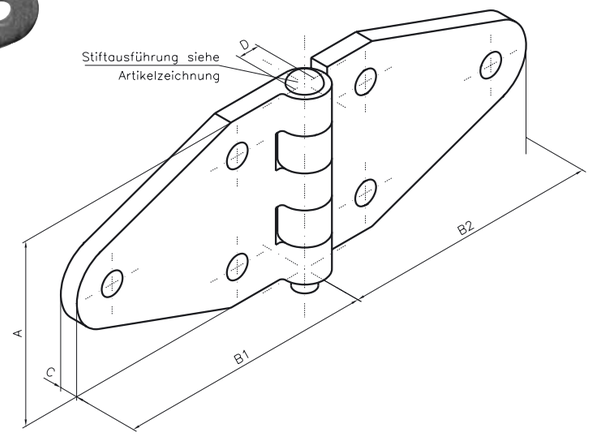

www.METALIKA-KACIN.com

28. .. .. Stahl galvanisch-verzinkt, mit Messing-Halbrundkopfstift

Artikel-Nr.:	A	B1	B2	C	D	Gewerbe-teilung
	mm	mm	mm	mm	mm	
..1 21 31 **	50	70	70	3	4	5
..2 21 31	50	70	70	5	6	5
..3 21 31	50	70	70	6	8	5

** mit beidseits vernietetem Messing-Stift

28. .. .. Stahl-roh, mit Schmierstift

Artikel-Nr.:	A	B1	B2	C	D	Gewerbe-teilung
	mm	mm	mm	mm	mm	
..2 12 11	50	70	70	5	6	5
..3 13 11	50	70	70	6	8	5

28. .. .. Stahl galvanisch-verzinkt, mit Schmierstift

Artikel-Nr.:	A	B1	B2	C	D	Gewerbe-teilung
	mm	mm	mm	mm	mm	
..2 22 21	50	70	70	5	6	5
..3 23 21	50	70	70	6	8	5

Valjani tečaji za vozila in prikolice
Rolled hinges for vehicle trailer construction

www.METALIKA-KACIN.com

Produktgruppe 2

gerollte Scharniere
für den Fahrzeug- und Anhängerbau

Typ 163 verdeckt gerollte Scharniere aus Stahl galvanisch-verzinkt mit VDA-Schmierstift, Schmiernippel und Scheibe, ungelocht (gelocht auf Anfrage)

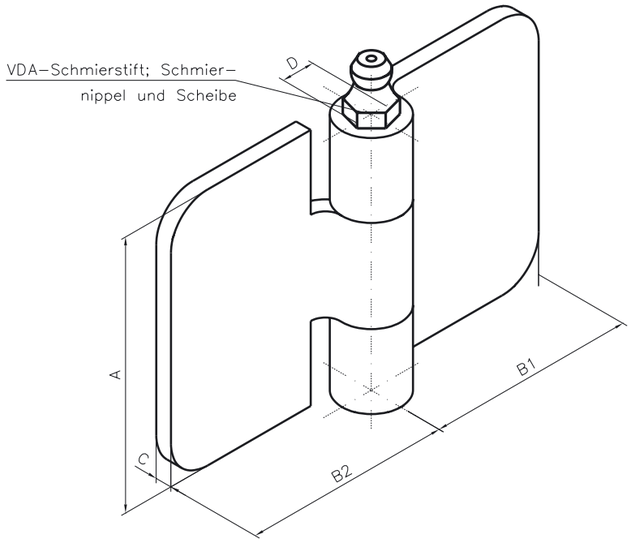

Artikel-Nr.:	A	B1	B2	C	D	Gewerbe-teilung
	mm	mm	mm	mm	mm	
163 31 01	65	50	50	4	8	3

www.METALIKA-KACIN.com

METALIKA
COMPONENTS FOR INDUSTRY

Typ 164 verdeckt gerollte Scharniere aus Nirosta WS 1.4301 mit beidseits vernietetem Nirosta-Stift, ungelocht (gelocht auf Anfrage)

EDELSTAHL Rostfrei

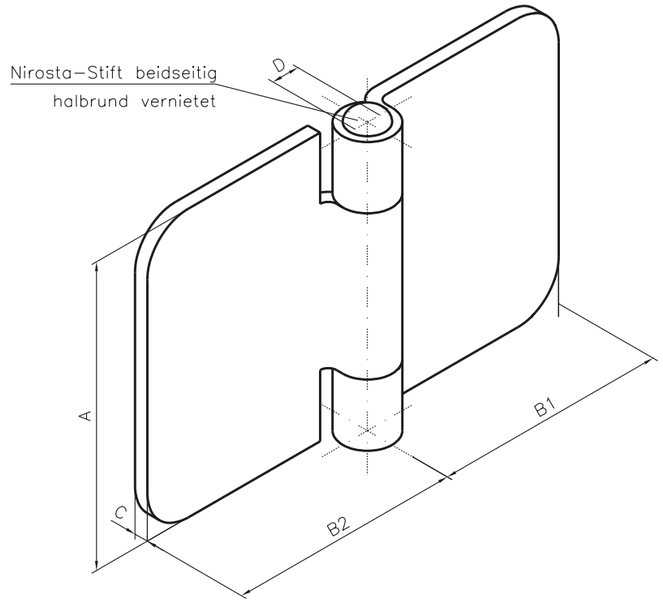

Artikel-Nr.:	A	B1	B2	C	D	Gewerbe-teilung
	mm	mm	mm	mm	mm	
164 53 01	65	50	50	3	6	3

www.METALIKA-KACIN.com

Typ 165 verdeckt gerollte Scharniere aus Stahl galvanisch-verzinkt mit Schmierstift, Schmiernippel und Scheibe, gelocht

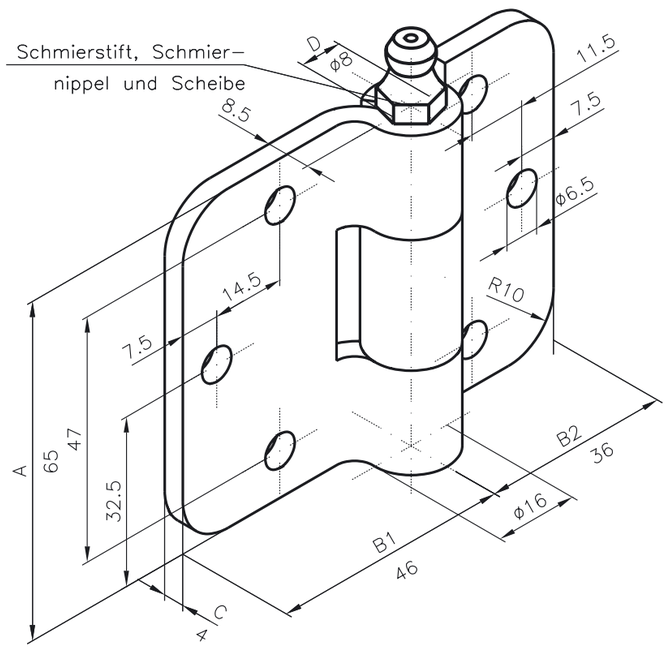

Artikel-Nr.:	A	B1	B2	C	D	Niet-löcher	Loch-durchmesser	Gewerbe-teilung
	mm	mm	mm	mm	mm	Anzahl	mm	
165 31 01	65	46	36	4	8	6	6,5	3

www.METALIKA-KACIN.com

METALIKA
COMPONENTS FOR INDUSTRY

Typ 165 verdeckt gerollte Scharniere aus Nirosta WS 1.4301 mit beidseits vernietetem Nirosta-Stift, gelocht

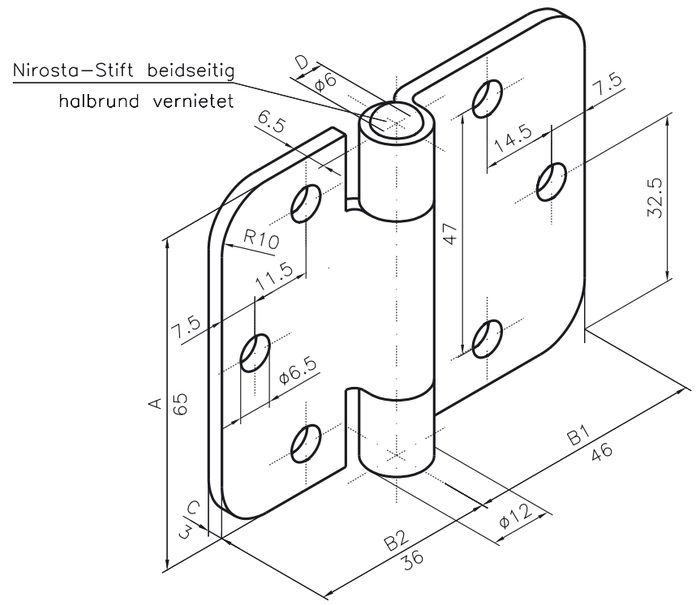

Artikel-Nr.:	A	B1	B2	C	D	Niet-löcher	Loch-durchmesser	Gewerbe-teilung
	mm	mm	mm	mm	mm	Anzahl	mm	
165 53 01	65	46	36	3	6	6	6,5	3

www.METALIKA-KACIN.com

Typ 419 gerollte Scharniere aus Nirosta WS 1.4301, Oberfläche kugelpoliert, gelocht, lieferbar in drei Varianten (siehe Foto)

419 13 54

419 13 55

419 14 98

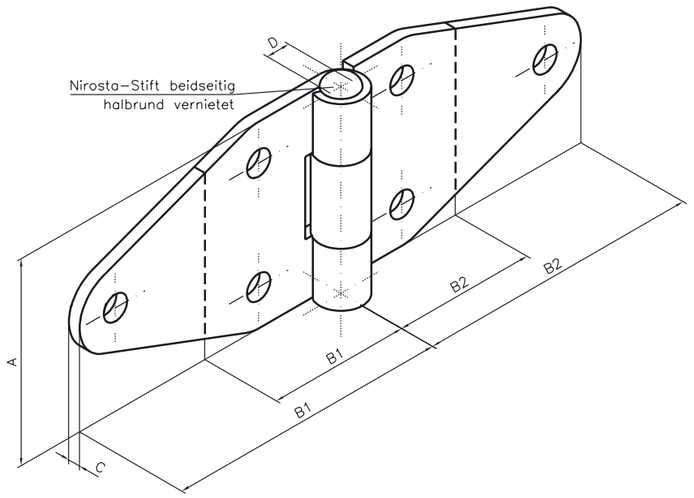

Artikel-Nr.:	A	B1	B2	C	D	Niet-löcher	Loch-durchmesser	Gewerbe-teilung
	mm	mm	mm	mm	mm	Anzahl	mm	
419 13 54	50	70	70	3	6	6	6,5	3
419 13 55	50	35	35	3	6	4	6,5	3
419 14 98	50	70	35	3	6	5	6,5	3

Typ 170 verdeckt gerollte Scharniere aus Stahl galvanisch-verzinkt mit VDA-Schmierstift und Rändel, Schmiernippel und Scheibe, gelocht

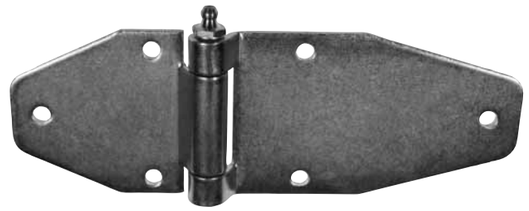

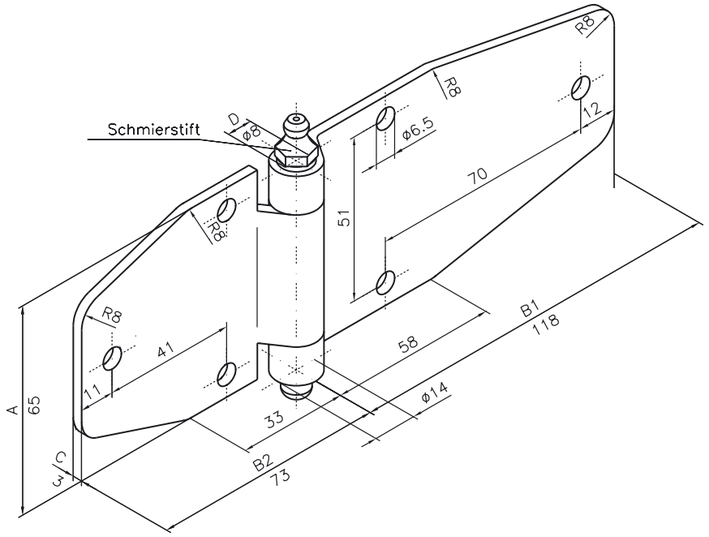

Artikel-Nr.:	A	B1	B2	C	D	Niet-löcher	Loch-durchmesser	Gewerbe-teilung
	mm	mm	mm	mm	mm	Anzahl	mm	
170 41 01	65	118	73	3	8	6	6,5	3

www.METALIKA-KACIN.com
www.METALIKA-KACIN.com

Typ 170 verdeckt gerollte Scharniere komplett aus Nirosta WS 1.4301, Oberfläche geschliffen, mit Schmierstift und Ringnut, Sprengring, Schmiernippel und Scheibe, gelocht

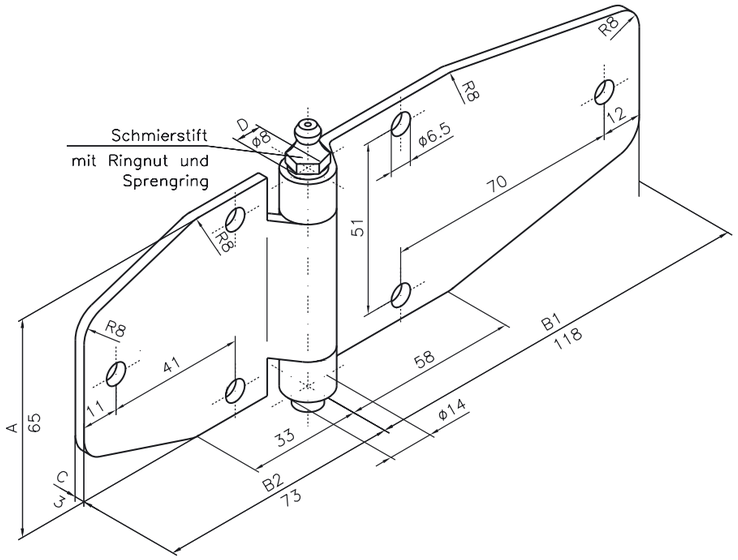

Artikel-Nr.:	A	B1	B2	C	D	Niet-löcher	Loch-durchmesser	Gewerbe-teilung
	mm	mm	mm	mm	mm	Anzahl	mm	
170 63 01	65	118	73	3	8	6	6,5	3

FinAlu® continuous hinge

270° ALU RoHS

Continuous hinges in aluminium profile with a small pin diameter.
This nice design can be used in many applications (medical, electronic enclosures, food equipment, transportation...).
These hinges have the same dimensions as hinges used in the aircraft industry.

Part number	Material	Finish	A	B	C	D	E	Pin material	Note	Weight (g)
72-1-4243	6082 T5 alu	anodised	915	31.75	1.3	2.2	12.7	stainless steel	undrilled	150
72-1-4244	6082 T5 alu	raw	1830	31.75	1.3	2.2	12.7	stainless steel	undrilled	300
72-1-4245	6082 T5 alu	anodised	915	44.45	1.3	2.2	12.7	stainless steel	undrilled	190
72-1-4246	6082 T5 alu	raw	1830	44.45	1.3	2.2	12.7	stainless steel	undrilled	380
72-1-4247	6082 T5 alu	anodised	915	63.5	1.3	2.2	12.7	stainless steel	undrilled	250
72-1-4248	6082 T5 alu	raw	1830	63.5	1.3	2.2	12.7	stainless steel	undrilled	500

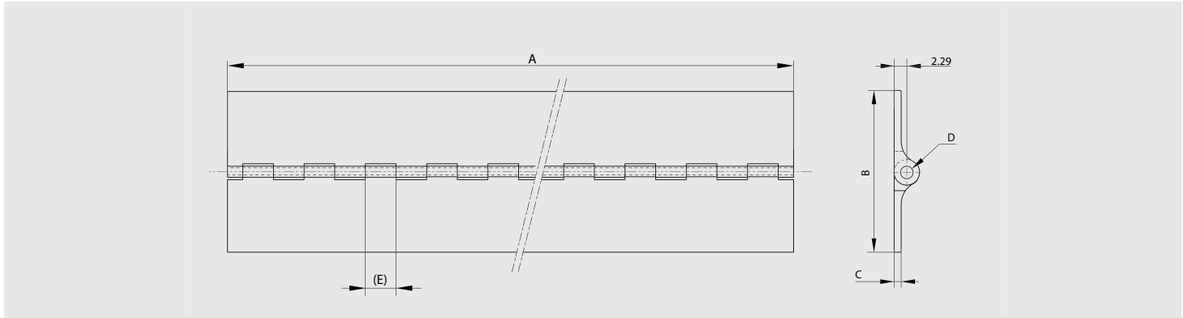

Aluminium profile continuous hinge - 50 mm

270° ALU RoHS

Opening angle 270°. Other lengths are available on request.
Specific drilling requirements are also available on request.

Part number	Material	Finish	A	B	C	D	E	Pin material	Note	Weight (g)
72-1-3316	6060 T5 alu	raw	2000	50	3	5.2	35.5	304 stainless steel	undrilled	1200

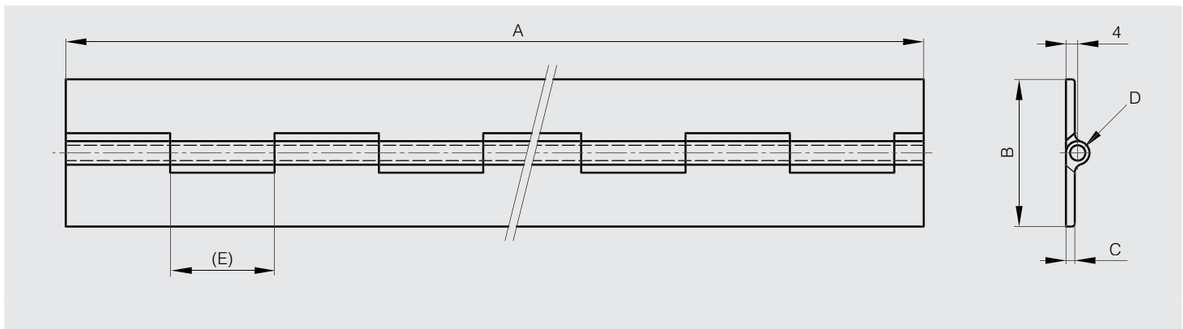

www.METALIKA-KACIN.com

Rolled knuckle continuous hinge - 15 mm width

270° STEEL RoHS

Opening angle 270°. Other lengths and pin materials are available on request.
Specific drilling requirements are also available on request.

Part number	Material	Finish	A	B	C	D	E	Pin material	Note	Weight (g)
40-1-3327	steel	raw	2040	15	0.7	1.5	15	steel	undrilled	260

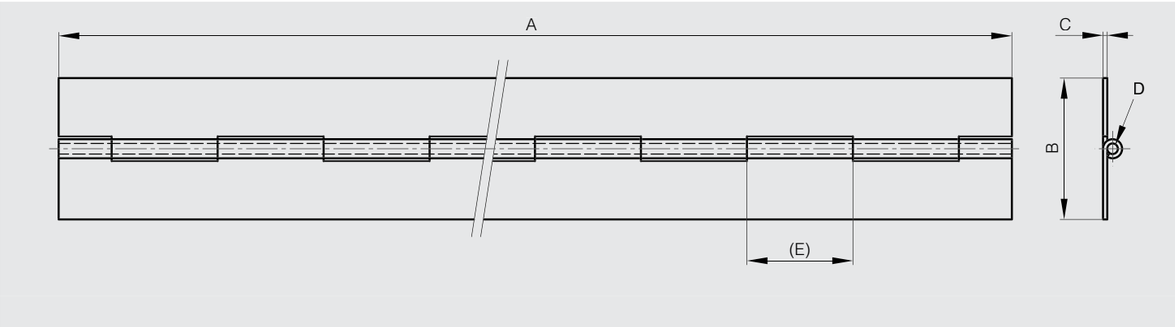

Rolled knuckle continuous hinge - 20 mm width

270° ALU STAINLESS STEEL STEEL RoHS

Opening angle 270°. Other lengths and pin materials are available on request.
Specific drilling requirements are also available on request.

Part number	Material	Finish	A	B	C	D	E	F	G	S	Pin material	Note	Weight (g)
40-1-3328	steel	raw	2040	20	0.8	2	15				steel	undrilled	320
40-1-3321	steel	raw	2040	20	0.8	2	15	11.5	60	2.8	steel	drilled	310
41-1-3529	5754 alu	raw	2000	20	0.6	2.4	15				steel	undrilled	117
42-1-3664	304 stainless steel	raw	2040	20	0.8	2	15				stainless steel	undrilled	320
42-1-4195	304 stainless steel	raw	2040	20	0.8	2	15	11.5	60	2.8	stainless steel	drilled	310

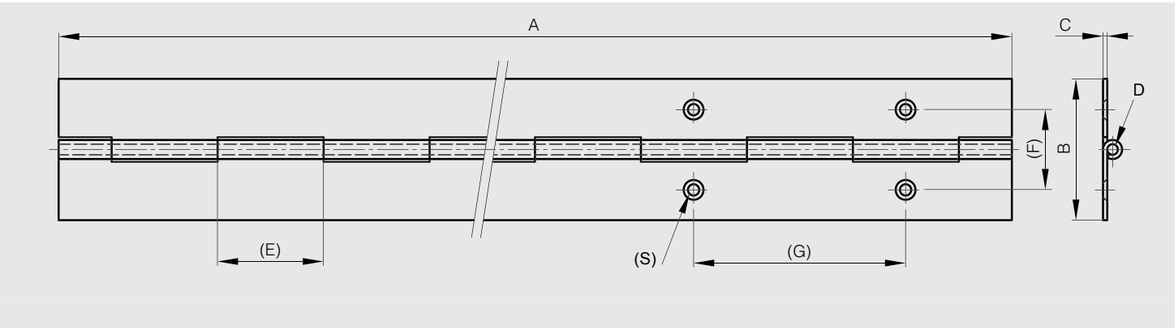

Rolled knuckle continuous hinge - 25 mm width

NEW

270° ALU STAINLESS STEEL STEEL RoHS

Opening angle 270°. Other lengths and pin materials are available on request.
Specific drilling requirements are also available on request.
Hinge in raw galvanised steel is made of pregalvanised steel. Therefore any cut surface is ungalvanised.

	Part number	Material	Finish	A	B	C	D	E	F	G	S	Pin material	Note	Weight (g)
	40-1-3329	steel	raw	2040	25	0.8	2	15				steel	undrilled	440
	40-1-3322	steel	raw	2040	25	0.8	2	15	14	60	2.8	steel	drilled	420
	40-1-4677	galvanised steel	raw	1800	25	1.2	3	30				brass	undrilled	500
NEW	41-1-3559	5754 alu	raw	1000	25	0.8	2	15				steel	undrilled	88
NEW	42-1-3910	304 stainless steel	raw	1020	25	0.8	2	15				stainless steel	undrilled	224
	42-1-3767	304 stainless steel	raw	2040	25	0.8	2	15				stainless steel	undrilled	448
	42-1-4196	304 stainless steel	raw	2040	25	0.8	2	15	14	60	3.6	stainless steel	drilled	420
	42-1-4096	304 stainless steel	raw	1800	25	1	2	15				stainless steel	undrilled	500
	42-1-3949	304 stainless steel	raw	2040	25	1	2	15				stainless steel	undrilled	558
NEW	42-1-4546	316L stainless steel	raw	1980	25	0.8	2	15				stainless steel	undrilled	385

Rolled knuckle continuous hinge - 30 mm width

NEW

270° ALU STAINLESS STEEL STEEL RoHS

Opening angle 270°. Other lengths and pin materials are available on request.
Specific drilling requirements are also available on request.

	Part number	Material	Finish	A	B	C	D	E	F	G	S	Pin material	Note	Weight (g)
	40-1-3330	steel	raw	2040	30	0.8	2	15				steel	undrilled	510
	40-1-3323	steel	raw	2040	30	0.8	2	15	16.8	60	3.9	steel	drilled	460
	40-1-3679	steel	raw	2040	30	1	2	15				steel	undrilled	640
	40-1-3680	steel	raw	2040	30	1	2	15	16.8	60	3.9	steel	drilled	640
	40-1-4370	steel	raw	2000	30	2	6	30				steel	undrilled	1800
NEW	41-1-3560	5754 alu	raw	1980	30	1	2	15				aluminium	undrilled	205
NEW	42-1-3909	304 stainless steel	raw	1020	30	0.8	2	15				stainless steel	undrilled	255
	42-1-3580	304 stainless steel	raw	2040	30	0.8	2	15				stainless steel	undrilled	510
	42-1-4089	304 stainless steel	raw	1800	30	1	2	15				stainless steel	undrilled	500
	42-1-3300	304 stainless steel	raw	2040	30	1	2	15				stainless steel	undrilled	670
	42-1-4197	304 stainless steel	raw	2040	30	1	2	15	16.8	60	3.9	stainless steel	drilled	640
	42-1-3950	304 stainless steel	raw	1995	30	1.5	4	30				stainless steel	undrilled	1283
	42-1-3948	304 stainless steel	raw	1995	30	2	6	25				stainless steel	undrilled	1800
NEW	42-1-4082	316L stainless steel	raw	1020	30	1	2	15				stainless steel	undrilled	335
	42-1-4000	316L stainless steel	raw	2040	30	1	2	15				stainless steel	undrilled	670

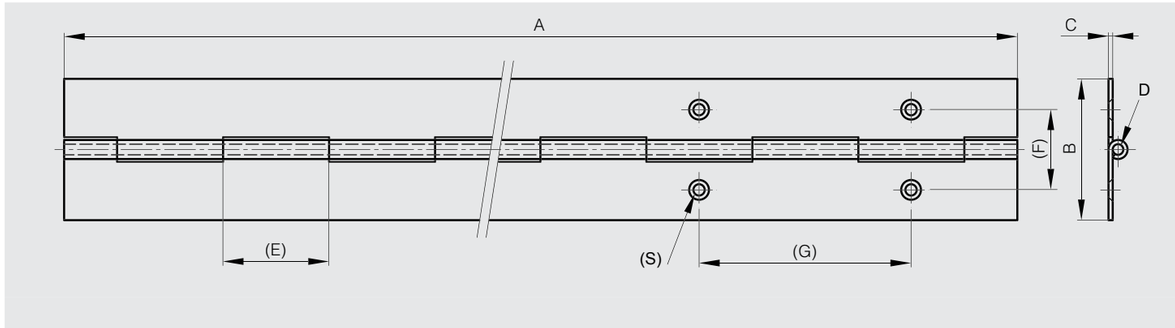

www.METALIKA-KACIN.com

Rolled knuckle continuous hinge - 32 mm width

270° STAINLESS STEEL STEEL RoHS

Opening angle 270°. Other lengths and pin materials are available on request.
Specific drilling requirements are also available on request.

Part number	Material	Finish	A	B	C	D	E	Pin material	Note	Weight (g)
40-1-4771	steel	raw	1950	32	1.5	3	12.5	steel	undrilled	1030
42-1-4346	304 stainless steel	raw	1800	32	1.2	3	30	stainless steel	undrilled	790
42-1-4460	304 stainless steel	raw	1950	32	1.5	3	12.5	stainless steel	undrilled	1030

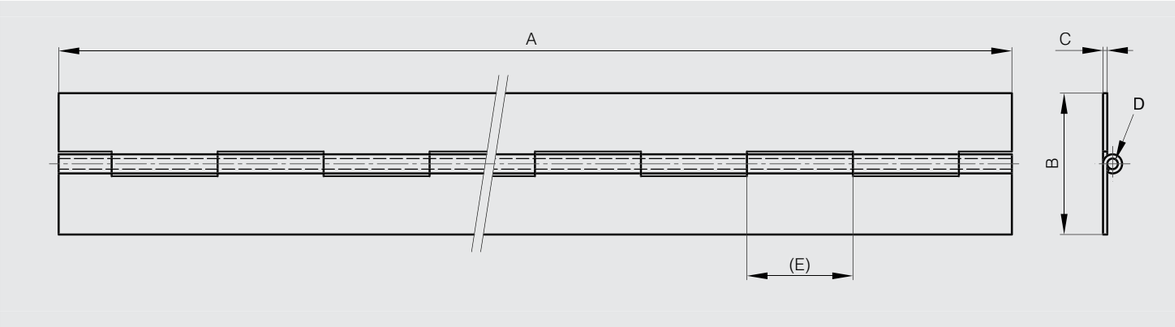

Rolled knuckle continuous hinge - 35 mm width

270° ALU STEEL RoHS

Opening angle 270°. Other lengths and pin materials are available on request.
Specific drilling requirements are also available on request.

Part number	Material	Finish	A	B	C	D	E	F	G	S	Pin material	Note	Weight (g)
40-1-3332	steel	raw	2040	35	1	2	15				steel	undrilled	700
40-1-3324	steel	raw	2040	35	1	2	15	19.5	60	4.5	steel	drilled	680
41-1-3532	5754 alu	raw	1995	35	1	3	30				aluminium	undrilled	232

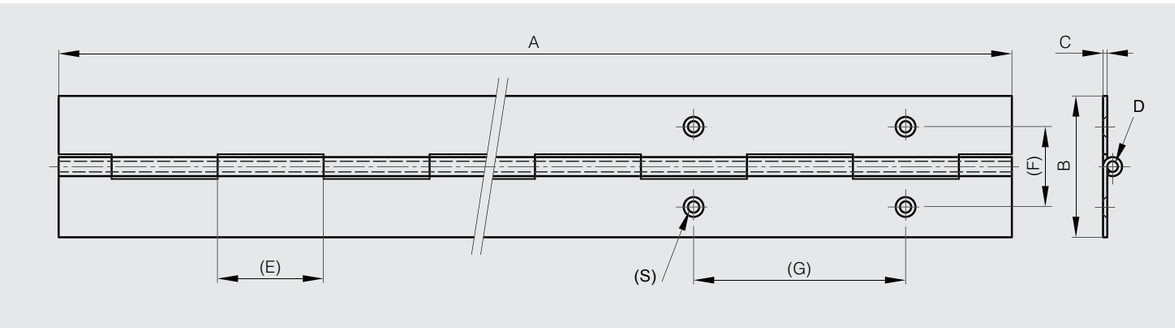

Rolled knuckle continuous hinge - 40 mm width

NEW

270° ALU STAINLESS STEEL STEEL RoHS

Opening angle 270°. Other lengths and pin materials are available on request.
Specific drilling requirements are also available on request.
Hinge in raw galvanised steel is made of pregalvanised steel. Therefore any cut surface is ungalvanised.

	Part number	Material	Finish	A	B	C	D	E	F	G	S	Pin material	Note	Weight (g)
	40-1-3703	steel	raw	2040	40	0.8	2	15				steel	undrilled	650
	40-1-3681	steel	raw	2040	40	1.2	3	30				steel	undrilled	1000
	40-1-3682	steel	raw	2040	40	1.2	3	30	22.7	60	4.2	steel	drilled	1000
	40-1-4772	steel	raw	1950	40	1.5	3	12.5				steel	undrilled	1230
	40-1-3683	steel	raw	2040	40	1.5	4	15				steel	undrilled	1400
	40-1-4691	galvanised steel	raw	1800	40	1.2	3	30				brass	undrilled	1520
NEW	41-1-3540	5754 alu	raw	1000	40	1.2	3	30				aluminium	undrilled	178
	41-1-3520	5754 alu	raw	2040	40	1.2	3	30				aluminium	undrilled	356
	41-1-3521	5754 alu	raw	2000	40	1.5	4	15				aluminium	undrilled	500
NEW	42-1-4257	304 stainless steel	raw	1020	40	1.2	3	30				stainless steel	undrilled	500
	42-1-4347	304 stainless steel	raw	1800	40	1.2	3	30				stainless steel	undrilled	940
	42-1-4350	304 stainless steel	raw	2040	40	1.2	3	30				stainless steel	undrilled	1000
	42-1-4349	304 stainless steel	raw	2040	40	1.2	3	30	22.7	60	4.2	stainless steel	drilled	1000
	42-1-4461	304 stainless steel	raw	1950	40	1.5	3	12.5				stainless steel	undrilled	1230
	42-1-3301	304 stainless steel	raw	2040	40	1.5	4	15				stainless steel	undrilled	1400
	42-1-4199	304 stainless steel	raw	2040	40	1.5	4	15	22.7	60	4	stainless steel	drilled	1400
	42-1-3770	304 stainless steel	raw	2040	44	2	6	30				stainless steel	undrilled	2463
NEW	42-1-4083	316L stainless steel	raw	1020	40	1.5	4	15				stainless steel	undrilled	700
	42-1-4001	316L stainless steel	raw	2040	40	1.5	4	15				stainless steel	undrilled	1400
	42-1-3665	430 stainless steel	raw	2040	40	0.8	2	15				stainless steel	undrilled	650

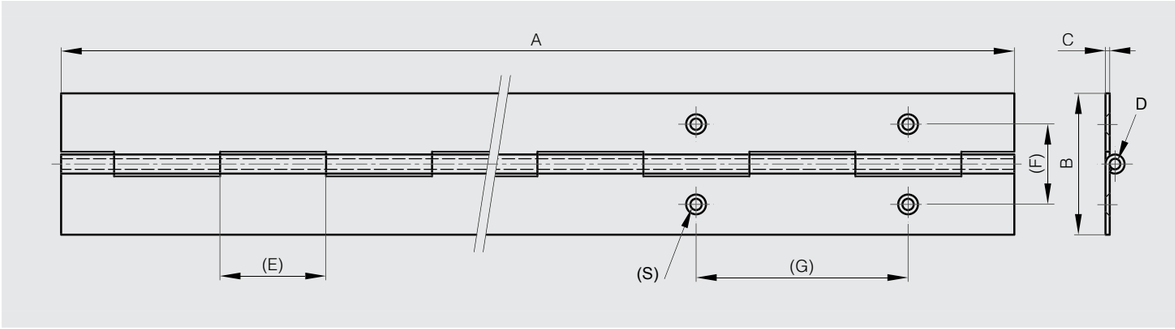

www.METALIKA-KACIN.com

Rolled knuckle continuous hinge - 50 mm width

NEW

270° ALU STAINLESS STEEL STEEL RoHS

Opening angle 270°. Other lengths and pin materials are available on request.
Specific drilling requirements are also available on request.
Hinge in raw galvanised steel is made of pregalvanised steel. Therefore any cut surface is ungalvanised.

	Part number	Material	Finish	A	B	C	D	E	F	G	S	Pin material	Note	Weight (g)
	40-1-3704	steel	raw	2040	50	1.2	3	30				steel	undrilled	1300
	40-1-3758	steel	raw	2040	50	1.2	3	30	28	60	4	steel	drilled	1270
	40-1-4773	steel	raw	1950	50	1.5	3	12.5				steel	undrilled	1450
	40-1-4355	steel	raw	2040	50	2	6	30				steel	undrilled	2486
	40-1-4679	galvanised steel	raw	1800	50	1.2	3	30				brass	undrilled	1800
	41-1-3531	5754 alu	raw	2040	50	1.2	3	30				aluminium	undrilled	459
NEW	41-1-3541	5754 alu	raw	1000	50	1.5	4	15				aluminium	undrilled	306
	41-1-3522	5754 alu	raw	2000	50	1.5	4	15				aluminium	undrilled	612
NEW	42-1-4258	304 stainless steel	raw	1020	50	1.2	3	30				stainless steel	undrilled	650
	42-1-4348	304 stainless steel	raw	1800	50	1.2	3	30				stainless steel	undrilled	1100
	42-1-4353	304 stainless steel	raw	2040	50	1.2	3	30				stainless steel	undrilled	1300
	42-1-4352	304 stainless steel	raw	2040	50	1.2	3	30	28	60	4	stainless steel	drilled	1270
	42-1-4462	304 stainless steel	raw	1950	50	1.5	3	12.5				stainless steel	undrilled	1450
	42-1-4219	304 stainless steel	raw	1800	50	1.5	4	15				stainless steel	undrilled	1500
	42-1-3918	304 stainless steel	raw	2000	50	2	4	25				stainless steel	undrilled	2350
NEW	42-1-4259	316L stainless steel	raw	1020	50	1.2	3	20				stainless steel	undrilled	655
	42-1-4354	316L stainless steel	raw	2040	50	1.2	3	30				stainless steel	undrilled	1310

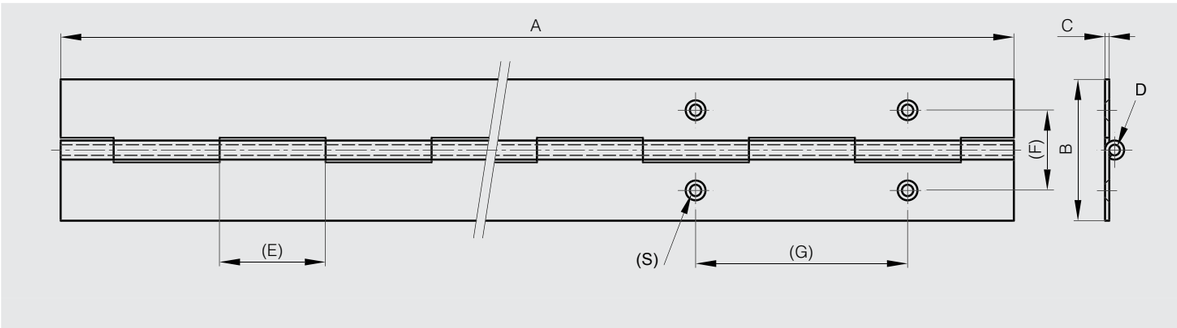

www.METALIKA-KACIN.com

Rolled knuckle continuous hinge - 57 mm width

270° STAINLESS STEEL STEEL RoHS

Opening angle 270°. Other lengths and pin materials are available on request.
Specific drilling requirements are also available on request.
Hinge in raw galvanised steel is made of pregalvanised steel. Therefore any cut surface is ungalvanised.

Part number	Material	Finish	A	B	C	D	E	Pin material	Note	Weight (g)
40-1-4680	galvanised steel	raw	2160	57	1.5	4	15	brass	undrilled	2000
40-1-4682	galvanised steel	raw	2160	57	2	6	30	brass	undrilled	2970
42-1-4220	304 stainless steel	raw	2160	57	1.5	4	15	stainless steel	undrilled	2000

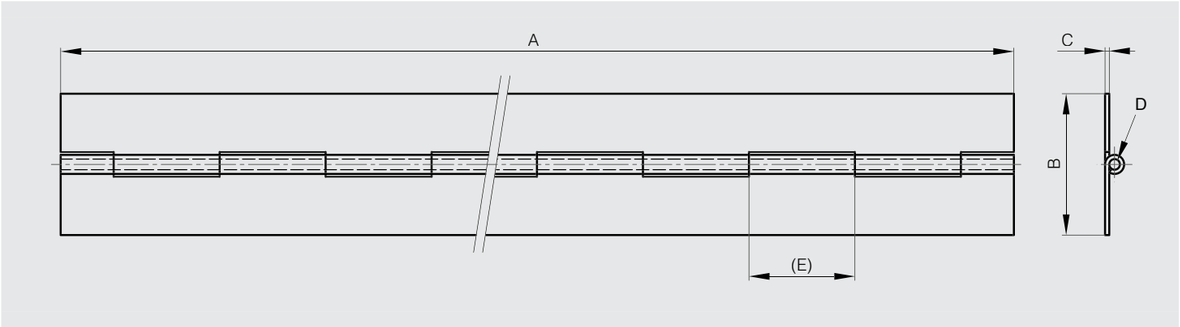

Rolled knuckle continuous hinge - 60 mm width

NEW

270° ALU STAINLESS STEEL STEEL RoHS

Opening angle 270°. Other lengths and pin materials are available on request.
Specific drilling requirements are also available on request.

	Part number	Material	Finish	A	B	C	D	E	F	G	S	Pin material	Note	Weight (g)
	40-1-3541	steel	raw	1995	60	1.5	5	40				steel	undrilled	1980
	40-1-3335	steel	raw	2000	60	1.5	8	40				steel	undrilled	2600
	40-1-4371	steel	raw	2040	60	2	6	30				steel	undrilled	2800
	41-1-3523	5754 alu	raw	1995	60	2	6	30				aluminium	undrilled	998
NEW	42-1-4086	304 stainless steel	raw	1020	60	2	6	30				stainless steel	undrilled	1400
	42-1-3302	304 stainless steel	raw	2040	60	2	6	30				stainless steel	undrilled	2800
	42-1-4201	304 stainless steel	raw	2040	60	2	6	30	35	60	4	stainless steel	drilled	2800
NEW	42-1-4085	316L stainless steel	raw	1020	60	2	6	30				stainless steel	undrilled	1400
	42-1-4002	316L stainless steel	raw	2040	60	2	6	30				stainless steel	undrilled	2800

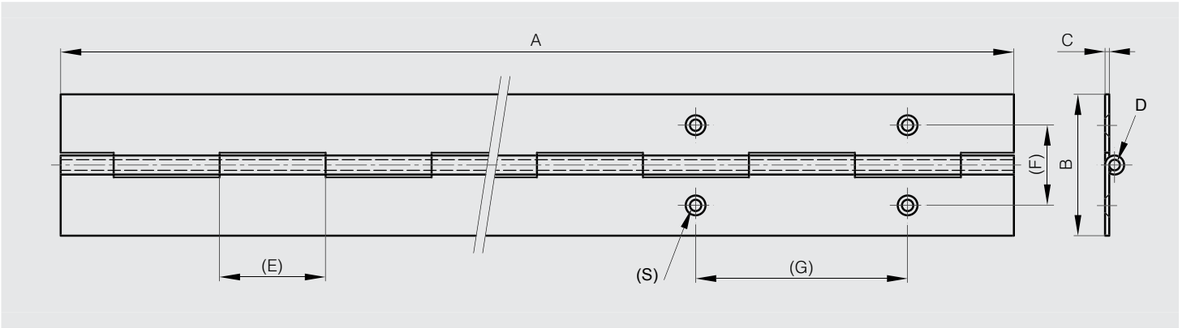

www.METALIKA-KACIN.com

Rolled knuckle continuous hinge - 63 mm width

270° STAINLESS STEEL RoHS

Opening angle 270°. Other lengths and pin materials are available on request.
Specific drilling requirements are also available on request.

Part number	Material	Finish	A	B	C	D	E	Pin material	Note	Weight (g)
42-1-4221	304 stainless steel	raw	1800	63	1.5	4	15	stainless steel	undrilled	1800

Rolled knuckle continuous hinge - 70 mm width

270° STAINLESS STEEL STEEL RoHS

Opening angle 270°. Other lengths and pin materials are available on request.
Specific drilling requirements are also available on request.

Part number	Material	Finish	A	B	C	D	E	Pin material	Note	Weight (g)
40-1-4372	steel	raw	2040	70	2	6	30	steel	undrilled	3114
42-1-4097	304 stainless steel	raw	1800	70	1.5	4	15	stainless steel	undrilled	1900
42-1-3859	304 stainless steel	raw	2040	70	2	6	30	stainless steel	undrilled	3120

Rolled knuckle continuous hinge - 76 mm width

270° STAINLESS STEEL STEEL RoHS

Opening angle 270°. Other lengths and pin materials are available on request.
Specific drilling requirements are also available on request.
Hinge in raw galvanised steel is made of pregalvanised steel. Therefore any cut surface is ungalvanised.

Part number	Material	Finish	A	B	C	D	E	Pin material	Note	Weight (g)
40-1-4681	galvanised steel	raw	2160	76	1.5	4	15	brass	undrilled	2400
42-1-4094	304 stainless steel	raw	2160	76	1.5	4	15	stainless steel	undrilled	2400

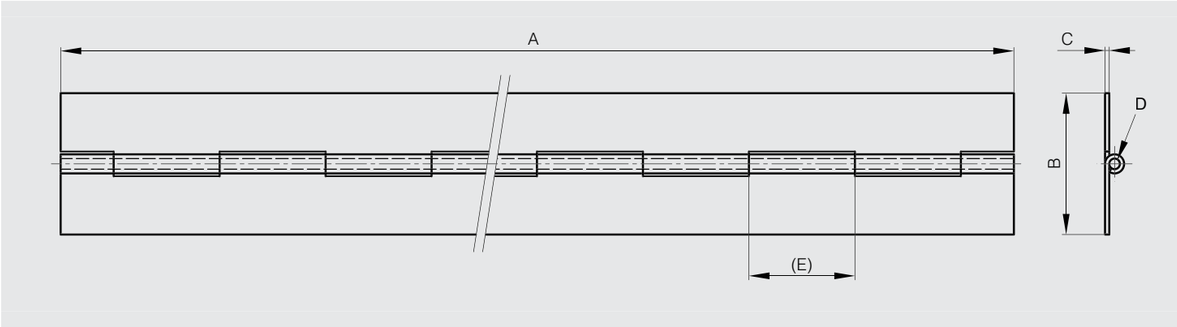

Rolled knuckle continuous hinge - 80 mm width

NEW

270° ALU STAINLESS STEEL STEEL RoHS

Opening angle 270°. Other lengths and pin materials are available on request.
Specific drilling requirements are also available on request.

	Part number	Material	Finish	A	B	C	D	E	F	G	S	Pin material	Note	Weight (g)
	40-1-4774	steel	raw	1950	80	1.5	3	12.5				steel	undrilled	2170
	40-1-3542	steel	raw	2000	80	2	7.6	40				steel	undrilled	3900
	40-1-4369	steel	raw	2000	80	3	6	40				steel	undrilled	5060
	41-1-3558	5754 alu	raw	1995	80	3	6	40				aluminium	undrilled	1780
	42-1-4463	304 stainless steel	raw	1950	80	1.5	3	12.5				stainless steel	undrilled	2170
	42-1-3304	304 stainless steel	raw	1000	80	3	6	40				stainless steel	undrilled	2530
	42-1-3569	304 stainless steel	raw	2000	80	3	6	40				stainless steel	undrilled	5060
NEW	42-1-4547	304 stainless steel	raw	2000	80	3	6	40	35	60	5.2	stainless steel	drilled	5000
NEW	42-1-4548	316L stainless steel	raw	1980	80	2	6	30				stainless steel	undrilled	3470

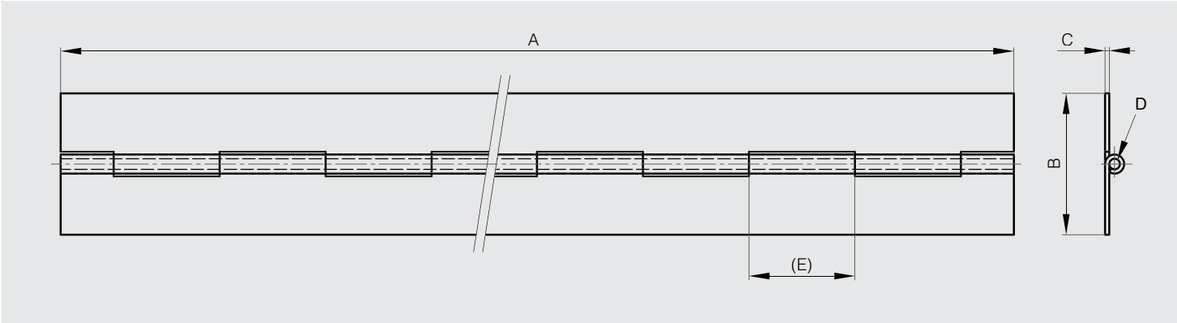

Rolled knuckle continuous hinge - 100 mm width

NEW

270° ALU STAINLESS STEEL STEEL RoHS

Opening angle 270°. Other lengths and pin materials are available on request.
Specific drilling requirements are also available on request.

	Part number	Material	Finish	A	B	C	D	E	Pin material	Note	Weight (g)
	40-1-3543	steel	raw	2000	100	3	10	40	steel	undrilled	7100
	40-1-4769	steel	raw	1000	100	4	10	40	steel	undrilled	4690
NEW	41-1-3561	5754 alu	raw	1000	100	4	10	40	steel	undrilled	2030
	42-1-4459	304 stainless steel	raw	2000	100	3	6	40	stainless steel	undrilled	5930
	42-1-4458	304 stainless steel	raw	1995	100	3	10	40	stainless steel	undrilled	7110

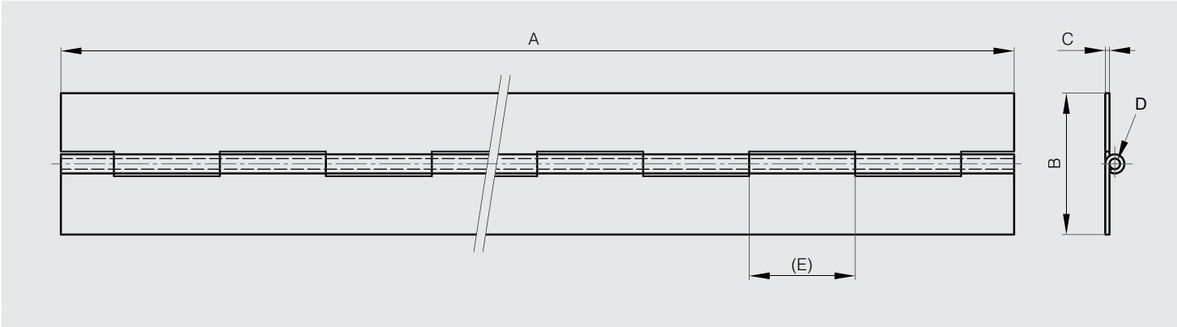

www.METALIKA-KACIN.com

Rolled knuckle continuous hinge - 120 mm width

270° STAINLESS STEEL STEEL RoHS

Opening angle 270°. Other lengths and pin materials are available on request.
Specific drilling requirements are also available on request.

Part number	Material	Finish	A	B	C	D	E	Pin material	Note	Weight (g)
40-1-4770	steel	raw	1000	120	5	10	40	steel	undrilled	6550
42-1-4095	304 stainless steel	raw	2100	120	2	6	30	stainless steel	undrilled	5000

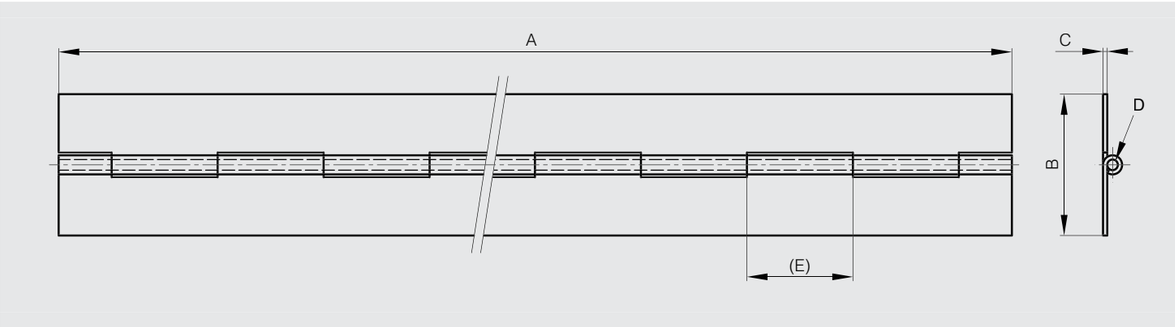

Rolled knuckle continuous hinge - 127 mm width

270° STEEL RoHS

Opening angle 270°. Other lengths and pin materials are available on request.
Specific drilling requirements are also available on request.
Hinge in raw galvanised steel is made of pregalvanised steel. Therefore any cut surface is ungalvanised.

Part number	Material	Finish	A	B	C	D	E	Pin material	Note	Weight (g)
40-1-4685	galvanised steel	raw	2160	127	3	6	40	brass	undrilled	8000

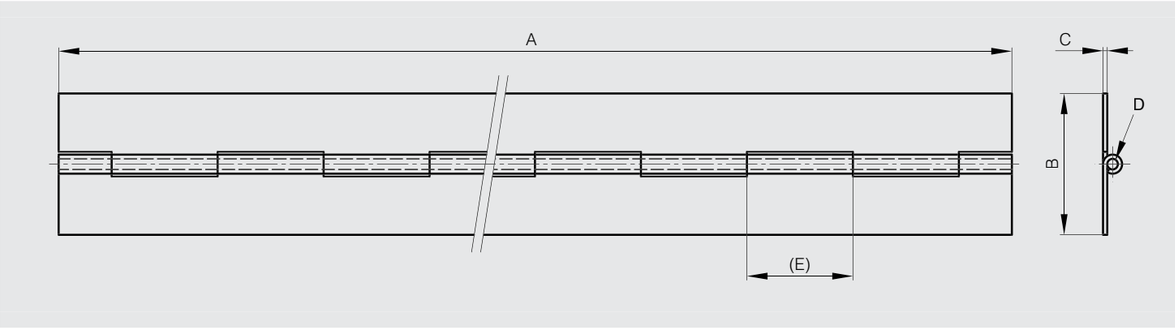

Drilled continuous hinge with one cranked leaf

270° STAINLESS STEEL STEEL RoHS

Opening angle 270°. Other lengths and pin materials are available on request.
Specific drilling requirements are also available on request.

Part number	Material	Finish	A	B	C	D	E	F	G	H	S	Pin material	Note	Weight (g)
39-1-3302	steel	zinc plated	1000	31.5	1	2	30	7.5	60	20	3.5	304 stainless steel	drilled	430
39-1-3631	steel	zinc plated	2000	31.5	1	2	30	7.5	60	20	3.5	304 stainless steel	drilled	860
39-1-3630	304 stainless steel	raw	1995	31.5	1	2	30	7.5	60	20	3.5	304 stainless steel	drilled	860

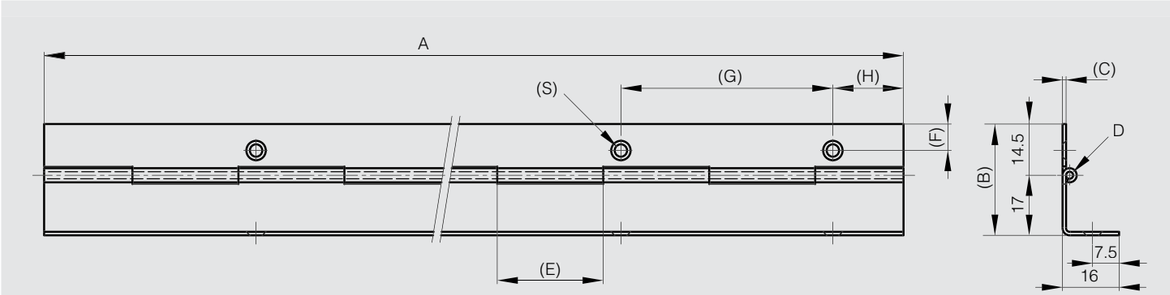

Undrilled continuous hinge with one cranked leaf

270° STAINLESS STEEL STEEL RoHS

Opening angle 270°. Other lengths and pin materials are available on request.
Specific drilling requirements are also available on request.

Part number	Material	Finish	A	B	C	D	E	Pin material	Note	Weight (g)
39-1-3632	steel	zinc plated	1995	44	1.5	3	25	304 stainless steel	undrilled	1756
39-1-3633	304 stainless steel	raw	1995	44	1.5	3	25	304 stainless steel	undrilled	1787
39-1-3300	430 stainless steel	raw	1600	44	1.5	3	25	304 stainless steel	undrilled	1430

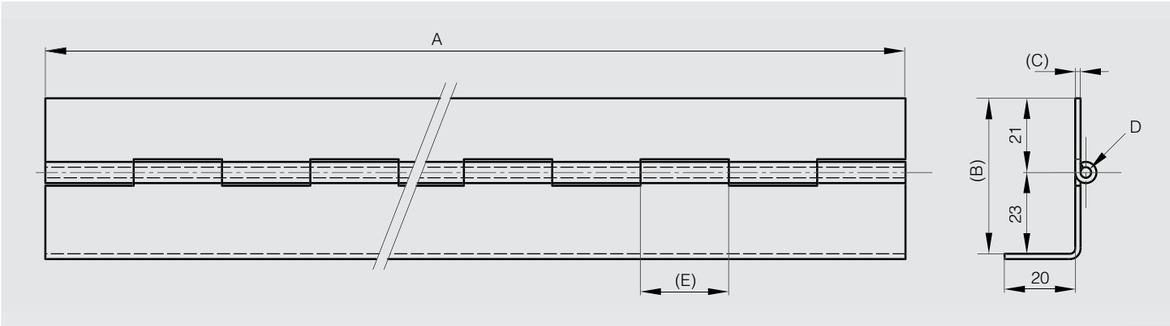

www.METALIKA-KACIN.com

Continuous hinge with two cranked leaves

270° STAINLESS STEEL STEEL RoHS

Opening angle 270°. Other lengths and pin materials are available on request.
Specific drilling requirements are also available on request.

Part number	Material	Finish	A	B	C	D	E	Pin material	Note	Weight (g)
39-1-3634	steel	zinc plated	1995	46	1.5	3	25	304 stainless steel	undrilled	1910
39-1-3635	304 stainless steel	raw	2000	46	1.5	3	25	304 stainless steel	undrilled	1944

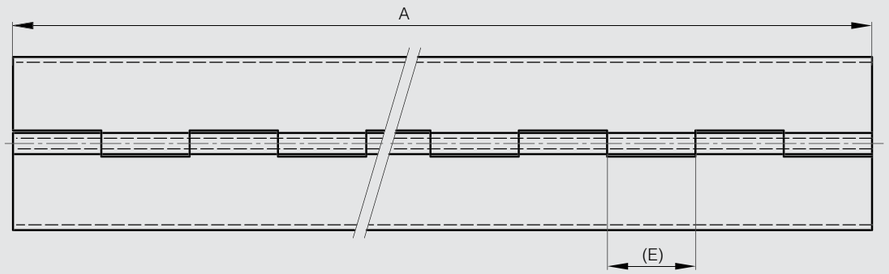

Rolled knuckle continuous hinge “Imperial” dimension

270° STAINLESS STEEL RoHS

Part number	Material	Finish	A	B	C	D	E	Pin material	Note	Weight (g)
42-1-4096	304 stainless steel	raw	6’	1"	0.04"	0.08"	5/8"	stainless steel	undrilled	500
42-1-4089	304 stainless steel	raw	6’	1" 1/4	0.04"	0.08"	5/8"	stainless steel	undrilled	500
42-1-4346	304 stainless steel	raw	6’	1" 1/4	3/64"	1/8"	3/4"	stainless steel	undrilled	790
42-1-4347	304 stainless steel	raw	6’	1" 1/2	3/64"	1/8"	3/4"	stainless steel	undrilled	940
42-1-4348	304 stainless steel	raw	6’	2"	3/64"	1/8"	3/4"	stainless steel	undrilled	1100
42-1-4219	304 stainless steel	raw	6’	2"	1/16"	5/32"	5/8"	stainless steel	undrilled	1500
42-1-4220	304 stainless steel	raw	7’	2" 1/4	1/16"	5/32"	5/8"	stainless steel	undrilled	2000
42-1-4221	304 stainless steel	raw	6’	2" 1/2	1/16"	5/32"	5/8"	stainless steel	undrilled	1800
42-1-4097	304 stainless steel	raw	6’	2" 3/4	1/16"	5/32"	5/8"	stainless steel	undrilled	1900
42-1-4094	304 stainless steel	raw	7’	3"	1/16"	5/32"	5/8"	stainless steel	undrilled	2400
42-1-4095	304 stainless steel	raw	7’	5"	0.08"	1/4"	1" 1/4	stainless steel	undrilled	5000

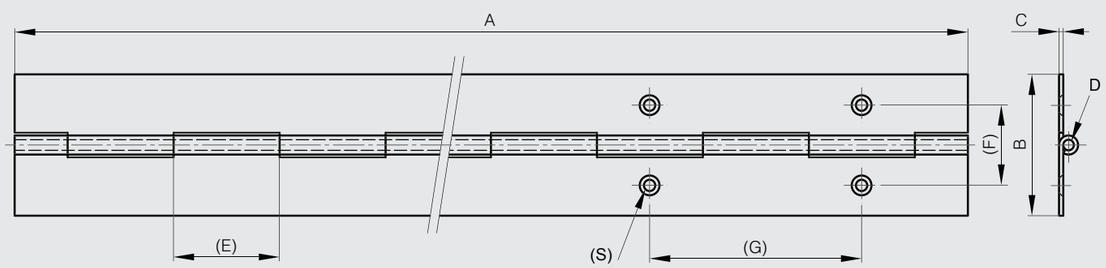

Double knuckle continuous hinge

180° ALU RoHS

Hinge in aluminium profile for 180° opening angle.
Delivered without watertight gasket (to be ordered separately).
With fixed friction washers.
Non-drilled hinges.

Part number	Material	Finish	A	D	K	Pin material	Weight (g)
73-1-3520	6060 T5 alu	clear anodised	2000	5	65	304 stainless steel	2500
73-1-3521	6060 T5 alu	clear anodised	2500	5	15	304 stainless steel	3140
73-1-3522	6060 T5 alu	clear anodised	3000	5	115	304 stainless steel	3780

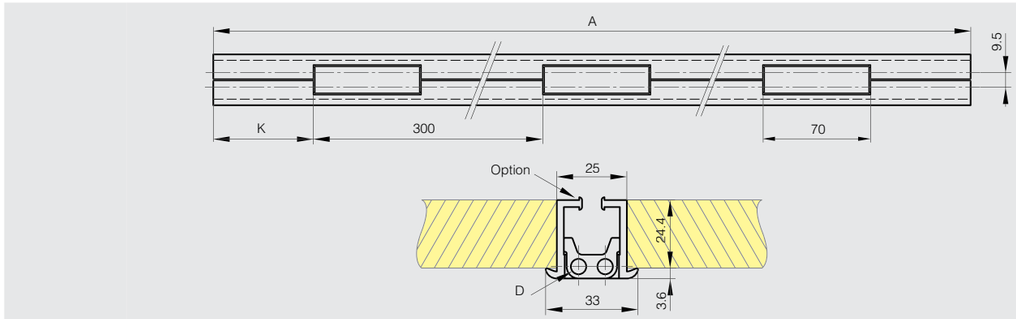

Seal gasket for double knuckle continuous hinge

POLYMER RoHS

Gasket made of soft rubber with a steel clip-on core and foam rubber.

Part number	Material	A
27-1-3816	reinforced rubber profile	2000
27-1-3817	reinforced rubber profile	2500
27-1-3818	reinforced rubber profile	3000

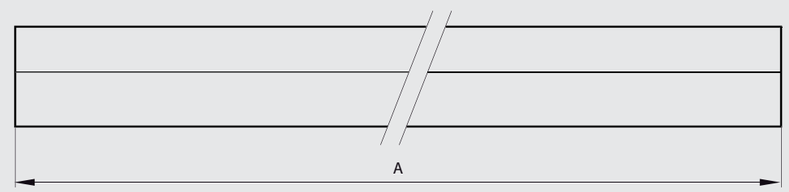

www.METALIKA-KACIN.com

Humidity drain gasket

NEW

POLYMER RoHS

Moisture collector to be positionned on the floor in line with the double knuckle hinge (when closed).

	Part number	Material	A	B	Weight (g)
NEW	99-7-3691	polyurethane	27.6	21	3

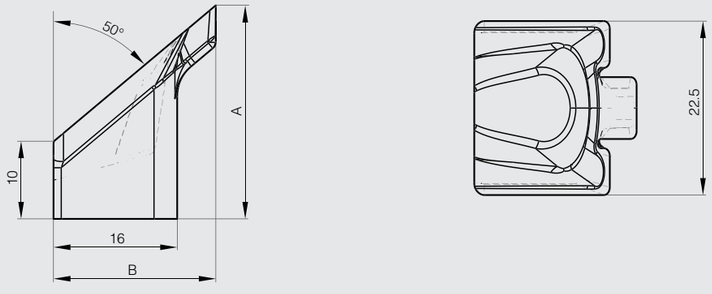

www.METALIKA-KACIN.com

Concealed hinges with spring - 95° opening

NEW

90° STAINLESS STEEL STEEL RoHS

Concealed hinges with 2 positions:
- Closing position: door remains open with an angle of 10°.
- Opening position: door opens up to 95°.

Closing of door due to spring action and door remains slightly opened.
Applications for parcel box:
- Door automatically opens after code entry.
- Door doesn't remain in opening position.

	Part number	Material	Finish	A	B	C	D	Weight (g)
NEW	71-1-3812	steel	zinc plated	51	75	3	6	200
NEW	71-1-3867	304 stainless steel	raw	51	75	3	6	200

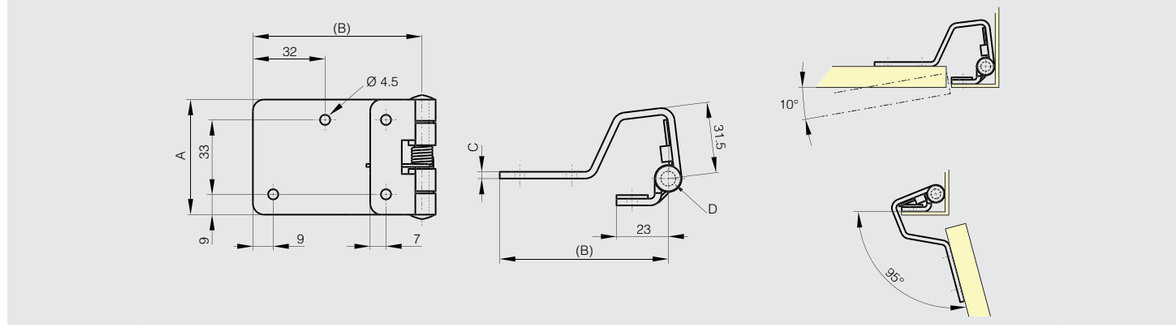

www.METALIKA-KACIN.com

Concealed hinges without spring - 95° opening

NEW

90° STAINLESS STEEL STEEL RoHS

	Part number	Material	Finish	A	B	C	D	Weight (g)
NEW	60-1-4007	steel	zinc plated	51	75	3	6	210
NEW	62-1-4008	304 stainless steel	raw	51	75	3	6	210

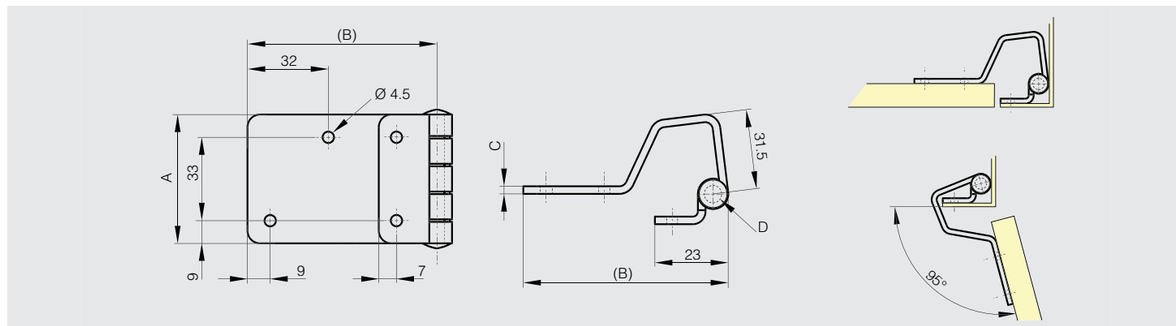

Concealed hinges for nested doors only

Concealed hinge with friction - 90° opening

90° STAINLESS STEEL

Initial torque (0.7 N.m) may vary from -20% to +40%.
For indoor use only.
Can be used both for horizontal and vertical applications.

Part number	Material	Finish	A	B	C	Torque	Weight (g)
70-7-3623	304 stainless steel	polished	40	67	29.5	0.7 N.m	50

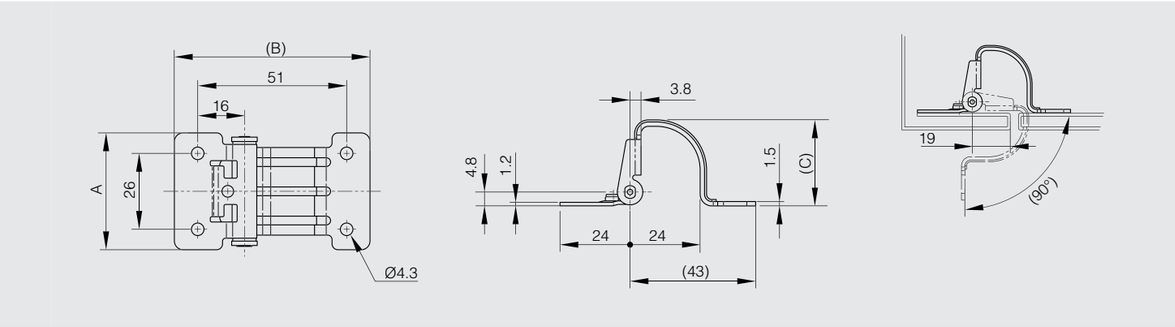

Concealed hinge - 180° opening

180° STAINLESS STEEL RoHS

Part number	Material	Finish	A	B	C	D	E	F	S	Weight (g)
70-7-3544	304 stainless steel	satin	50	19	38	14	18.2	11	2.7	33

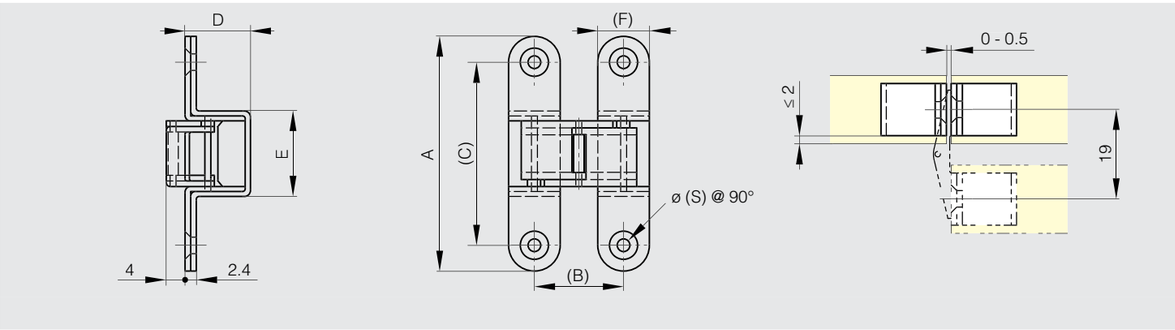

Concealed hinges for surface mounted doors or nested doors

Concealed hinges - 90° opening

NEW

90° STAINLESS STEEL STEEL RoHS

Pins and links in 430 stainless steel for 70-1-3520.
Pins and links in 316L stainless steel for 70-1-3625.
Mounting features:
- For nested doors or surface mounted doors.
- LH or RH options.
- For horizontal or vertical applications.

A full product data sheet is available on our website.
Refer to the product data sheet on our website for mounting instructions.

	Part number	Material	Finish	A	B	C	Weight (g)
	70-1-3520	steel	zinc plated	44	29	32	64
NEW	70-1-3625	316L stainless steel	raw	44	29	32	64

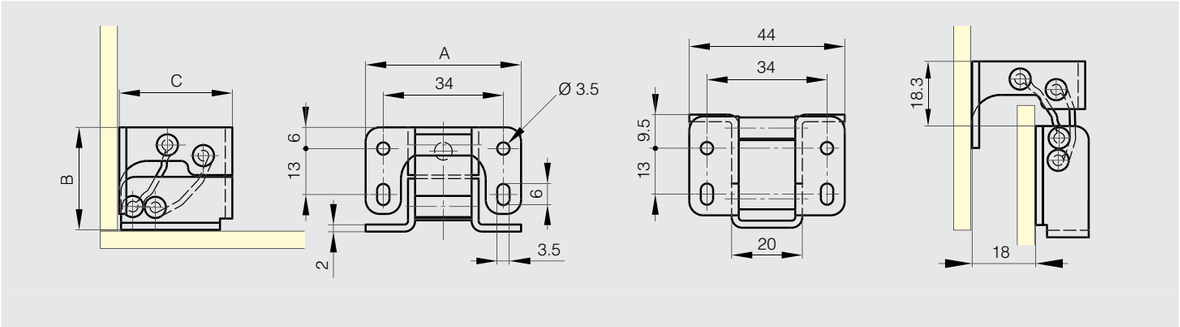

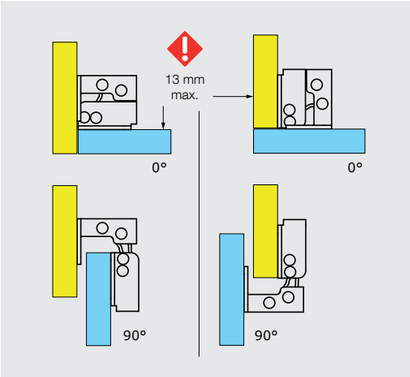

Nested door assembly shown

Surface mounted assembly shown

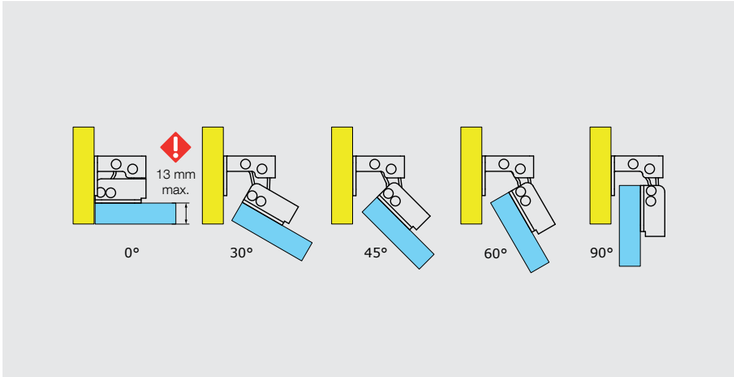

Nested door assembly shown

www.METALIKA-KACIN.com

Concealed hinges - 125° opening

NEW

120° STAINLESS STEEL STEEL RoHS

Links in aluminium.
Pins in 430 stainless steel for 70-1-3639.
Pins in 304 Cu stainless steel for 70-1-3640.
Mounting features:
- For nested doors or surface mounted doors.
- LH or RH options.
- For horizontal or vertical applications.

Opening angle differs according to door thickness:
- 2 mm thickness: opening angle of 125°.
- 8 mm thickness: opening angle of 110°.
- 13 mm thickness: opening angle of 100°.

Please ask us for bespoke solutions.

	Part number	Material	Finish	A	B	C	Weight (g)
NEW	70-1-3639	steel	zinc plated	44	29	32	60
NEW	70-1-3640	316L stainless steel	raw	44	29	32	60

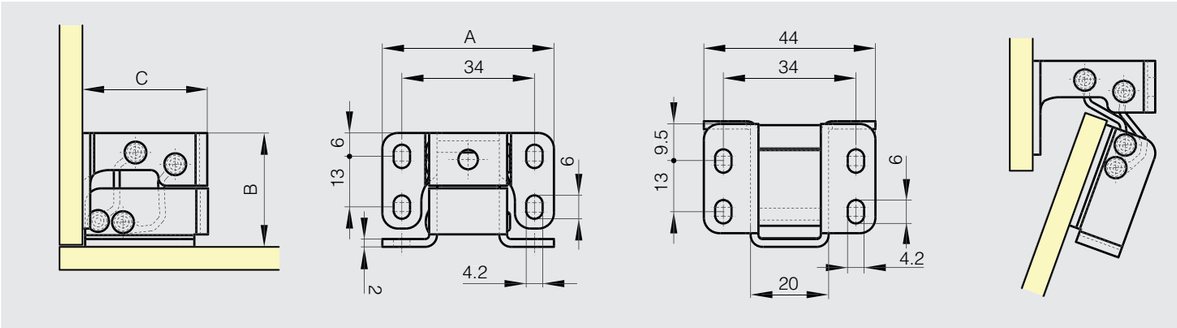

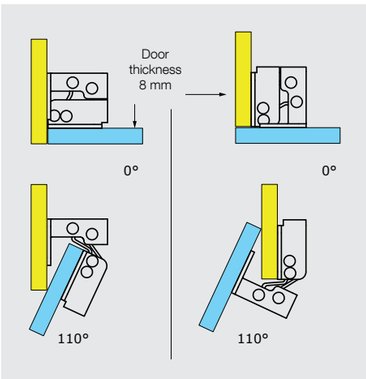

Nested door assembly shown

Surface mounted assembly shown

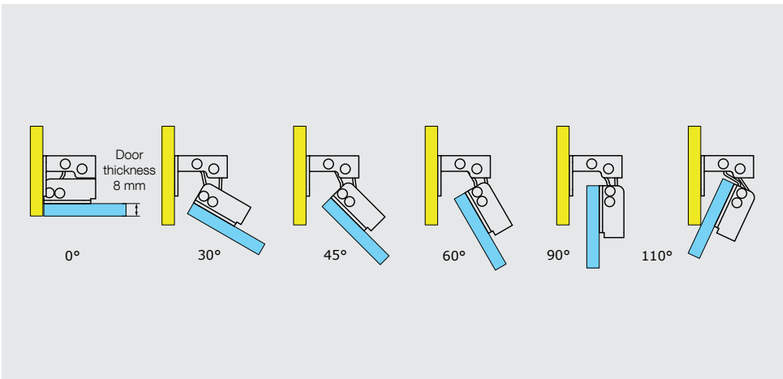

Nested door assembly shown

Concealed hinges
www.metalika-kacin.com
Concealed hinges for surface mounted doors or nested doors

Concealed hinge - 110° opening

110° STEEL RoHS

Heavy duty concealed hinge.
Tested to 10,000 cycles using 2 hinges with a door weight of 25 kg measuring 1 m x 1 m.
Links in anodised aluminium.

Part number	Material	Finish	A	B	C	Weight (g)
70-1-3557	steel	zinc plated	102	80.5	76	520

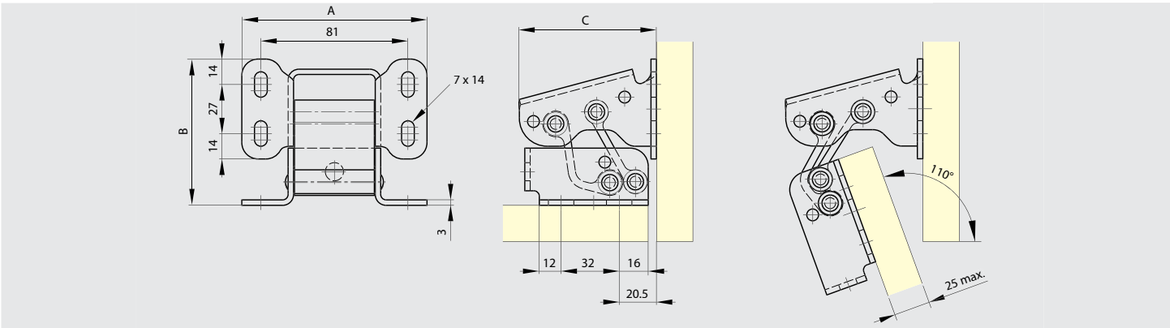

Spring loaded concealed hinge - 110° opening

NEW

110° STEEL RoHS

For horizontal application only.
Fixing plate in polymer.

	Part number	Material	Finish	A	B	C	Weight (g)
NEW	71-1-3611	steel	black zinc plated	60	162.4	71.4	132

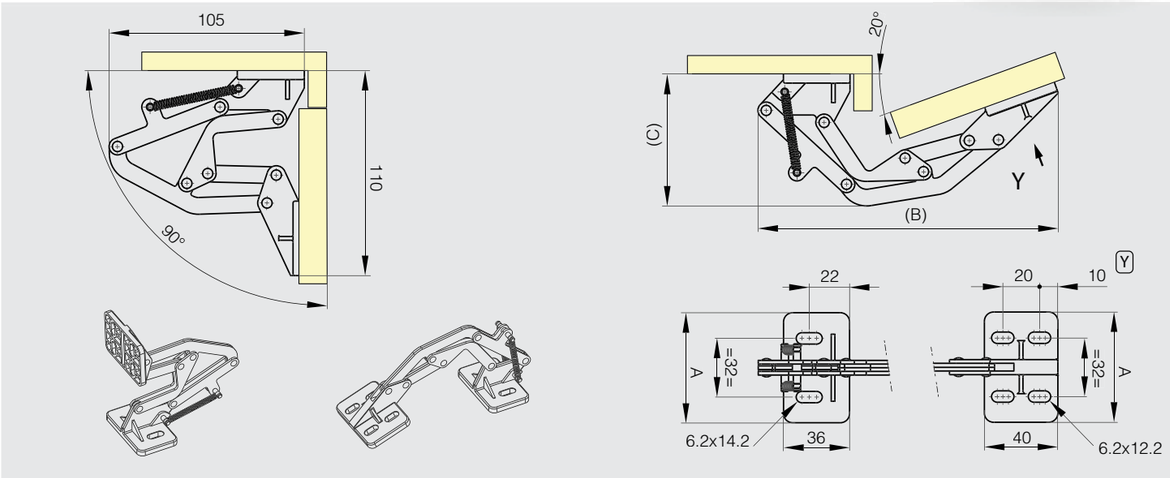

Spring loaded concealed hinges - 90° opening

90° STAINLESS STEEL STEEL RoHS

Part number	Material	Finish	A	B	C	Weight (g)
70-1-9003	steel	nickel plated	44	104.5	26	70
70-1-9000	316 stainless steel	raw	44	104.5	26	70

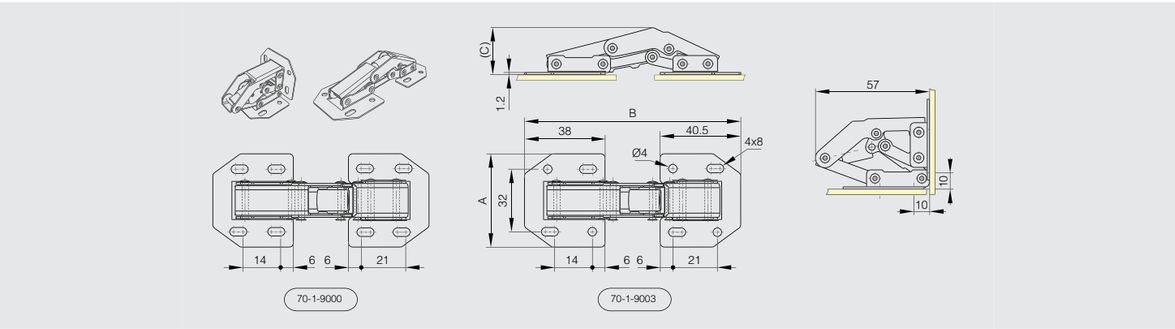

Spring loaded concealed hinges - 150° opening

For door thickness max: 20 mm.

150° STAINLESS STEEL STEEL RoHS

Part number	Material	Finish	A	B	C	Weight (g)
70-1-9001	steel	nickel plated	52	121	73.5	140
70-1-9002	304 stainless steel	raw	52	121	73.5	140

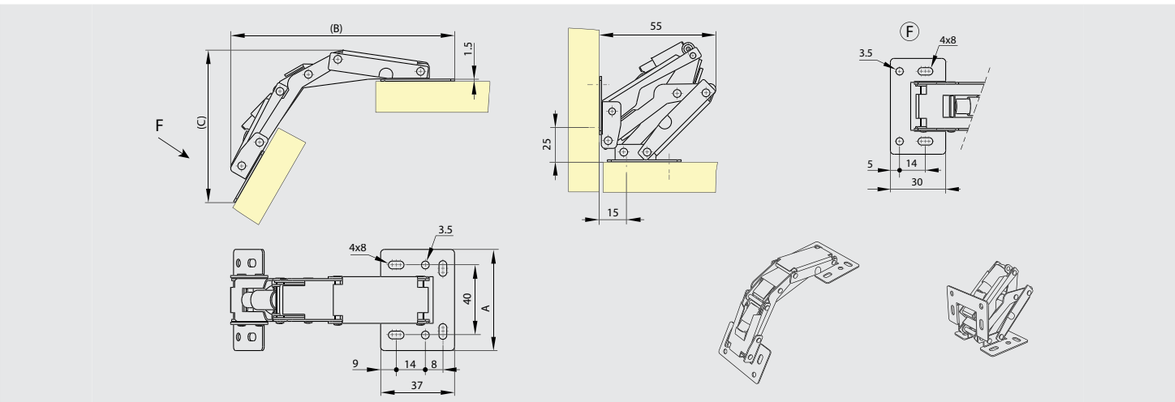

Concealed hinges with two cranked leaves - undrilled - 120° opening - version A

NEW

120° STAINLESS STEEL RoHS

Hinges for side door of baggage compartment (bus and coach, bodywork...)

	Part number	Material	Finish	A	B	C	D	E	Weight (g)
NEW	39-1-3885	304 stainless steel	raw	300	44.1	1.5	3	12.5	440
NEW	39-1-3887	304 stainless steel	raw	600	44.1	1.5	3	12.5	880

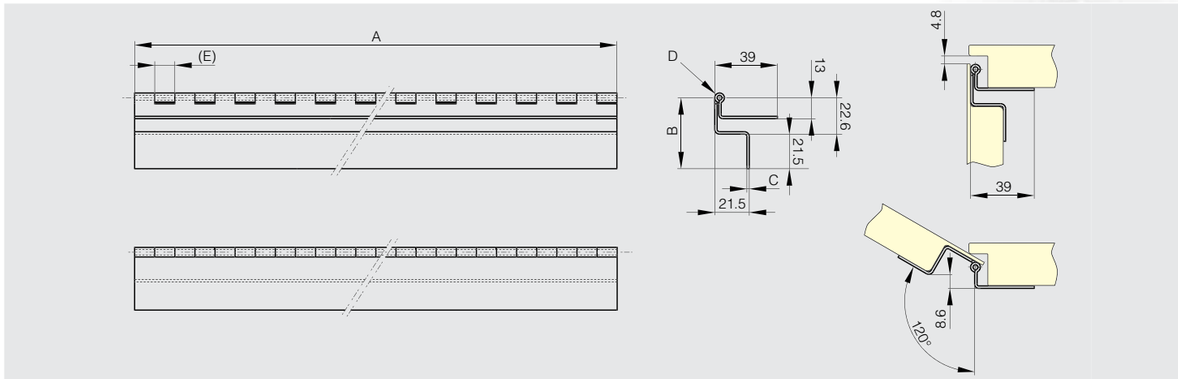

Concealed hinges with two cranked leaves - drilled - 120° opening - version A

NEW

120° STAINLESS STEEL RoHS

Hinges for side door of baggage compartment (bus and coach, bodywork...)
Use rivets for 4.2 diameter holes (door side).
Use self-drilling screws for 12.2 diameter holes (frame side).

	Part number	Material	Finish	A	B	C	D	E	G	H	Weight (g)
NEW	39-1-3886	304 stainless steel	raw	300	44.1	1.5	3	12.5	160	70	430
NEW	39-1-3888	304 stainless steel	raw	600	44.1	1.5	3	12.5	160	60	870

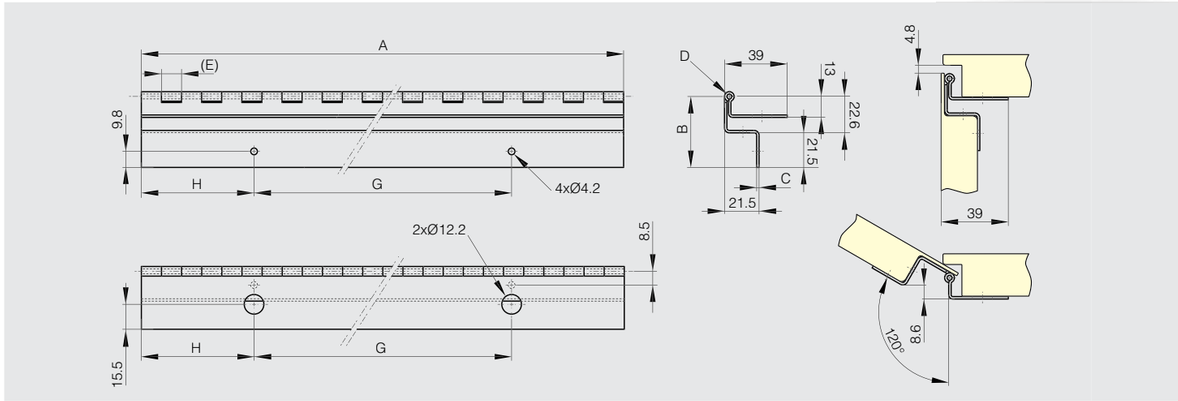

www.METALIKA-KACIN.com

Concealed hinges for surface mounted doors or nested doors

Concealed hinges with two cranked leaves - undrilled - 120° opening - version B

NEW 120° STAINLESS STEEL RoHS

Hinges for side door of baggage compartment (bus and coach, bodywork...)

	Part number	Material	Finish	A	B	C	D	E	Weight (g)
NEW	39-1-3889	304 stainless steel	raw	300	54.1	1.5	3	12.5	410
NEW	39-1-3891	304 stainless steel	raw	600	54.1	1.5	3	12.5	870

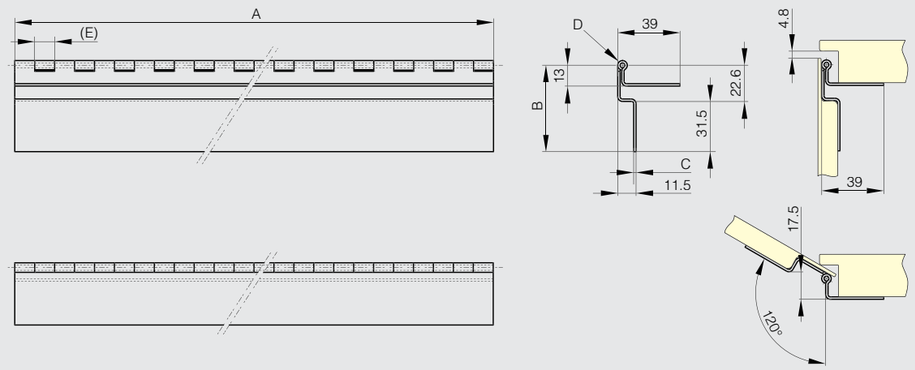

Concealed hinges with two cranked leaves - drilled - 120° opening - version B

NEW 120° STAINLESS STEEL RoHS

Hinges for side door of baggage compartment (bus and coach, bodywork...)
Use rivets for 4.2 diameter holes (door side).
Use self-drilling screws for 12.2 diameter holes (frame side).

	Part number	Material	Finish	A	B	C	D	E	G	H	J	K	L	Weight (g)
NEW	39-1-3890	304 stainless steel	raw	300	54.1	1.5	3	12.5	160	30	80	70	160	430
NEW	39-1-3892	304 stainless steel	raw	600	54.1	1.5	3	12.5	260	40	130	60	160	870

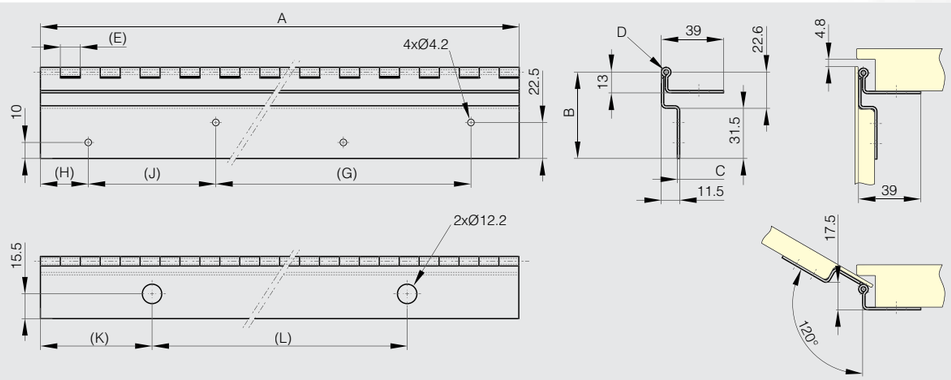

Forged hinges

Forged hinges - 3 knuckles

NEW 270° STAINLESS STEEL STEEL RoHS

Riveted pin.
Other dimensions or variants are available on request.
Raw steel pin for raw steel hinges.
304 stainless steel pin for 304 stainless steel hinges.

	Part number	Material	Finish	A	B	C	D	E	Note	Weight (g)
	72-1-3346	steel	raw	32	32	3	4	4	1 MR (railway code)	33
	72-1-3348	steel	raw	32	50	3	4	4	3 MR (railway code)	47
	72-1-3349	steel	raw	50	50	3	4	4	4 MR (railway code)	75
	72-1-3352	steel	raw	50	50	5	6	6	7 MR (railway code)	122
	72-1-3351	steel	raw	50	80	3	4	4	6 MR (railway code)	108
	72-1-3354	steel	raw	50	80	5	6	6	9 MR (railway code)	182
	72-1-3990	304 stainless steel	raw	50	50	3	4	4	4 MR (railway code)	71
NEW	72-1-4186	304 stainless steel	raw	50	80	3	4	4	6 MR (railway code)	112
	72-1-4187	304 stainless steel	raw	50	80	5	6	6	9 MR (railway code)	182

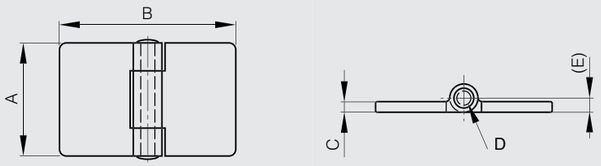

Forged hinges with reversed leaves - 3 knuckles

NEW 270° STAINLESS STEEL STEEL RoHS

Riveted pin.
Other dimensions or variants are available on request.
Raw steel pin for raw steel hinges.
304 stainless steel pin for 304 stainless steel hinges.

	Part number	Material	Finish	A	B	C	D	E	Note	Weight (g)
	72-1-3380	steel	raw	32	50	3	4	4	17 MR (railway code)	33
	72-1-3381	steel	raw	50	50	3	4	4	20 MR (railway code)	70
	72-1-3384	steel	raw	50	50	5	6	6	23 MR (railway code)	122
NEW	72-1-3383	steel	raw	50	80	3	4	4	22 MR (railway code)	104
	72-1-3386	steel	raw	50	80	5	6	6	25 MR (railway code)	182
	72-1-3992	304 stainless steel	raw	50	50	3	4	4	20 MR (railway code)	71
	72-1-3993	304 stainless steel	raw	50	80	3	4	4	22 MR (railway code)	112

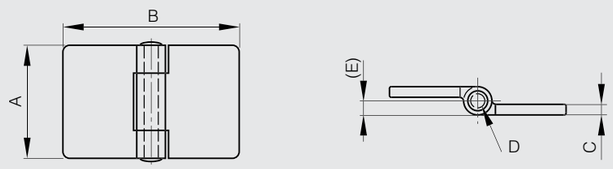

Forged hinges - 5 knuckles

NEW

270° STAINLESS STEEL STEEL RoHS

Riveted pin : (except part number: 72-1-4288 with a removable pin).
Other dimensions or variants are available on request.
Raw steel pin for raw steel hinges.
304 stainless steel pin for 304 stainless steel hinges.

	Part number	Material	Finish	A	B	C	D	E	Note	Weight (g)
NEW	72-1-4289	steel	raw	60	60	6	6	6		283
	72-1-3410	steel	raw	80	80	5	6	6	1 FR (railway code)	283
	72-1-3414	steel	raw	80	80	8	10	10	14 FR (railway code)	485
	72-1-3412	steel	raw	80	130	5	6	6	3 FR (railway code)	436
	72-1-3416	steel	raw	80	130	8	10	10	16 FR (railway code)	761
	72-1-3413	steel	raw	125	80	5	6	6	11 FR (railway code)	440
	72-1-3417	steel	raw	125	130	8	10	10	24 FR (railway code)	1240
NEW	72-1-4290	304 stainless steel	raw	60	60	6	6	6		283
	72-1-3991	304 stainless steel	raw	80	80	5	6	6	1 FR (railway code)	283
NEW	72-1-4279	304 stainless steel	raw	80	130	5	6	6	3 FR (railway code)	436
NEW	72-1-4288	304 stainless steel	raw	80	130	5	6	6	Removable pin	436

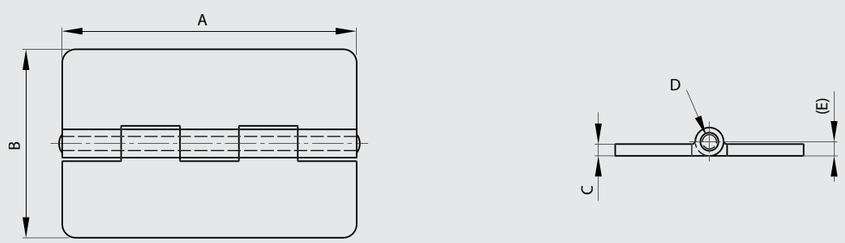

www.METALIKA-KACIN.com

Forged lift-off hinges

270° STEEL RoHS

With raw brass washer.

Part number	Material	Finish	A	B	C	D	E	F	G	S	Note	Weight (g)
14-1-3328	steel	raw	48	40	3	4	4	32	8	4	type 1	52
14-1-3329	steel	raw	48	40	3	4	4	32	8	4	type 2	52
14-1-3330	steel	raw	60	50	3.5	5	5	40	10	5.5	type 1	97
14-1-3331	steel	raw	60	50	3.5	5	5	40	10	5.5	type 2	95
14-1-3332	steel	raw	72	60	4	6	6	48	12	6.5	type 1	156
14-1-3333	steel	raw	72	60	4	6	6	48	12	6.5	type 2	156
14-1-3334	steel	raw	84	70	4.5	7	7	56	14	7.5	type 1	245
14-1-3335	steel	raw	84	70	4.5	7	7	56	14	7.5	type 2	245
14-1-3336	steel	raw	96	80	5	8	8	66	16	8.5	type 1	360
14-1-3337	steel	raw	96	80	5	8	8	66	16	8.5	type 2	360

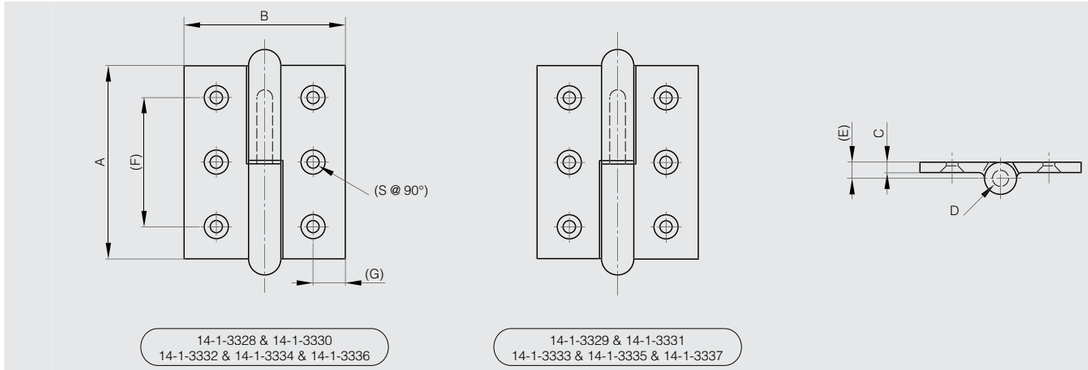

www.METALIKA-KACIN.com

Modulo range: composed of parts to be assembled by customer (or on request)

Pin is made of either an expanded pin (BG) or a headed pin (BT) with a plug (VA).

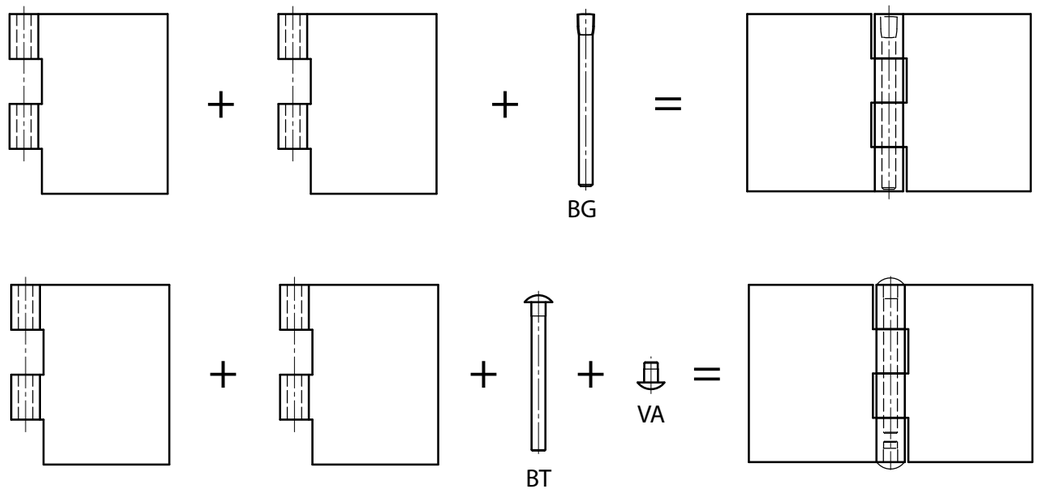

BG: Expanded pin
BT: Headed pin
VA: Plug

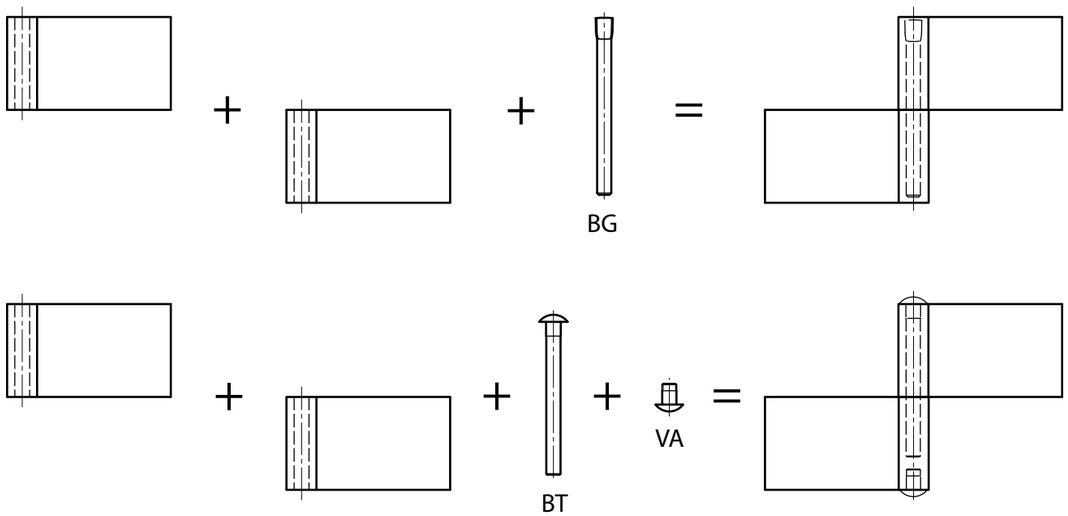

Parts can be delivered assembled, on request (**part number 91-1-0001**).

NOTE:
- Only leaves with the same thickness can be fitted together.
- The expanded pin (BG) can be assembled or disassembled with a hammer.
- The headed pin BT and the plug VA are fitted together with a hammer and make the pin non removable.

Modifications:
This range of hinges has been designed to make modifications easier (cranking, drilling…) for our customers.
However any in-house modification is possible with a MOQ of 250 units for stainless steel material and 500 units for steel material.
Please ask for more information.

Half leaves for Modulo hinges - thickness 3 mm

Leaves can be combined together and with either:
- a 6 mm diameter expanded pin (BG) (part numbers 27-1-3820, 27-1-3823),
- a 6 mm pin in POM (part number 27-1-3938),
- a 6 mm diameter headed pin (BT) (part numbers 27-1-3826, 27-1-3829) with a plug (part numbers 27-1-3832, 27-1-3835).

Part number	Material	Finish	A	B	C	D	Weight (g)
50-1-3991	steel	raw	80	30	3	6	74
50-1-3992	steel	raw	80	40	3	6	92.5
50-1-3993	steel	raw	80	50	3	6	111.4
50-1-3994	steel	raw	80	60	3	6	130.2
50-1-3995	steel	raw	80	80	3	6	168
52-1-3771	304 stainless steel	deburred	80	30	3	6	74
52-1-3772	304 stainless steel	deburred	80	40	3	6	92.5
52-1-3773	304 stainless steel	deburred	80	50	3	6	111.4
52-1-3774	304 stainless steel	deburred	80	60	3	6	130.2
52-1-3775	304 stainless steel	deburred	80	80	3	6	168

Half leaves for Modulo hinges - thickness 4 mm

Leaves can be combined together and with either:
- a 8 mm diameter expanded pin (BG) (part numbers 27-1-3821, 27-1-3824),
- a 8 mm diameter headed pin (BT) (part numbers 27-1-3827, 27-1-3830) with a plug (part numbers 27-1-3833, 27-1-3836).

Part number	Material	Finish	A	B	C	D	Weight (g)
50-1-3996	steel	raw	100	30	4	8	131
50-1-3997	steel	raw	100	40	4	8	162.5
50-1-3998	steel	raw	100	50	4	8	194
50-1-3999	steel	raw	100	60	4	8	225.3
50-1-4000	steel	raw	100	80	4	8	288
52-1-3776	304 stainless steel	deburred	100	30	4	8	131
52-1-3777	304 stainless steel	deburred	100	40	4	8	162.5
52-1-3778	304 stainless steel	deburred	100	50	4	8	194
52-1-3779	304 stainless steel	deburred	100	60	4	8	225.3
52-1-3780	304 stainless steel	deburred	100	80	4	8	288

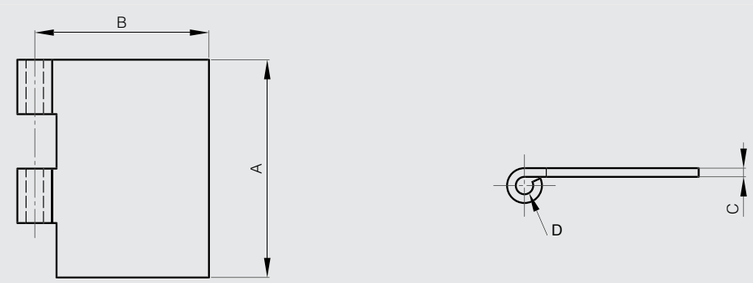

Half leaves for Modulo hinges - thickness 5 mm

Leaves can be combined together and with either:
- a 10 mm diameter expanded pin (BG) (part numbers 27-1-3822, 27-1-3825),
- a 10 mm diameter headed pin (BT) (part numbers 27-1-3828, 27-1-3831) with a plug (part numbers 27-1-3834, 27-1-3837).

Part number	Material	Finish	A	B	C	D	Weight (g)
50-1-4001	steel	raw	120	30	5	10	211
50-1-4002	steel	raw	120	40	5	10	258
50-1-4003	steel	raw	120	50	5	10	305.2
50-1-4004	steel	raw	120	60	5	10	352.3
50-1-4005	steel	raw	120	80	5	10	446.5
52-1-3781	304 stainless steel	deburred	120	30	5	10	211
52-1-3782	304 stainless steel	deburred	120	40	5	10	258
52-1-3783	304 stainless steel	deburred	120	50	5	10	305.2
52-1-3784	304 stainless steel	deburred	120	60	5	10	352.3
52-1-3785	304 stainless steel	deburred	120	80	5	10	446.5

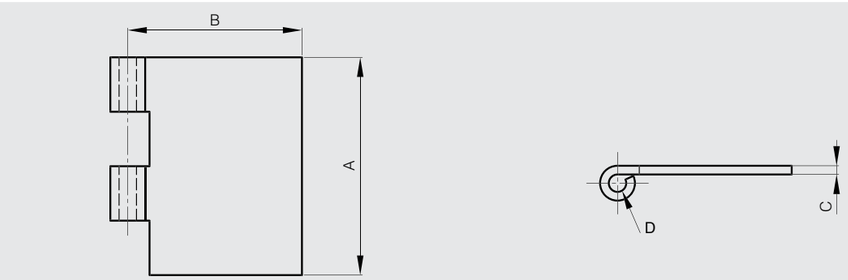

Half leaves for Modulo pin hinges - thickness 3 mm

Leaves can be combined together and with either:
- a 6 mm diameter expanded pin (BG) (part numbers 27-1-3820, 27-1-3823),
- a 6 mm pin in POM (part number 27-1-3938),
- a 6 mm diameter headed pin (BT) (part numbers 27-1-3826, 27-1-3829) with a plug (part numbers 27-1-3832, 27-1-3835).

Part number	Material	Finish	A	B	C	D	Weight (g)
12-1-3866	steel	raw	40	30	3	6	36.9
12-1-3867	steel	raw	40	50	3	6	55.7
12-1-3868	steel	raw	40	80	3	6	84
12-1-3941	steel	raw	40	20	3	6	24.6
12-1-3943	steel	raw	40	120	3	6	126
12-1-3869	304 stainless steel	deburred	40	30	3	6	36.9
12-1-3870	304 stainless steel	deburred	40	50	3	6	55.7
12-1-3871	304 stainless steel	deburred	40	80	3	6	84
12-1-3942	304 stainless steel	deburred	40	20	3	6	24.6
12-1-3944	304 stainless steel	deburred	40	120	3	6	126

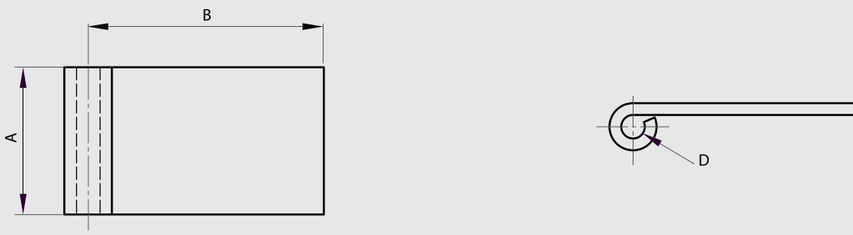

Half leaves for Modulo pin hinges - thickness 4 mm

Leaves can be combined together and with either:
- a 8 mm diameter expanded pin (BG) (part numbers 27-1-3821, 27-1-3824),
- a 8 mm diameter headed pin (BT) (part numbers 27-1-3827, 27-1-3830) with a plug (part numbers 27-1-3833, 27-1-3836).

Part number	Material	Finish	A	B	C	D	Weight (g)
12-1-3872	steel	raw	50	30	4	8	65.6
12-1-3873	steel	raw	50	50	4	8	97
12-1-3874	steel	raw	50	80	4	8	144
12-1-3875	304 stainless steel	deburred	50	30	4	8	65.6
12-1-3876	304 stainless steel	deburred	50	50	4	8	97
12-1-3877	304 stainless steel	deburred	50	80	4	8	144

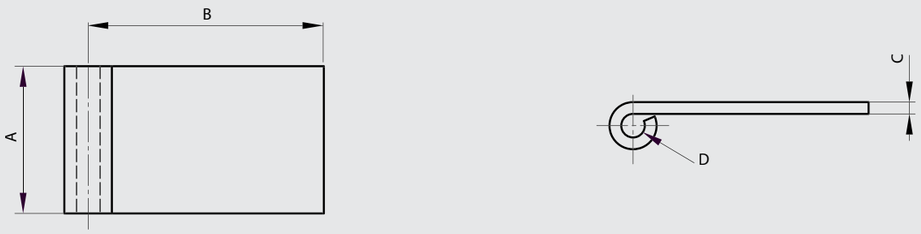

Half leaves for Modulo pin hinges - thickness 5 mm

Leaves can be combined together and with either:
- a 10 mm diameter expanded pin (BG) (part numbers 27-1-3822, 27-1-3825),
- a 10 mm diameter headed pin (BT) (part numbers 27-1-3828, 27-1-3831) with a plug (part numbers 27-1-3834, 27-1-3837).

Part number	Material	Finish	A	B	C	D	Weight (g)
12-1-3878	steel	raw	60	40	5	10	129
12-1-3879	steel	raw	60	60	5	10	176.2
12-1-3880	steel	raw	60	80	5	10	224
12-1-3881	304 stainless steel	deburred	60	40	5	10	129
12-1-3882	304 stainless steel	deburred	60	60	5	10	176.2
12-1-3883	304 stainless steel	deburred	60	80	5	10	224

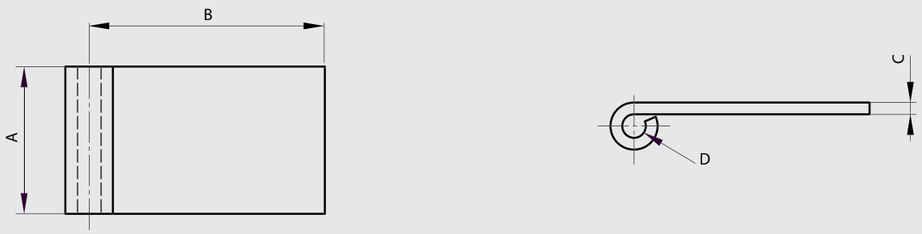

Pin in POM for Modulo system

POLYMER RoHS

This pin can be combined with Modulo hinges for thickness 3 mm only.
It enables you to make a hinge pin.
Pin can be easily removed without tool.

Part number	Material	Finish	D	L	Weight (g)
27-1-3938	POM	white	6	80	2

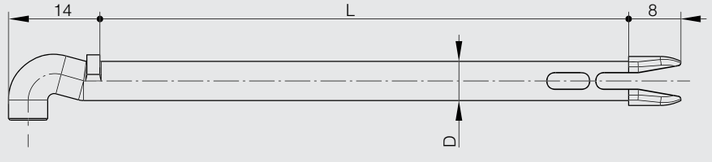

Expanded pin BG for Modulo system

STAINLESS STEEL STEEL RoHS

This pin alone enables you to make a hinge pin for Modulo hinges.

Part number	Material	Finish	D	L	Weight (g)
27-1-3820	steel	zinc plated	6	80	17.7
27-1-3821	steel	zinc plated	8	100	39.4
27-1-3822	steel	zinc plated	10	120	74
27-1-3823	304 stainless steel	raw	6	80	17.7
27-1-3824	304 stainless steel	raw	8	100	39.4
27-1-3825	304 stainless steel	raw	10	120	74

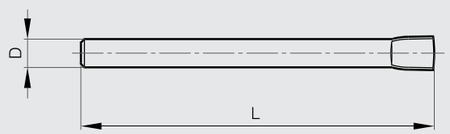

BG Broche Gonflée
Expanded pin
Gestauchter Stift

Headed pin BT for Modulo system

STAINLESS STEEL STEEL RoHS

This pin combined with a plug (VA) enables you to make a hinge pin for Modulo hinges.

Part number	Material	Finish	D	E	L	Weight (g)
27-1-3826	steel	zinc plated	6	3	66	15.5
27-1-3827	steel	zinc plated	8	4	86	35.5
27-1-3828	steel	zinc plated	10	5	106	68.4
27-1-3829	304 stainless steel	raw	6	3	66	15.5
27-1-3830	304 stainless steel	raw	8	4	86	35.5
27-1-3831	304 stainless steel	raw	10	5	106	68.4

Plug (VA) for Modulo system

STAINLESS STEEL STEEL RoHS

This plug combined with a headed pin (BT) enables you to make a hinge pin for Modulo hinges.

Part number	Material	Finish	D	F	L	Weight (g)
27-1-3832	steel	zinc plated	6	12	12	3.3
27-1-3833	steel	zinc plated	8	16	12	6.3
27-1-3834	steel	zinc plated	10	20	12	10.5
27-1-3835	304 stainless steel	raw	6	12	12	3.3
27-1-3836	304 stainless steel	raw	8	16	12	6.3
27-1-3837	304 stainless steel	raw	10	20	12	10.5

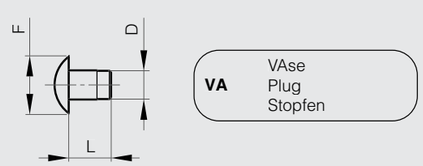

VA VAse
Plug
Stopfen

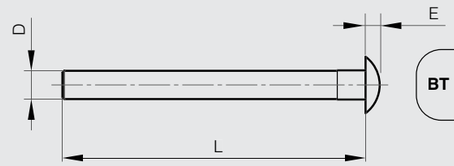

BT Broche à Tête
Headed pin
Stift mit Kopf

www.METALIKA-KACIN.com
www.METALIKA-KACIN.com

Heavy duty hinge - 66 x 230 mm

Stainless steel riveted pin.

270° STEEL RoHS

Part number	Material	Finish	A	B	C	D	S	Weight (g)
50-1-4060	steel	zinc plated	66	230	5	10	12	622

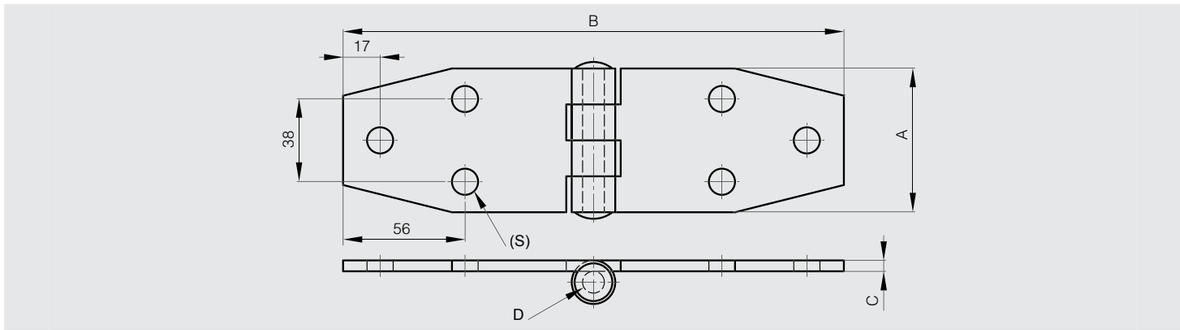

Heavy duty hinge - 66 x 215 mm

Stainless steel riveted pin.

180° STEEL RoHS

Part number	Material	Finish	A	B	C	D	S	Weight (g)
50-1-4061	steel	zinc plated	66	215	5	10	12	622

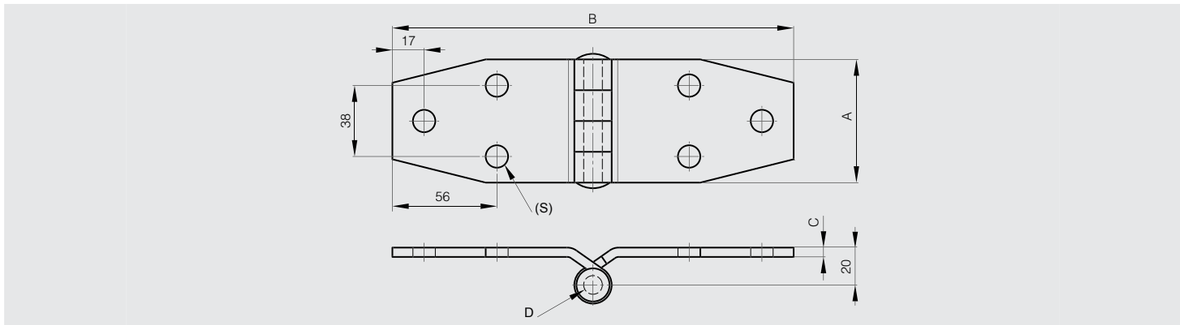

www.METALIKA-KACIN.com

Heavy duty hinges - 65 x 230 mm

Riveted pin.

270° STAINLESS STEEL RoHS

Part number	Material	Finish	A	B	C	D	E	S	Note	Weight (g)
52-1-3553	304 stainless steel	brightened	65	230	4	10	39	6.5	drilled	430
52-1-3593	304 stainless steel	brightened	65	230	4	10	39		undrilled	450

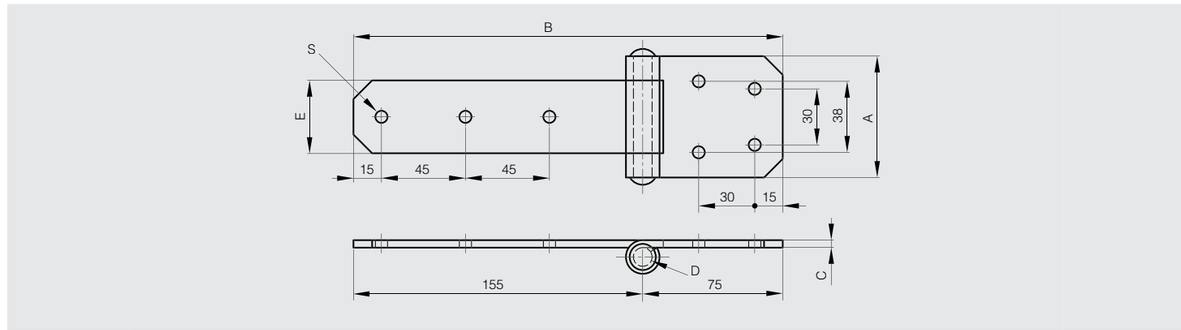

Heavy duty hinge - 130 x 95 mm

Stainless steel riveted pin.

270° STEEL RoHS

Part number	Material	Finish	A	B	C	D	Weight (g)
50-1-3944	steel	raw	130	95	4	10	580

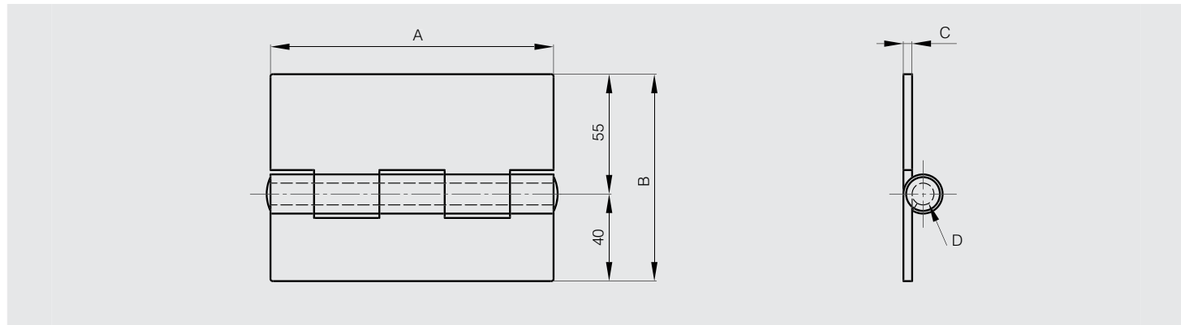

www.METALIKA-KACIN.com

Flat top weld-on stainless steel hinges - stainless steel pin - brass washer

Fixed pin and washer.

Part number	Material	Finish	A	B	C	D	Weight (g)
14-7-3693	304 stainless steel	raw	60	12	10	6	40
14-7-3696	304 stainless steel	raw	80	16	13	7	90
14-7-3697	304 stainless steel	raw	100	20	16	9	115
14-7-3698	304 stainless steel	raw	120	20	16	9	135

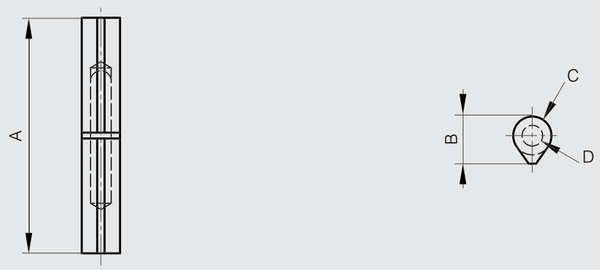

Swivel pin with ball bearing

Part number	Material	Finish	A	B	C	D	Weight (g)
14-1-3883	steel	raw	63	115	28	10	482

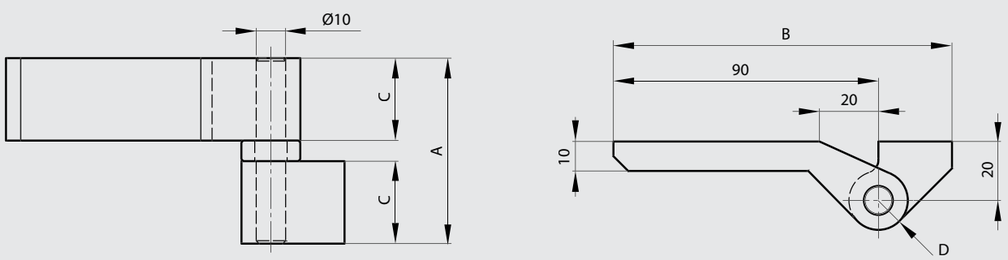

Flag hinges A - steel pin - brass washer

Fixed pin.

Part number	Material	Finish	A	B	C	D	E	Weight (g)
14-7-3634	steel	raw	63	80	4.2	8	15.5	150
14-7-3635	steel	raw	83.5	80	5.1	8	16	250
14-7-3636	steel	raw	104	92	5.5	9	17	390
14-7-3637	steel	raw	124	108	6.5	10	19	600
14-7-3638	steel	raw	144	108	6.5	10	19	720

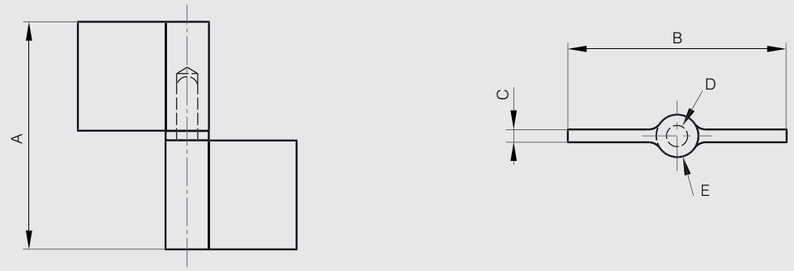

Flag hinges B - steel pin - brass washer

Fixed pin.

Part number	Material	Finish	A	B	C	D	E	Note	Weight (g)
14-7-3641	steel	raw	83.5	80	5.1	8	16	type 1	250
14-7-3642	steel	raw	83.5	80	5.1	8	16	type 2	250
14-7-3643	steel	raw	104	92	5.5	9	17	type 1	390
14-7-3644	steel	raw	104	92	5.5	9	17	type 2	390

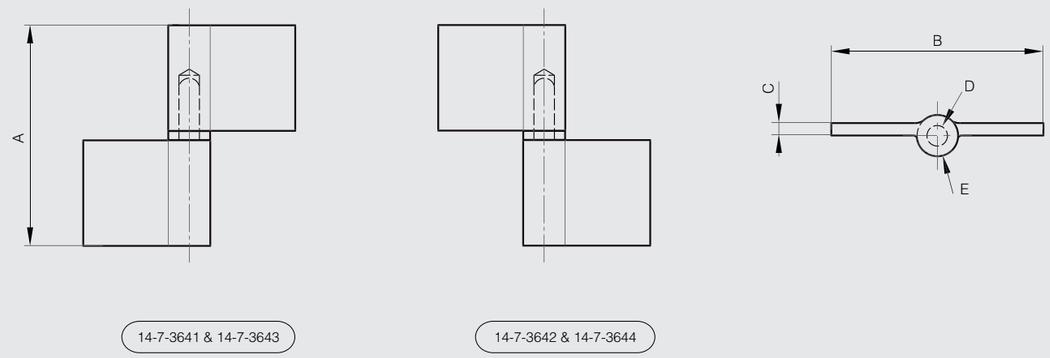

www.METALIKA-KACIN.com

Square hinges with two offset leaves and removable pin - no holes

Removable pin.

Part number	Material	Finish	A	B	C	D	Weight (g)
50-7-3347	steel	raw	40	40	2	4	36
50-7-3348	steel	raw	50	50	2	6	64
50-7-3349	steel	raw	60	60	2	6	84
50-7-3350	steel	raw	70	70	2	6	112

Square hinges with two offset leaves and removable pin - with 4 holes

Removable pin.

Part number	Material	Finish	A	B	C	D	F	G	S	Weight (g)
50-7-3580	steel	zinc plated	40	40	2	4	7	24	4.3	34
50-7-3581	steel	zinc plated	50	50	2	6	8	34	5	61
50-7-3582	steel	zinc plated	60	60	2	6	8	40	4.5	82
52-1-3608	304 stainless steel	raw	40	40	2	4	8	24	4	34
52-1-3610	304 stainless steel	raw	50	50	2	6	8	34	4.5	61
52-1-3612	304 stainless steel	raw	60	60	2	6	8	40	4.5	82

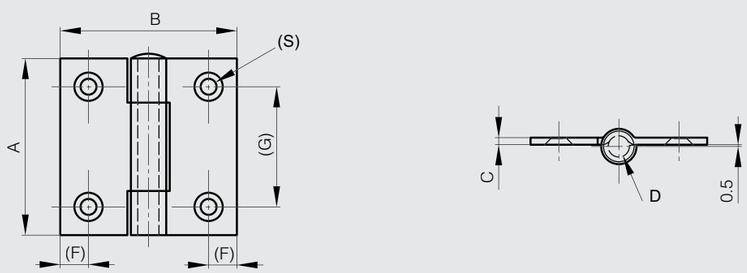

Square hinges with two offset leaves and removable pin - with 6 holes

Removable pin.

Part number	Material	Finish	A	B	C	D	F	G	H	S	Weight (g)
50-7-3583	steel	zinc plated	70	70	2	6	8	50	10	4	156
50-7-3584	steel	zinc plated	80	80	2.5	6	8	60	12.5	4	164
52-1-3614	304 stainless steel	raw	70	70	2	6	8	50	10	4.5	156
52-1-3616	304 stainless steel	raw	80	80	2.5	6	8	60	12.5	4.5	164

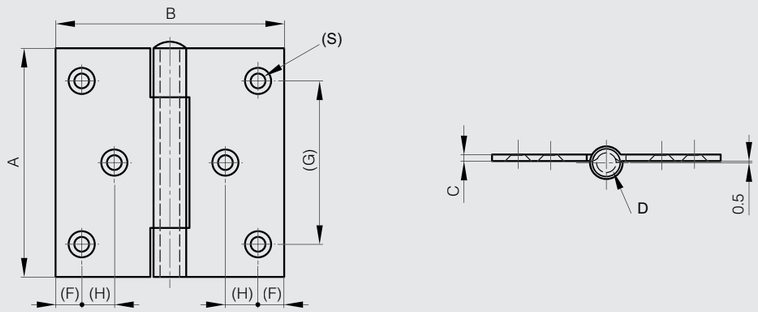

Square hinges with two offset leaves and riveted pin - with 4 holes

Riveted pin.

Part number	Material	Finish	A	B	C	D	F	G	S	Weight (g)
52-1-3609	304 stainless steel	raw	40	40	2	4	8	24	4	34
52-1-3611	304 stainless steel	raw	50	50	2	6	8	34	4.5	61
52-1-3613	304 stainless steel	raw	60	60	2	6	8	40	4.5	82
52-1-3872	316L stainless steel	raw	40	40	2	4	8	24	4	34
52-1-3709	316L stainless steel	raw	50	50	2	6	8	34	4.5	61
52-1-3873	316L stainless steel	raw	60	60	2	6	8	40	4.5	82

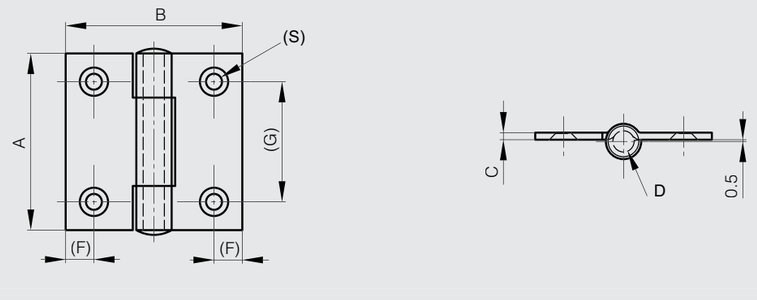

Square hinges with two offset leaves and riveted pin - with 6 holes

Riveted pin.

Part number	Material	Finish	A	B	C	D	F	G	H	S	Weight (g)
52-1-3615	304 stainless steel	raw	70	70	2	6	8	50	10	4.5	156
52-1-3617	304 stainless steel	raw	80	80	2.5	6	8	60	12.5	4.5	164

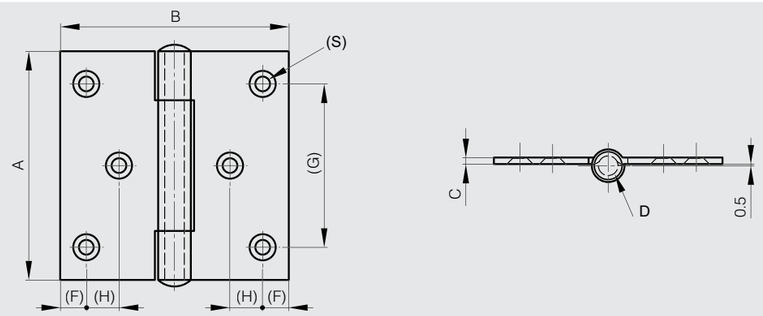

Square hinges with no offset leaf and riveted pin - no holes

Riveted pin.

Part number	Material	Finish	A	B	C	D	Weight (g)
50-1-3916	steel	raw	40	40	2	4	34
50-1-3917	steel	raw	50	50	2	6	61
50-1-3648	steel	raw	50	50	2.5	4.5	75
50-1-3918	steel	raw	60	60	2	6	82
50-1-3919	steel	raw	70	70	2	6	112
50-1-3920	steel	raw	80	80	2.5	6	168
50-1-3921	steel	raw	100	100	2.5	6	248
52-1-3679	304 stainless steel	raw	40	40	2	4	34
52-1-3694	304 stainless steel	raw	50	50	2	6	61
52-1-3695	304 stainless steel	raw	60	60	2	6	82
52-1-3864	304 stainless steel	raw	70	70	2	6	112
52-1-3865	304 stainless steel	raw	80	80	2.5	6	168
52-1-3866	304 stainless steel	raw	100	100	2.5	6	248
52-1-3869	316L stainless steel	raw	40	40	2	4	34
52-1-3870	316L stainless steel	raw	50	50	2	6	61
52-1-3871	316L stainless steel	raw	60	60	2	6	82

Square hinges with no offset leaf and riveted pin - with 4 holes

Riveted pin.

Part number	Material	Finish	A	B	C	D	F	G	S	Weight (g)
52-1-3861	304 stainless steel	raw	40	40	2	4	8	24	4	32
52-1-3862	304 stainless steel	raw	50	50	2	6	8	34	4.5	59
52-1-3863	304 stainless steel	raw	60	60	2	6	8	40	4.5	80
52-1-3874	316L stainless steel	raw	40	40	2	4	8	24	4	32
52-1-3710	316L stainless steel	raw	50	50	2	6	8	34	4.5	59
52-1-3875	316L stainless steel	raw	60	60	2	6	8	40	4.5	80

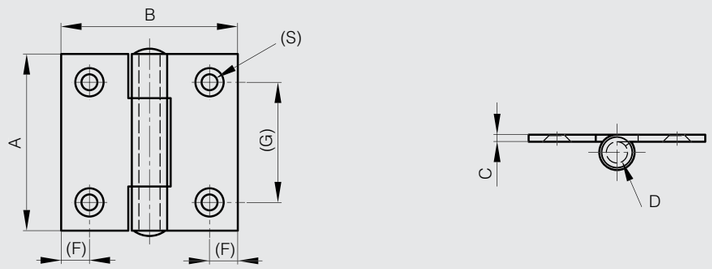

Square hinges with no offset leaf and riveted pin - with 6 holes

Riveted pin.

Part number	Material	Finish	A	B	C	D	F	G	H	S	Weight (g)
52-1-3867	304 stainless steel	raw	70	70	2	6	8	50	10	4.5	110
52-1-3868	304 stainless steel	raw	80	80	2.5	6	8	60	12.5	4.5	166

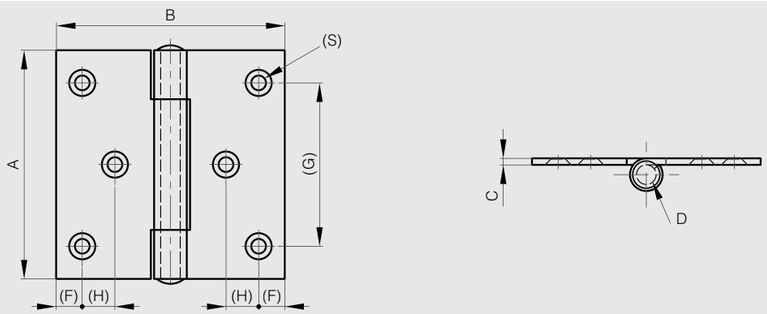

www.METALIKA-KACIN.com

Hinge 30 x 30 mm

Part number	Material	Finish	A	B	C	D	S	Weight (g)
52-1-4038	304 stainless steel	raw	30	30	0.8	2	3.3	8

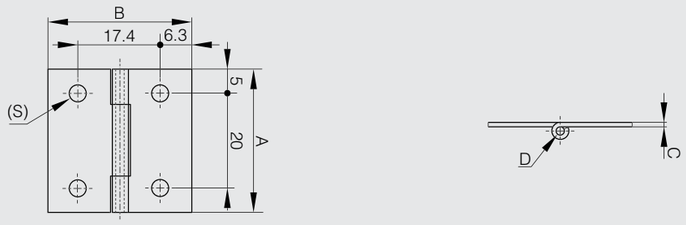

Hinge with nylon washers

Teflon plated pin in 304 stainless steel blocked with 2 punches.
4 nylon washers.

Part number	Material	Finish	A	B	C	D	E	F	G	S	Weight (g)
52-1-3790	304 stainless steel	raw	75	80	2	6	10.5	6	52	7.5	120

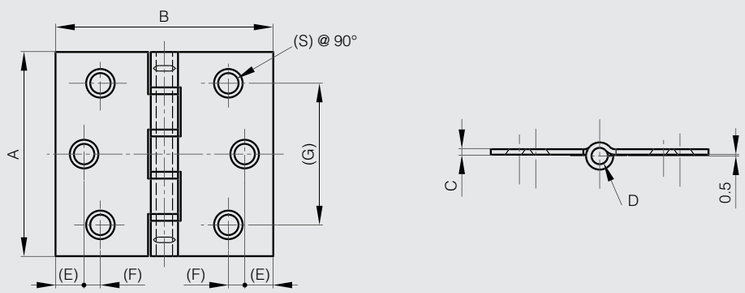

Hinge with oblong holes

Part number	Material	Finish	A	B	C	D	S	Weight (g)
50-1-3312	steel	zinc plated	65	70	2	4	6.7	81

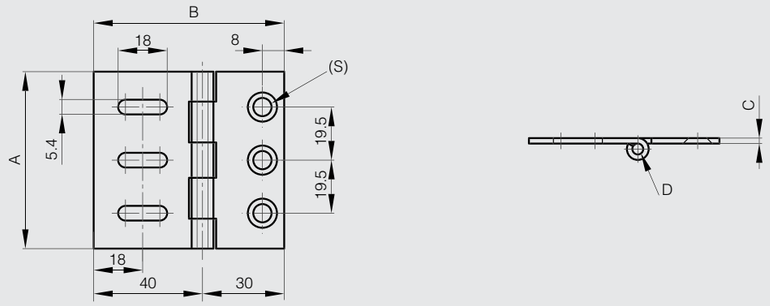

Aluminium profile hinges

180° ALU RoHS

This hinge has the same footprint and design as our friction, detent and spring hinges.
All are fully interchangeable.
Plastic pin with or without end caps.

Part number	Material	Finish	A	B	C	D	Note	Weight (g)
72-1-4212	6060 T5 alu	clear anodised	65	55	4.5	13	without cap	130
72-1-4213	6060 T5 alu	black anodised	65	55	4.5	13	without cap	130
72-1-4214	6060 T5 alu	clear anodised	65	55	4.5	13	with cap	130
72-1-4215	6060 T5 alu	black anodised	65	55	4.5	13	with cap	130

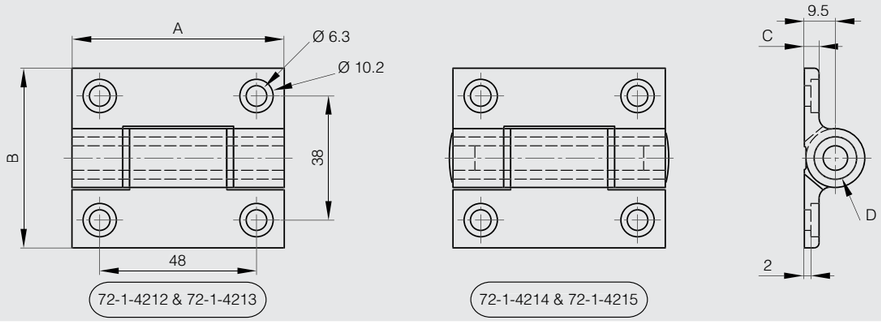

Heavy duty aluminium profile hinges

270° ALU RoHS

Free swinging hinge.
It has the same footprint and design as the spring hinge for heavy duty applications (part numbers: 72-1-4231, 72-1-4232, 72-1-4258 and 72-1-4259).
All are fully interchangeable.

Part number	Material	Finish	A	B	C	D	Weight (g)
72-1-4241	6082 T5 alu	clear anodised	100	82.5	5.5	24	148
72-1-4242	6082 T5 alu	black anodised	100	82.5	5.5	24	148

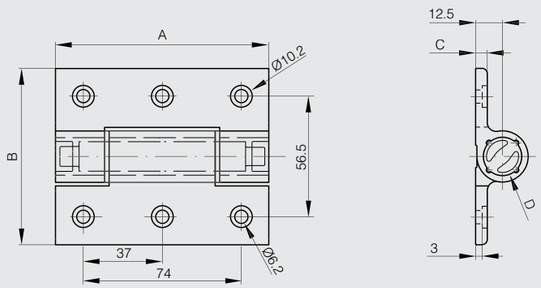

Aluminium hinges - 50 mm width

270° ALU RoHS

Hinge with 304 stainless steel riveted pin.

Part number	Material	Finish	A	B	C	D	Weight (g)
72-1-3635	6060 T5 alu	raw	32	50	3	5.2	20
72-1-3636	6060 T5 alu	raw	50	50	3	5.2	30

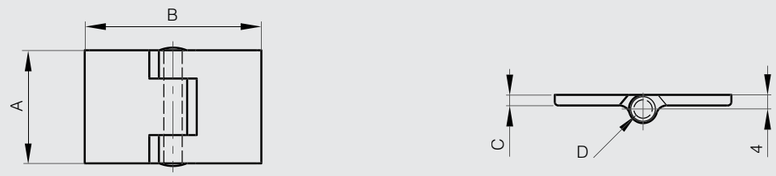

Aluminium hinges with reversed leaves - 50 mm width

270° ALU RoHS

Hinge with 304 stainless steel riveted pin.

Part number	Material	Finish	A	B	C	D	Weight (g)
72-1-3637	6060 T5 alu	raw	32	50	3	5.2	20
72-1-3638	6060 T5 alu	raw	50	50	3	5.2	30

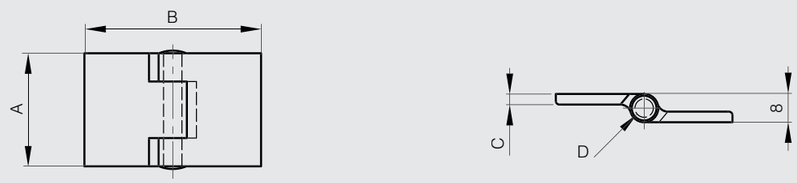

www.METALIKA-KACIN.com

Clean room hinge 65 x 60 mm

270° ALU RoHS

No metal-to-metal contact. Polyacetal bushings minimize particles.
Door size: max. W600 x L800.
Door weigh: max. 13 kg/pair.
303 stainless steel pin.

Part number	Material	Finish	A	B	C	D	E	S	Weight (g)
72-7-4252	aluminium	anodised	65	60	3.5	5	8	5.5	50

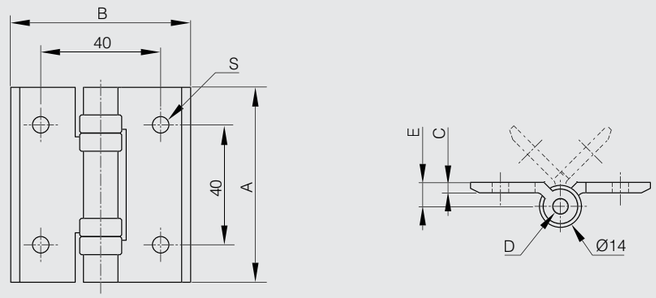

Clean room hinge 100 x 60 mm

270° ALU RoHS

No metal-to-metal contact. Polyacetal bushings minimize particles.
Door size: max. W600 x L800.
Door weight: max. 13 kg/pair.
303 stainless steel pin.

Part number	Material	Finish	A	B	C	D	E	S	Weight (g)
72-7-4253	aluminium	anodised	100	60	3.5	5	8	5.5	78

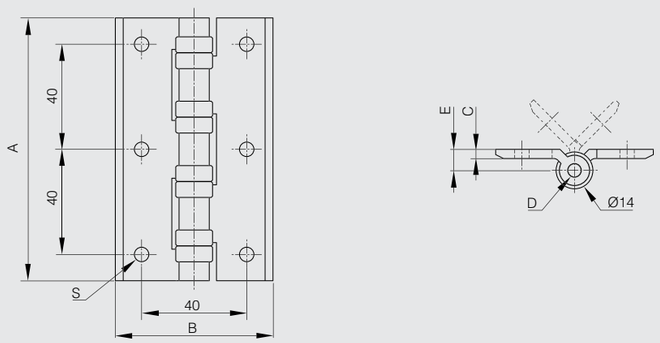

Hinge 50 x 30 mm

270° STAINLESS STEEL RoHS

Drilled hinge with riveted pin.

Part number	Material	Finish	A	B	C	D	F	G	S	Weight (g)
52-1-3571	304 stainless steel	raw	50	30	1	3	6.5	35	3.5	16

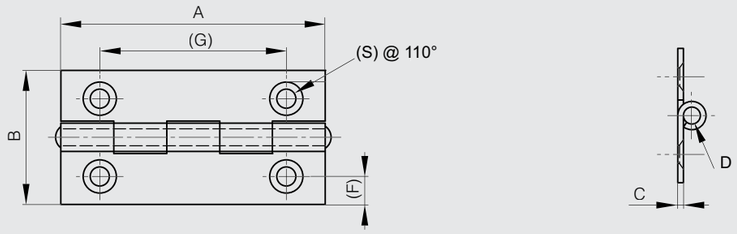

Hinges 50 x 40 mm

270° STAINLESS STEEL STEEL RoHS

Available in 2 versions: with holes or countersunk holes

Part number	Material	Finish	A	B	C	D	F	G	S	Note	Weight (g)
50-1-3525	steel	zinc plated	50	40	1.2	2.7	8.5	36	5	drilled	24
50-1-3526	steel	zinc plated	50	40	1.2	2.7	8.5	36	5	countersunk version	24
52-1-3592	304 stainless steel	raw	50	40	1.2	3	8.5	36	5	countersunk version	24
52-1-3607	304 stainless steel	raw	50	40	1.2	3	8.5	36	5	drilled	24

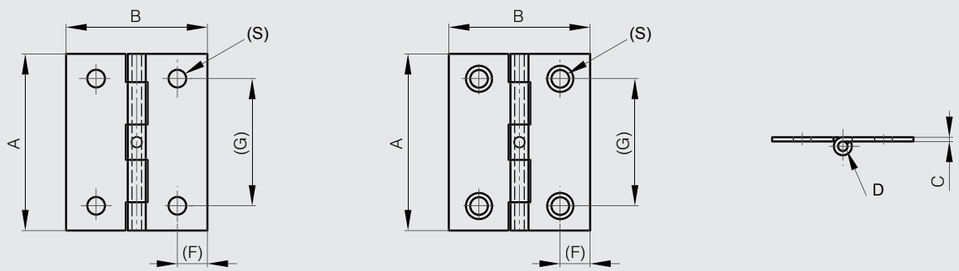

www.METALIKA-KACIN.com

Hinges 60 x 35 mm

Part number	Material	Finish	A	B	C	D	S	Note	Weight (g)
52-1-4009	304 stainless steel	raw	60	35	1	2	4	countersunk version	20
52-1-4051	304 stainless steel	raw	60	35	1	2	4	drilled	20

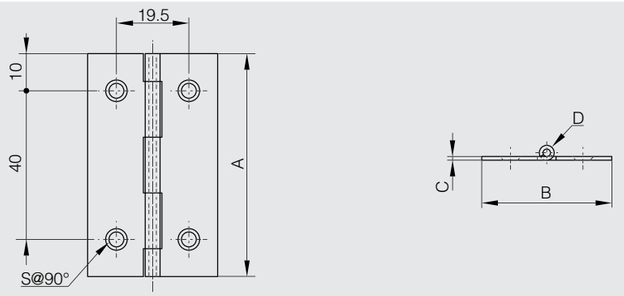

Hinge 62 x 44 mm

Part number	Material	Finish	A	B	C	D	Weight (g)
50-1-3309	steel	raw	62	44	2	4.9	48

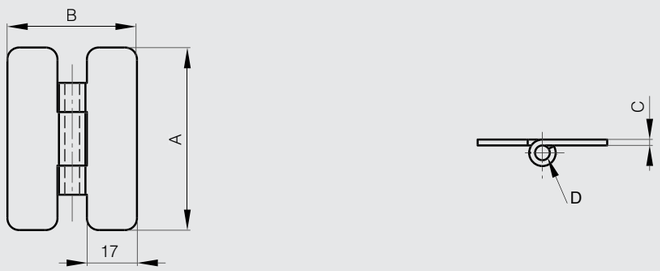

Hinge 75 x 40 mm

Part number	Material	Finish	A	B	C	D	E	F	G	Weight (g)
52-1-3990	304 stainless steel	raw	75	40	1.5	3	6	7.5	48	40

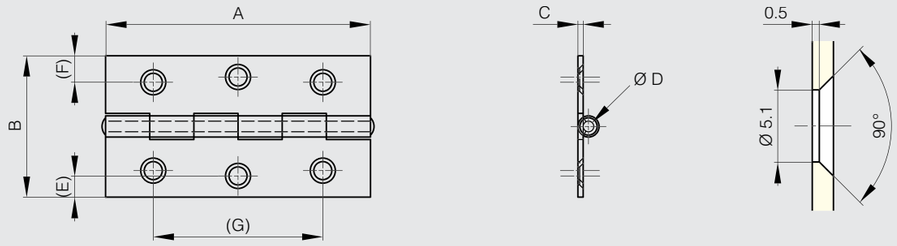

Small hinges with 4 knuckles

Only part number 50-7-3558 has a headed pin.

Part number	Material	Finish	A	B	C	D	F	G	S	Note	Weight (g)
50-7-3618	steel	raw	30	19	0.8	2.4				undrilled	5.6
50-7-3617	steel	raw	30	19	0.8	2.4	4	19	2	drilled	5.5
50-7-3557	steel	raw	35	22	0.8	2.4				undrilled	7.5
50-7-3549	steel	raw	35	22	0.8	2.4	4	22	3.5	drilled	7
50-7-3558	steel	raw	40	25	0.9	2.7				undrilled headed pin	10.2
50-7-3550	steel	raw	40	25	0.9	2.7	4.5	27	3.2	drilled	10
50-7-3559	steel	raw	50.3	29.8	1	2.4				undrilled	15.5
50-7-3551	steel	raw	50.3	29.8	1	2.4	7.2	35.2	2.5	drilled	15

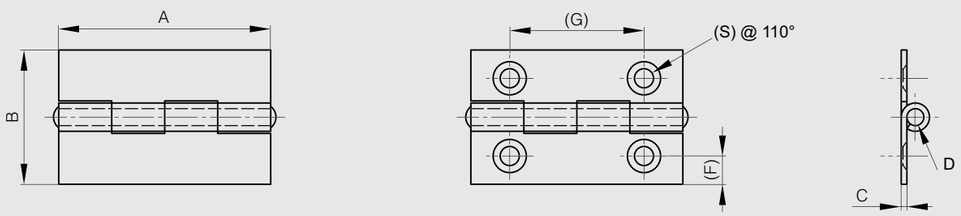

www.METALIKA-KACIN.com

Rectangular hinges

Small hinges with 6 knuckles

All hinges have headed pins except 50-7-3552, 50-7-3553, 50-7-3561.

270° STEEL RoHS

Part number	Material	Finish	A	B	C	D	F	G	S	Note	Weight (g)
50-7-3560	steel	raw	60	35	1	3				undrilled / headed pin	23
50-7-3552	steel	raw	60	35	1	3	8	44	2.5	drilled	22.5
50-7-3561	steel	raw	70	39.5	1	4				undrilled	40
50-7-3553	steel	raw	70	41.5	1	3.5	8.7	52	3	drilled	39
50-7-3562	steel	raw	80	45	1.2	3.9				undrilled / headed pin	48
50-7-3554	steel	raw	80.5	45.4	1	3.5	9.6	59.3	4	drilled / headed pin	47
50-7-3564	steel	raw	100	50	1.5	4.9				undrilled / headed pin	86
50-7-3556	steel	raw	100	50	1.5	4.9	10	77	5.5	drilled / headed pin	85

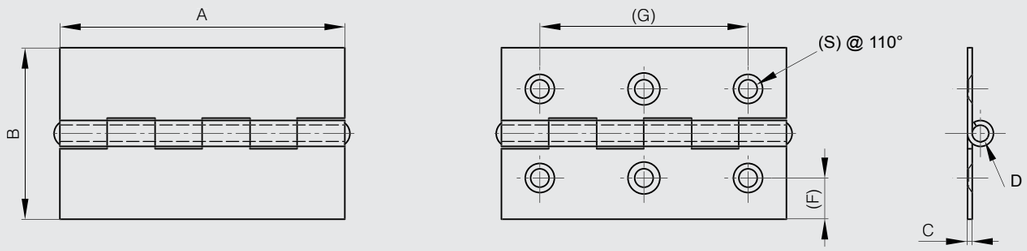

Hinge 100 x 84 mm

304 stainless steel riveted pin.

270° STEEL RoHS

Part number	Material	Finish	A	B	C	D	S	Weight (g)
50-1-4174	steel	zinc plated	100	84	3	6	5.5	250

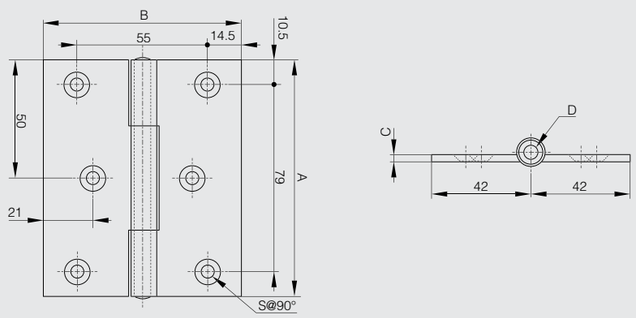

www.METALIKA-KACIN.com

Cranked hinges

Small butt hinge with one cranked leaf 38 mm

304 stainless steel headed pin.

270° BRASS RoHS

Part number	Material	Finish	A	B	C	D	E	S	Weight (g)
63-1-3301	brass	chrome plated	38	16.5	1.5	3	16.5	4	29

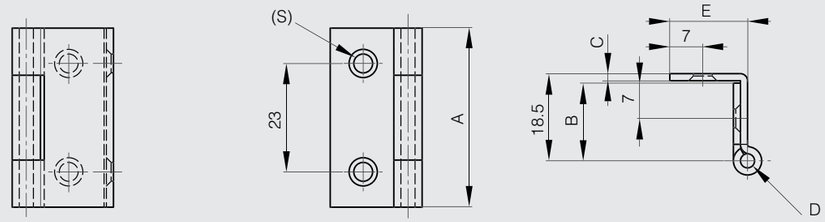

Small butt hinges with one cranked leaf and removable pin 38 mm

Removable pin.

180° STEEL RoHS

Part number	Material	Finish	A	B	C	D	E	F	G	H	J	K	S	Pin material	Weight (g)
60-1-3331	steel	chrome plated	38	19	1.5	3	17	8	23	26	7	3.5	4	nickel plated steel	31
60-1-3332	steel	chrome plated	38	19	1.5	3	19	10	24.5	18	7.5	4	4.7	nickel plated steel	31
60-1-3330	steel	chrome plated	38	19	1.5	3	21	10	22.5	18	7.5	4	4.7	nickel plated steel	31
60-1-3342	steel	black cataphoresis	38	19	1.5	3	21	10	22.5	18	7.5	4	4.7	raw steel	31

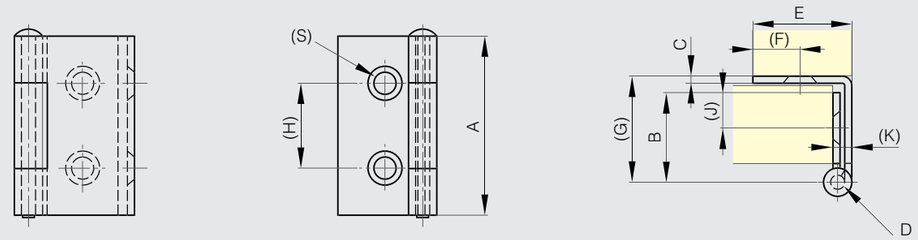

www.METALIKA-KACIN.com

Small butt hinges with one cranked leaf 38 mm

Part number	Material	Finish	A	B	C	D	E	F	G	S	Pin material	Weight (g)
60-1-3525	steel	chrome plated	38	7	1.5	3	18	27	21	4.5	304 stainless steel	24
60-1-3327	steel	chrome plated	38	11	1.5	3	14	27	17	4.5	304 stainless steel	24
60-1-3329	steel	nickel plated	38	11	1.5	3	14	27	17	4.5	304 stainless steel	24
60-1-3797	steel	black zinc plated	38	11	1.5	3	14	27	17	4.5	304 stainless steel	24
62-1-3628	316L stainless steel	raw	38	15	1.5	3	14	31	17	4.5	316L stainless steel	24

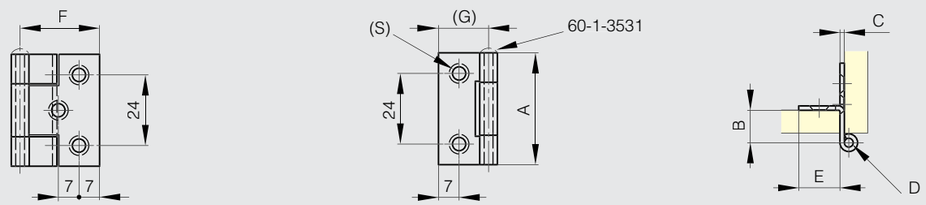

Small butt hinge with one cranked leaf 50 mm

304 stainless steel pin.
For door thickness max. 11 mm.

Part number	Material	Finish	A	B	C	D	E	S	Weight (g)
62-1-3300	430 stainless steel	polished	50	28.5	1	3	12	4	20

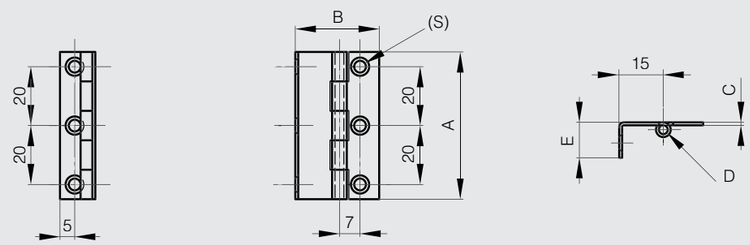

Small butt hinge with one cranked leaf and removable pin 50 mm

Removable pin.
Door thickness: max. 20 mm.

Part number	Material	Finish	A	B	C	D	E	S	Weight (g)
62-1-3301	430 stainless steel	polished	50	44.8	1.2	3	19	4.8	33

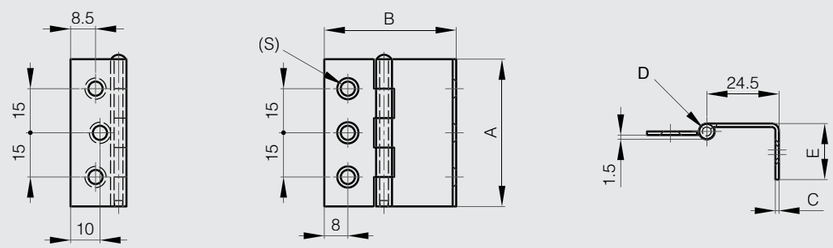

Small butt hinge with one cranked leaf 60 mm

The same hinge is available with a spring (part number 71-1-3622).

Part number	Material	Finish	A	B	C	D	S1	S2	Weight (g)
62-1-3625	316L stainless steel	brightened	60	30	1.5	3	4.2	5	40

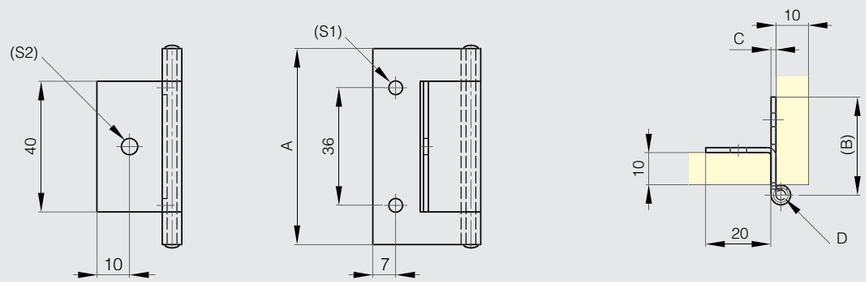

www.METALIKA-KACIN.com

Small butt hinge with one cranked leaf 66 mm

180° STAINLESS STEEL RoHS

The same hinge is available with a spring (part number 71-1-3649).
Pin in 316 stainless steel.

Part number	Material	Finish	A	B	C	D	S	Weight (g)
62-1-3637	316 stainless steel	brightened	66	22.5	1.5	4	4	310

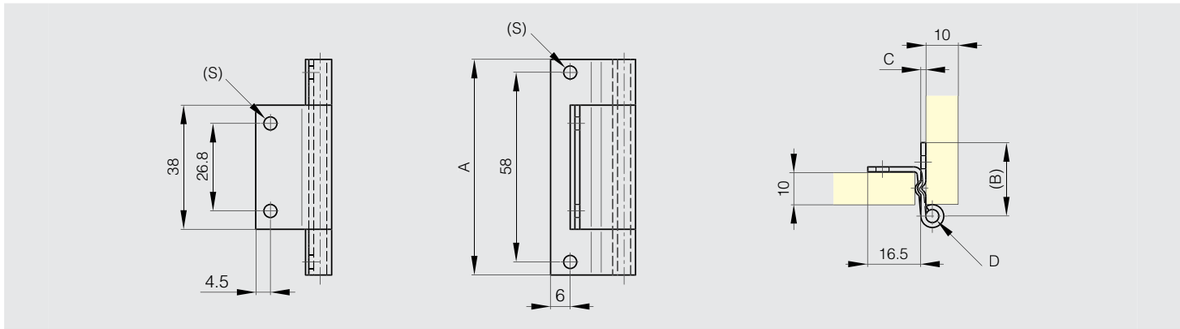

Small butt hinge with two cranked leaves and removable pin 38 x 18.5 mm

270° BRASS RoHS

304 stainless steel removable pin.

Part number	Material	Finish	A	B	C	D	E	S	Weight (g)
63-1-3300	brass	chrome plated	38	15	1.5	3	14	4	36

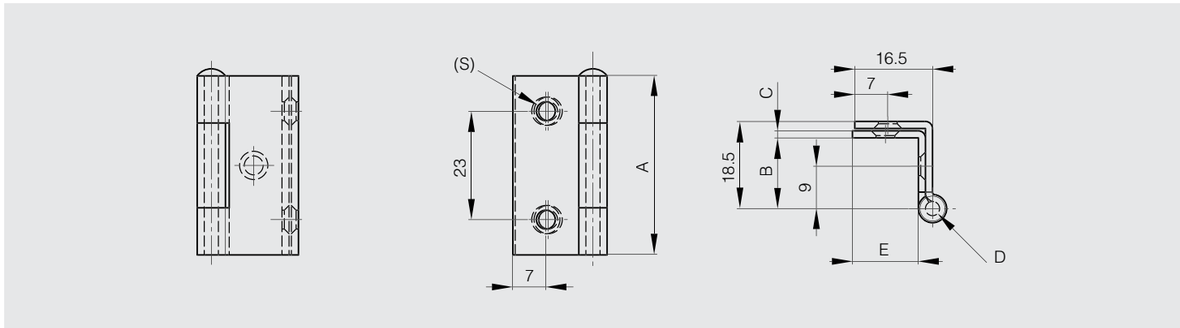

Stainless steel hinge with removable pin

270° STAINLESS STEEL RoHS

Removable pin.

Part number	Material	Finish	A	B	C	D	Weight (g)
52-1-3877	304 stainless steel	brightened	60	94.5	1.5	4	50

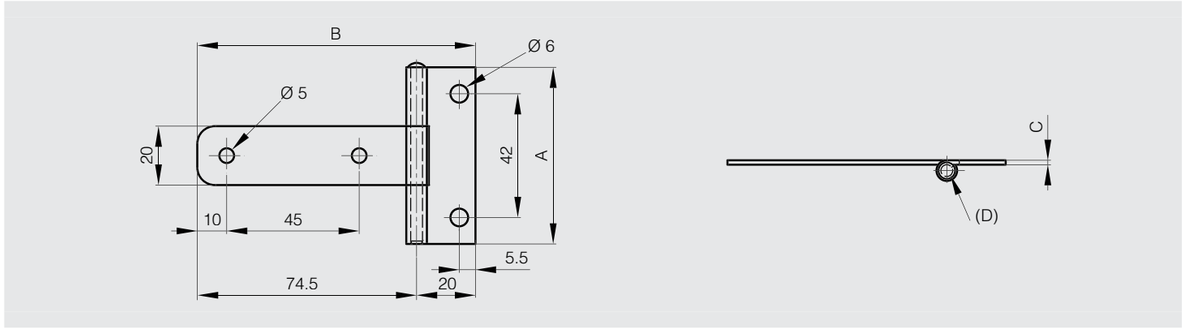

Removable pin hinges with nylon washers

270° STAINLESS STEEL STEEL RoHS

Nylon washers.

Part number	Material	Finish	A	B	C	D	E	S	Note	Weight (g)
50-1-3315	steel	raw	112	136.5	2.5	5	63.5		undrilled	244
52-1-3605	304 stainless steel	raw	112	136.5	2.5	5	63.5		undrilled	248
52-1-3606	304 stainless steel	raw	112	136.5	2.5	5	63.5	7	drilled	248

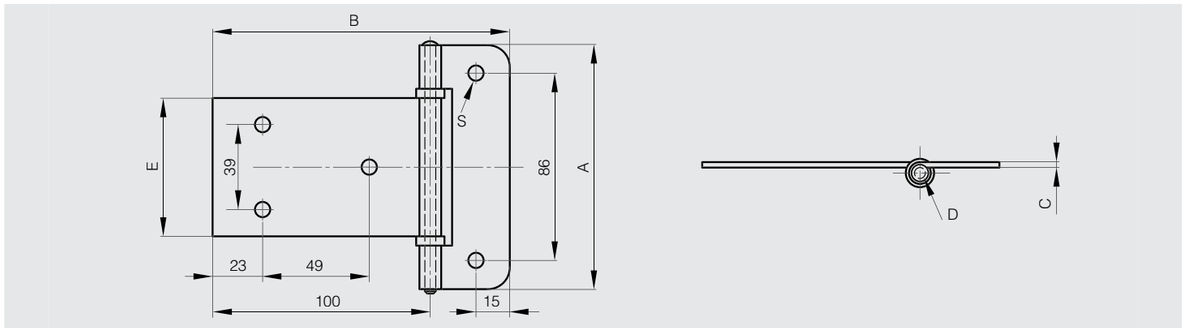

www.METALIKA-KACIN.com

Hinges 62 x 74 mm

270° STAINLESS STEEL STEEL RoHS

Part number	Material	Finish	A	B	C	D	Weight (g)
50-1-3308	steel	raw	62	74	2	4.9	54
52-1-3769	304 stainless steel	raw	62	74	2	4.9	54

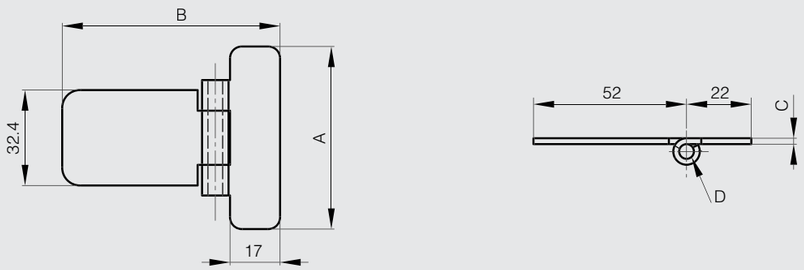

Hinge 20 x 65 mm

270° STAINLESS STEEL RoHS

Part number	Material	Finish	A	B	C	D	S	Weight (g)
52-1-4013	304 stainless steel	raw	20	65	1	2	4	11

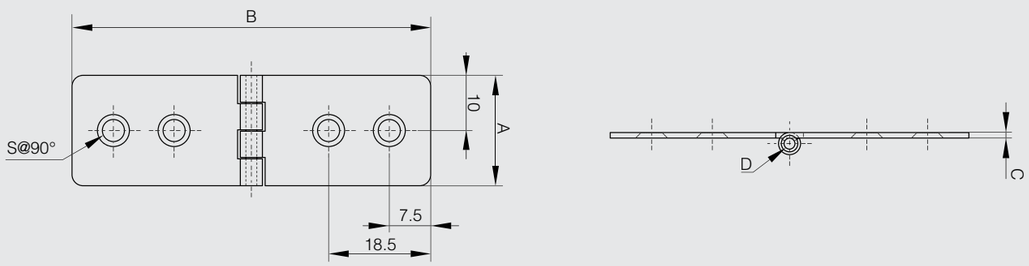

Hinges 20 x 77mm and 22 x 120 mm

270° STEEL RoHS

Part number	Material	Finish	A	B	C	D	E	F	S	Weight (g)
50-7-3736	steel	raw	20	77	1.2	3	10	16	3.2	22
50-7-3737	steel	raw	22	120	1.5	5	13.5	30	4.6	36

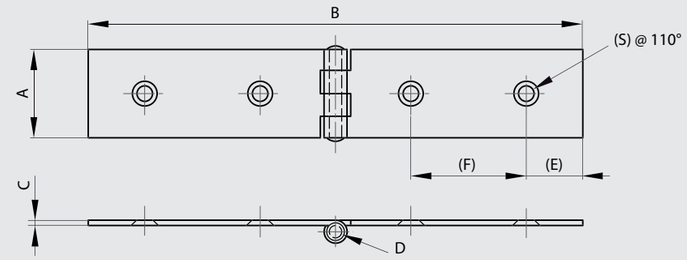

Hinge 25 x 140 mm

270° STEEL

Part number	Material	Finish	A	B	C	D	E	F	S	Note	Weight (g)
50-7-3880	steel	raw	25	140	1.5	3.5	11	46	3.5	riveted pin	45

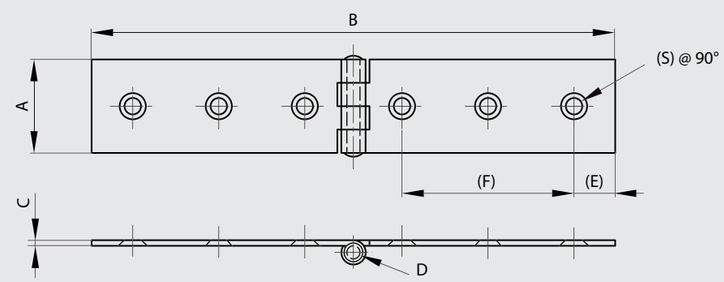

www.METALIKA-KACIN.com

Hinges 30 x 140 mm

Available drilled or undrilled depending on part numbers.

270° STEEL

Part number	Material	Finish	A	B	C	D	E	F	S	Note	Weight (g)
50-7-3343	steel	raw	30	140	2.5	6				undrilled	95
50-7-3339	steel	zinc plated	30	140	2.5	6	12.5	35	5.2	drilled	95

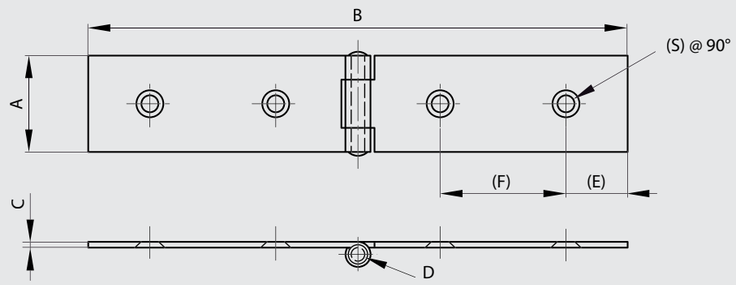

Hinge 30 x 83 mm

270° STEEL RoHS

Part number	Material	Finish	A	B	C	D	S	Weight (g)
50-1-3313	steel	nickel plated	30	83	1.5	3.4	5.5	30

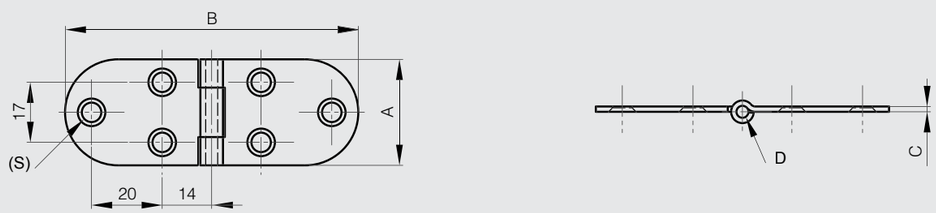

www.METALIKA-KACIN.com

Zinc die-cast hinges 30 mm long

Nickel plated steel pin.

180° ZAMAK RoHS

Part number	Material	Finish	A	B	C	D	E	Weight (g)
72-1-9006	zinc die-cast	black	30	27.5	13	5	14.5	60
72-1-9007	zinc die-cast	black	30	22	13	5	9	42

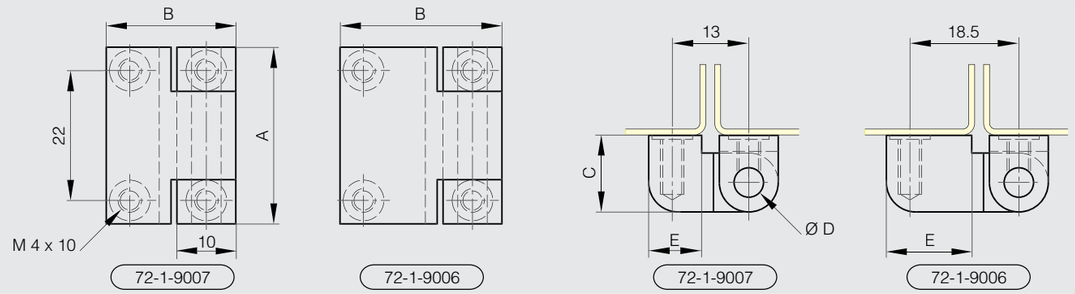

Zinc die-cast hinge 60 mm long

Nickel plated steel pin.

180° ZAMAK RoHS

Part number	Material	Finish	A	B	C	D	E	Weight (g)
72-1-9005	zinc die-cast	black	60	35	18	7	18	170

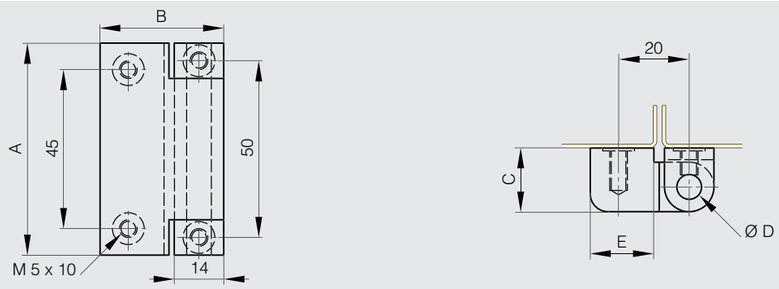

www.METALIKA-KACIN.com

Zinc die-cast hinge 90 x 60 mm

Nickel plated steel pin.

Part number	Material	Finish	A	B	C	D	Weight (g)
72-1-9011	zinc die-cast	black	90	60	8	8	305

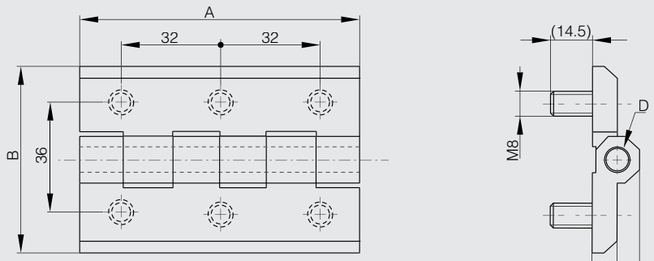

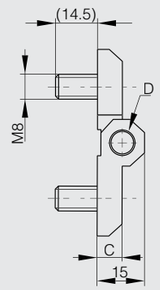

www.METALIKA-KACIN.com

Zinc die-cast pin hinge for surface mounted door A

Nylon washer.

Part number	Material	Finish	A	B	C	Weight (g)
72-1-9004	zinc die-cast	black	64	17.5	15	76

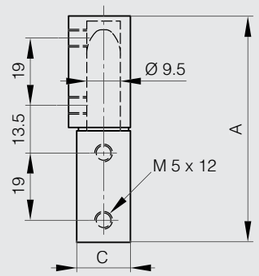

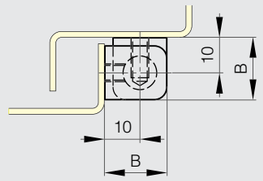

www.METALIKA-KACIN.com

Zinc die-cast pin hinge for surface mounted door B

For M5 screw.

Part number	Material	Finish	A	B	C	Weight (g)
72-7-4168	zinc die-cast	black	63.5	17.5	15.1	80

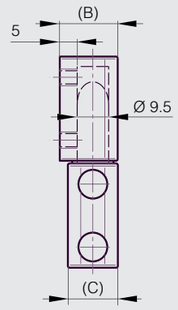

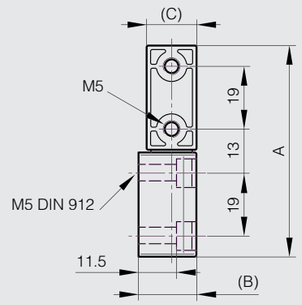

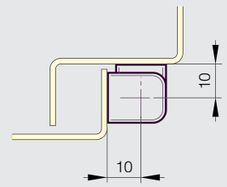

Zinc die-cast lift-off hinges 25.5 mm

Nylon washer.

Part number	Material	Finish	A	B	C	Note	Weight (g)
72-1-4206	zinc die-cast	black	25.5	20.5	10	type 2	30
72-1-4207	zinc die-cast	black	25.5	20.5	10	type 1	30

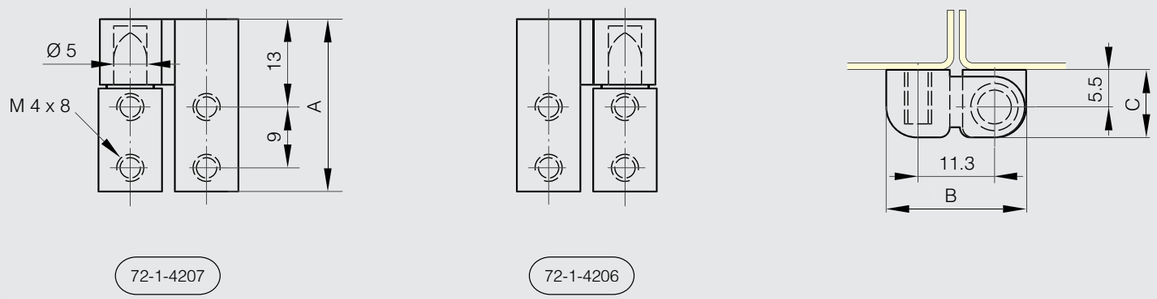

Zinc die-cast lift-off hinges 64 x 33 mm

Nylon washer.

Part number	Material	Finish	A	B	C	Note	Weight (g)
72-1-9000	zinc die-cast	black	64	33	17.5	type 2	140
72-1-9001	zinc die-cast	black	64	33	17.5	type 1	140

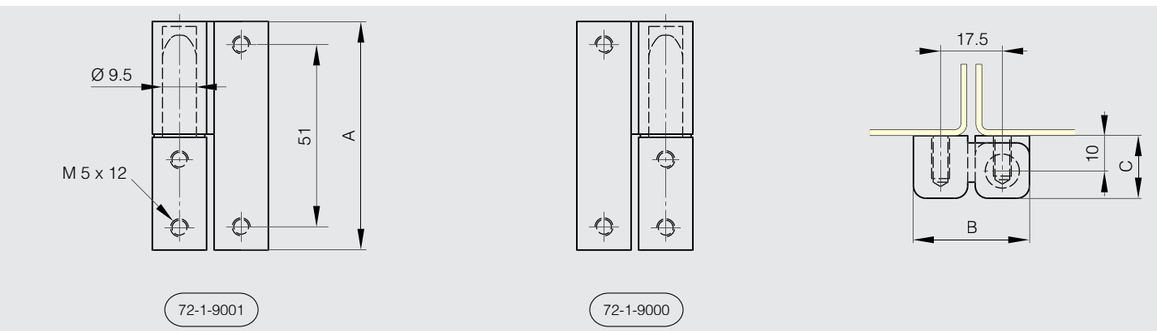

Various hinges
www.metalika-kacin.com
Zinc die-cast hinges

Zinc die-cast lift-off hinges 64 x 50 mm

Nylon washer.
Steel pin.

Part number	Material	Finish	A	B	C	Note	Weight (g)
72-1-9002	zinc die-cast	black	64	50	17.5	type 2	230
72-1-9003	zinc die-cast	black	64	50	17.5	type 1	230

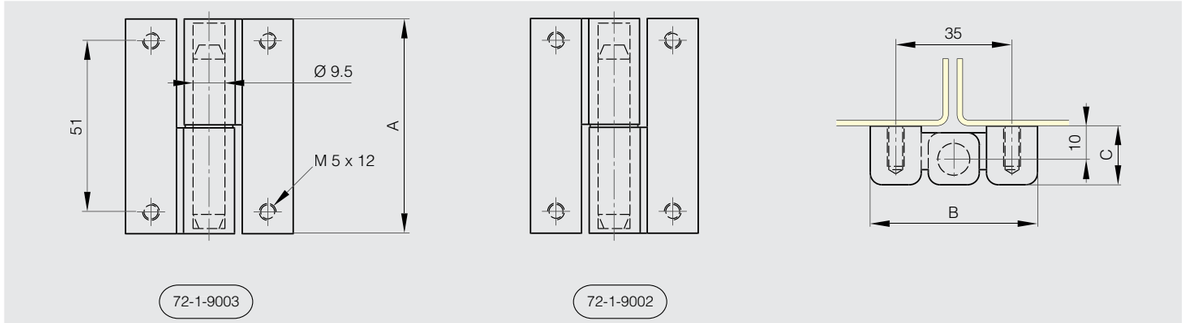

Zinc die-cast lift-off hinges 80 mm

Fixing by 2 threaded studs. Stainless steel pin.
Leaves blocked with grub screw. Unscrew it to get a ligt-off hinge.

Part number	Material	Finish	A	B	C	D	G	Note	Weight (g)
14-7-3813	zinc die-cast	black	80	65	8	8	60	type 2	330
14-7-3814	zinc die-cast	black	80	65	8	8	60	type 1	330

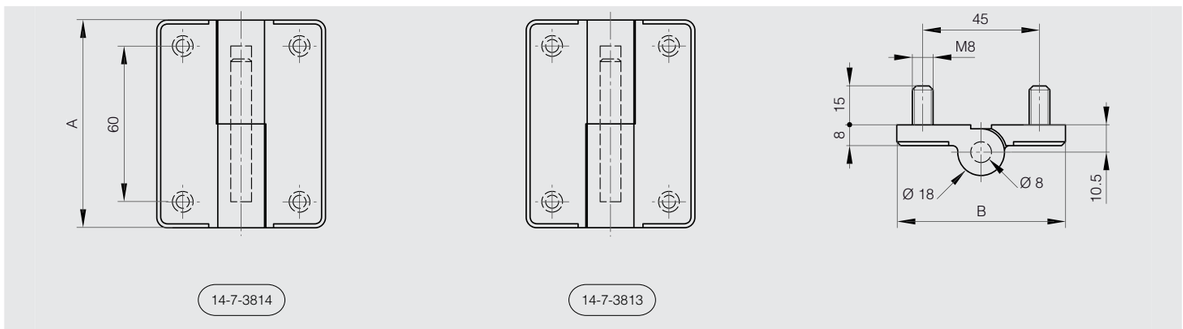

Profilscharniere aus Aluminium

Mat.:
Scharnierlappen: AlMgSio,5
Scharnierstift : VA (1.4301)

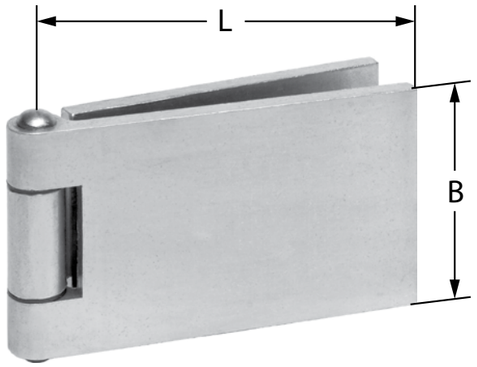

Art.-Nr.	B x L	Stärke	Stift-Ø
02000/81	60 x 80 mm	6 mm	8 mm
02000/82	80 x 100 mm	6 mm	8 mm
02000/83	60 x 120 mm	6 mm	8 mm
02000/87	80 x 100 mm	6 mm	8 mm

www.METALIKA-KACIN.com

Hinge 40x40 Pr01 180°

[4-246]

Advantages

- Screw-on Hinge 40x40mm with molded in countersunk screws M5.
- Lift-off.
- The O-Rings for IP65 DIN EN 60529 are included.
- RH and LH version.
- 180° Opening angle.

Materials

- **Hinge halves:** zinc die, black
- **Pin:** stainless steel
- **O-Ring:** NBR
- **Washer:** stainless steel

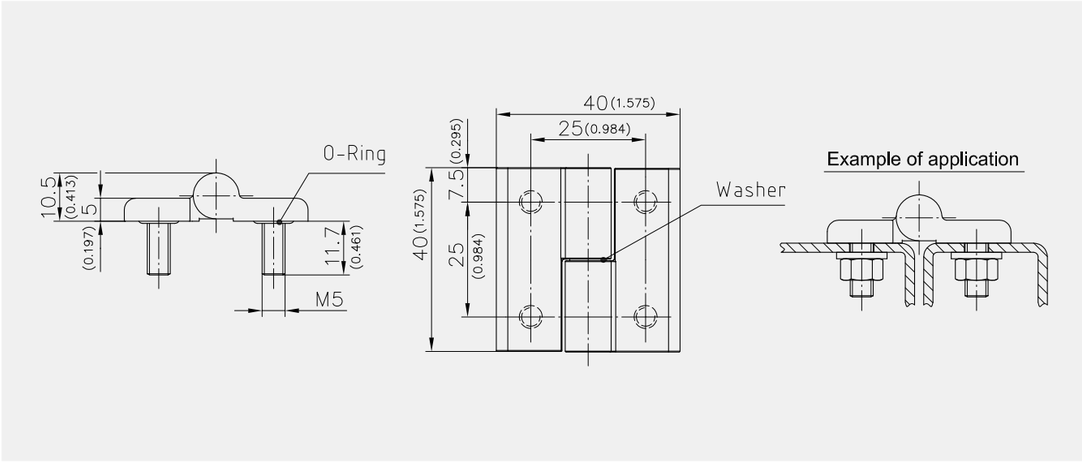

Hinge

Part Number	Version	Pin version	Material pin	Installation type
218-9010.00-00000	RH	pressed in	stainless steel	screw-on
218-9011.00-00000	LH	pressed in	stainless steel	screw-on

Hinges
www.METALIKA-KACIN.com

DST Hinge 40x40 Pr01 180°

[4-246DST]

Advantages

- For nested doors.
- Hinge visible.
- RH and LH version.
- 180° Opening angle.
- Lift-off.
- The O-rings for IP65 DIN EN 60529 are included.
- Tool-less installation / screw-on.

Materials

- **Hinge halves:** zinc die, black
- **Pin:** stainless steel
- **O-rings:** NBR
- **Snap-wedges:** sintered steel, zinc plated
- **Washer:** stainless steel

Remarks

1. washer
2. o-ring

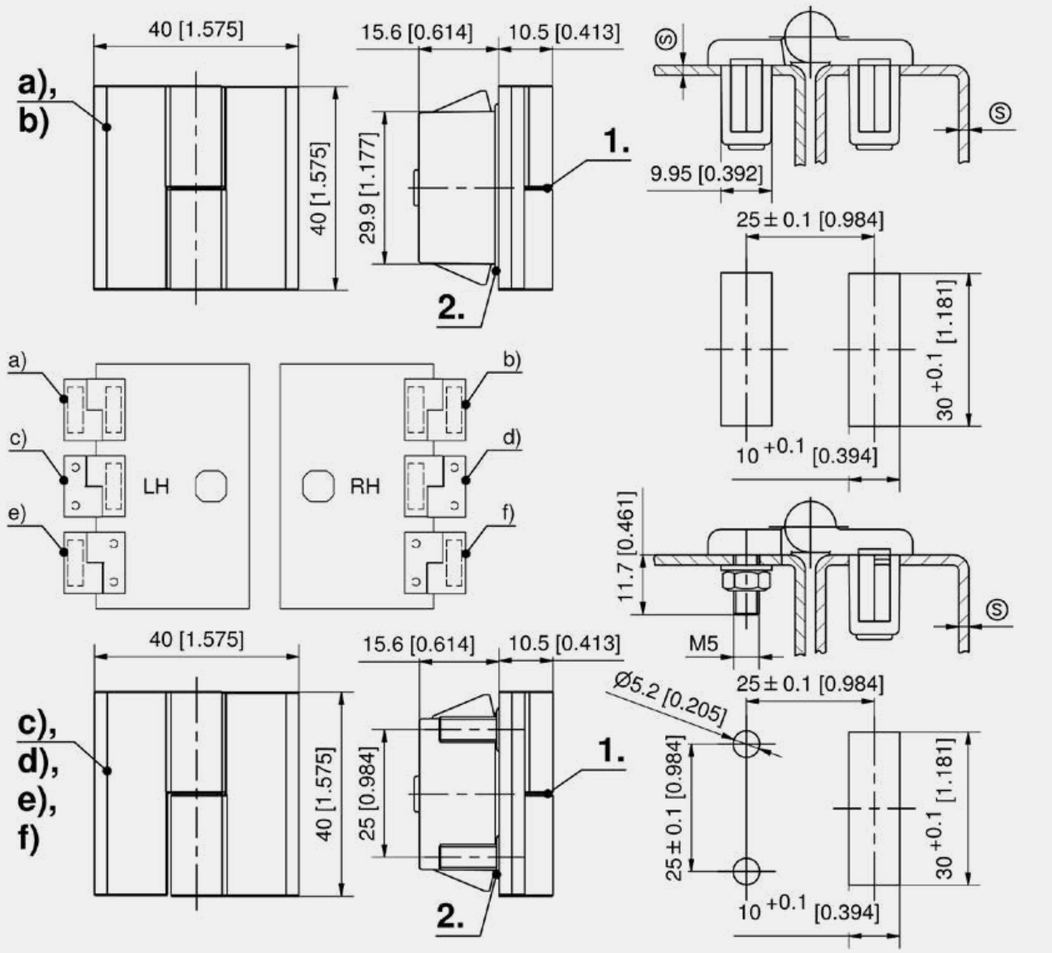

Hinge 40x40 Pr01 180°

[4-250]

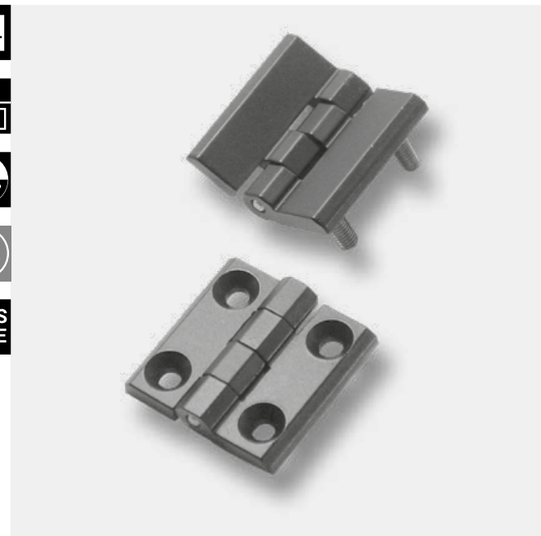

Advantages

- Screw-on Hinge with or without grounding.
- RH or LH application.
- 180° Opening angle.
- Combination of versions a) and b) on request.

Materials

- **Hinge halves:** zinc die, chrome plated or black
- **Pin:** stainless steel
- **Molded in screws:** steel, zinc plated
- **Grounding washer:** steel, zinc plated
- **Spring:** spring steel

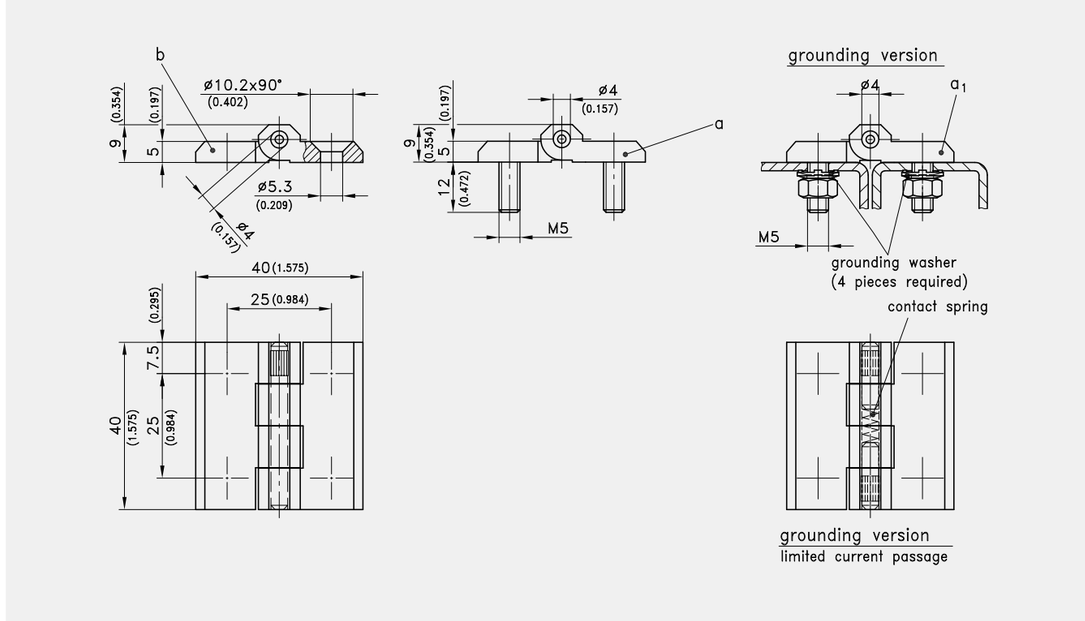

Hinge, zinc die, chrome plated

	Part Number	Version	Material pin	Pin version	Installation type
a)	218-9001.00-00000	with molded in screws M5	stainless steel	pressed in	screw-on
b)	218-9003.00-00000	for countersunk screws M5	stainless steel	pressed in	screw-on

Hinge, zinc die, black

	Part Number	Version	Grounding type	Material pin	Pin version	Installation type
a)	218-9002.00-00000	with molded in screws M5		stainless steel	pressed in	screw-on
a1)	218-9402.00-00000	with molded in screws M5	Grounding washer	steel, zinc plated	pressed in	screw-on
b)	218-9004.00-00000	for countersunk screws M5		stainless steel	pressed in	screw-on

Accessories
861-0176.07-00005 **Grounding washer**

www.METALIKA-KACIN.com

Hinge 50x50 Pr01 180°

[4-260]

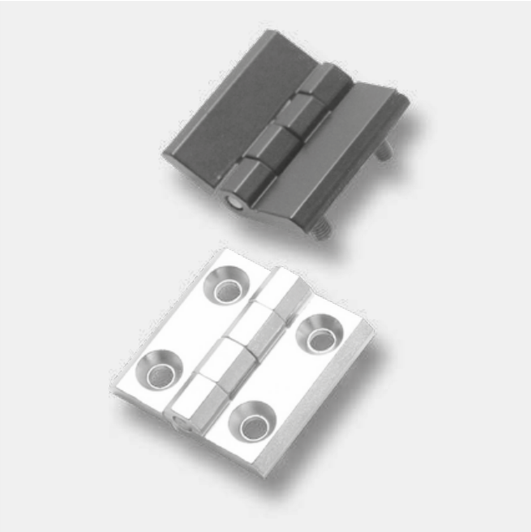

Advantages

- Screw-on Hinge with or without grounding.
- RH or LH application.
- 180° Opening angle.
- Combination of versions a) and b) on request.

Materials

- **Hinge halves:** zinc die, chrome plated or black
- **Pin:** stainless steel
- **Molded in screws:** steel, zinc plated
- **Grounding washer:** steel, zinc plated
- **Spring:** spring steel

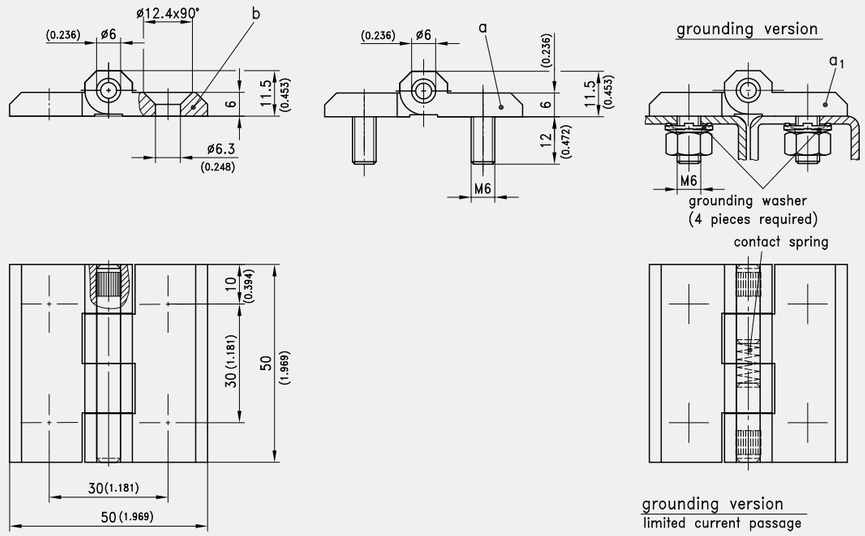

Hinge, zinc die, chrome plated

	Part Number	Version	Material pin	Pin version	Installation type
a)	218-9101.00-00000	with molded in screws M6	stainless steel	pressed in	screw-on
b)	218-9103.00-00000	with countersunk holes M6	stainless steel	pressed in	screw-on

Hinge, zinc die, black

	Part Number	Version	Grounding type	Material pin	Pin version	Installation type
a)	218-9102.00-00000	with molded in screws M6		stainless steel	pressed in	screw-on
a1)	218-9412.00-00000	with molded in screws M6	Grounding washer	steel, zinc plated	pressed in	screw-on
b)	218-9104.00-00000	with countersunk holes M6		stainless steel	pressed in	screw-on

+	Accessories
	800-0411.00-00000 **Grounding washer**

www.METALIKA-KACIN.com

Hinge 76x50 Pr01 270°

[4-262]

for nested door

Advantages

- Screw-on hinge.
- RH or LH application.
- Version b) allows application around corner.
- Combination of versions a) and b) on request.
- 270° Opening angle.

Materials

- **Hinge halves:** zinc die, chrome plated or black
- **Pin:** stainless steel
- **Molded in screws:** steel, zinc plated

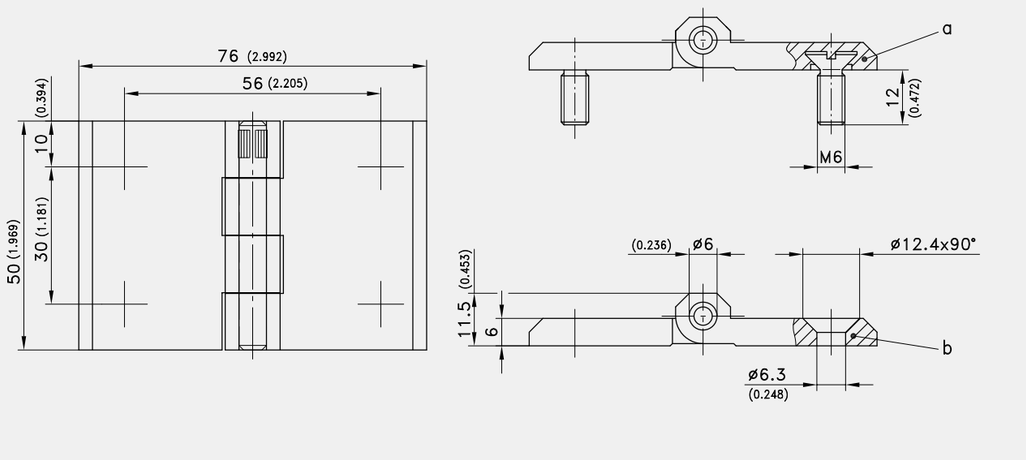

Hinge, zinc die, chrome plated

	Part Number	Version	Material pin	Pin version	Installation type
a)	218-9105.00-00000	with molded in screws M6	stainless steel	pressed in	screw-on
b)	218-9107.00-00000	for M6 countersunk screws	stainless steel	pressed in	screw-on

Hinge, zinc die, black

	Part Number	Version	Material pin	Pin version	Installation type
a)	218-9106.00-00000	with molded in screws M6	stainless steel	pressed in	screw-on
b)	218-9108.00-00000	for M6 countersunk screws	stainless steel	pressed in	screw-on

www.METALIKA-KACIN.com

Hinge 63x50 Pr01 270°

[4-264]

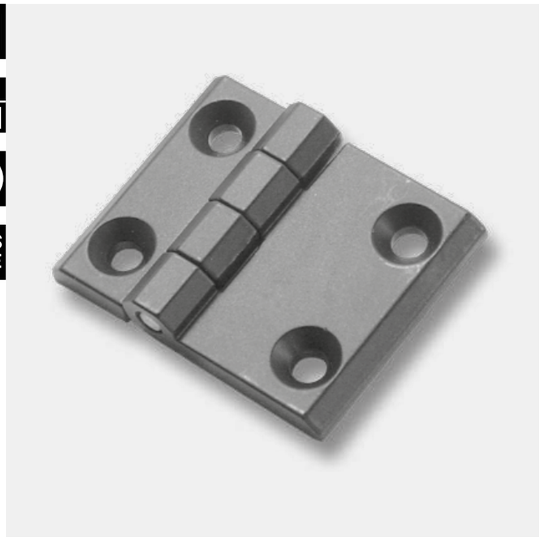

for nested door

Advantages

- Screw-on hinge.
- RH or LH application.
- 270° Opening angle.

Materials

- **Hinge halves:** zinc die, chrome plated or black
- **Pin:** stainless steel
- **Molded in screws:** steel, zinc plated

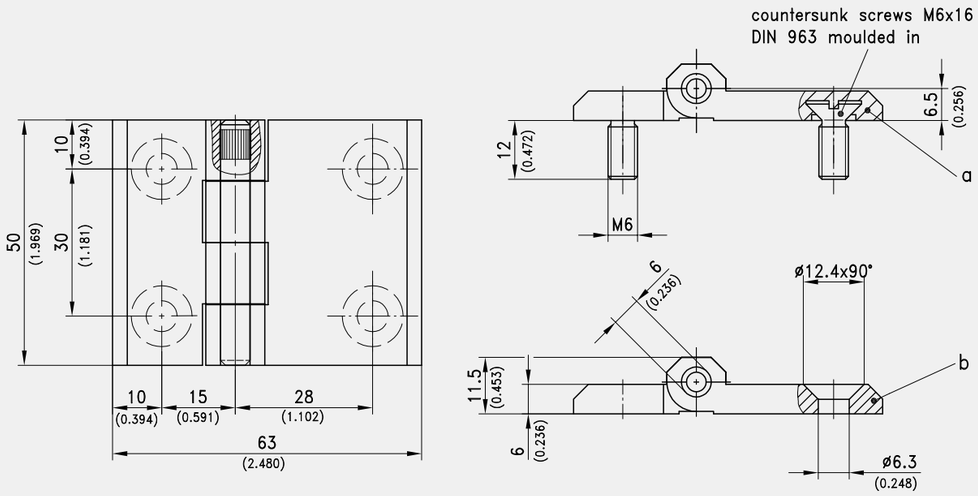

Hinge, zinc die, chrome plated

	Part Number	Version	Material pin	Pin version	Installation type
b)	218-9109.00-00000	with countersunk holes for M6	stainless steel	pressed in	screw-on
a)	218-9124.00-00000	molded in screws	stainless steel	pressed in	screw-on

Hinge, zinc die, black

	Part Number	Version	Material pin	Pin version	Installation type
b)	218-9110.00-00000	with countersunk holes for M6	stainless steel	pressed in	screw-on
a)	218-9125.00-00000	molded in screws	stainless steel	pressed in	screw-on

DST Hinge 63x50 Pr01 180°

[4-264DST]

for nested door

Advantages

- Hinge with DIRAK-SNAP-Technology.
- Combination: The short hinge half with DST, the long hinge half with molded in counter-sunk screws or with counter-sunk holes.
- Allows for corner applications.
- RH or LH application.
- 180° Opening angle.

Materials

- **Hinge parts:** zinc die, black
- **Pin:** stainless steel
- **Snap wedges:** sintered steel, zinc plated

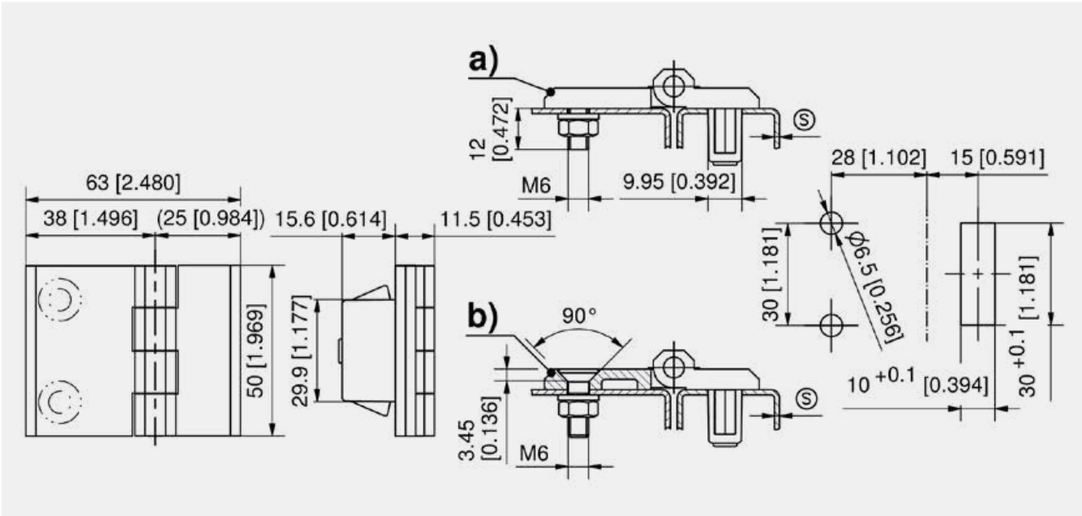

Hinge with holes for countersunk screws M6

	Part Number	Clamping range	Material pin	Pin version	Installation type
b)	418-9102.00-00015	1.2 - 1.7 mm	stainless steel	pressed in	tool-less / screw-on
b)	418-9102.00-00020	1.7 - 2.2 mm	stainless steel	pressed in	tool-less / screw-on
b)	418-9102.00-00025	2.2 - 2.7 mm	stainless steel	pressed in	tool-less / screw-on
b)	418-9102.00-00030	2.7 - 3.2 mm	stainless steel	pressed in	tool-less / screw-on

Hinge with molded in screws M6

	Part Number	Clamping range	Material pin	Pin version	Installation type
a)	418-9103.00-00015	1.2 - 1.7 mm	stainless steel	pressed in	tool-less / screw-on
a)	418-9103.00-00020	1.7 - 2.2 mm	stainless steel	pressed in	tool-less / screw-on
a)	418-9103.00-00025	2.2 - 2.7 mm	stainless steel	pressed in	tool-less / screw-on
a)	418-9103.00-00030	2.7 - 3.2 mm	stainless steel	pressed in	tool-less / screw-on

	Accessories
755	292-0702.15-01030 **Reinforcement plate for cutout**
754	292-0401.00-03010 **Cutout-cover**
756	292-0306.80-02530 **Tool for uninstallation**

Hinges
www.METALIKA-KACIN.com
Hinges
www.METALIKA-KACIN.com

Hinge 60x60 Pr01 180°

[4-270]

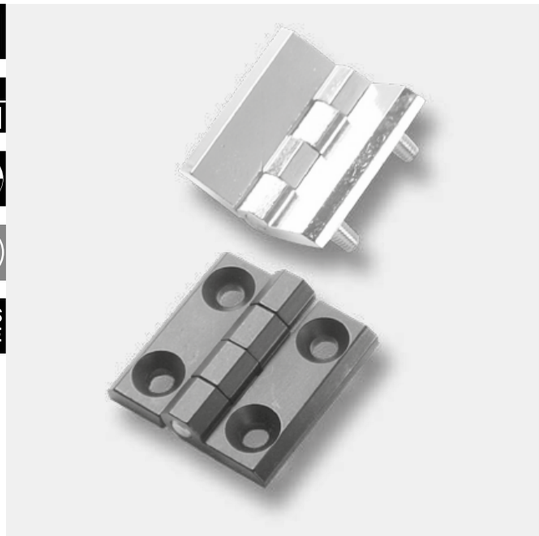

Advantages

- For nested doors
- Screw-on Hinge with or without grounding.
- RH or LH application.
- 180° Opening angle.
- Combination of versions a) and b) on request.

Materials

- **Hinge halves:** zinc die, chrome plated or black
- **Pin:** stainless steel or steel, zink plated
- **Molded in screws:** steel, zink plated
- **Grounding washer:** steel, zinc plated
- **Spring:** spring steel

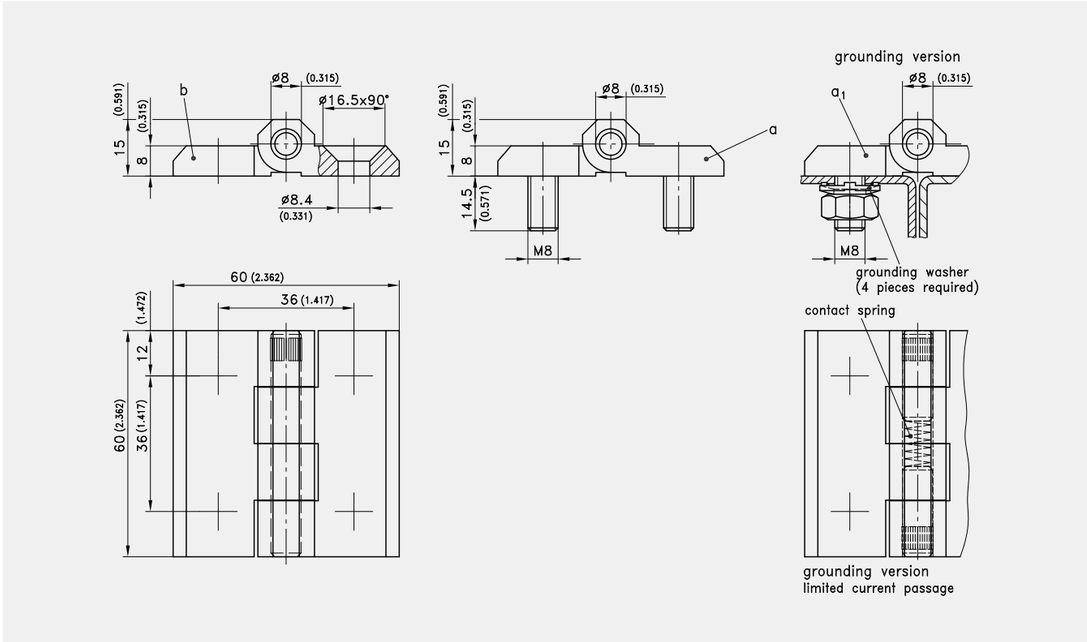

Hinge, zinc die, chrome plated

	Part Number	Version	Material pin	Pin version	Installation type
a)	218-9201.00-00000	Screws M8 molded in	stainless steel	pressed in	screw-on
b)	218-9203.00-00000	for countersunk screws M8	stainless steel	pressed in	screw-on

Hinge, zinc die, black

	Part Number	Version	Grounding type	Material pin	Pin version	Installation type
a)	218-9202.00-00000	Screws M8 molded in		stainless steel	pressed in	screw-on
a1)	218-9422.00-00000	Screws M8 molded in	Grounding washer	steel, zinc plated	pressed in	screw-on
b)	218-9204.00-00000	for countersunk screws M8		stainless steel	pressed in	screw-on

	Function extension
	861-0146.07-00008 **Grounding washer**

DST Hinge 60x60 Pr01 180°

[4-270DST]

Advantages

- For nested doors.
- Hinge visible.
- RH / LH application.
- 180° Opening angle.
- Tool-less installation / screw-on.

Materials

- **Hinge halves:** zinc die, black
- **Pin:** stainless steel
- **Pin molded in:** steel, zinc plated
- **Snap wedges:** sintered metal, coated

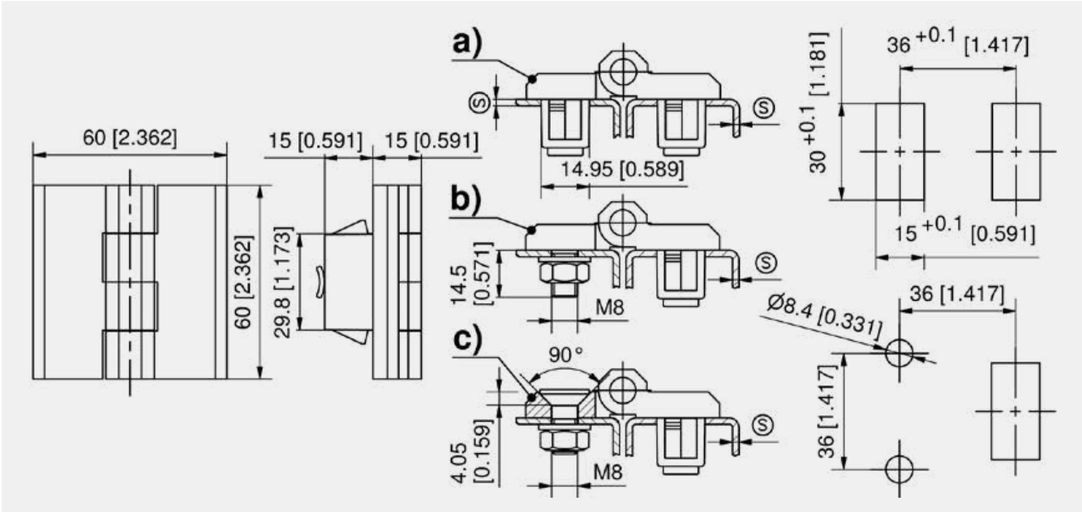

Hinge

	Part Number	Version	Clamping range	Material pin	Installation type
a)	418-9202.00-00015	clip-in	1.2 - 1.7 mm	stainless steel	tool-less
a)	418-9202.00-00020	clip-in	1.7 - 2.2 mm	stainless steel	tool-less
a)	418-9202.00-00025	clip-in	2.2 - 2.7 mm	stainless steel	tool-less
a)	418-9202.00-00030	clip-in	2.7 - 3.2 mm	stainless steel	tool-less
a)	418-9202.00-00035	clip-in	3.2 - 3.7 mm	stainless steel	tool-less
b)	418-9203.00-00015	Screws M8 molded in	1.2 - 1.7 mm	stainless steel	tool-less / screw-on
b)	418-9203.00-00020	Screws M8 molded in	1.7 - 2.2 mm	stainless steel	tool-less / screw-on
b)	418-9203.00-00025	Screws M8 molded in	2.2 - 2.7 mm	stainless steel	tool-less / screw-on
b)	418-9203.00-00030	Screws M8 molded in	2.7 - 3.2 mm	stainless steel	tool-less / screw-on
b)	418-9203.00-00035	Screws M8 molded in	3.2 - 3.7 mm	stainless steel	tool-less / screw-on
c)	418-9208.00-00015	with countersunk holes for M8	1.2 - 1.7 mm	stainless steel	tool-less / screw-on
c)	418-9208.00-00020	with countersunk holes for M8	1.7 - 2.2 mm	stainless steel	tool-less / screw-on
c)	418-9208.00-00025	with countersunk holes for M8	2.2 - 2.7 mm	stainless steel	tool-less / screw-on
c)	418-9208.00-00030	with countersunk holes for M8	2.7 - 3.2 mm	stainless steel	tool-less / screw-on
c)	418-9208.00-00035	with countersunk holes for M8	3.2 - 3.7 mm	stainless steel	tool-less / screw-on

	Accessories
755	292-0701.15-01530 **Reinforcement plate for cutout**
756	292-0301.15-00000 **Tool for uninstallation**
756	292-0306.80-02530 **Tool for uninstallation**

www.METALIKA-KACIN.com
Hinges

Hinge Pr01 270°

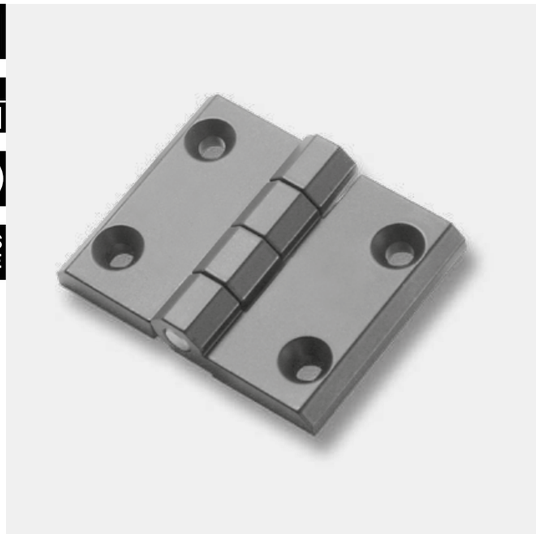

for nested door

Advantages

- Screw-on hinge.
- RH or LH application.
- 270° Opening angle.
- Allowing application around corner.
- Combination of versions on request.

Materials

- **Hinge halves:** zinc die, chrome plated or black
- **Pin:** stainless steel

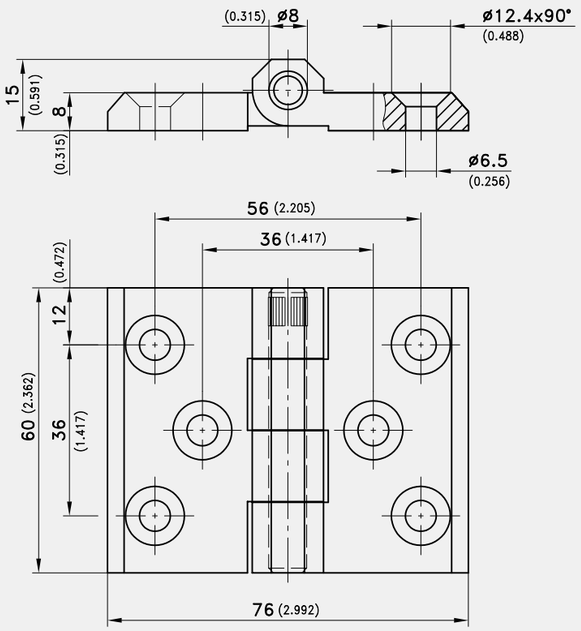

Hinge, zinc die, chrome plated

	Part Number	Version	Material pin	Pin version	Installation type
a)	218-9205.00-00000	for countersunk screws M6 with 4 holes	stainless steel	pressed in	screw-on
b)	218-9207.00-00000	for countersunk screws M6 with 6 holes	stainless steel	pressed in	screw-on

Hinge, zinc die, black

	Part Number	Version	Material pin	Pin version	Installation type
a)	218-9206.00-00000	for countersunk screws M6 with 4 holes	stainless steel	pressed in	screw-on
b)	218-9208.00-00000	for countersunk screws M6 with 6 holes	stainless steel	pressed in	screw-on

Hinge Pr01 270°

Advantages

- Screw-on hinge for M8 countersunk screws.
- For nested doors.
- RH or LH application.
- 270° Opening angle.

Materials

- **Hinge halves:** zinc die, chrome plated or black
- **Pin:** stainless steel

Remarks

- * The back of the hinge at the marked locations has prepared holes which can easily be drilled to create additional installation holes.

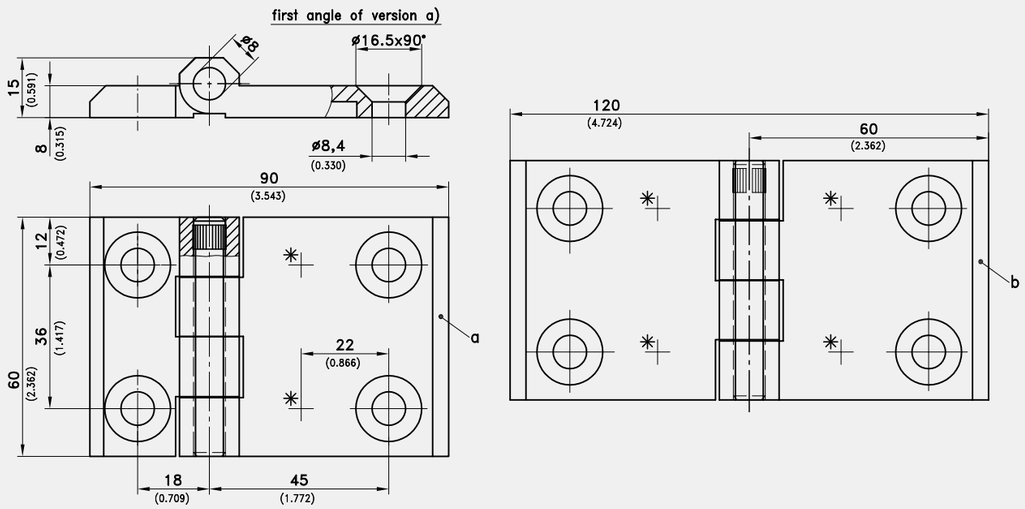

Hinge, zinc die, chrome plated

	Part Number	Version	Material pin	Pin version	Installation type
a)	218-9216.00-00000	different Hinge half lengths	stainless steel	pressed in	screw-on
b)	218-9217.00-00000	identical Hinge half lengths	stainless steel	pressed in	screw-on

Hinge, zinc die, black

	Part Number	Version	Material pin	Pin version	Installation type
a)	218-9218.00-00000	different Hinge half lengths	stainless steel	pressed in	screw-on
b)	218-9219.00-00000	identical Hinge half lengths	stainless steel	pressed in	screw-on

Hinge Pr01 270°

[4-274]

Advantages

- Screw-on hinge with M8 molded in screws.
- For nested doors.
- RH or LH application.
- 270° Opening angle.
- The short hinge half length is also available with counter-sunk holes, please see product system 4-270 and 4-272.

Materials

- **Hinge halves:** zinc die, chrome plated or black
- **Molded in screws:** steel, zink plated
- **Pin:** stainless steel

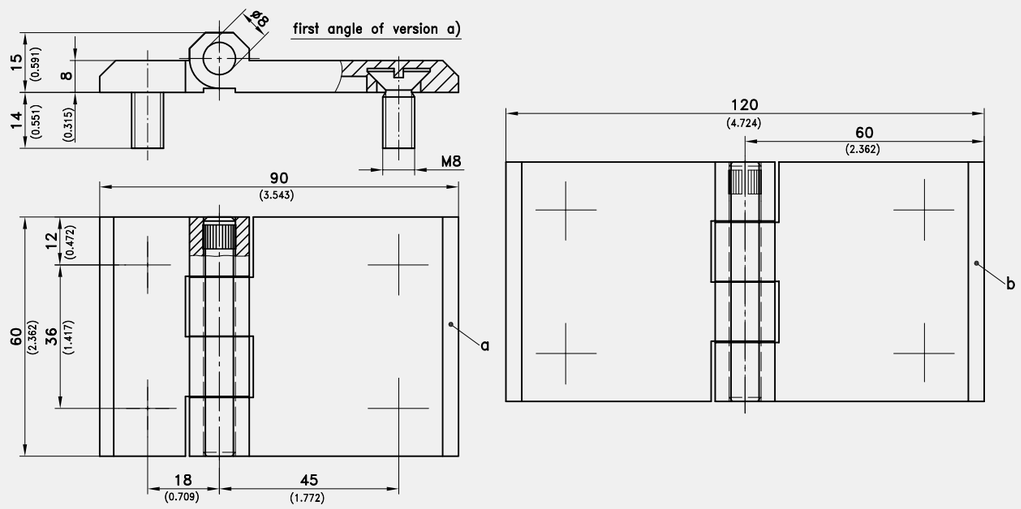

Hinge, zinc die, chrome plated

	Part Number	Version	Material pin	Pin version	Installation type
a)	218-9209.00-00000	different Hinge half lengths	stainless steel	pressed in	screw-on
b)	218-9211.00-00000	identical Hinge half lengths	stainless steel	pressed in	screw-on

Hinge, zinc die, black

	Part Number	Version	Material pin	Pin version	Installation type
a)	218-9210.00-00000	different Hinge half lengths	stainless steel	pressed in	screw-on
b)	218-9212.00-00000	identical Hinge half lengths	stainless steel	pressed in	screw-on

DST Hinge Pr01 270°

[4-274DST]

Advantages

- Heavy duty 270° hinge.
- For nested doors.
- The short hinge half length is with DIRAK-SNAP-Technology, the long hinge half is with molded in countersunk screws.
- RH or LH application.
- 270° Opening angle.

Materials

- **Hinge parts:** zinc die, black
- **Pin:** stainless steel
- **Snap wedges:** sintered steel, zinc plated

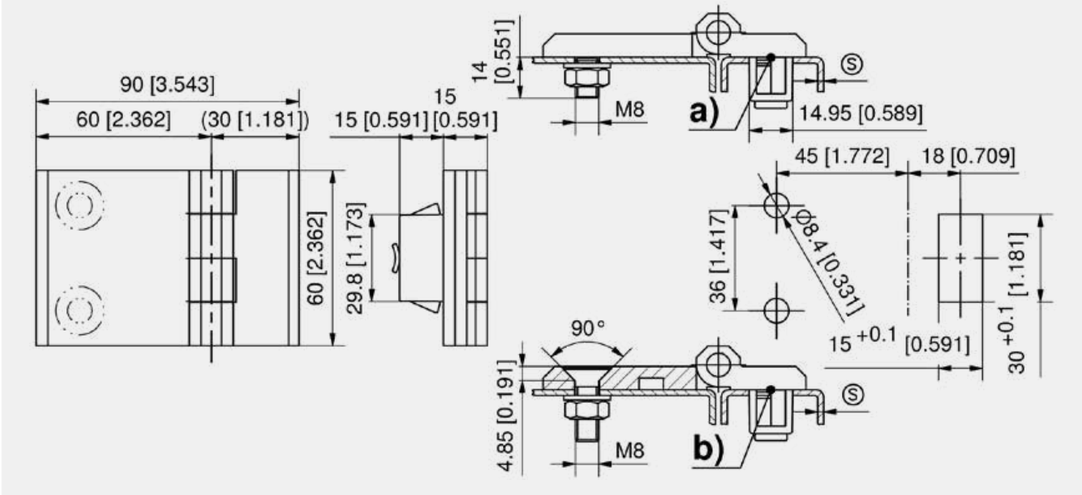

Hinge

	Part Number	Clamping range	Material pin	Pin version	Installation type
a)	418-9205.00-00015	1.2 - 1.7 mm	stainless steel	pressed in	tool-less / screw-on
a)	418-9205.00-00020	1.7 - 2.2 mm	stainless steel	pressed in	tool-less / screw-on
a)	418-9205.00-00025	2.2 - 2.7 mm	stainless steel	pressed in	tool-less / screw-on
a)	418-9205.00-00030	2.7 - 3.2 mm	stainless steel	pressed in	tool-less / screw-on
a)	418-9205.00-00035	3.2 - 3.7 mm	stainless steel	pressed in	tool-less / screw-on
b)	418-9204.00-00015	1.2 - 1.7 mm	stainless steel	pressed in	tool-less / screw-on
b)	418-9204.00-00020	1.7 - 2.2 mm	stainless steel	pressed in	tool-less / screw-on
b)	418-9204.00-00025	2.2 - 2.7 mm	stainless steel	pressed in	tool-less / screw-on
b)	418-9204.00-00030	2.7 - 3.2 mm	stainless steel	pressed in	tool-less / screw-on
b)	418-9204.00-00035	3.2 - 3.7 mm	stainless steel	pressed in	tool-less / screw-on

	Accessories
755	292-0701.15-01530 **Reinforcement plate for cutout**
756	292-0301.15-00000 **Tool for uninstallation**
756	292-0306.80-02530 **Tool for uninstallation**

Hinge Pr01 270°

[4-278]

for nested door

Advantages

- Screw-on hinge.
- 270° opening angle.
- As an alternative please refer to the stainless steel version on product system 7-260.

Materials

a) and b)

- **Hinge-halves:** steel, zinc plated or black coated

c)

- **Hinge complete:** steel, chrome plated or dull brass plated

Remarks

1. both rolls of long shank welded
2. grease nippel
3. tight pin

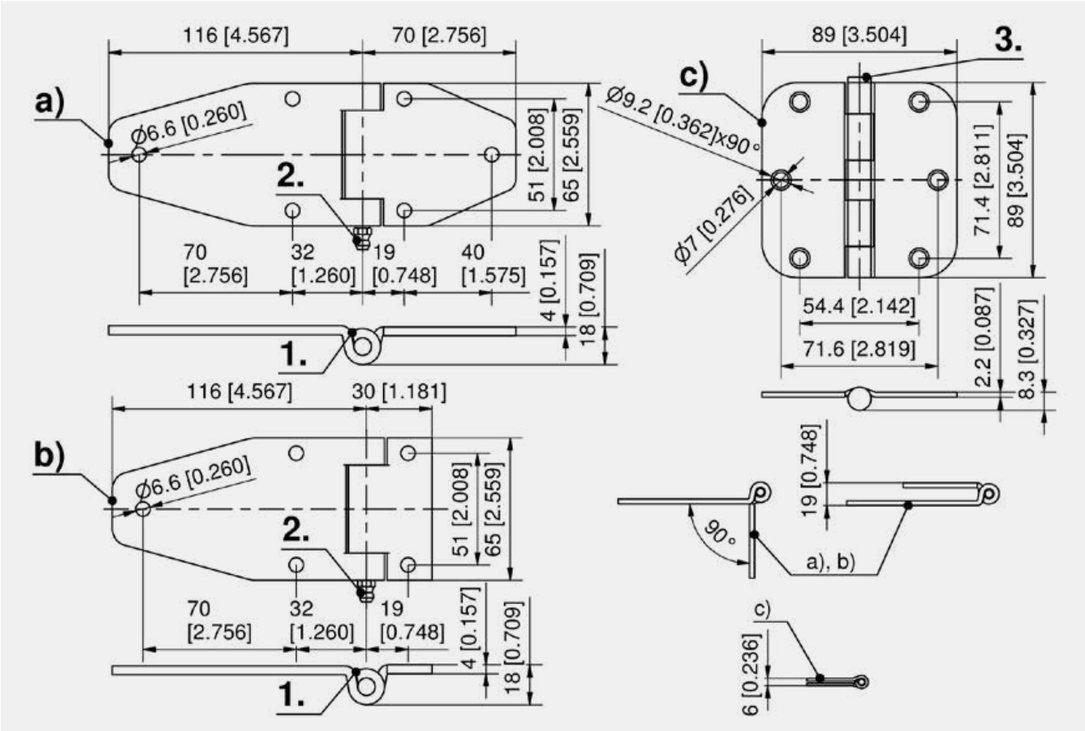

Hinge

	Part Number	Version	Width W	Height H	Pin version	Installation type
a)	267-9003.00-00000	zinc plated	186 mm	65 mm	pressed in	screw-on
a)	267-9006.00-00000	black coated	186 mm	65 mm	pressed in	screw-on
b)	267-9004.00-00000	zinc plated shortened shank	146 mm	65 mm	pressed in	screw-on
c)	267-9701.00-00000	chrome plated	89 mm	89 mm	pressed in	screw-on
c)	267-9702.00-00000	brassed	89 mm	89 mm	pressed in	screw-on

Hinge Pr01 270° Stainless Steel

[7-260]

Lift-off, for nested door, stainless steel

Advantages

- Screw-on hinge.
- 270° opening angle.
- Version c) is a Lift-off hinge.

Materials

a) and b)

- **Hinge-parts:** stainless steel AISI 304, matt polished

c)

- **Hinge complete:** stainless steel, satin polished

Remarks

1. both rolls of long shank welded
2. grease nipple

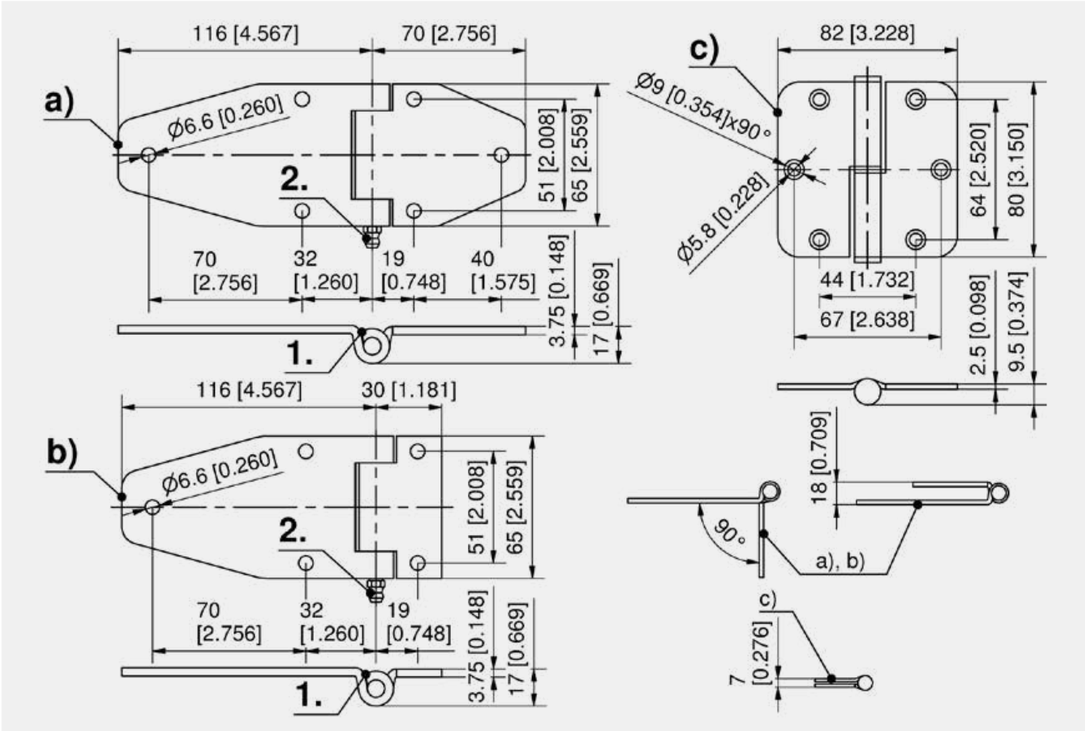

Hinge

	Part Number	Version	Width W	Height H	Material pin	Pin version	Installation type
a)	267-9005.00-00000		186 mm	65 mm	stainless steel	pressed in	screw-on
b)	267-9007.00-00000		146 mm	65 mm	stainless steel	pressed in	screw-on
c)	267-9303.00-00000	RH	82 mm	80 mm	stainless steel	pressed in	screw-on
c)	267-9304.00-00000	LH	82 mm	80 mm	stainless steel	pressed in	screw-on

Hinge Pr01 180° Stainless Steel

[7-225]

adjustable, for nested door, stainless steel AISI 316Ti

Advantages

- For nested doors.
- Hinge visible.
- 180° Opening angle.
- Threaded hinge pin allows for height adjustability of ±4mm.
- Screw-on.

Materials

- **All parts:** stainless steel AISI 316 Ti, satin polished

Remarks

Properties of material AISI 316 Ti: The titanium increases even further the corrosion resistance particularly the inter-cristalline corrosion at the grain boundaries

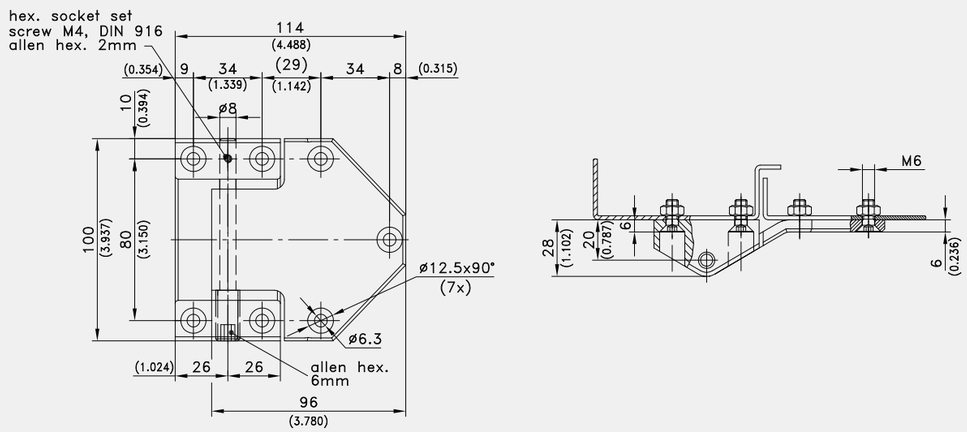

Hinge, adjustable

Part Number	Width W	Height H	Adjustment direction	Material pin	Installation type
217-9605.00-00000	114 mm	100 mm	Height	stainless steel	screw-on

Hinges www.METALIKA-KACIN.com
Hinges www.METALIKA-KACIN.com

Hinge Pr01 180°

[4-350]

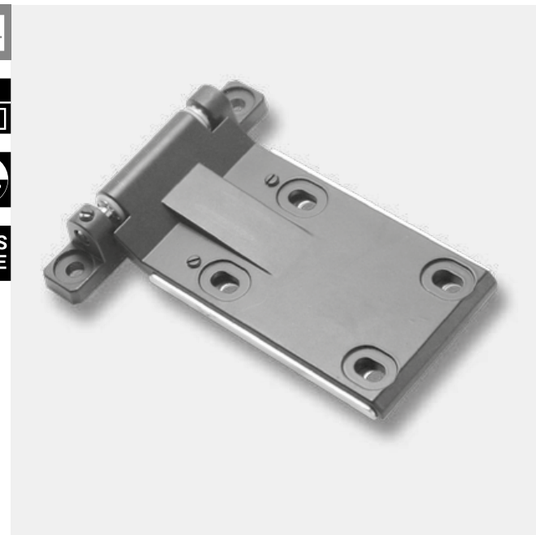

Advantages

- 3D Hinge adjustable.
- For nested/ flush doors.
- Adjustable in: height ±2mm (0.079) / width ±2mm (0.079) / depth ±2mm (0.079)
- 180° Opening angle.
- RH and LH version.
- Version not assembled for RH and LH application.

Materials

- **Frame-part and door-part:** zinc die, untreated or black
- **Base-plate:** steel, zinc plated or black
- **Bushings:** PA, natural
- **Pin:** brass, untreated or stainless steel
- **Washers:** stainless steel

Remarks

Base plate has 4 holes Ø4.1 for possible additional fastening at the door.

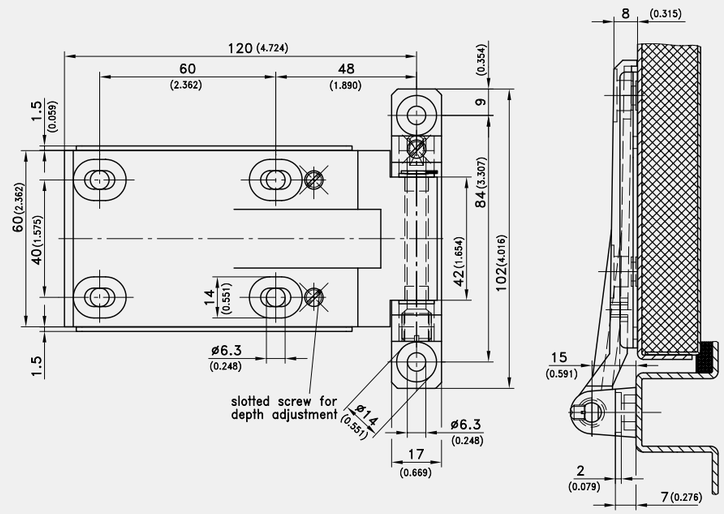

3D Hinge

Part Number	i-field	Version	Surface	Material pin	Installation type
217-9402.00-00000		RH	untreated	brass	screw-on
217-9403.00-00000		LH	untreated	brass	screw-on
217-9404.00-00000		not assembled	untreated	brass	screw-on
217-9408.00-00000	Base plate: steel, black	RH	untreated	stainless steel	screw-on
217-9409.00-00000	Base plate: steel, black	LH	untreated	stainless steel	screw-on
217-9410.00-00000	Base plate: steel, black	not assembled	untreated	stainless steel	screw-on
217-9405.00-00000		RH	black	brass	screw-on
217-9406.00-00000		LH	black	brass	screw-on
217-9407.00-00000		not assembled	black	brass	screw-on
217-9411.00-00000	Base plate: steel, black	RH	black	stainless steel	screw-on
217-9412.00-00000	Base plate: steel, black	LH	black	stainless steel	screw-on
217-9413.00-00000	Base plate: steel, black	not assembled	black	stainless steel	screw-on

DST Hinge Pr01 180°

[4-350DST]

Advantages

- 3D Hinge with DIRAK-SNAP-Technology.
- Adjustable.
- For nested doors.
- Adjustable in: height ±2mm (0.079) / width ±2mm (0.079) / depth ±2mm (0.079)
- 180° Opening angle.
- RH and LH version.
- The installation of the frame-part is effected by a simple push into appropriate cutouts.

Materials

- **Frame-part and door-part:** zinc die, black
- **Base-plate:** steel, zinc plated
- **Pin:** brass, untreated, stainless steel on request
- **Snap wedges:** sintered metal, coated
- **Bushings:** PA, natural
- **Studs, bearing washer and c-clips:** stainless steel

Remarks

1. pushing screw for depth adjusting
2. securing screw for adjustable brass pin
3. PA bushing
4. Base plate has 4 holes Ø4.1 for possible additional fastening at the door.

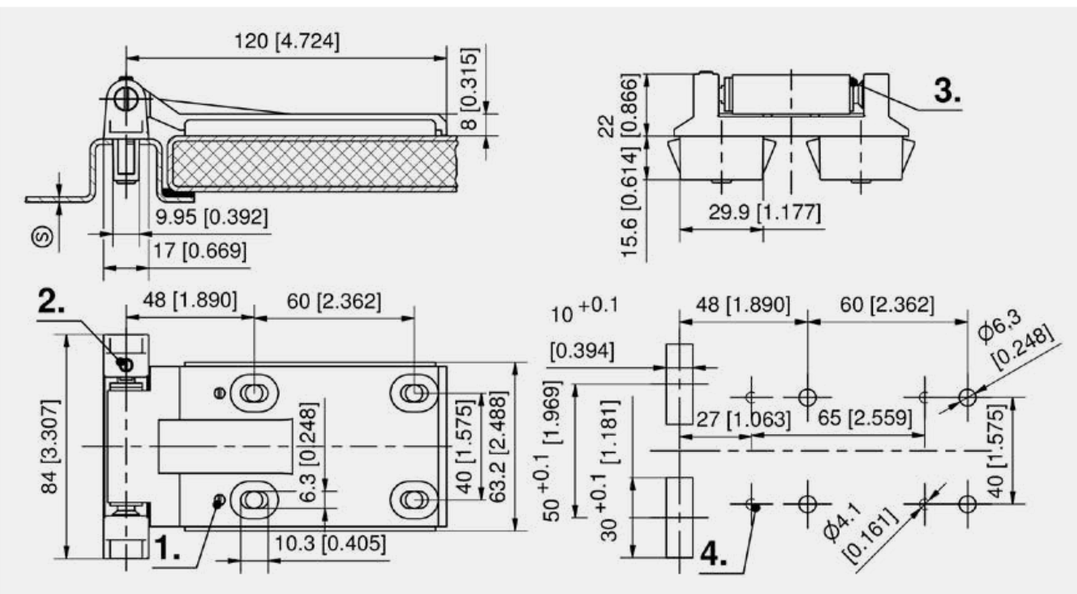

3D Hinge

Part Number	Clamping range	Version	Material pin	Installation type
417-9002.00-00015	1.2 - 1.7 mm	RH	brass	tool-less / screw-on
417-9002.00-00020	1.7 - 2.2 mm	RH	brass	tool-less / screw-on
417-9002.00-00025	2.2 - 2.7 mm	RH	brass	tool-less / screw-on
417-9002.00-00030	2.7 - 3.2 mm	RH	brass	tool-less / screw-on
417-9003.00-00015	1.2 - 1.7 mm	LH	brass	tool-less / screw-on
417-9003.00-00020	1.7 - 2.2 mm	LH	brass	tool-less / screw-on
417-9003.00-00025	2.2 - 2.7 mm	LH	brass	tool-less / screw-on
417-9003.00-00030	2.7 - 3.2 mm	LH	brass	tool-less / screw-on

	Accessories
755	292-0702.15-01030 **Reinforcement plate for cutout**
754	292-0401.00-03010 **Cutout-cover**
756	292-0306.80-02530 **Tool for uninstallation**

www.METALIKA-KACIN.com

Scharnier

Mat.: Kunststoff, schwarz

Art.-Nr.: 12203

Kunststoff-Spritzguss-Scharnier
Aus glasfaserverstärktem Nylon komplett mit Gummidichtung
In erster Linie für Glasanwendungen.

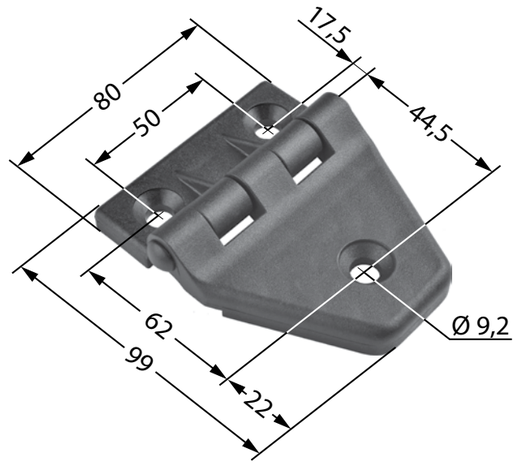

www.METALIKA-KACIN.com

www.METALIKA-KACIN.com

Seitentürscharniere

Mat.: St., galv. verzinkt
Ausführung: mit Ölerstift
und mont. Schmiernippel

www.METALIKA-KACIN.com

Art.-Nr.: 09010

Gewerbehöhe:	50 mm
offene Breite:	142 mm
Stärke:	4 mm
Stift-Ø:	8 mm
Öffnungswinkel:	ca. 180°

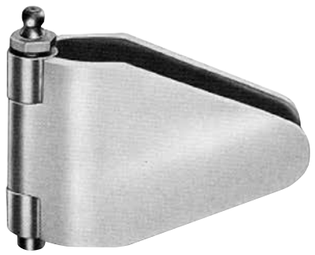

Art.-Nr.: 03159

Gewerbehöhe:	80 mm
offene Breite :	220 mm
Stärke:	6 mm
Stift-Ø:	8 mm
Öffnungswinkel:	ca. 180°

Seitentürscharniere

VA

Mat.: VA
Ausführung: Öffnungswinkel 180°
mit Umgehung des Türdichtungskopfes
Scharnierstift vernietet

www.METALIKA-KACIN.com

Art.-Nr.: 01957

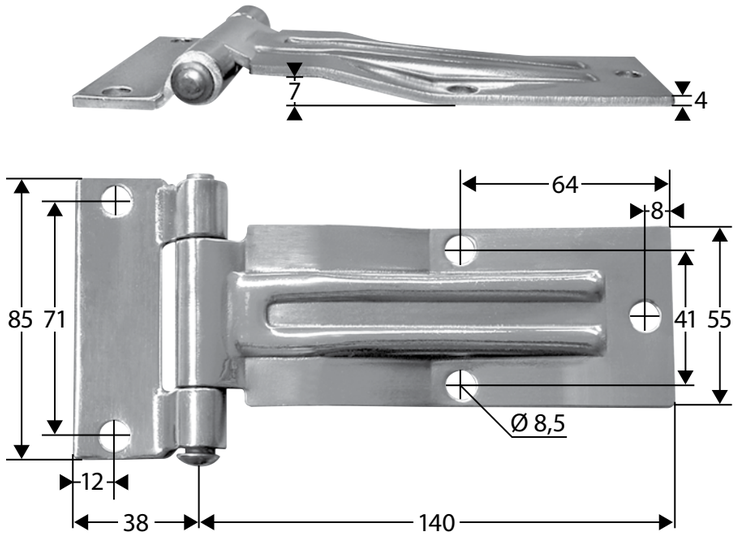

Art.-Nr.: 01958

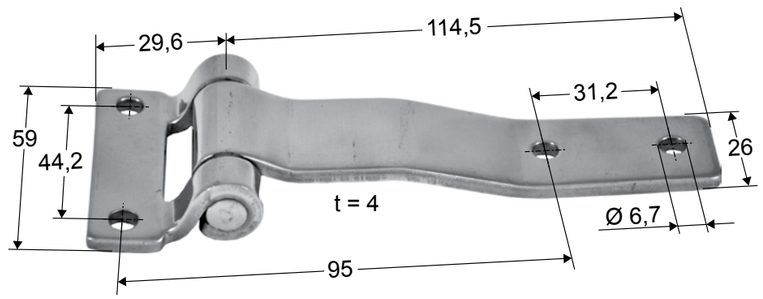

Heckportalscharnier

Mat.: nichtrostender Stahl 1.4301
Ausführung: gelocht oder
mit Gewindebolzen

VA

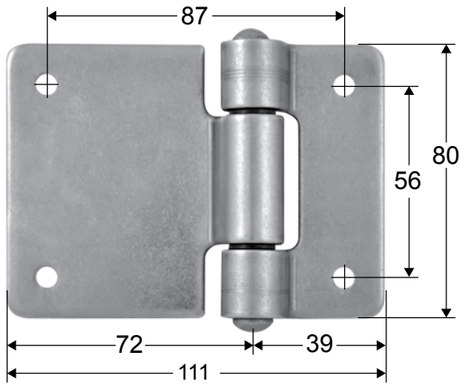

Art.-Nr.	Stärke (t)	Ausführung
01959	4 mm	mit Gewindebolzen M8 x 25 mm
01961	4 mm	mit Anschraublöchern Ø 6 mm

Scharnier

Mat.: VA (WS 4301)
Ausführung: mit Edelstahl Zylinderstift
mit Edelstahl Zwischenringen
Oberfläche trowalisiert

VA

Art.-Nr.	B x L	Stärke	Loch-Ø
01947	75 x 75 mm	2,5 mm	4,2 mm

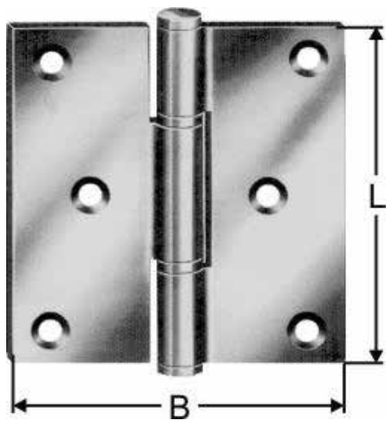

Scharniere

Mat.: VA (WS 4301)
Ausführung: mit vernietetem Stift

VA

Art.-Nr.	B x L	Stärke	Loch-Ø
01938	27 x 40 mm	1,0 mm	3,5 mm
01939	32 x 50 mm	1,0 mm	4,5 mm
01940	41 x 80 mm	1,5 mm	3,5 mm
01941	72 x 100 mm	1,75 mm	4,0 mm
01942	45 x 30 mm	1,0 mm	4,5 mm
01944	75 x 50 mm	1,25 mm	5,4 mm

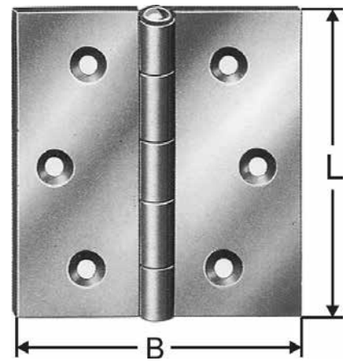

Scharniere

Mat.: St., galv. verzinkt
Ausführung: mit vernietetem Stift

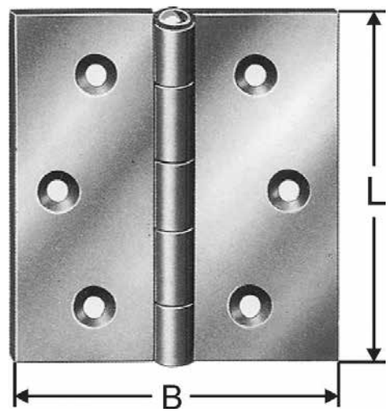

Art.-Nr.	B x L	Stärke	Loch-Ø	Stift
03368	58 x 80 mm	1,8 mm	3,5 mm	MS
03369	61 x 40 mm	1,25 mm	4,5 mm	ST
03370	75 x 50 mm	2,0 mm	4,5 mm	ST
09615	60 x 40 mm	1,2 mm	3,5 mm	MS
09617	90 x 60 mm	2,8 mm	4,5 mm	MS

Weitere Abmessungen auf Anfrage

www.METALIKA-KACIN.com
www.METALIKA-KACIN.com

Stangenscharnier

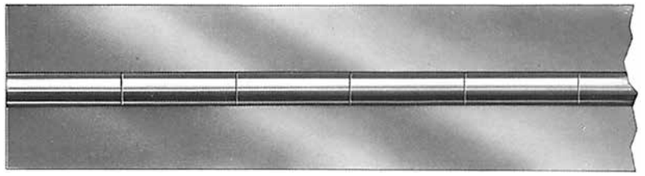

Fertigungslänge: 3.500 mm

Art.-Nr.	Breite gesamt	Material-Stärke	Dorn-Ø	Material Lappen	Material Dorn
02032	32 mm	0,70 mm	1,75 mm	VA	VA
02033	32 mm	1,50 mm	3,0 mm	VA	VA
02034	40 mm	1,50 mm	3,0 mm	VA	VA
02030	50 mm	1,25 mm	2,5 mm	VA	VA
02031	50 mm	1,50 mm	6,0 mm	VA	VA

VA

Fertigungslänge: 2.000 mm

02031/2.000	50 mm	1,50 mm	6,0 mm	VA	VA

VA

Weitere Abmessungen und Ausführungen auf Anfrage.

Anschweißbandrollen

Mat.: St, roh-blank
Ausführung: mit festem Ms-Stift
und losem Ms-Zwischenring
Rundkopf, gezogene Ausführung

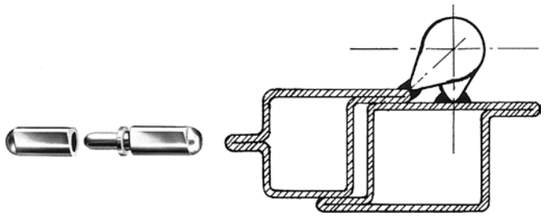

Art.-Nr.	L	d1	e	d2
11024	40 mm	8 mm	9,7 mm	5 mm
11025	50 mm	8 mm	9,7 mm	5 mm
11026	60 mm	10 mm	12,0 mm	6 mm
11027	80 mm	13 mm	15,5 mm	8 mm
11028	100 mm	16 mm	20,0 mm	10 mm
11029	120 mm	16 mm	20,0 mm	11 mm
11030	135 mm	18 mm	21,0 mm	12 mm
11031	150 mm	20 mm	25,5 mm	13 mm
11032	180 mm	20 mm	25,5 mm	14 mm
11033	200 mm	23 mm	27,0 mm	16 mm

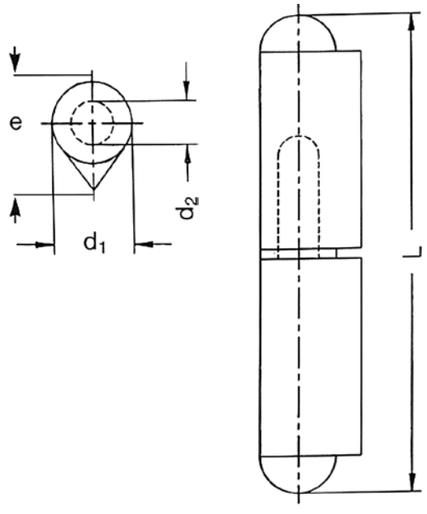

Weitere Abmessungen und Ausführungen auf Anfrage.

Ferner gegen Aufpreis lieferbar:
Einige Abmessungen in VA

www.METALIKA-KACIN.com

Werkzeugkastenscharniere

Mat.: St.

Art.-Nr.: 03149
Stärke: 5 mm
Ausführung: galv. verzinkt
mit St.-Stift

Art.-Nr.: 03150
Stärke: 3 mm
Ausführung: roh-blank
mit St.-Stift

Ferner gegen Aufpreis galv. verzinkt lieferbar (Art.-Nr.: 3150 Z)

www.METALIKA-KACIN.com

Kreuzgehange

Mat.: St., galv. verzinkt
Ausführung: mit vernietetem Stift

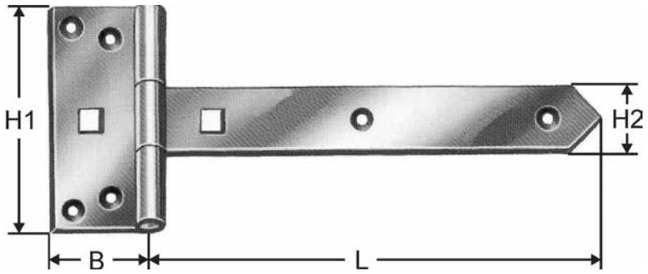

Art.-Nr.	kurzer Lappen H1 x B	langer Lappen L x H2	Loch-Ø	Stärke
09620	105 x 70 mm	300 x 40 mm	6,5 mm	4 mm
09621	105 x 70 mm	400 x 40 mm	6,5 mm	3,5 mm

Weitere Abmessungen auf Anfrage.

Bordwandscharniere

Mat.: St, galv. verzinkt
Kopfhöhe 29,5 mm

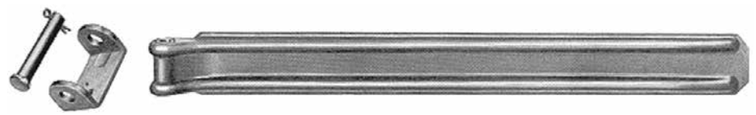

Art.-Nr.	09070/320	09070/370	09070/420	09070/470	09070/520
Länge	320 mm	370 mm	420 mm	470 mm	520 mm

Art.-Nr.	09070/570	09070/620	09070/670	09070/720	09070/770
Länge	570 mm	620 mm	670 mm	720 mm	770 mm

Ersatzbedarf: Art.-Nr. 9070/1
Anschweißböckchen

Art.-Nr. 9070/2
Bolzen und Splint

Türband

Mat.: LM, gebeizt und techn. elox. (E6EV1)

Art.-Nr.: 09016
Drehpunktabstand: 18 mm
Gewerbehöhe: 80 mm
Schrauben durch LM-Schieber verdeckt

Art.-Nr.: 09016w
Wie Art.-Nr.: 0916
jedoch weiß pulverbeschichtet

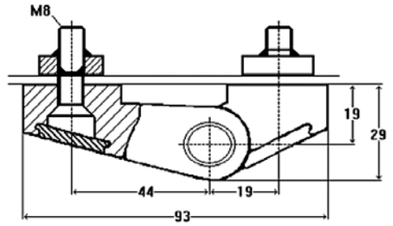

Scharnier

Mat.: GdZn, silbern lackiert

Art.-Nr.: 01980
ges. Länge x Breite: 105 x 32 mm

Ferner gegen Aufpreis lieferbar:
Schwarz oder weiß pulverbeschichtet

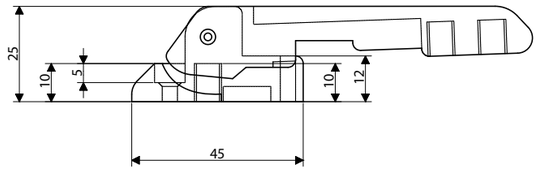

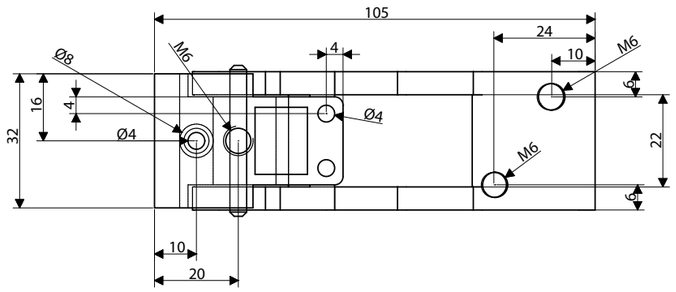

www.METALIKA-KACIN.com
www.METALIKA-KACIN.com

Scharnierlager

Mat.: St.

Art.-Nr.	B	H	Stärke	Loch- Ø
08892	43 mm	30 mm	8 mm	12,5 mm
08891	47 mm	40 mm	8 mm	12,5 mm

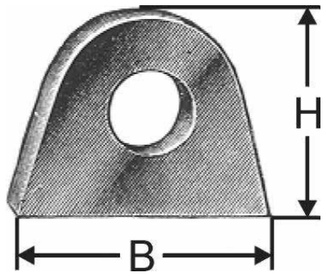

Aluminiumscharnier

Mat.: LM (AlMgSi 0,8 F 25 WA)
Fertigungslänge: 2.440 mm

Art.-Nr.: 11192

Für den waagerechten Anschlag von Klappen, deren Gewicht nicht mehr als 25 Kg/m beträgt.

Max. Öffnungswinkel: 100°

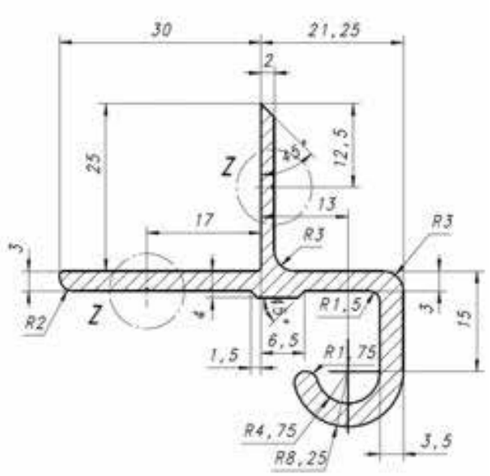

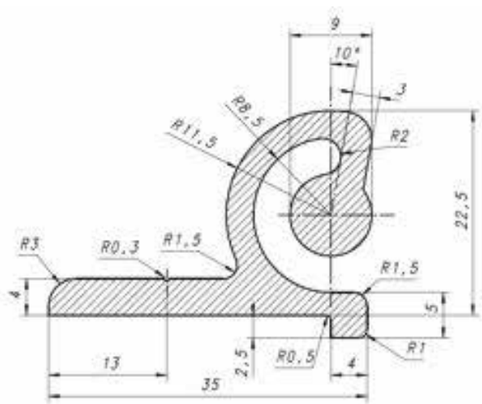

Kofferdeckelscharnier

Mat.: GTW, galv. verzinkt
Ausführung: aushängbar
4 Bohrlocher 6 mm Ø
mit Senkung
Höhe: 23 mm

Art.-Nr.: 09275/76
bestehend aus:

Art.-Nr.: 09275
loses Böckchen

Art.-Nr.: 09276
loser Lappen

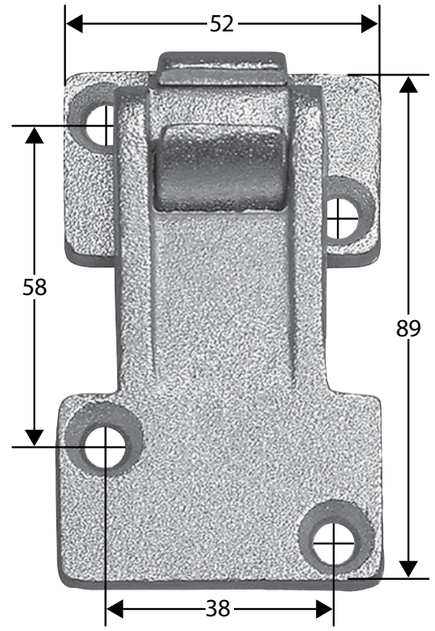

Scharnier

Mat.: Aluminium, RAL 9006 beschichtet

Art.-Nr.: 11084
mit profilierter Auflagefläche

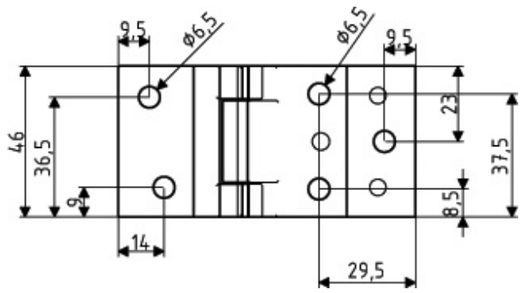

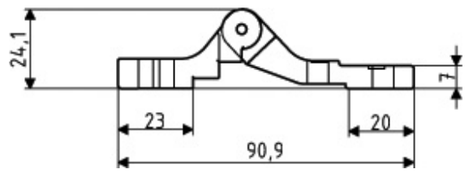

www.METALIKA-KACIN.com
www.METALIKA-KACIN.com

Scharnierstifte

Mat.: St.
Ausführung: mit Rundkopf

Art.-Nr.	D	x	Länge
01900	6	x	45 mm
01901	6	x	55 mm
01903	7	x	75 mm
01904	8	x	55 mm
01906	8	x	85 mm
01908	10	x	85 mm
01909	10	x	105 mm

Ölerstifte

Mat.: St.
Ausführung: mit beiliegendem Schmiernippel

Art.-Nr.	D	x	Länge
02787/35	6	X	35 mm
02787	6	x	45 mm
02788	6	x	55 mm
02789	8	x	50 mm
02790	8	x	55 mm
02791	8	x	65 mm
02792	8	x	75 mm
02793	8	x	85 mm
02797	10	x	85 mm

Abbildung entspricht Ölerstift Ø 6mm

Abbildung entspricht Ölerstift ab Ø 8mm

Schmiernippel

nach DIN 71412

Mat.: St., galv. verzinkt und gehärtet
Ausführung: 5 mm Gewindelänge

Art.-Nr.	Gewinde	Sechskant	Gesamthöhe
01520	M 6 x 1 mm	7 mm	15,0 mm
01520/11	M 6 x 1 mm	11 mm	15,0 mm
01521	M 8 x 1 mm	9 mm	15,0 mm
01522	M 10 x 1 mm	11 mm	15,0 mm

H1

Art.-Nr.	Gewinde	Vierkant	Gesamthöhe
01530	M 6 x 1 mm	9 mm	20,5 mm
01531	M 8 x 1 mm	9 mm	20,5 mm
01532	M 10 x 1 mm	11 mm	20,5 mm

H2

Art.-Nr.	Gewinde	Vierkant	Gesamthöhe
01540	M 6 x 1 mm	9 mm	18,0 mm
01541	M 8 x 1 mm	9 mm	18,0 mm
01542	M 10 x 1 mm	11 mm	18,0 mm

H3

Schmiernippelkappen

Mat.: PVC

Art.-Nr.: 01910 gelb

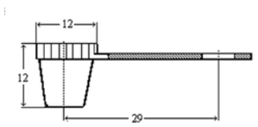

Art.-Nr.: 01911 gelb

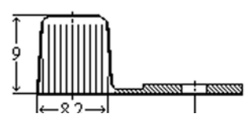

Art.-Nr.: 01912 gelb

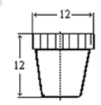

Art.-Nr.: 01910 rot

Art.-Nr.: 01911 rot

Art.-Nr.: 01912 rot

LEAF HINGE

509

- Generally used for plain/flush-mounted, isolated, heavy doors
- Steel construction provides very high resistance
- M8 x 12 mm coach bolts supplied.

MATERIAL
BODY: Steel
PIN: Stainless Steel

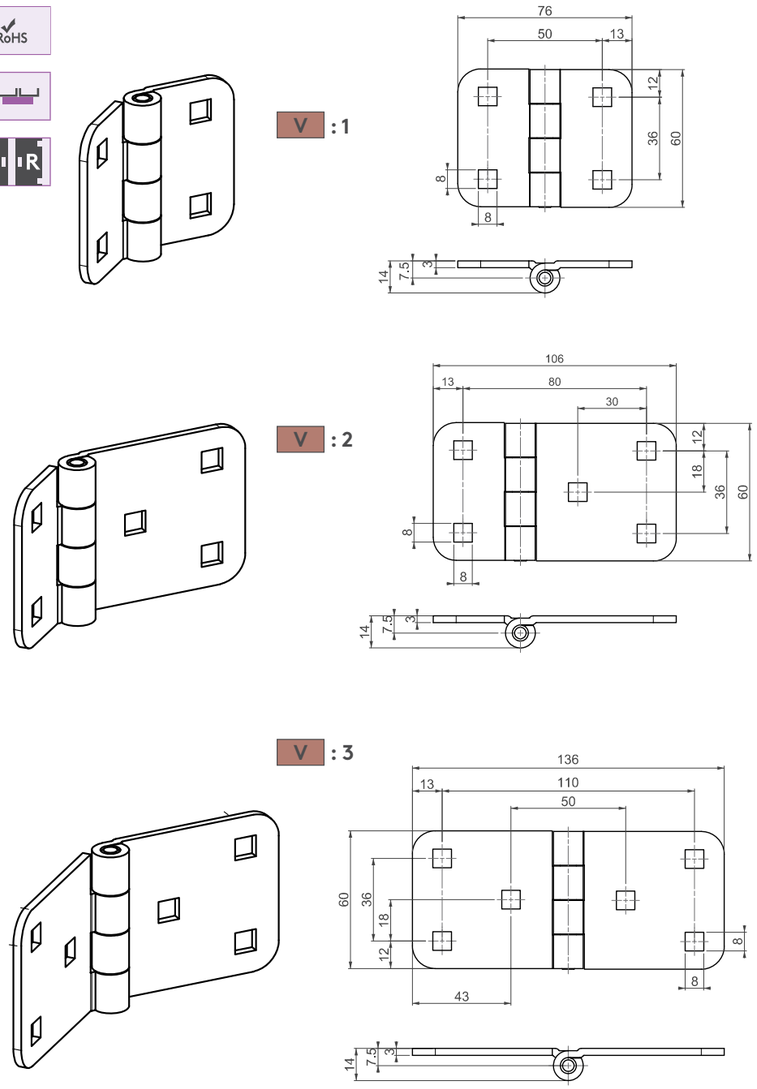

PRODUCT CODE

509 - 6 - F - V

GROUP CODE | MATERIAL | FINISH | VERSION

MATERIAL	M
Steel	6

FINISH	F
Zinc plated	3
Black coated	2

Hinge Rotation Angle

www.METALIKA-KACIN.com

LEAF HINGE

609

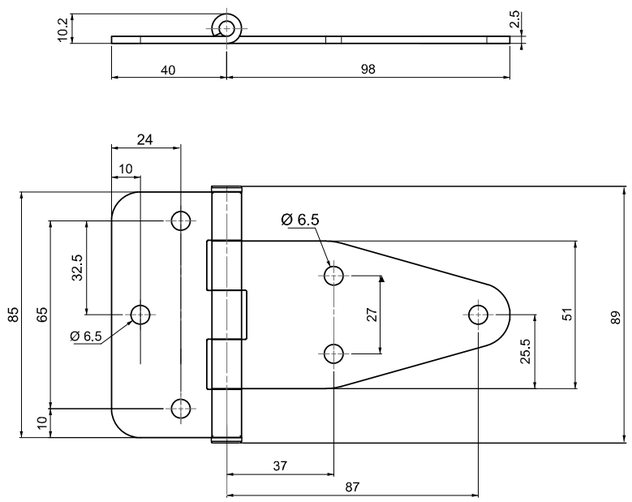

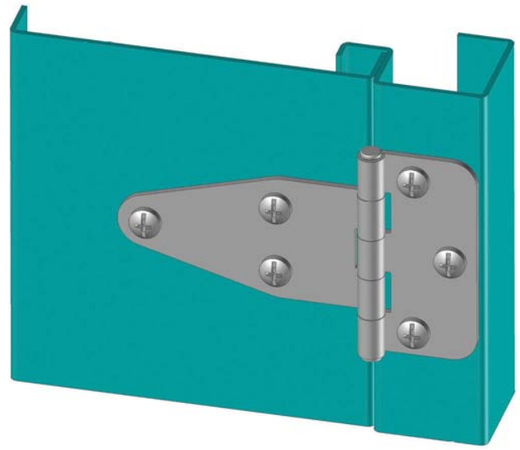

- **Stainless steel version: page 508**
- Generally used for plain/flush-mounted, isolated heavy doors
- Both parts attached by screws or nuts and bolts
- Hinge-rotation angle 180°

MATERIAL
BODY: Steel
PIN: Stainless Steel

PRODUCT CODE

609 - 6 - F

GROUP CODE | MATERIAL | FINISH

MATERIAL	M
Steel	6

FINISH	F
Zinc plated	3
Black coated	2

Hinge Rotation Angle

Note: Bolts are not supplied

www.METALIKA-KACIN.com

LEAF HINGE

1609

- **Stainless steel version: page 510**
- Generally, used for plain/flush mounted, isolated, heavy doors.
- Both parts are attached by screws or nuts and bolts
- Hinge Rotation angle is 180°

MATERIAL
BODY: Steel
PIN: Stainless steel

FINISH
Zinc plated or black coated

V : 1

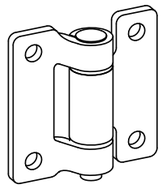

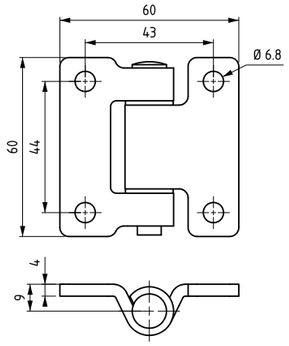

V : 2

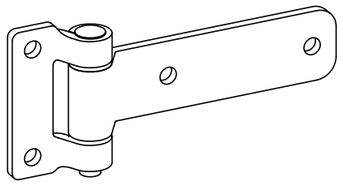

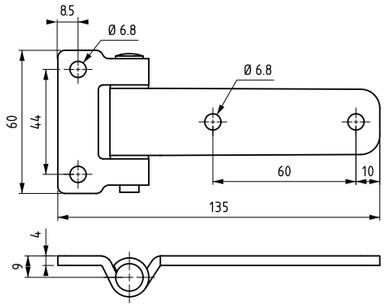

V : 3

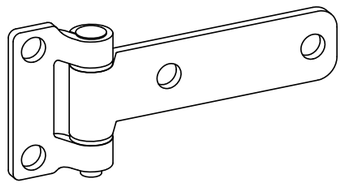

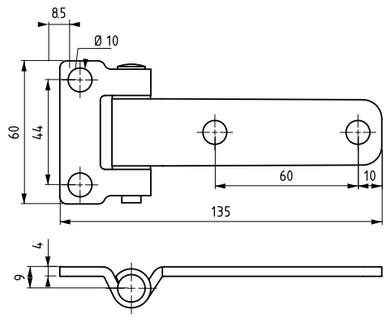

PRODUCT CODE

1609 - 6 - F - V

GROUP CODE | MATERIAL | FINISH | VERSION

MATERIAL	M
Steel	6

FINISH	F
Zinc plated	3
Black coated	2

Hinge Rotation Angle
0 180°

Note: Bolts are not supplied

www.METALIKA-KACIN.com

1609

LEAF HINGE

- **Stainless steel version: page 511**
- Generally, used for plain/flush mounted, isolated, heavy doors.
- Both parts are attached by screws or nuts and bolts
- Hinge Rotation angle is 180°

MATERIAL
BODY: Steel
PIN: Stainless steel

FINISH
Zinc plated or black coated

V : 4

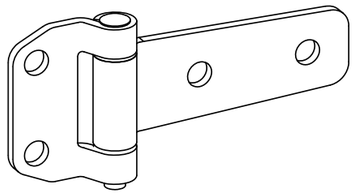

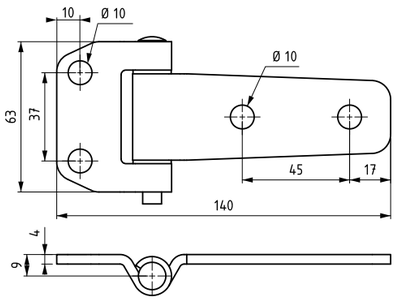

V : 5

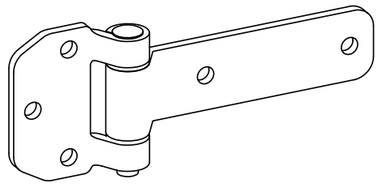

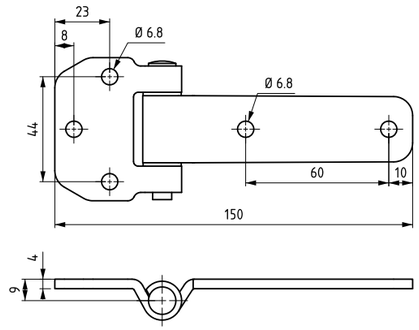

V : 6

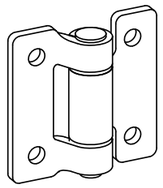

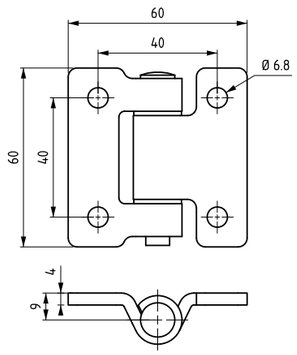

PRODUCT CODE

1609 - 6 - F - V

GROUP CODE | MATERIAL | FINISH | VERSION

MATERIAL	M
Steel	6

FINISH	F
Zinc plated	3
Black coated	2

Hinge Rotation Angle
0 180°

Note: Bolts are not supplied

www.METALIKA-KACIN.com

LEAF HINGE

809

- **Stainless steel version: page 509**
- Generally used for plain/ flush-mounted, isolated, heavy doors

MATERIAL
BODY: Steel
PIN: Stainless Steel

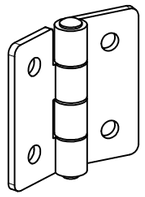

V : 1

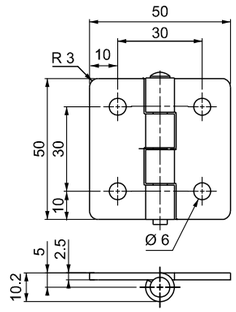

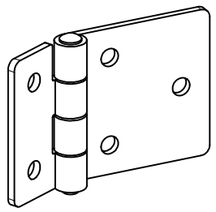

V : 2

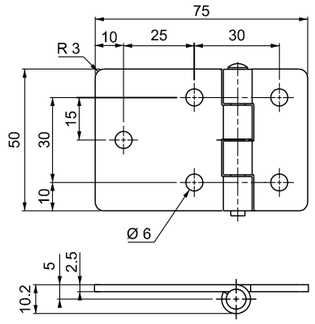

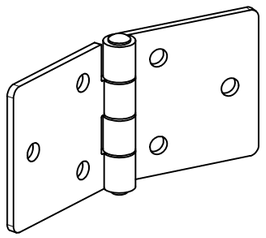

V : 3

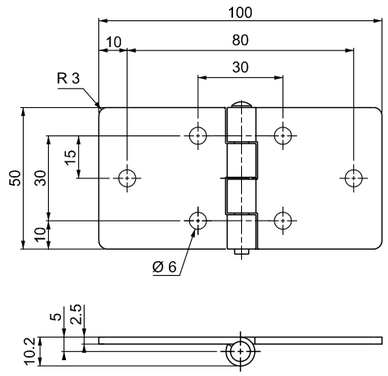

PRODUCT CODE

809 - 6 - F - V

GROUP CODE | MATERIAL | FINISH | VERSION

MATERIAL	M
Steel	6

FINISH	F
Zinc plated	3
Black coated	2

Hinge Rotation Angle

www.METALIKA-KACIN.com

TRUCK CARRIER HINGE

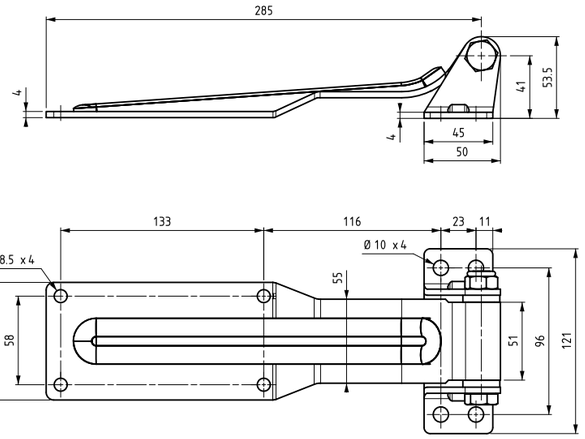

a)

MATERIAL AND FINISH	PRODUCT CODE
Steel – zinc plated	340.0.8024
Steel – black coated	340.0.8025

- Strong hinge used on doors of refrigerated truck carriers and trailers
- Opening angle 270°
- Provided as zinc plated or black-powder coated
- Suitable for left- and right-hand applications

MATERIAL
Frame part: Steel
Door part: Steel

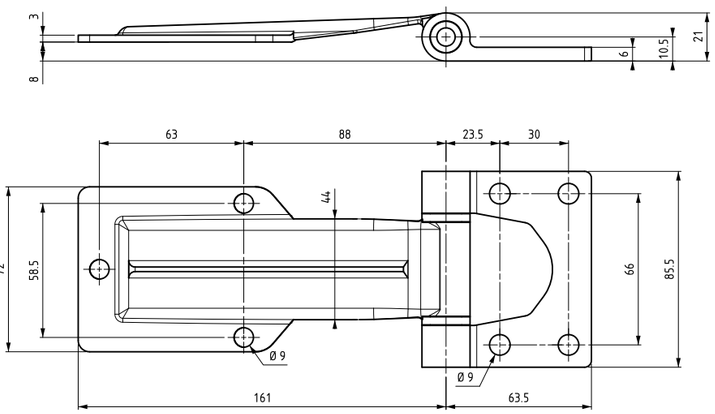

b)

MATERIAL AND FINISH	PRODUCT CODE
Steel – zinc plated	340.0.8023
Steel – black coated	340.0.8029

www.METALIKA-KACIN.com

Door Mountings

Continuous hinges, door retainers and handles

TILA continuous hinges

TILA continuous hinge

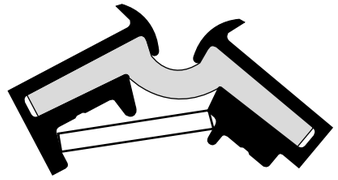

Advantages:

- Suitable for doors, tailgates, covers and flaps
- Only minimal external protrusion. A contribution towards road safety since the risk of injury caused by dangerous, protruding fittings, is eliminated
- Hinge and seal all-in-one - along the entire length
- Absolute precision - when in the closed position the two aluminium profiles interlock together. They can only be dismantled when the door, tailgate, cover are open. Forced entry can only be made by cutting the plastic profile, leaving behind visible evidence
- Virtually no wear
- Totally maintenance-free - has been in practical use for more than two decades, primarily in the bodywork and vehicle area, tried and tested
- Supplied ready-assembled in standard and special lengths (by request)

The Function

The „hinge“ takes a specially moulded plastic profile made from a special POLYURETHANE elastomer with permanent elasticity and high tear resistance.
Opening angles of more than 180° or 270° are achieved depending upon the profile design. Continuous stress when in the open position requires the use of a holding mechanism to keep the hinge open, e.g. in the case of doors - a Door retainer.

Potential Uses

Can be fitted to doors, tailgates, lids of all kind, as single element or as an add-on unit (for so-called folding or concertina designs), in bodywork and vehicle construction, for boot and van fixings, sales vehicles and buses etc. For use wherever flaps, lids and doors are required.

Installation

Is extremely simple since the TILA continuous hinge is supplied in the open position using spacers and with holes already pre-drilled, ready for installation.

1. Attach the TILA continuous hinge to door, flap or lid
2. Fit the installation element to the installation frame and attach the 2nd blade of the TILA continuous hinge to it
3. If you open the door, flap or lid further out the spacers fall out and the door, flap or lid is hinged and ready to use

As with many “synthetic“ materials, care should be taken when subjecting the hinge to specific and specialised influences which may have unexpected detrimental effects. These include, amongst others hydrolysis, microbe infestation, sudden mechanical stresses (e.g. sudden opening) in conjunction with extremely low temperatures, corrosive acids, alkaline solutions and cleaning agent additives.

Moreover, we would ask you to consult us if you have any enquiries so we can provide you with optimum advice.
The above mentioned technical data, information and recommendations are intended as a guide but is not binding! These reflect our latest knowledge at the time this product information was submitted for printing and does not exempt the user from carrying out their own precise examination of the potential uses for our products in each individual case.

www.METALIKA-KACIN.com

All technical specifications contained in this brochure are approximate and no guarantee is given as to their accuracy. Designs are subject to change.

TILA continuous hinges

TILA continuous hinge 22/180° „Super“

- Temperature resistant from approx. -40°C to approx. +80°C short periods +120°C
- Without any mechanical damage
- Hydrolysis and bacteria-resistant

Pack Size: 2 off Sealed in plastic wrapping.
Materials: Aluminium clamping profile AlMgSi 0.5, anodised, E6 EV1, matt silver colour, Polyurethane elastomer plastic profile, black

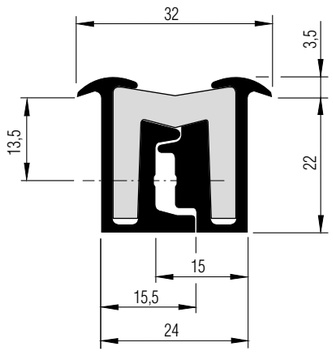

Length[1] [mm]	Installation width [mm]	depth [mm]	Hole ø [mm]	gap [mm]	Holes [Pieces]	Weight approx. [kg/each]	Article No.
1800	24	22	4	100	18	1.900	631 218
2000	24	22	4	100	20	2.100	631 220
2200	24	22	4	100	22	2.350	631 222
2400	24	22	4	100	24	2.550	631 224
2700	24	22	4	100	27	3.000	631 227
3000	24	22	4	100	30	3.250	631 230

[1] Special lengths/special bores and distances between holes available on request

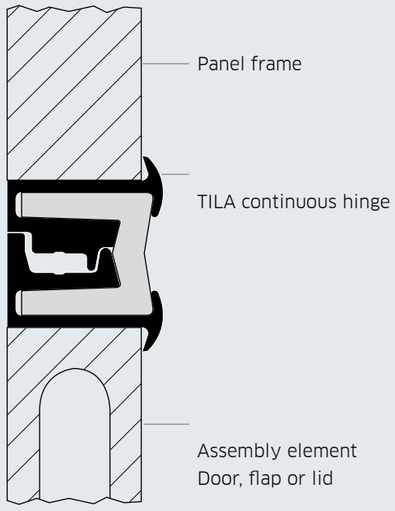

Figure 2

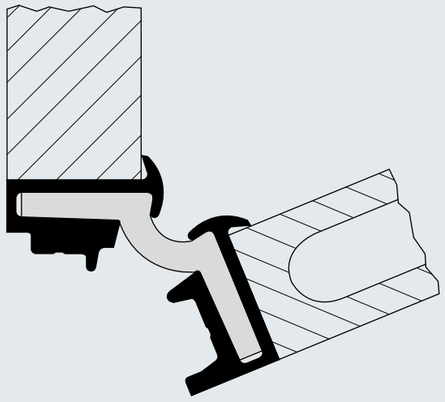

Figure 3

Suggested installation, non-binding - particularly important for flaps and lids.
The TILA 22/180° continuous hinge should be installed as shown in Figure 2 and 3.
Note the correct arrangement of the various aluminium clamping profiles on the panel and assembly element.

TILA continuous hinge drawings shown in the scale of 1:1.

www.METALIKA-KACIN.com
All technical specifications contained in this brochure are approximate and no guarantee is given as to their accuracy. Designs are subject to change.

TILA continuous hinges

TILA continuous hinge 29/180° „Super“

- Temperature resistant from approx. -40°C to approx +80°C, short periods +120°C
- Without any mechanical damage
- Hydrolysis and bacteria-resistant

Pack Size: 2 off sealed in plastic wrapping.
Materials: Aluminium clamping profile AlMgSi 0.5, anodised, E6 EV1, matt silver colour[1], Polyuethane elastomer plastic profile, black

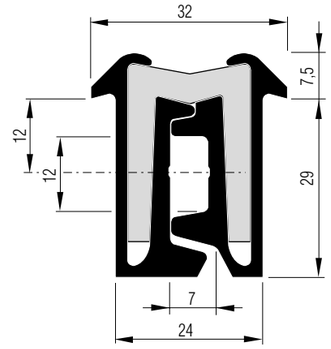

Length[1] [mm]	Installation width [mm]	depth [mm]	Hole ø [mm]	gap [mm]	Holes [Pieces]	Weight approx. [kg/each]	Article No.
1800	24	29	5.0	200	9	2.600	631 238
2000	24	29	5.0	200	10	2.900	631 240
2200	24	29	5.0	200	11	3.150	631 242
2400	24	29	5.0	200	12	3.450	631 244
2500	24	29	5.0	200	13	3.800	631 245
2700	24	29	5.0	200	13	4.100	631 247
3000	24	29	5.0	200	15	4.600	631 250
3500	24	29	5.0	200	17	5.400	631 255

[1] Special lengths/special bores and distances between holes available on request

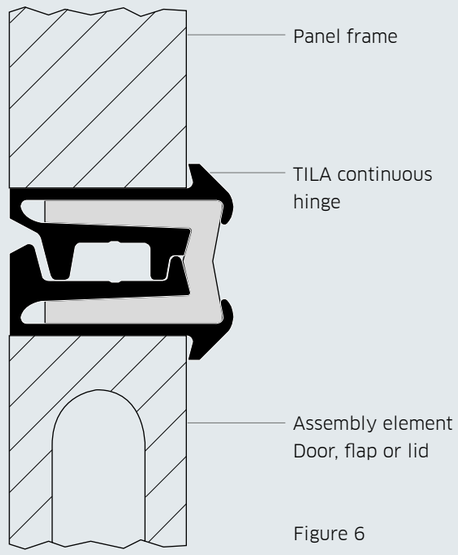

Figure 6

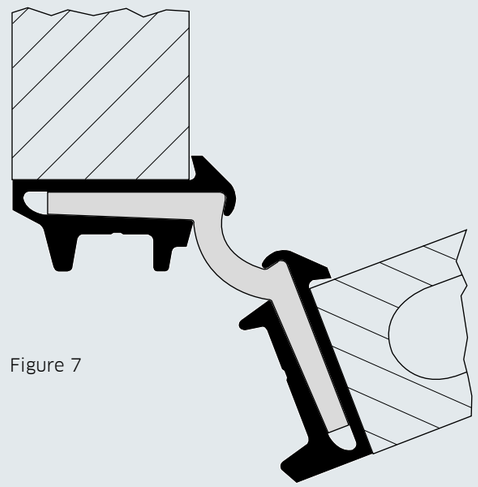

Figure 7

Suggested installation, non-binding - particularly important for flaps and lids.
Note the correct arrangement of the various aluminium clamping profiles on the panel and assembly element!

TILA continuous hinge drawings shown in the scale of 1:1.

www.METALIKA-KACIN.com
All technical specifications contained in this brochure are approximate and no guarantee is given as to their accuracy. Designs are subject to change.

TILA continuous hinges

TILA continuous hinge 29/270° „Super“

This TILA continuous hinge offers a 270° opening angle.
The non-binding installation suggestions set out below, using the example of a rear door and frame assembly on a commercial vehicle, clearly show:

- Door outer surface flush with the corner post, giving longer loading area
- „Knuckle“ hinge - rear protrusion only approx. 11 mm: An advantage for trailers with short coupling systems!
- Temperature resistant from approx. -40°C to approx. +80°C, short periods +120°C
- Without any mechanical damage. Hydrolysis and bacteria-resistant.

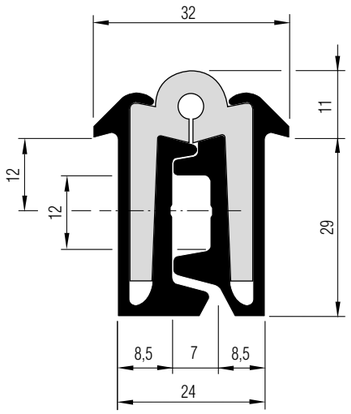

Pack Size: 2 off sealed in plastic wrapping.
Materials: Aluminium clamping profile AlMgSi 0.5, anodised, E6 EV1, matt silver colour, Polyurethane elastomer plastic profile, black

Length[1] [mm]	Installation width [mm]	depth [mm]	Hole ø [mm]	gap [mm]	Holes [Pieces]	Weight approx. [kg/each]	Article No.
2200	24	29	5.0	200	11	3.230	631 262
2500	24	29	5.0	200	13	3.900	631 265
3000	24	29	5.0	200	15	4.700	631 270

[1] Special lengths/special bores and distances between holes available on request

Using the example of a rear door assembly:
Door designed for 270° opening to the side panel.
Door retainer required to keep door held in the open position.

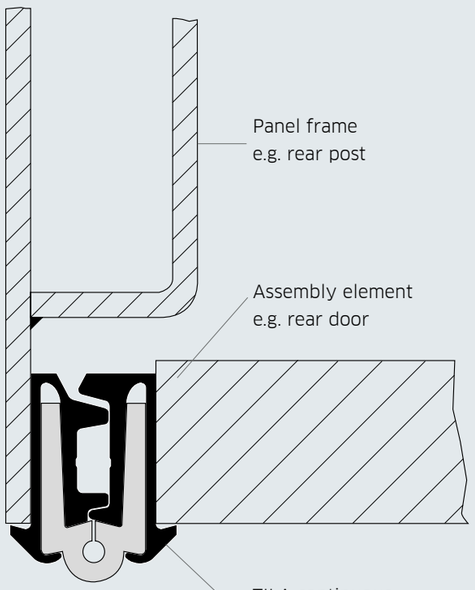

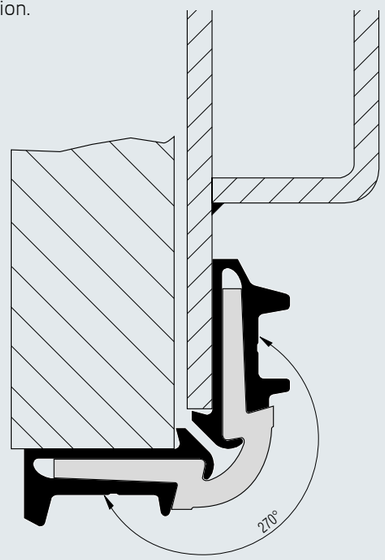

TILA continuous hinge drawings shown in the scale of 1:1.

www.METALIKA-KACIN.com
All technical specifications contained in this brochure are approximate and no guarantee is given as to their accuracy. Designs are subject to change.

Aluminium continuous hinges

Aluminium profile hinge

Suitable solely for horizontal hinged flaps and lids - not for doors! Absolute precision, must only be dismantled in the open position!

Length: 6000 mm
Material: Aluminium AlMgSi 0.8, F28
Flap profile (631 402) mill finish
Frame profile (631 404) anodised
E6 EV1, matt silver colour
Weight: Combined (both profiles) approx. 1.100 kg/m
Article No. **631 402** – Flap profile
631 404 – Frame profile

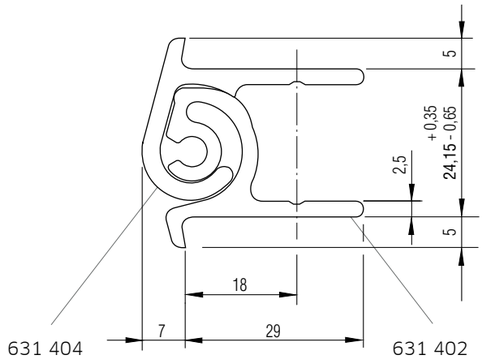

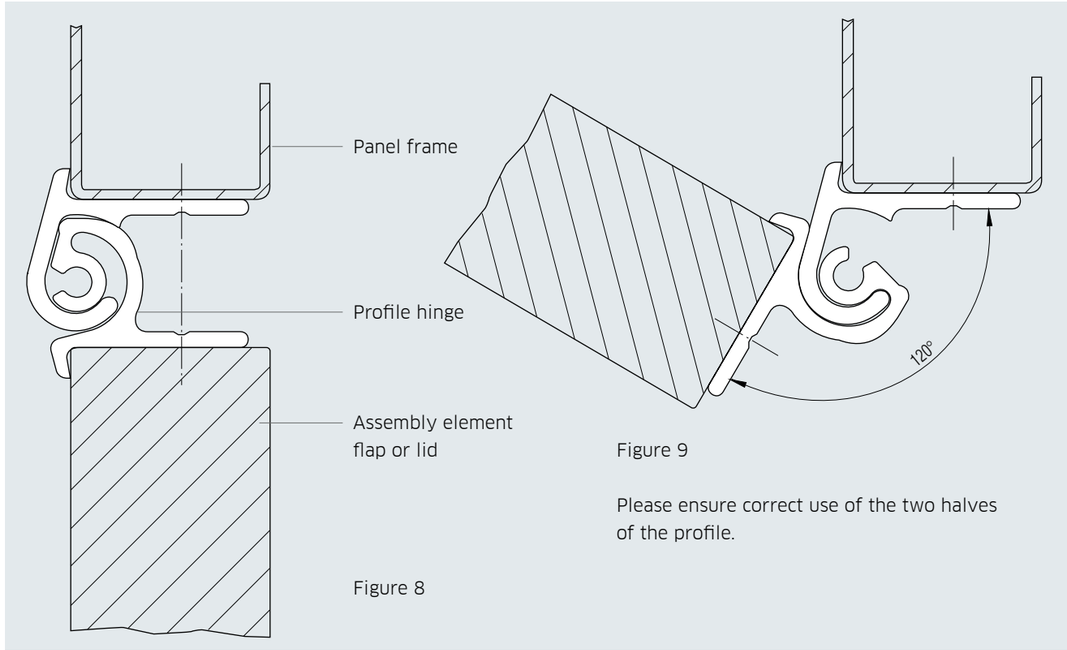

Figure 8

Figure 9

Please ensure correct use of the two halves of the profile.

Rainwater channels

The frame profile Article No. 631 404 is ideal for use as a rainwater channel. See adjacent diagram:

Length: 6000 mm
Material: AlMgSi 0.8, F28, anodised, E6 EV1, colour silver
Weight: approx. 0.500 kg/m

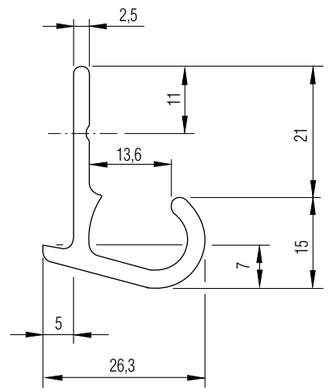

631 404

TILA continuous hinge drawings shown in the scale of 1:1.

www.METALIKA-KACIN.com
All technical specifications contained in this brochure are approximate and no guarantee is given as to their accuracy. Designs are subject to change.

Continuous hinges 180° isosceles, straight

Equal hinge (isosceles), straight

- Both blades without joggle
- Blade ends rounded, with spherical grease nipple (DIN 714)
- Hinge blades non-drilled
- Knuckle pin height 16 mm
- Hinge pin dia. 8 mm
- Opening angle 180°

Material: Steel, electro galvanised Hinge pin - brass
Weight: approx. 0.280 kg/each
Article No. 631 295

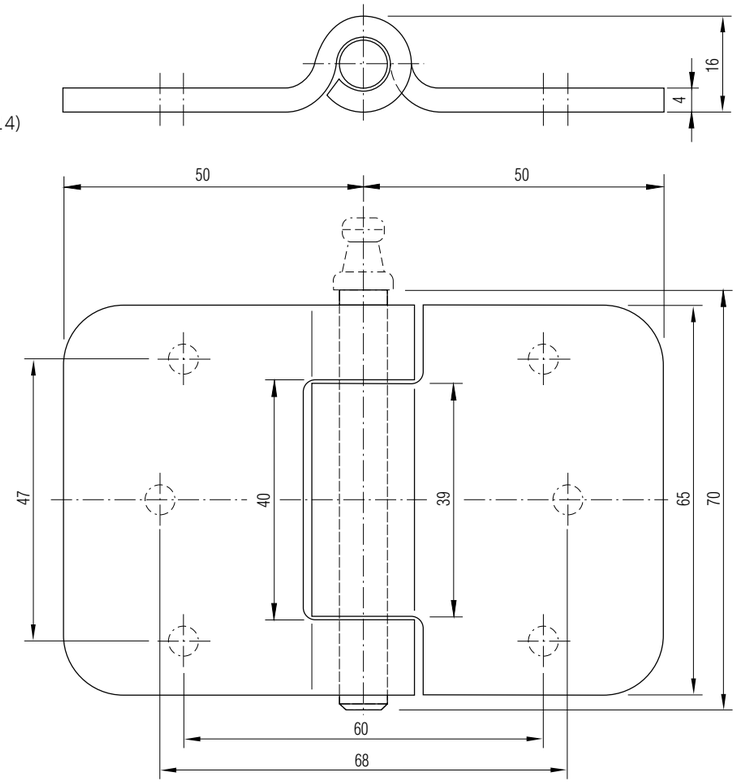

Equal hinge (isosceles), straight

As above, but with 3 fixing holes, dia. 5.5 mm per blade, but without grease nipple

Article No. 631 297

Equal hinge (isosceles), straight

- Both blades without joggle
- Six fixing holes dia. 4.5 mm

Knuckle pin height: 9.5 mm
Hinge pin ø: 5 mm
Opening angle: 180°
Material: Stainless steel
Weight: approx. 0.060 kg/each
Article No. 631 299

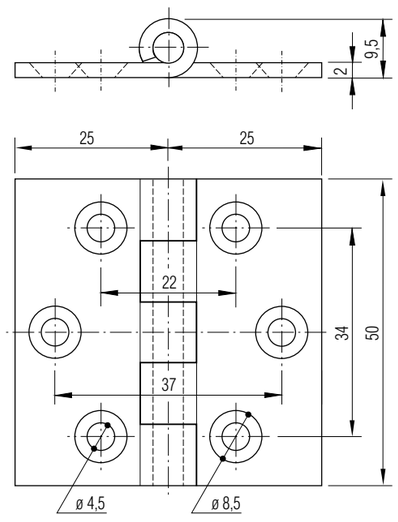

All technical specifications contained in this brochure are approximate and no guarantee is given as to their accuracy. Designs are subject to change.

www.METALIKA-KACIN.com

Continuous hinges 180° isosceles, with joggle

Equal hinge (isosceles), with joggle

With open knuckle
- Blade ends rounded and with spray grease nipple
- Hinge blades non-drilled

Hinge pin ø: 8 mm
Opening angle: 180°
Material: Steel, electro galvanised
Weight: approx. 0.570 kg/each
Article No. 631 310

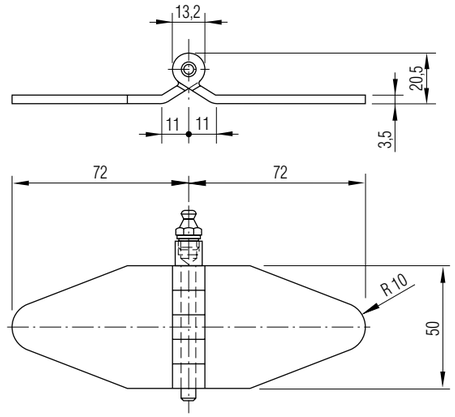

Equal hinge (isosceles), with joggle

- Blade ends rounded and with spray grease nipple
- Hinge blades non-drilled

Hinge pin ø: 8 mm,
Opening angle: 180°
Material: Steel, electro galvanised
Weight: approx. 0.780 kg/each
Article No. 631 315

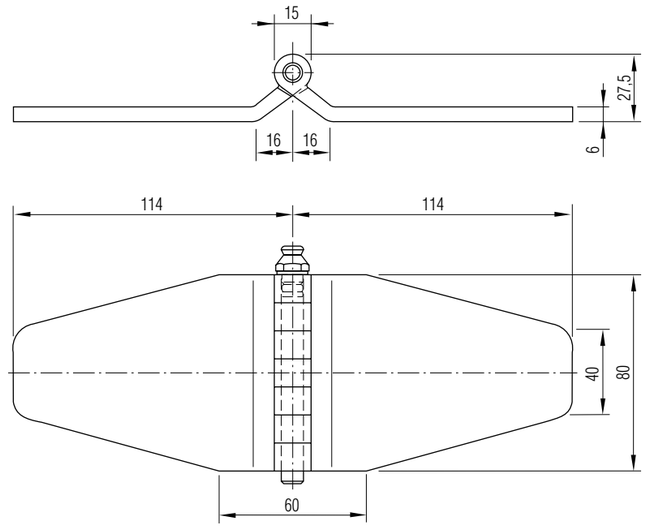

All technical specifications contained in this brochure are approximate and no guarantee is given as to their accuracy. Designs are subject to change.

www.METALIKA-KACIN.com

Continuous hinges 180° Type 115 and 122, straight

Hinge 115 straight

- Both blades without joggle
- Blade ends rounded, without grease nipple
- Three fixing holes, ø 6.5 mm
- Material thickness 4 mm
- Knuckle pin height 16 mm
- Hinge pin, ø 8 mm
- Opening angle 180°

Material:	Steel, electro galvanised
Weight:	approx. 0.400 kg/each
Article No.	631 307

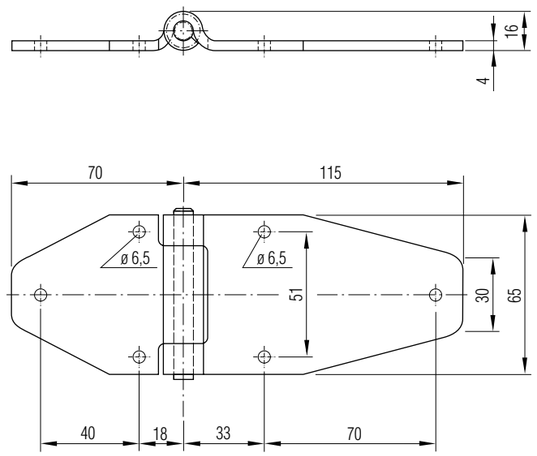

Hinge 115 straight

As above, but with grease nipple

Material thickness:	2.5 mm
Height:	14.5 mm
Material:	Stainless steel, polished
Weight:	approx. 0.245 kg/each
Article No.	631 306

Hinge 122 straight

- Both blades without joggle
- Blade ends rounded
- Long blade with 3 fixing holes, ø 7 mm
- Short blade with 4 fixing holes, ø 7 mm
- Hinge pin, ø 8 mm
- Opening angle 180°

Material:	Steel, electro galvanised
Weight:	approx. 0.530 kg/each
Article No.	631 328

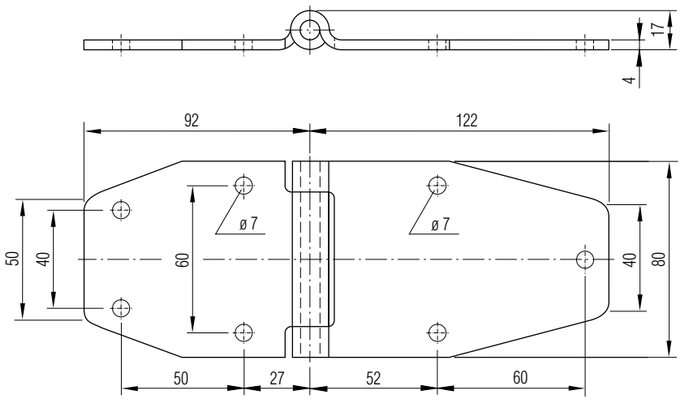

Hinge 122 straight

As above, but

Material:	Stainless steel, polished
Weight:	approx. 0.325 kg/each
Article No.	631 327

All technical specifications contained in this brochure are approximate and no guarantee is given as to their accuracy. Designs are subject to change.

www.METALIKA-KACIN.com

Continuous hinges 180° Type 78 and 100, straight

Hinge 78 straight

- Short and long blade without joggle
- Blade ends rounded
- Two fixing holes, ø 6.5 mm
- Hinge pin dia. 8 mm
- Opening angle 180°

Material:	Steel, electro galvanised
Weight:	approx. 0.179 kg/each
Article No.	631 316

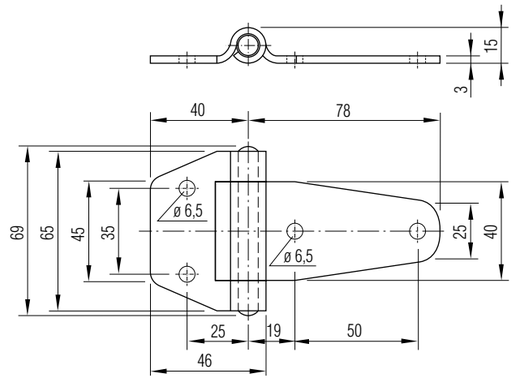

Hinge 78 straight

As above, but

Material:	Stainless steel, polished
Article No.	631 317

Hinge 100 straight

- Short and long blade without joggle
- Blade ends rounded
- Two fixing holes, ø 6,5 mm

Hinge pin ø:	8 mm
Opening angle:	180°
Material:	Steel, galvanised
Weight:	ca. 0.270 kg/each
Article No.	631 301

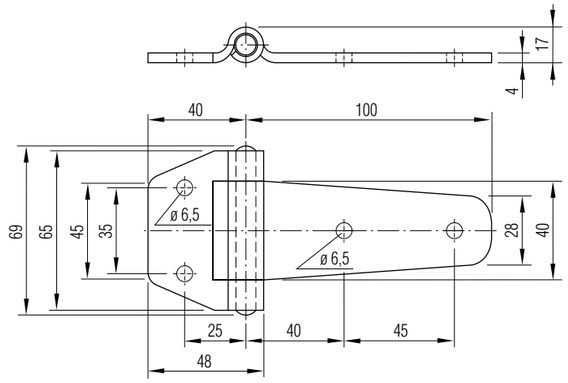

Hinge 100 straight

As above, but

Material:	Stainless steel, polished
Article-No.	631 303

All technical specifications contained in this brochure are approximate and no guarantee is given as to their accuracy. Designs are subject to change.

www.METALIKA-KACIN.com

Continuous hinges 180° Type 105, straight

Hinge 105 straight

- Short and long blade without joggle
- Four fixing holes, ø 6.5 mm
- Knuckle pin, ø 16 mm
- Knuckle pin height 17 mm
- Hinge pin, ø 8 mm
- Opening angle 180°

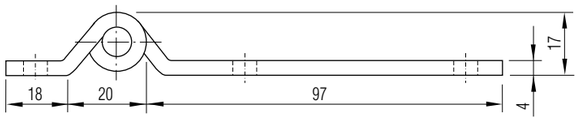

Material: Steel, electro galvanised
Weight: approx. 0.195 kg/each
Article No. 631 318

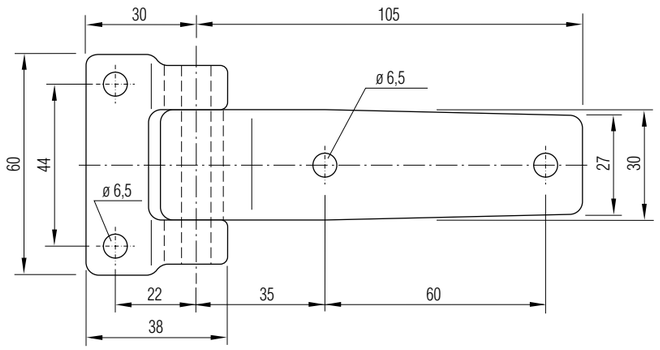

Hinge 105 straight

As above, but

Material: Stainless steel, polished
Article No. 631 319

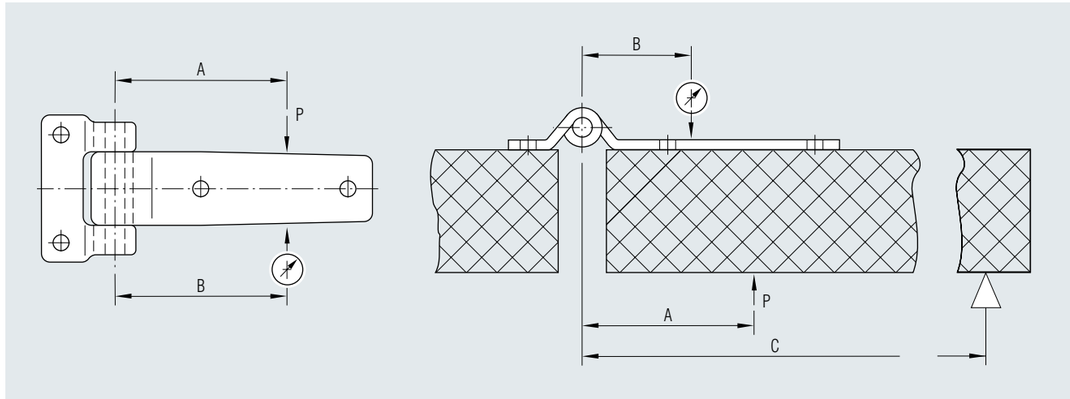

Fixing data (applicable for stainless steel version 631 319)

Fig.	Load	P = max. load when functioning properly [kg]	Max. deformation flexibility range [mm]	permanent deformation [mm]	A = distance between hinge pin and load point [mm]	B = distance between hinge pin and test point [mm]	C = distance between hing pin and abutment (fixing point) [mm]
1	Flexing (vertical)	50	1.0	0.10	115	115	–
2	Pressure (internal)	280	1.3	0.09	90	75	470

All technical specifications contained in this brochure are approximate and no guarantee is given as to their accuracy. Designs are subject to change

Continuous hinges 180° Type 115, with joggle

Hinge 115 with joggle

- Short blade without joggle, long blade with joggle
- Four fixing holes, ø 6.5 mm
- Material thickness 7 mm
- Knuckle pin, ø 16 mm
- Knuckle pin height 17 mm
- Hinge pin, ø 8 mm
- Opening angle 180°

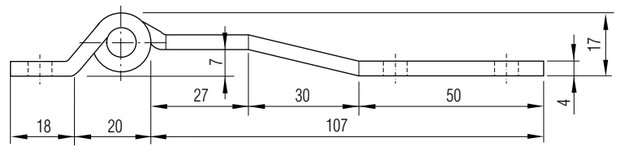

Material: Steel, electro galvanised
Weight: approx. 0.200 kg/each
Article No. 631 308

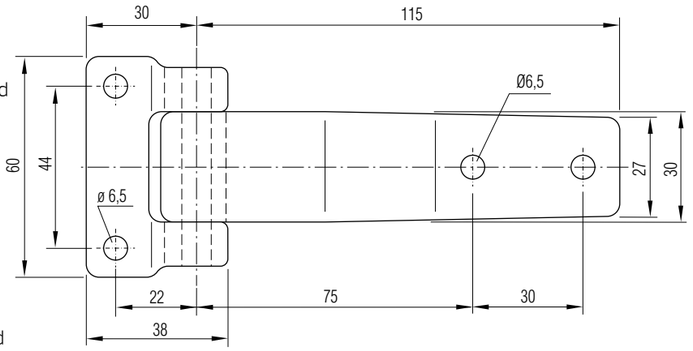

Hinge 115 with joggle

As above, but

Material: Stainless steel, polished
Article No. 631 309

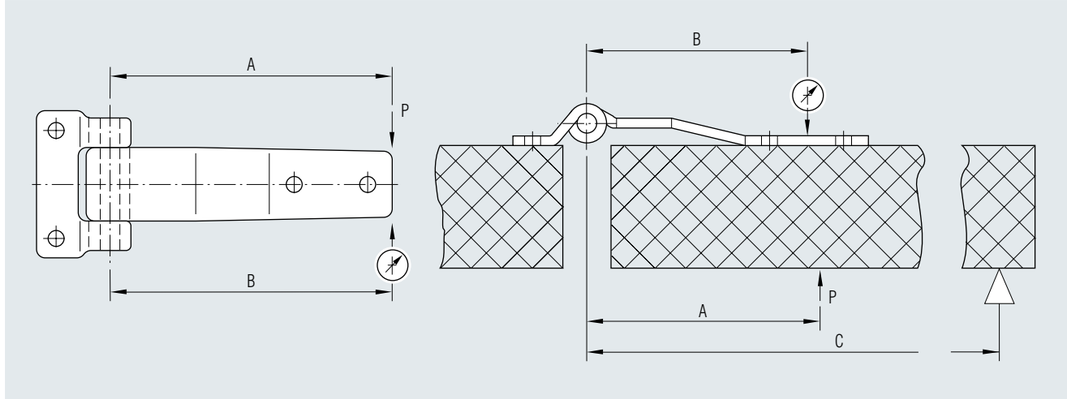

Fixing data (applicable for stainless steel version 631 309)

Fig.	Load	P = max. load when functioning properly [kg]	Max. deformation flexibility range [mm]	permanent deformation [mm]	A = distance between hinge pin and load point [mm]	B = distance between hinge pin and test point [mm]	C = distance between hing pin and abutment (fixing point) [mm]
1	Flexing (vertical)	35	1.0	0.1	115	115	–
2	Pressure (internal)	35	1.2	0.1	95	90	470

All technical specifications contained in this brochure are approximate and no guarantee is given as to their accuracy. Designs are subject to change

Continuous hinges 180° Type 108, straight

Hinge 108 straight

- Short and long blade without joggle
- Short blade angled on the width sides
- Long blade with 2 reinforcement ribs
- Four fixing holes, ø 6.5 mm
- Knuckle pin height 14 mm
- Hinge pin, ø 6 mm
- Opening angle 180°

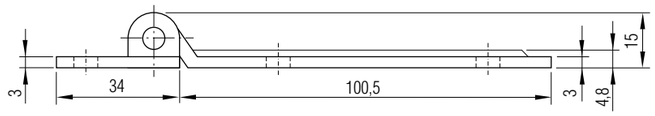

Material: Steel, electro galvanised
Weight: approx. 0.140 kg/each
Article No. 631 311

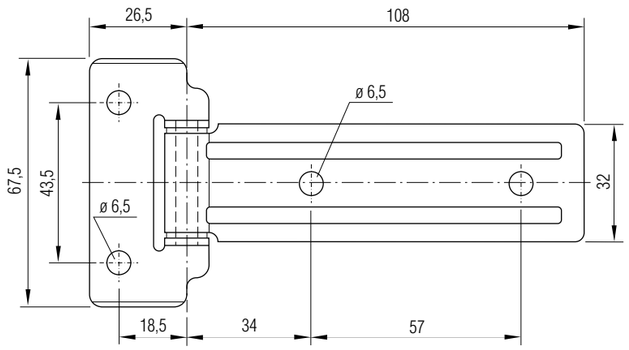

Hinge 108 straight

As above, but

Material: Stainless steel, polished
Article No. 631 313

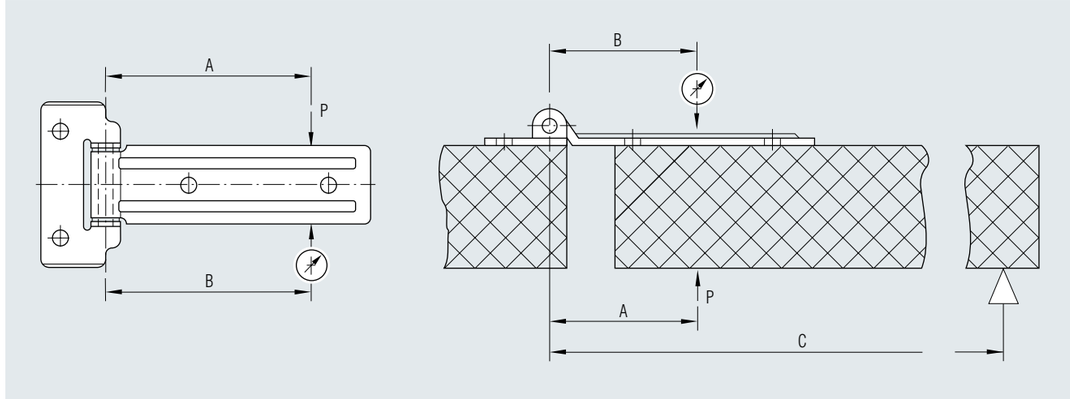

Fixing data (applicable for stainless steel version 631 313)

Fig.	Load	P = max. load when functioning properly [kg]	Max. deformation flexibility range [mm]	permanent deformation [mm]	A = distance between hinge pin and load point [mm]	B = distance between hinge pin and test point [mm]	C = distance between hing pin and abutment (fixing point) [mm]
1	Flexing (vertical)	18	1.60	0.20	84	84	–
2	Pressure (internal)	150	0.95	0.11	60	60	440

All technical specifications contained in this brochure are approximate and no guarantee is given as to their accuracy. Designs are subject to change

Continuous hinges 180° Type 129, with joggle

Hinge 129 with joggle

- Short blade without joggle, angled on the width sides for stabilisation
- Long blade with joggle, 7 mm high, with 2 reinforcement ribs
- Four fixing holes , ø 6.5 mm
- Knuckle pin height 14 mm
- Hinge pin, ø 6 mm

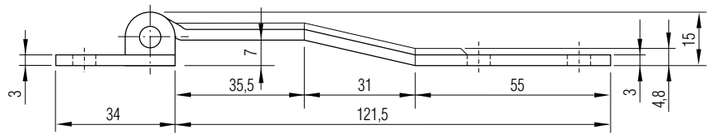

Material: Steel, electro galvanised
Weight: approx. 0.160 kg/each
Article No. 631 312

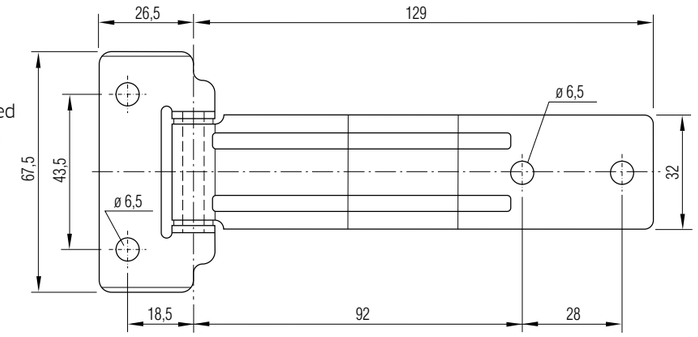

Hinge 129 with joggle

As above, but

Material: Stainless steel, polished
Article No. 631 314

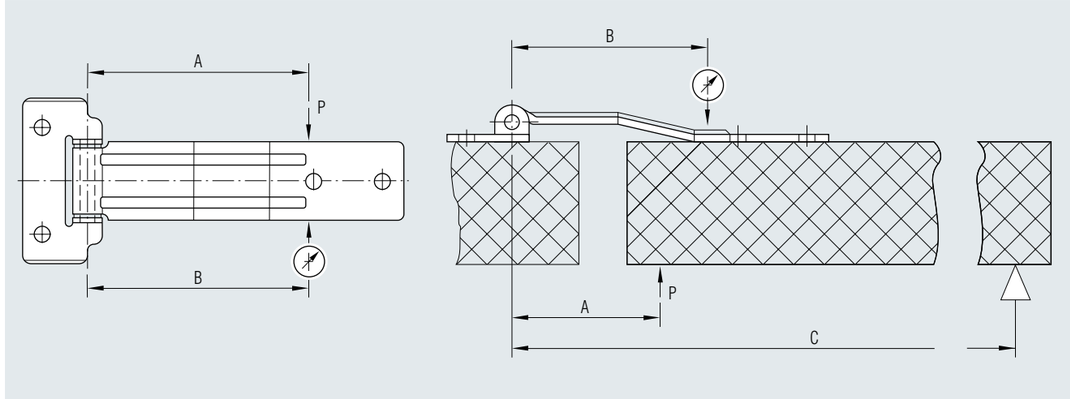

Fixing data (applicable for stainless steel version 631 314)

Fig.	Load	P = max. load when functioning properly [kg]	Max. deformation flexibility range [mm]	permanent deformation [mm]	A = distance between hinge pin and load point [mm]	B = distance between hinge pin and test point [mm]	C = distance between hing pin and abutment (fixing point) [mm]
1	Flexing (vertical)	30	1.2	0.2	90	90	–
2	Pressure (internal)	30	3.0	0.1	60	60	440

All technical specifications contained in this brochure are approximate and no guarantee is given as to their accuracy. Designs are subject to change

Continuous hinges 180° Type 140, with joggle

Hinge 140 with joggle

- Short blade without joggle
- Long blade with joggle, 7 mm high, with 2 reinforcement ribs
- Five fixing holes, ø 8.5 mm

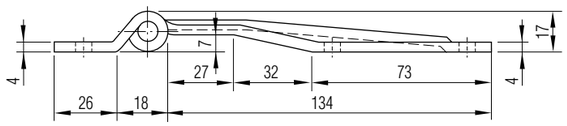

Knuckle pin ø:	16 mm
Knuckle pin height:	17 mm
Hinge pin ø:	8 mm
Material:	Steel, electro galvanised
Weight:	approx. 0.410 kg/each
Article No.	631 326

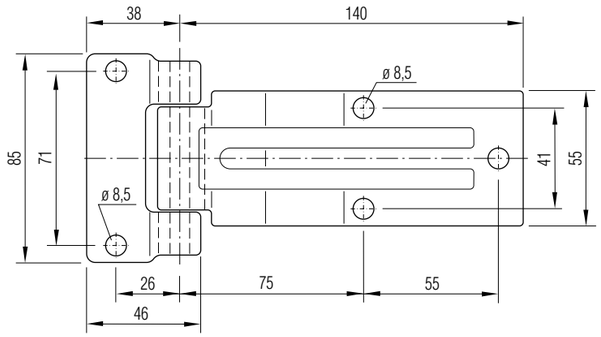

Hinge 140 with joggle

As above, but

Material:	Stainless steel, polished
Article No.	631 325

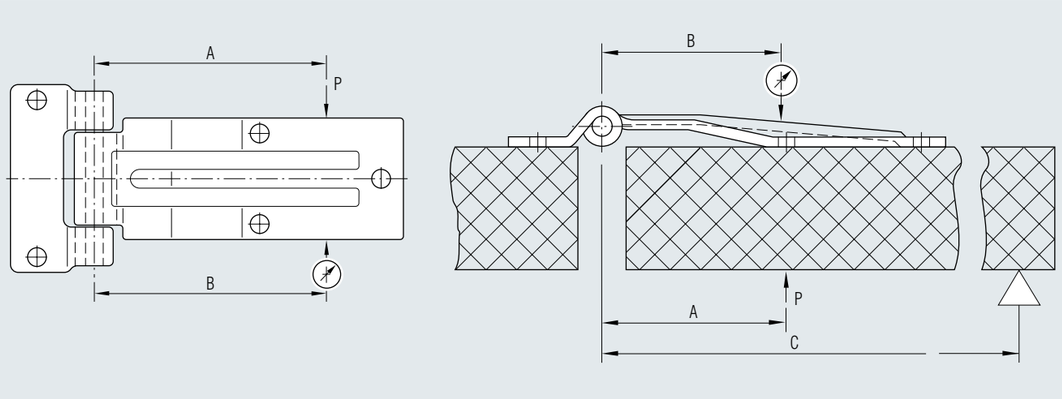

Fixing data (applicable for stainless steel version 631 325)

Fig.	Load	P = max. load when functioning properly [kg]	Max. deformation flexibility range [mm]	permanent deformation [mm]	A = distance between hinge pin and load point [mm]	B = distance between hinge pin and test point [mm]	C = distance between hing pin and abutment (fixing point) [mm]
1	Flexing (vertical)	150	1.3	0.1	105	105	–
2	Pressure (internal)	190	1.6	0.1	75	73	460

All technical specifications contained in this brochure are approximate and no guarantee is given as to their accuracy. Designs are subject to change

www.METALIKA-KACIN.com

Continuous hinges 180° Type 165, straight

Hinge 165 straight

- Short and long blade without joggle
- Long blade with 2 reinforcement ribs
- Five fixing holes, ø 8.5 mm

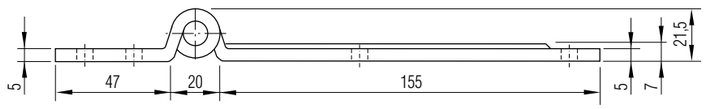

Knuckle pin ø:	20 mm
Knuckle pin height:	21.5 mm
Hinge pin ø:	10 mm
Material:	Steel, electro galvanised
Weight:	approx. 0.820 kg/each
Article No.	631 321

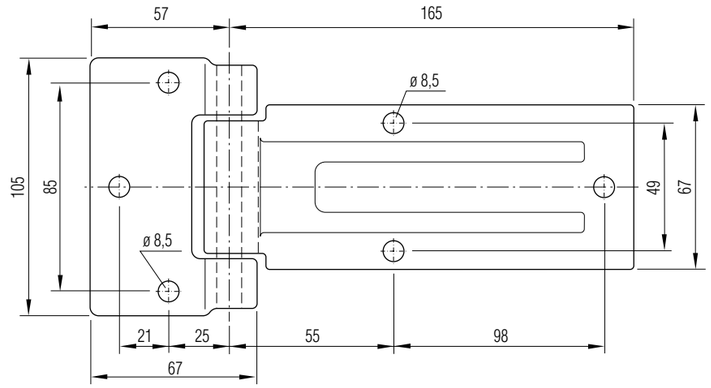

Hinge 165 straight

As above, but

Material:	Stainless steel, polished
Article No.	631 323

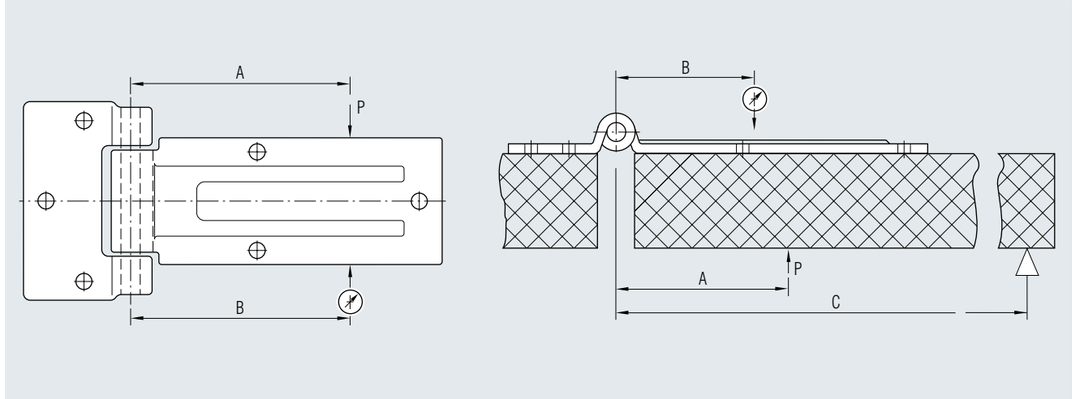

Fixing data (applicable for stainless steel version 631 314)

Fig.	Load	P = max. load when functioning properly [kg]	Max. deformation flexibility range [mm]	permanent deformation [mm]	A = distance between hinge pin and load point [mm]	B = distance between hinge pin and test point [mm]	C = distance between hing pin and abutment (fixing point) [mm]
1	Flexing (vertical)	170	1.53	0.10	116	116	–
2	Pressure (internal)	600	1.66	0.07	91	73	470

All technical specifications contained in this brochure are approximate and no guarantee is given as to their accuracy. Designs are subject to change

www.METALIKA-KACIN.com

Continuous hinges 180° Type 185, with joggle

Hinge 185 with joggle

- Short blade without joggle
- Long blade with joggle, 7 mm high, with 2 reinforcement ribs
- Five fixing holes, ø 8.5 mm

Knuckle pin ø:	20 mm
Knuckle pin height:	21.5 mm
Hinge pin ø:	10 mm
Material:	Steel, electro galvanised
Weight:	approx. 0.880 kg/each
Article No.	631 322

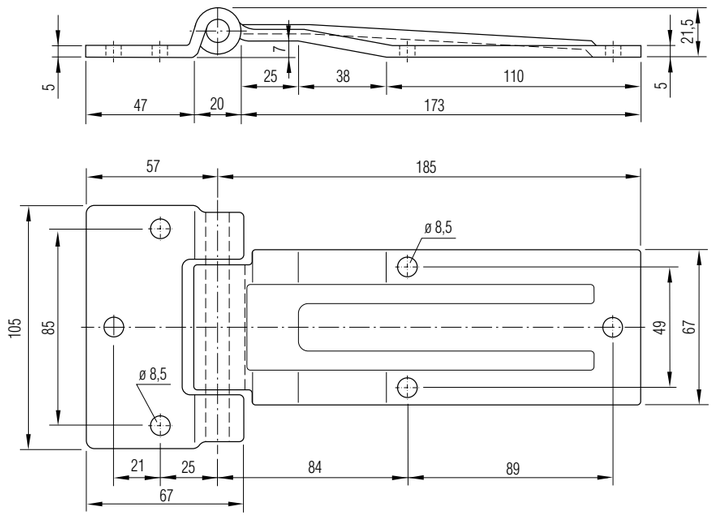

Hinge 185 with joggle

As above, but

Material:	Stainless steel, polished
Article No.	631 324

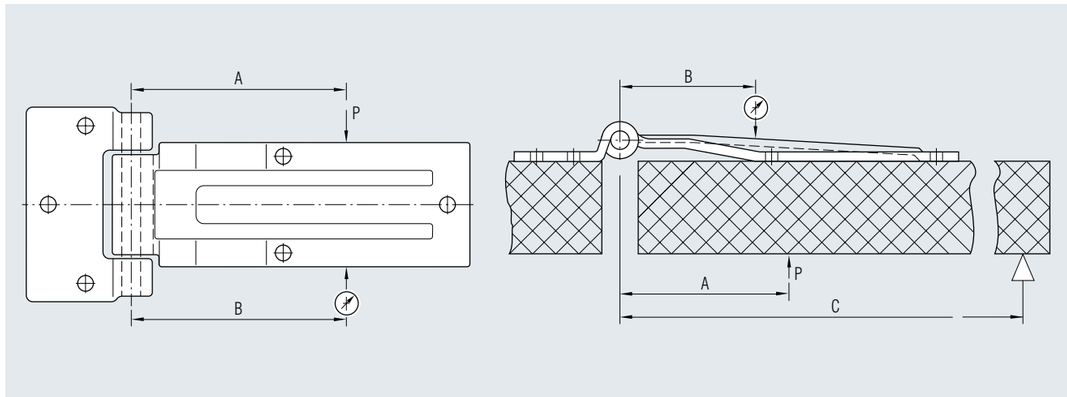

Fixing data (applicable for stainless steel version 631 324)

Fig.	Load	P = max. load when functioning properly [kg]	Max. deformation flexibility range [mm]	permanent deformation [mm]	A = distance between hinge pin and load point [mm]	B = distance between hinge pin and test point [mm]	C = distance between hing pin and abutment (fixing point) [mm]
1	Flexing (vertical)	180	1.2	0.1	116	116	-
2	Pressure (internal)	210	1.6	0.1	91	73	470

www.METALIKA-KACIN.com
All technical specifications contained in this brochure are approximate and no guarantee is given as to their accuracy. Designs are subject to change.

Continuous hinges 180° Recessed lid stay set

Hinge blade 152 with joggle

- 9 mm high, smooth
- Three fixing holes, ø 6.5 mm

Knuckle pin ø:	15 mm
Knuckle pin height:	19.5 mm
Hinge pin ø:	8 mm
Material:	631 330 – Aluminium, mill finish 631 332 – Aluminium, anodised[1]
Weight:	approx. 0.150 kg/each
Article No.	631 330 – Aluminium, mill finish 631 332 – Aluminium, anodised[1]
Replacement part:	Hinge bushing, grey - Article No. 631 339

[1] Packed in polybag

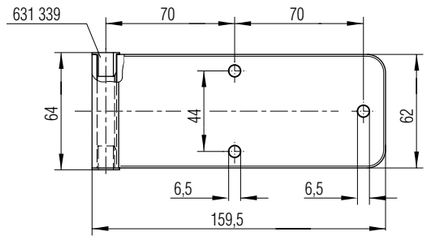

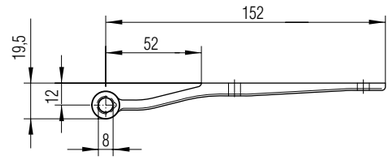

Plastic washer

- Accessories for hinge 631 330/332.

Material thickness:	4 mm
Article No.	631 338

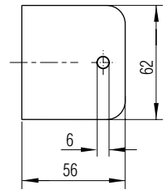

Hinge bracket 32 mm

- Screw-on hinge bracket.
- Two different installation options,
- see diagram on page 63.02.01.14

Material:	631 334, Steel, electro galvanised 631 335, Stainless steel
Weight:	approx 0.078 kg/each
Article No.	631 334 631 335

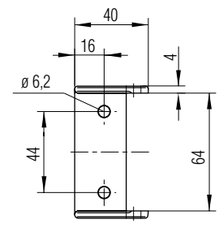

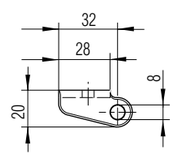

www.METALIKA-KACIN.com
All technical specifications contained in this brochure are approximate and no guarantee is given as to their accuracy. Designs are subject to change.

Continuous hinges 180° Type 152, with joggle

Hinge bolts, galvanised

Hexagonal screw DIN 931 8.8 M 8 x 85

Material: Steel, galvanised
Weight: approx. 0.040 kg/each
Article No. 631 337

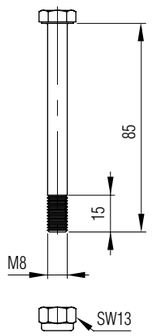

Hinge bolts stainless steel

Comprising:
socket head cap screw with 6 mm socket,
circlip and M 8 hexagon nut

Material: Stainless steel
Weight: approx. 0.045 kg/each
Article No. 631 336

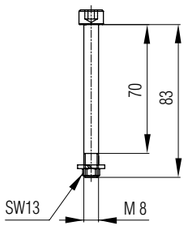

Assembly example

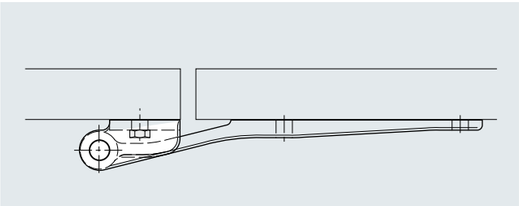

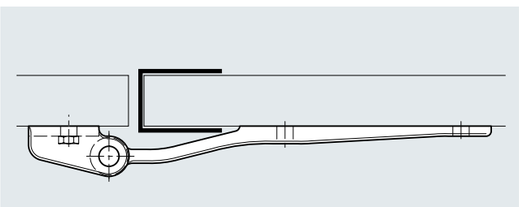

www.METALIKA-KACIN.com

All technical specifications contained in this brochure are approximate and no guarantee is given as to their accuracy. Designs are subject to change.

Continuous hinges 270° Type 220

Hinge blade 220/270°

- Particularly attractive design
- Strong reinforcing ribs
- Knuckle with injection moulded plastic sockets with outer collars - minimal friction against the bracket eyes
- Self-lubricating effect for the bolts

Material: Stainless steel, polished
Weight: approx. 0.560 kg/each
Article No. 631 565

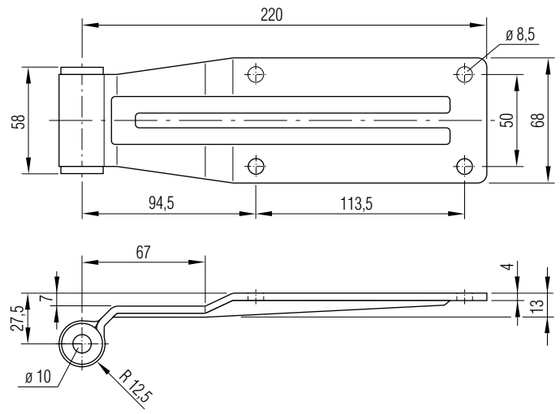

Strength data for hinge blade 631 565 in combination with the hinge bracket 631 666, applicable for the material stainless steel

Bending load (vertical)

Hinge blade Article No.	F = max. load when functioning properly [kg]	max. deformation flexibility range [mm]	residual deformation [mm]
631 565	65	2.3	0.3

Pressure load (internal) hinge blade 631 565

Hinge blade Article No.	F = max. load when functioning properly [kg]	max. deformation flexibility range [mm]	residual deformation [mm]
631 666	160	2.4	0.25

Alternating cyclic load (horizontal, stress / tensile)
F = max. load when working perfectly 450 kg

Article No.	D = max. deformation flexibility range [mm]	residual deformation [mm]	E = max. deformation flexibility range [mm]	residual deformation [mm]
631 565	0.93	0.13	–	–
631 666	–	–	0.10	0.01

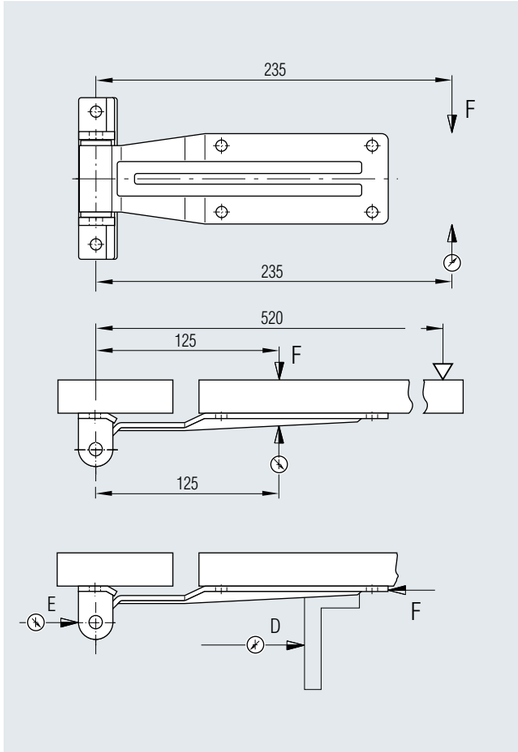

www.METALIKA-KACIN.com

All technical specifications contained in this brochure are approximate and no guarantee is given as to their accuracy. Designs are subject to change.

Continuous hinges 270° Accessories for hinge type 220

Hinge bracket 27 mm

- Screw-on hinge bracket. Extra slim design. The angle of the base plate alloows for the use of wide external seals on the frame side
- Eyes welded onto the baseplate

Material:	Stainless steel, polished
Weight:	approx. 0.190 kg/each
Article No.	631 666

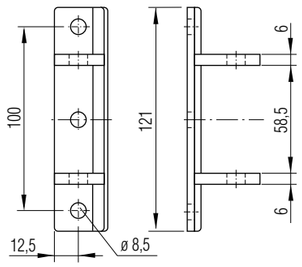

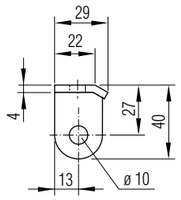

Assembly example

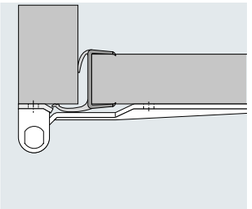

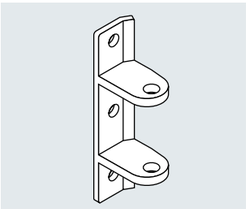

Hinge bolt

- Bolt located securely in the bracket eye
- The blade knuckle rotates around the bolt
- Head with parallel surfaces for wrenches
- With nut and lock nut, M 10 thread

Material:	Stainless steel
Weight:	approx. 0.070 kg/each
Article No.	631 722

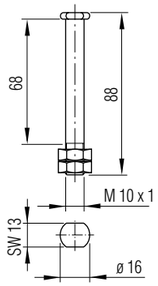

All technical specifications contained in this brochure are approximate and no guarantee is given as to their accuracy. Designs are subject to change.

www.METALIKA-KACIN.com

Continuous hinges 270° Type 280

Hinge blade 280/270°

- Extremely robust
- Strong reinforcing ribs, raised up to the hinge knuckle
- Knuckle with injection moulded plastic sockets with outer collars - minimal friction against the bracket eyes
- Selflubricating effect for the bolts

Material:	Stainless steel, polished
Weight:	approx. 0.700 kg/each
Article No.	631 560

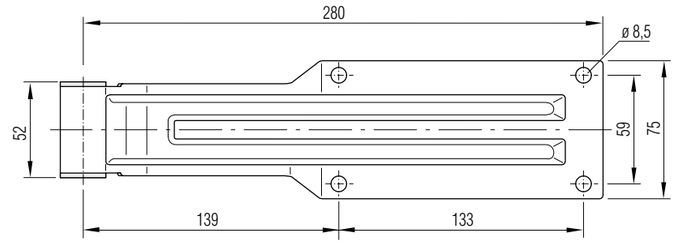

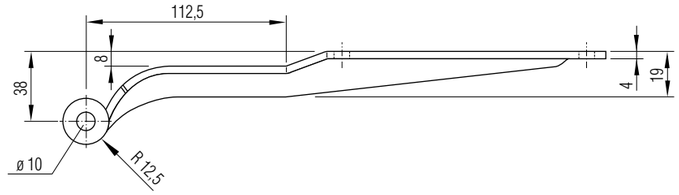

Hinge bracket 37.5 mm

- Weld-on hinge bracket
- Extra slim

Material:	Stainless steel, satin
Weight:	approx. 0.150 kg/each
Article No.	631 626

Assembly example

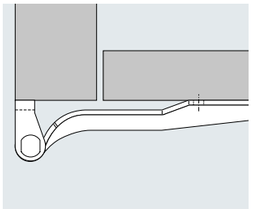

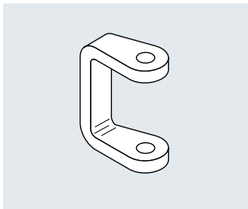

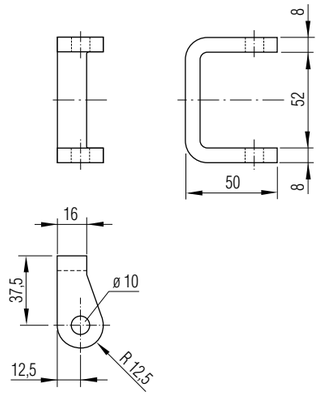

All technical specifications contained in this brochure are approximate and no guarantee is given as to their accuracy. Designs are subject to change.

www.METALIKA-KACIN.com

Continuous hinges 270° Accessories for hinge type 280

Hinge bracket 38 mm

- Screw-on hinge bracket. Angle shape of the fixing surfaces
- Eyes welded onto the fixing bracket

Material:	Stainless steel, polished
Weight:	approx. 0.290 kg/each
Article No.	631 660

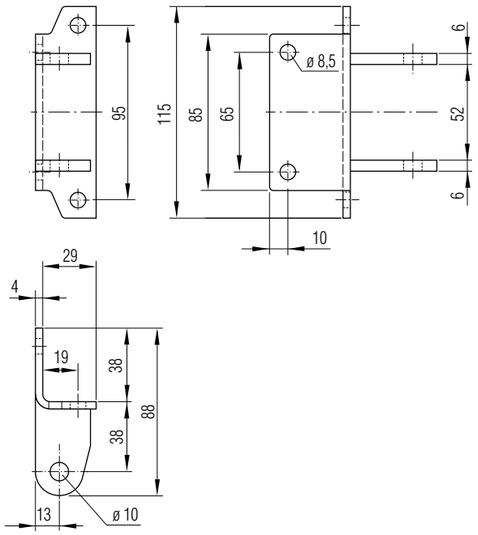

Assembly example

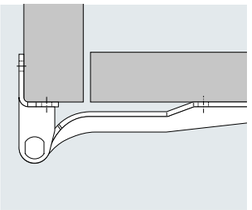

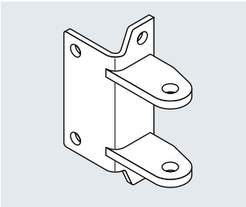

Hinge bolt

- Bolt located securely in the bracket eye
- The blade knuckle rotates around the bolt
- Head with parallel surfaces for wrenches
- With nut and lock nut, M 10 thread

Material:	Stainless steel
Weight:	approx. 0.070 kg/each
Article No.	631 722

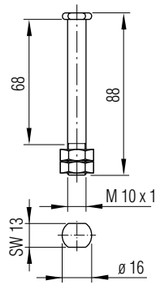

www.METALIKA-KACIN.com

All technical specifications contained in this brochure are approximate and no guarantee is given as to their accuracy. Designs are subject to change.

Continuous hinges 270° Type 365

Hinge blade 365/270°

- Superior strength category
- Strong reinforcing ribs, raised up to the hinge knuckle
- Knuckle with injection moulded plastic sockets with outer collars - minimal friction against the bracket eyes
- Selflubricating effect for the bolts

Material:	Stainless steel, polished
Weight:	approx. 1.170 kg/each
Article No.	631 530

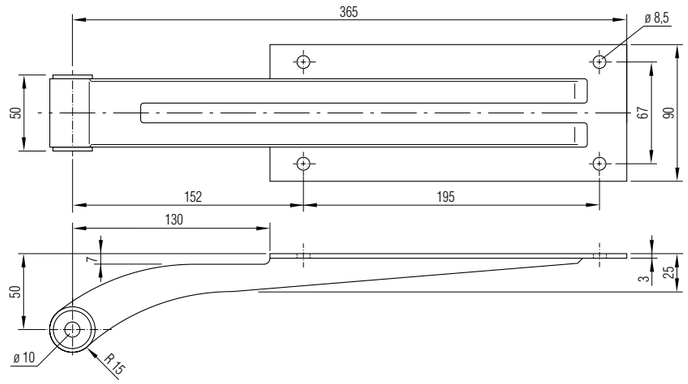

Strength data for hinge blade 631 530 in combination with the hinge brackets 631 630, 631 636 applicable for the material stainless steel

Bending load (vertical)

Hinge blade 631 530 with hinge bracket Article No.	F = max. load when functioning properly [kg]	max. deformation flexibility range [mm]	residual deformation [mm]
631 636	110	3.5	0.2
631 630	90	3.2	0.25

Pressure load (internal) hinge blade 631 530

with hinge bracket Article No.	F = max. load when functioning properly [kg]	max. deformation flexibility range [mm]	residual deformation [mm]
631 630	302	1.9	0.2
631 636	302	1.9	0.2

Alternating cyclic load (horizontal, stress / tensile)
F = max. load when working perfectly 610 kg

Article No.	D = max. deformation flexibility range [mm]	residual deformation [mm]	E = max. deformation flexibility range [mm]	residual deformation [mm]
631 530	0.58	0.11	-	-
631 630	-	-	0.48	0.04
631 636	-	-	0.32	0.08

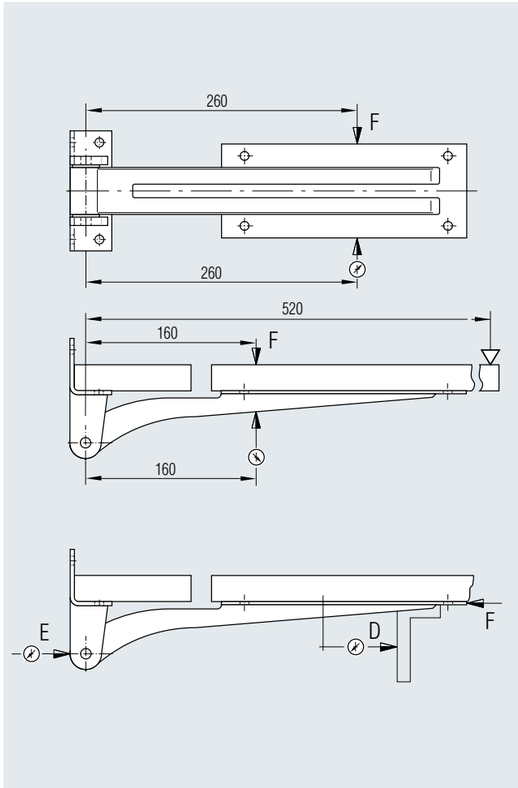

www.METALIKA-KACIN.com

All technical specifications contained in this brochure are approximate and no guarantee is given as to their accuracy. Designs are subject to change.

Continuous hinges 270° Accessories for hinge type 365

Hinge bracket 50 mm

- Screw-on hinge bracket.
- Extra slim design
- The angle of the base plate allows for the use of wide external seals on the frame side
- Eyes welded onto the baseplate

Material:	Stainless steel, polished
Weight:	approx. 0.420 kg/each
Article No.	631 630

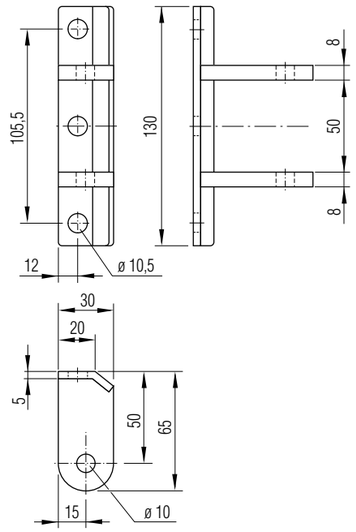

Assembly example

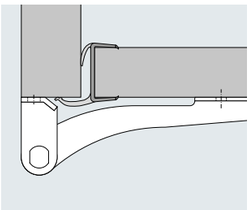

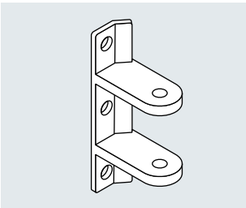

Hinge bracket 50 mm

- Screw-on hinge bracket
- Angle shape of the fixing surfaces eyes welded onto the fixing bracket

Material:	Stainless steel, polished
Weight:	approx. 0.530 kg/each
Article No.	631 636

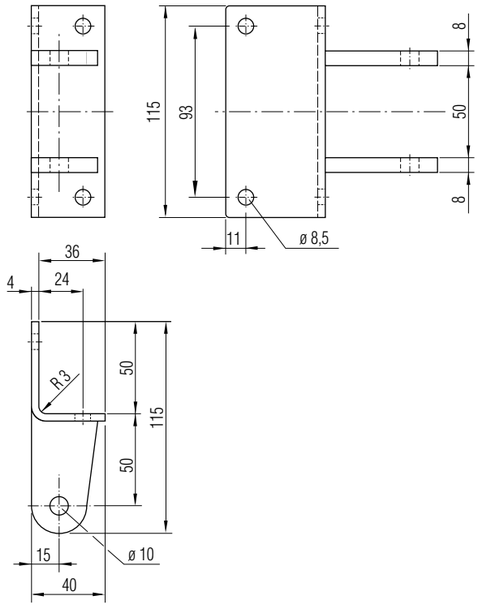

Assembly example

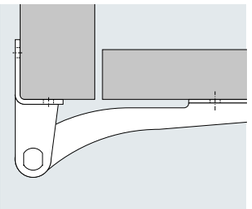

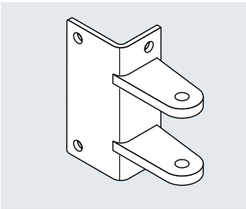

www.METALIKA-KACIN.com

All technical specifications contained in this brochure are approximate and no guarantee is given as to their accuracy. Designs are subject to change

Accessories for hinge type 365

Hinge bolt

- Bolt located securely in the bracket eye
- The blade knuckle rotates around the bolt
- Head with parallel surfaces for wrenches
- With nut and lock nut, M 10 thread

Material:	Stainless steel
Weight:	approx. 0.070 kg/each
Article No.	631 722

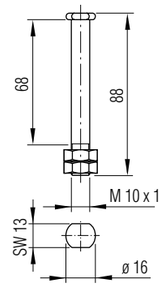

www.METALIKA-KACIN.com

All technical specifications contained in this brochure are approximate and no guarantee is given as to their accuracy. Designs are subject to change

Continuous hinges 270° / Type 257

Hinge blade 257/270°

- Extra slim blade design
- Knuckle with injection moulded plastic sockets with outer collars - minimal friction against the bracket eyes
- Self-lubricating effect for the bolts
- Packed in polybag

Material:	631 535 – Aluminium, mill finish
Weight:	approx. 0.455 kg/each
Article No.	**631 535**

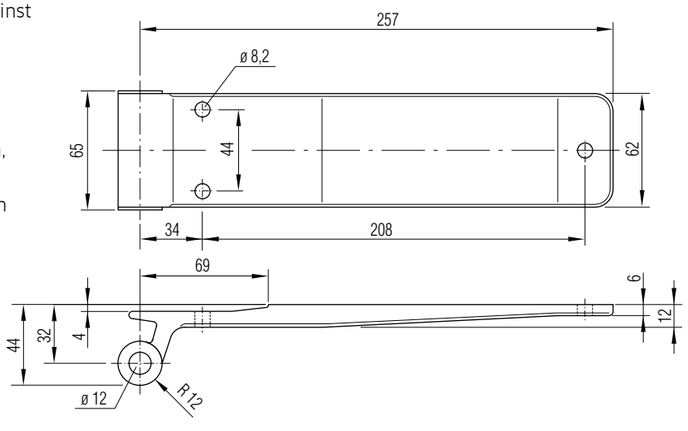

Note
An aluminium with joggle washer (Article No. 631 539) is always supplied with the above-mentioned hinges.

Replacement part:	Plastic bushing 631 595

Hinge blade 257/270°

- Extra slim blade design
- Knuckle with injection moulded plastic sockets with outer collars - minimal friction against the bracket eyes
- Self-lubricating effect for the bolts

Material:	631 532 – Aluminium, mill finish 631 533 – Aluminium, anodised[1]
Weight:	approx. 0.455 kg/each
Article No.	**631 532** **631 533**

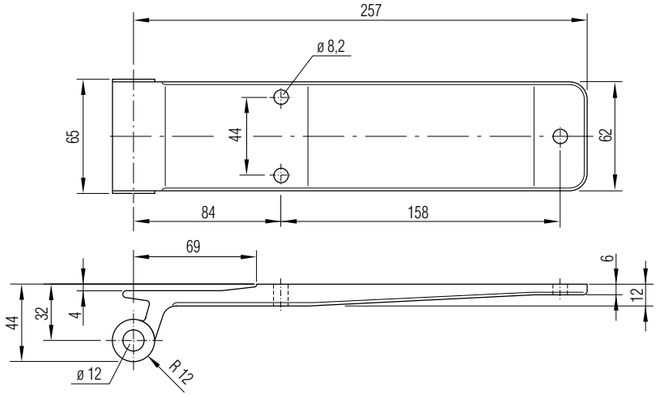

Replacement part:	Plastic bushing 631 595

[1] Packed in polybag.

Note:
The aluminium hinges can be secured faster and cheaply using our TIFAS blind rivets (429 112 - 429 116) Further information available on request.

www.METALIKA-KACIN.com

All technical specifications contained in this brochure are approximate and no guarantee is given as to their accuracy. Designs are subject to change.

Continuous hinges 270° Type 307

Hinge blade 257/270°

- Extra slim blade design
- Knuckle with injection moulded plastic sockets with outer collars - minimal friction against the bracket eyes
- Self-lubricating effect for the bolts
- Packed in polybag

Material:	631 586 - Aluminium, mill finish 631 589 - Aluminium, anodised[1]
Weight:	approx. 0.675 kg/each
Article No.	**631 586** **631 589**

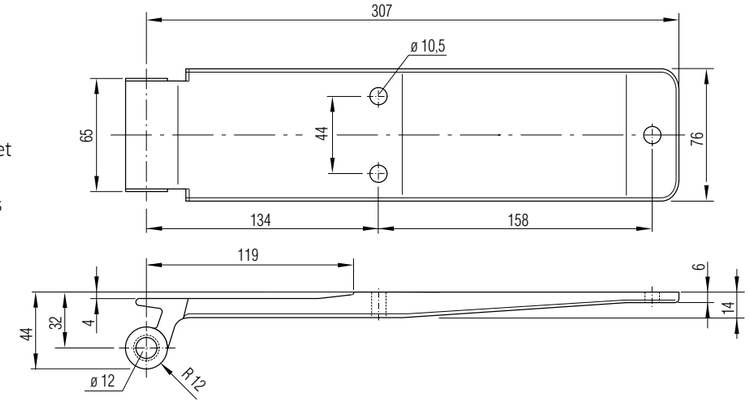

Replacement part:	Plastic bushing 631 595

[1] Packed in polybag.

Note:
The aluminium hinges can be secured faster and cheaply using our lockbolt systems. Further information available on request.

www.METALIKA-KACIN.com

All technical specifications contained in this brochure are approximate and no guarantee is given as to their accuracy. Designs are subject to change.

Accessories for hinge type 257/307

Hinge bracket 32 mm

Weld-on hinge bracket, customs/tamper-proof

Material:	631 641 - Steel, electro galvanised
	631 642 - Stainless steel, mill finish
Weight:	631 641 - approx. 0.185 kg/each
	631 642 - approx. 0.195 kg/each
Article No.	**631 641**
	631 642

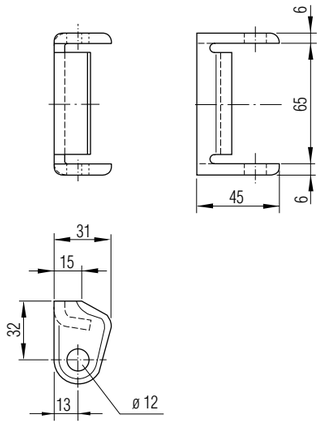

Assembly example

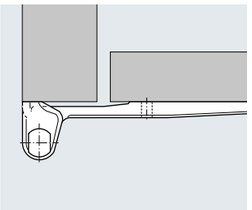

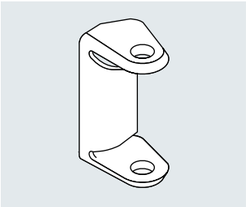

This hinge combination offers a tamper-proof design. When the door is closed the leg „A“ is positioned behind centre bridge „B“ of the hinge support. Even when using non-welded bolts it is impossible to undo the blade which means the door cannot be removed from the hinge support. The vertical space between the two door must not exceed 6 mm.

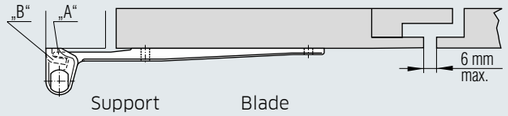

www.METALIKA-KACIN.com

All technical specifications contained in this brochure are approximate and no guarantee is given as to their accuracy. Designs are subject to change.

Accessories for hinge type 257/307

Hinge bracket 32 mm

Weld-on hinge bracket, customs/tamper-proof

Material:	631 643 - Steel, electro galvanised
	631 644 - Stainless steel, mill finish
Weight:	631 643 - approx. 0.175 kg/each
	631 644 - approx. 0.171 kg/each
Article No.	**631 643**
	631 644

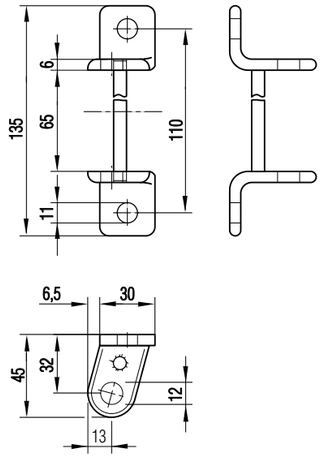

Assembly example

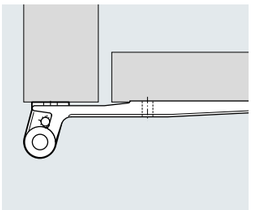

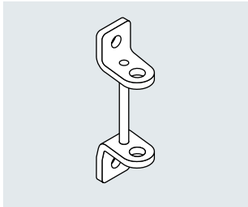

This hinge combination offers a tamper-proof design. When the door is closed the leg „A“ is positioned behind centre bridge „B“ of the hinge support. Even when using non-welded bolts it is impossible to undo the blade which means the door cannot be removed from the hinge support. The vertical space between the two door must not exceed 6 mm.

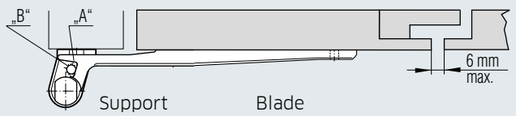

www.METALIKA-KACIN.com

All technical specifications contained in this brochure are approximate and no guarantee is given as to their accuracy. Designs are subject to change.

Accessories for hinge type 257/307

Hinge bracket 47 mm

Weld-on hinge bracket, customs/tamper-proof

Material:	631 651 - Steel, electro galvanised
	631 652 - Stainless steel, mill finish
Weight:	631 651 - approx. 0.205 kg/each
	631 652 - approx. 0.215 kg/each
Article No.	**631 651**
	631 652

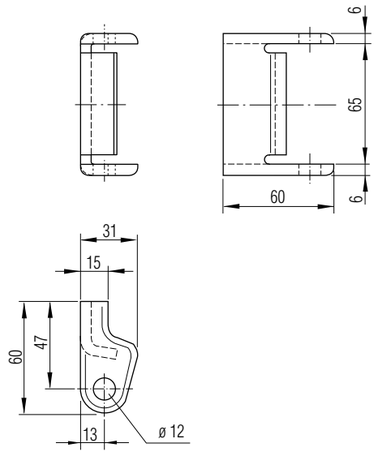

Assembly example

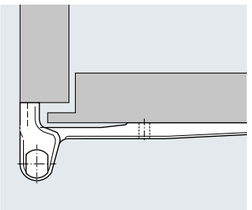

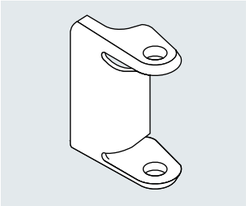

This hinge combination offers a tamper-proof design. When the door is closed the leg „A“ is positioned behind centre bridge „B“ of the hinge support. Even when using non-welded bolts it is impossible to undo the blade which means the door cannot be removed from the hinge support. The vertical space between the two door must not exceed 6 mm.

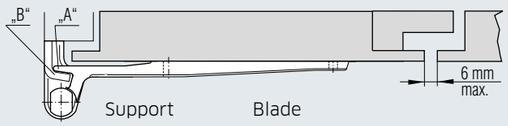

Hinge pin cannot be lubricated

With safety nut SW 17 mm

Material:	631 715 - Steel, electro galvanised
	631 716 - Stainless steel, mill finish
Weight:	631 715 - approx. 0.100 kg/each
	631 716 - approx. 0.100 kg/each
Article No.	**631 715**
	631 716

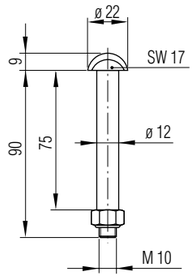

Individual components:
Hinge pin – Steel, electro galvanised Article No. 631 713
Hinge pin – Stainless steel, mill finish Article No. 631 714
Safety nut – Steel, electro galvanised Article No. 661 824
Safety nut – Stainless steel, mill finish Article No. 661 167

www.METALIKA-KACIN.com
All technical specifications contained in this brochure are approximate and no guarantee is given as to their accuracy. Designs are subject to change.

Hooking door retainers

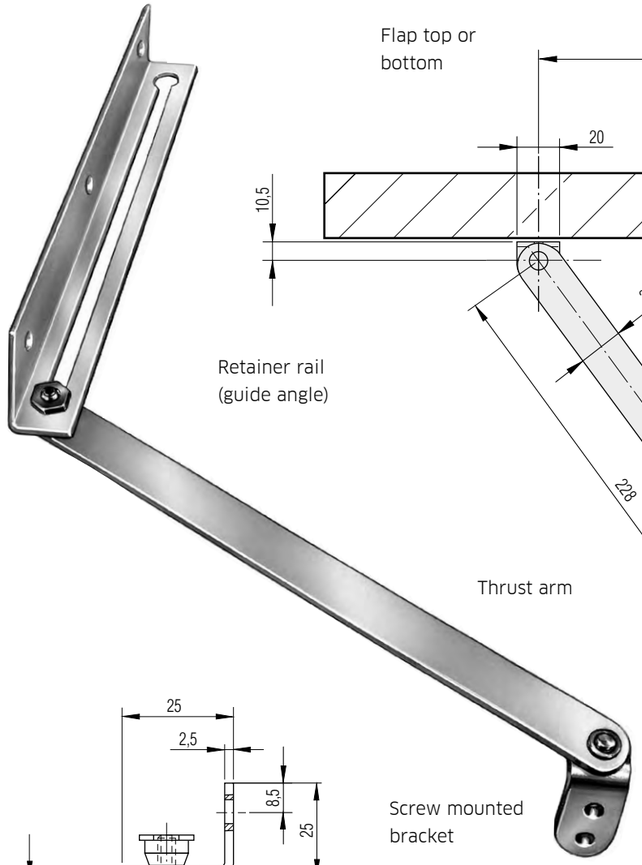

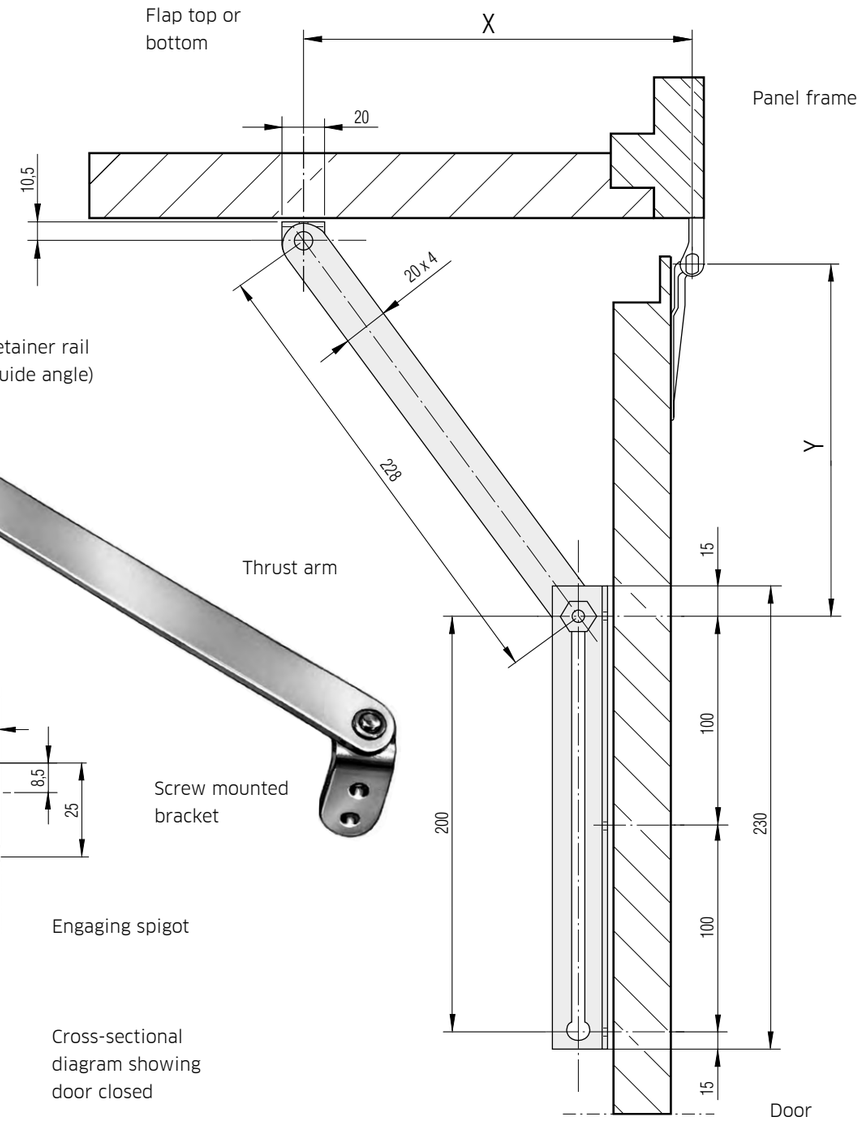

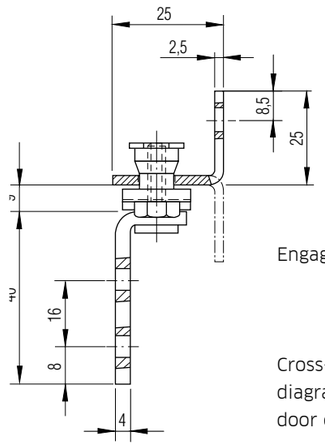

Door retainer rail

- Automatic 90° door retainer by locking the spigot, illustrated, on the end of the thrust arm
- Can be used equally for right and left, for top-mounted and inside doors
- Weld or screw-on mounting
- Fixing holes dia. 6.4 mm. For 90° opening angle: measurement X=140 mm, measurement Y=180 mm, minimum door width 403 mm.

Material:	Steel, electro galvanised
Weight:	approx. 0.360 kg/each
Article No.	**631 750**

www.METALIKA-KACIN.com
All technical specifications contained in this brochure are approximate and no guarantee is given as to their accuracy. Designs are subject to change.

Hooking door retainers

Hooking door retrainer with spring bridge an T piece 90

Complete set

Material: High grade stainless steel
Weight: 631 940 – ca. 0.110 kg/each
631 944 – ca. 0.096 kg/each
Article No. 631 940 – with plastic baseplate
Retainer T-bar component
Article No. 631 920
631 944 – with plastic baseplate
for retainer catch
Article No. 631 922

Loose for spare requirements / Single order

Pos.	Component	Quantity	Material	Weight approx. [kg/each]	Article No.
1	Retainer T-bar component with T piece 90	1	Stainless steel	0.056	631 874
2	Plastic baseplate for Retainer T-bar component	1	Plastic, black	0.008	631 878
3	Bracket (Assembly / Retainer)	1	Stainless steel	0.024	631 884
4.1	Plastic baseplate for Catch Plate	1	Plastic, black	0.022	631 920
4.2	Plastic baseplate for Retainer Catch	1	Plastic, black	0.008	631 922

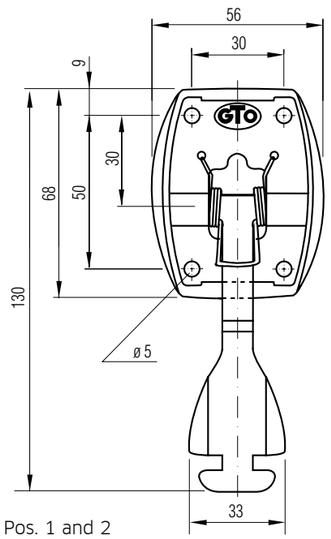

Pos. 1 and 2

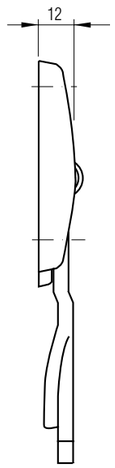

631 874/878

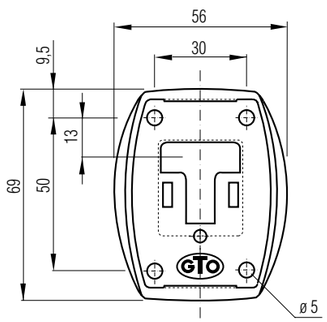

Pos. 3 and 4.1

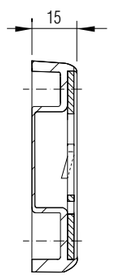

631 884/920

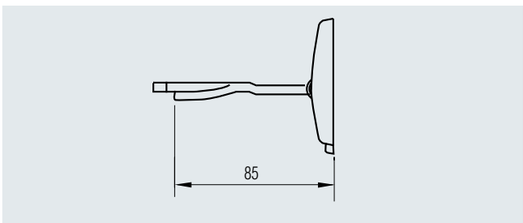

T-bar component, angled

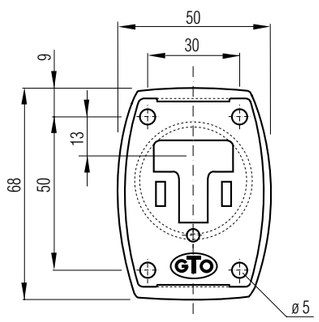

Pos. 3 and 4.2

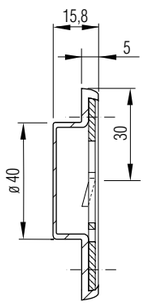

631 884/922

www.METALIKA-KACIN.com
All technical specifications contained in this brochure are approximate and no guarantee is given as to their accuracy. Designs are subject to change.

Hooking door retainers

Hooking door retrainer with spring bridge an T piece

185 Complete set

Material: High grade stainless steel
weight: ca. 0.136 kg/each
Article No. 631 942

Loose for spare requirements / Single order

Pos.	Component	Quantity	Material	Weight approx. [kg/each]	Article No.
1	Retainer T-bar component with T piece 185	1	Stainless steel	0.078	631 876
2	Plastic baseplate for Retainer T-bar component	1	Plastic	0.008	631 878
3	Catch Plate / Retainer plate	1	Stainless steel	0.024	631 884
4	Plastic baseplate for Catch Plate	1	Plastic	0.022	631 920
5	Fixing clip	1	Stainless steel	0.004	631 879

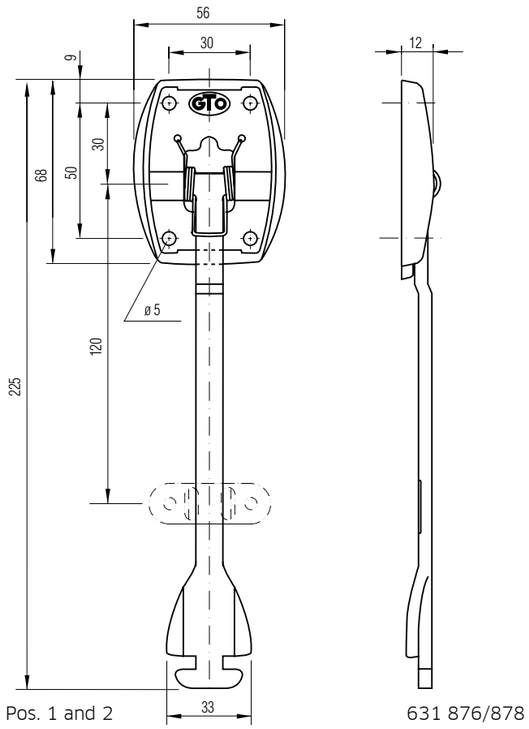

Pos. 1 and 2

631 876/878

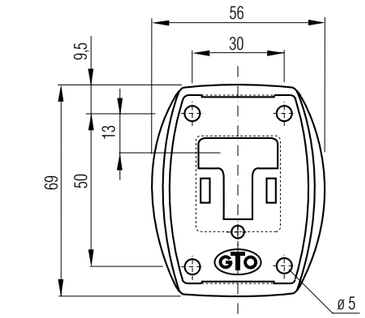

Pos. 3 and 4

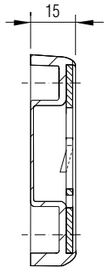

631 884/920

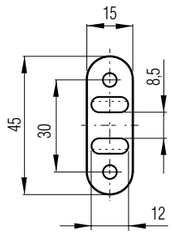

Pos. 5

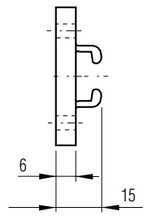

631 879

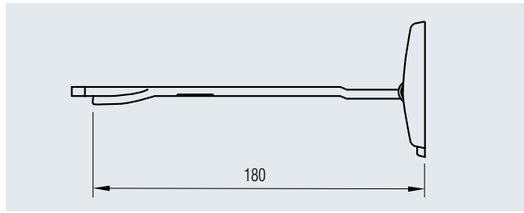

T-bar component, angled

www.METALIKA-KACIN.com
All technical specifications contained in this brochure are approximate and no guarantee is given as to their accuracy. Designs are subject to change.

Hooking door retainers

Hooking door retrainer with spring bridge an T piece

Complete set

Material: Steel, galvanised
Article No. 631 790

Material: Stainless steel
Article No. 631 791

Loose for spare requirements / Single order

Pos.	Component	Quantity	Material	Weight approx. [kg/each]	Article No.
1	Retainer T-bar component with T piece	1	galvanised, high grade stainless steel	0.058	631 792[1]
		1	Stainless steel	0.058	631 795
2	Catch Plate	1	galvanised, high grade stainless steel	0.030	631 788
		1	Stainless steel	0.032	631 789
3	Plastic protective mounting	2	Plastic, black	0.012	631 798

[1] Spring bridge in high grade stainless steel

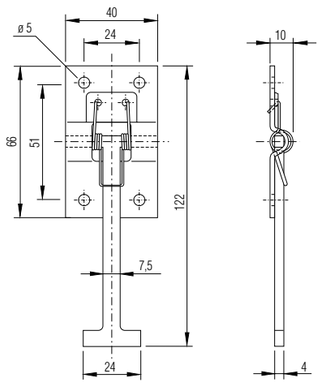

Pos. 1 631 792/631 795

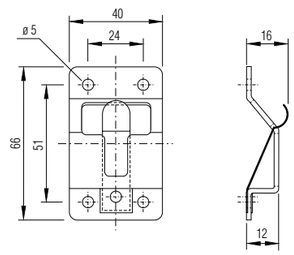

Pos. 2 631 788/631 789

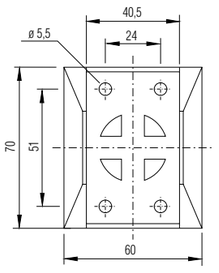

Pos. 3 631 798

All technical specifications contained in this brochure are approximate and no guarantee is given as to their accuracy. Designs are subject to change.

www.METALIKA-KACIN.com

Magnetic and plastic door retainers

Door stay, magnetic

- Magnetic part with elastic, impact-absorbent jacket
- Baseplate with 3 attachment screws
- With baseplate ring clamp
- Counter-pole with central attachment hole, recessed

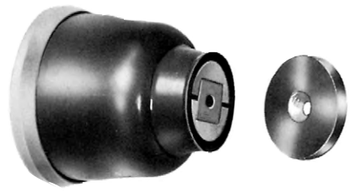

Material: Magnetic part: Neoprene jacket, grey
Plastic baseplate, black
Plastic ring clamp, grey
Counter-pole made of Perla steel, galvanised

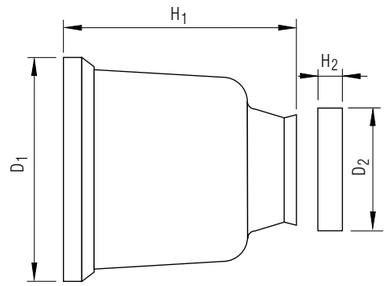

Adhesive strength approx. [daN]	D_1 [mm]	D_2 [mm]	H_1 [mm]	H_2 [mm]	Weight approx. [kg/each]	Article No.
10	42	20	34	4	0.006	631 820
20	54	28	44	6	0.130	631 830
30	72	40	70	6	0.250	631 840

Individual components not available separately!

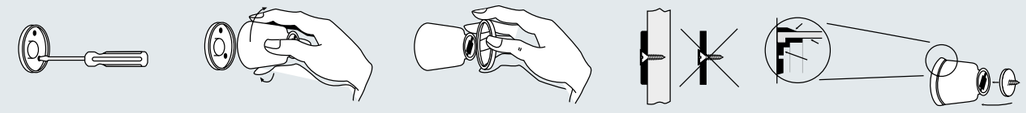

Unscrew baseplate. | Press jacket with turning action over baseplate. | Slide on ring clamp. | Fit counter piece with counter sunk fixing element only.

Retainer and clamp

- Consisting of clamping piece (631 867) and spherical spigot (631 866)
- Base of clamping piece with vulcanized metal plate
- Central fixing hole, counter sunk to depth of 30 mm, ø 8.8 mm
- Spherical spigot with central fixing hole, ø 6.5 mm, counter sunk ø 11 mm, 10 mm deep

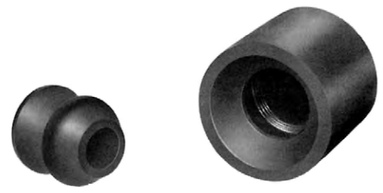

Material: Clamping piece rubber, black
Spherical spigot plastic, black
Weight: approx. 0.060 kg/each
Article No. 631 865 – (complete)

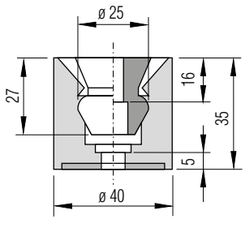

Should you wish to order individual parts of these mountings please state the corresponding Article No. shown in ().

All technical specifications contained in this brochure are approximate and no guarantee is given as to their accuracy. Designs are subject to change.

www.METALIKA-KACIN.com

Magnetic and plastic door retainers

Retainer and clamp

- Consisting of jaw piece (631 802) and spherical spigot (631 803)
- Jaw piece with adjusting, symmetrically acting jaws
- Clamping pressure produced by 2 compression springs
- 4 fixing holes dia. 4.5 mm, distance horizontal 55 mm, horizontal 17 mm
- Spherical spigot fully rotating, circular, central fixing hole dia. 5 mm

Material:	Plastic, white Compression springs - stainless steel
Weight:	approx. 0.050 kg/each
Article No.	631 805 – (complete)

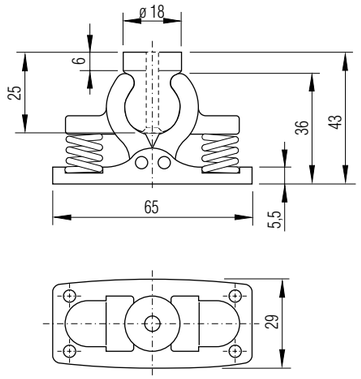

Retainer and clamp

- Consisting of jaw piece (631 802) and spherical spigot (631 801)
- Jaw piece as described above
- Spigot section with baseplate and 4 longitudinal fixing holes
- 10 x 5 mm, distance horizontal 50 mm, horizontal 17 mm

Material:	Plastic, white. Compression springs - stainless steel
Weight:	approx. 0.060 kg/each
Article No.	631 800 – (complete)

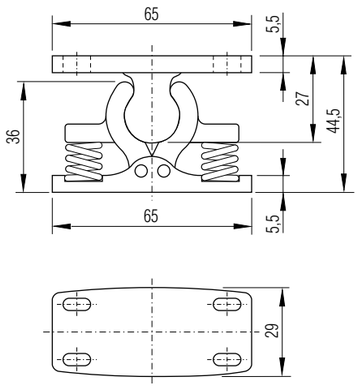

Retainer and clamp

- Consisting of jaw piece (631 862) and spherical spigot (631 861)
- Jaw piece without springs
- Baseplate with 2 longitudinal fixing holes 7.5 x 5.5 mm, distance 53 mm
- Spigot section with baseplate. The screw forms a ball-shaped rubber sleeve in the spigot
- This distorts the shape of the spigot, the clamping force is adjustable
- 2 longitudinal fixing holes, arranged transversally to the baseplate, 7.5 x 5.5 mm, distance 42 mm

Material:	Plastic, white Screw steel, galvanised Rubber sleeve, black
Weight:	approx. 0.045 kg/each
Article No.	631 860 – (complete)

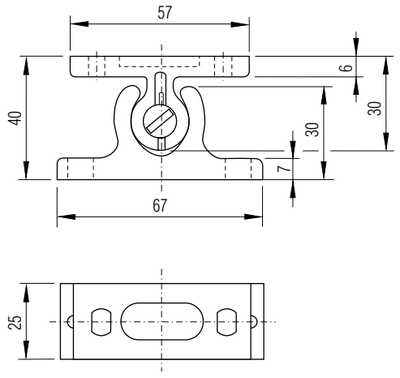

Should you wish to order individual parts of these mountings please state the corresponding Article No. shown in ().

www.METALIKA-KACIN.com
All technical specifications contained in this brochure are approximate and no guarantee is given as to their accuracy. Designs are subject to change.

Door retainer strip

Door retainer strip

- Consisting of an elastic strip, with fixing hole, finger hole and 7 cutouts for hanging the retainerstrip on the knob bolts at specific distances (631 896), 2 fixing plates (628 995) and 2 knob bolts for fixing the retainerstrip (631 897)
- The retainerstrip is pivot mounted in the fixing plates
- Fixing plates with 1 central hole ø 8.5 mm
- Knob bolts with 1 central fixing hole ø 6.5 mm

Material:	Retainerstrip Polyurethaner integral foam rubber, black Fixing plates steel, galvanised Knob bolts aluminium, raw
Weight:	approx. 0.310 kg/each
Article No.	631 895 – (complete)

We can also supply the individual components; please state the Article No. shown in ().

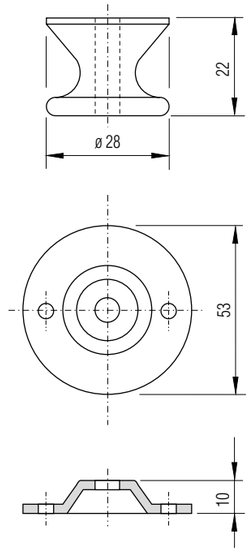

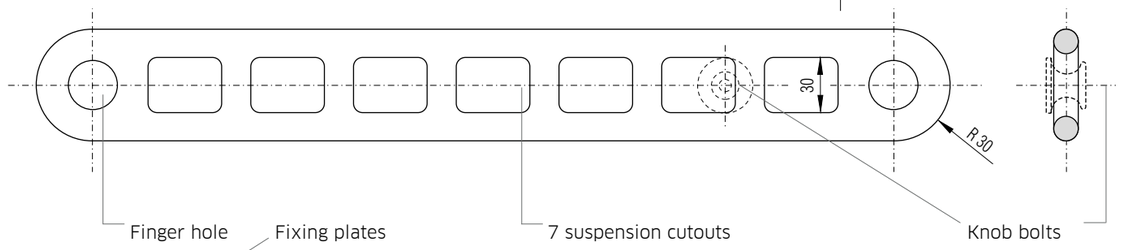

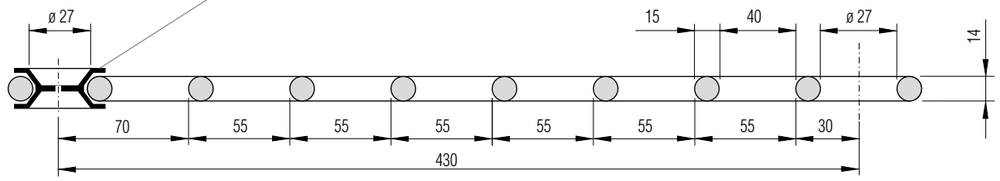

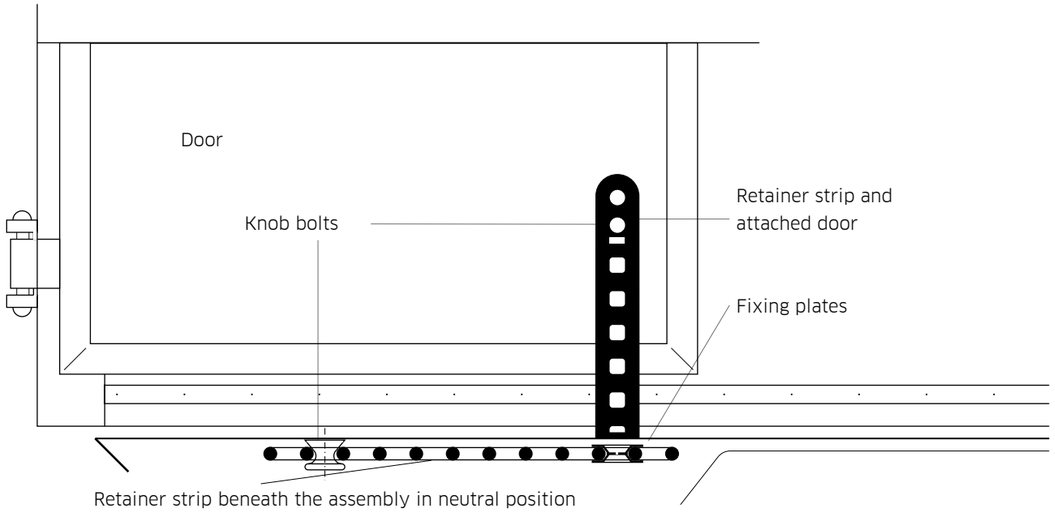

www.METALIKA-KACIN.com
All technical specifications contained in this brochure are approximate and no guarantee is given as to their accuracy. Designs are subject to change.

Door strip

Typical fixing example:

Retainer strip 631 895 for attaching a folding leaf system to a GETO Van body kit - rear door assembly.

www.METALIKA-KACIN.com

All technical specifications contained in this brochure are approximate and no guarantee is given as to their accuracy. Designs are subject to change.

Telescopic door retainers

GTO spring loaded door retainer

- The spring loaded retainer must be polyurethanelled against a high grade steel compression spring. The compression spring is located inside a sealed aluminium profile housing which is tightened by plastic end covers and protected against dirt and humidity by O rings.
- The plastic cover on the front side is fitted with counter sunk stops which hold the arm in three 90° positions in the released position and prevent it moving into a position other than that required.
- The aluminium strip comes with two longitudinal channels for holding the two, infinitely adjustable fixing brackets which are screw or weld-mounted to the vehicle.
- The internal parts are galvanized, smooth-running and maintenance-free.
- The spring loaded arm has a stroke of approx. 230 mm.

Material:	Profile - aluminium, mill finish / anodised End covers - plastic End cover screws - stainless steel Spring - stainless steel Arm - steel, galvanised or stainless steel Cover on arm - rubber, black Fixing brackets - steel, galvanised / stainless steel (Fixing fittings - steel, galvanised / stainless steel)
Weight:	1.890 kg/each
Article No.	**631 901** – Steel, galvanised **631 903** – Stainless steel
Accessories:	Article No. 631 904 fixing bracket set Steel, galvanised, including fixing fittings Article No. 631 906 fixing bracket set Stainless steel, including fixing fittings
Weight:	0.175 kg/per set

Using the additional fixing brackets, which are screwed or welded beneath the loading surfaces provides the option for securing the spring loaded arm door retainerto these surfaces.

www.METALIKA-KACIN.com

All technical specifications contained in this brochure are approximate and no guarantee is given as to their accuracy. Designs are subject to change.

Telescopic door retainers

Accessories

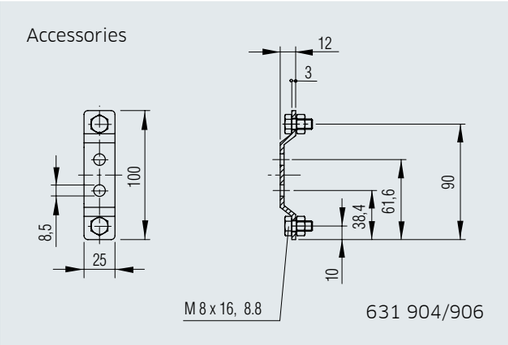

Accessories

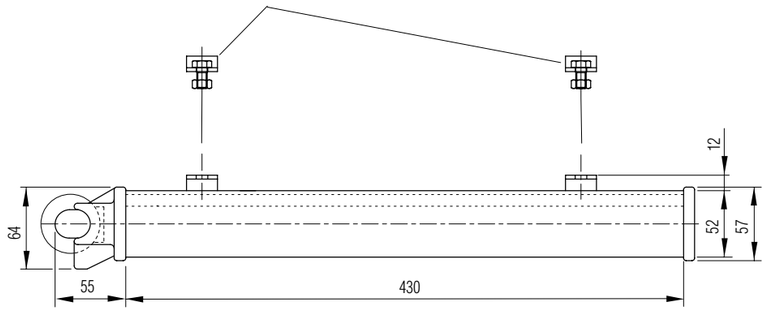

631 901/903

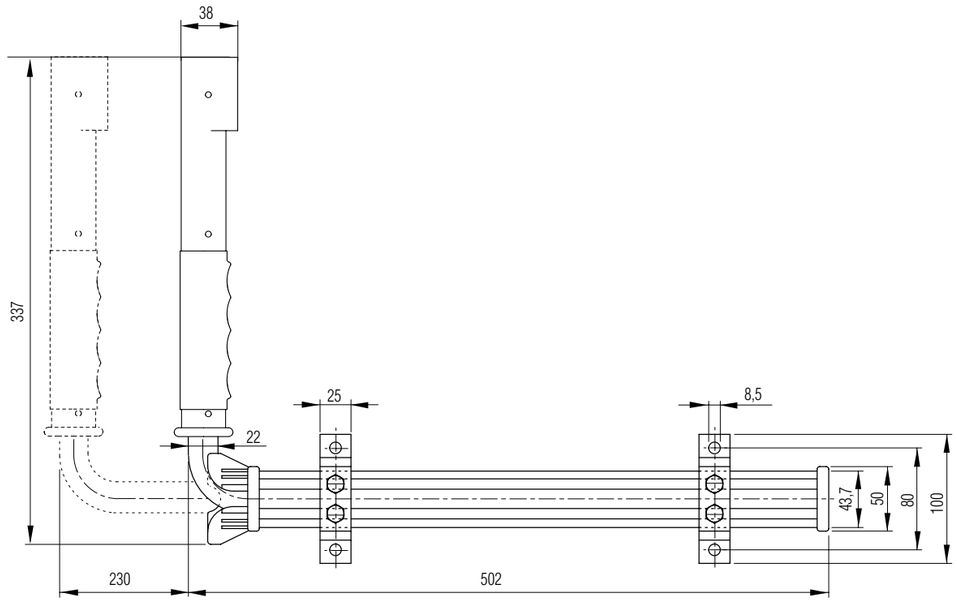

Telescopic door retainers

„Walking stick“ door retainer

- Telescopic retainer arm, pivoting, tube-mounted
  Completely electro galvanised - including internal parts!
- Retainer arm telescopic length 280 mm (stroke)
- Replaceable rubber stop on the retainer arm

Material:	Steel, electro galvanised - including internal parts Rubber stop, black
Weight:	2.33 kg/each
Article No.	631 907 001

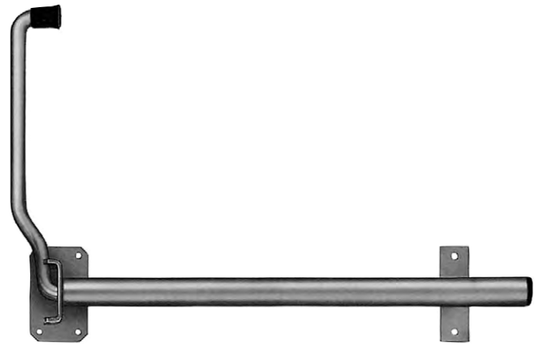

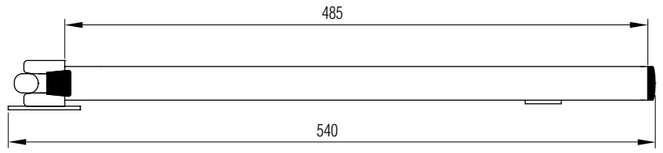

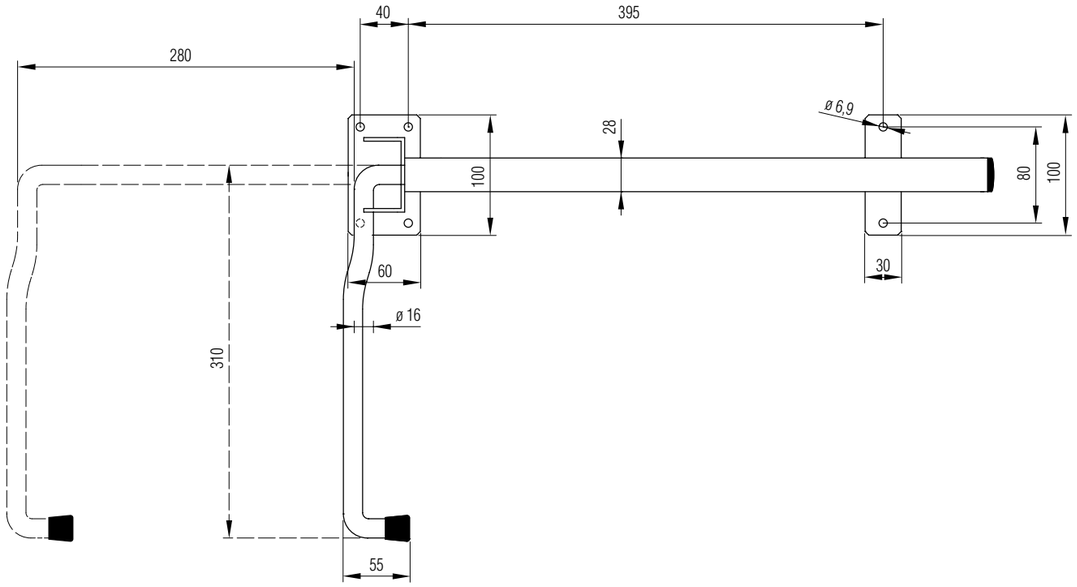

www.METALIKA-KACIN.com
All technical specifications contained in this brochure are approximate and no guarantee is given as to their accuracy. Designs are subject to change.

www.METALIKA-KACIN.com
All technical specifications contained in this brochure are approximate and no guarantee is given as to their accuracy. Designs are subject to change.