Zapirala za drsna (pomična) vrata
Sliding door latches

METALIKA KACIN

Slovenija
(+386) 04 510 53 60
info@metalika-kacin.com
Hrvatska
(+385) 051 213 060
hrvatska@metalika-kacin.com
Srbija
(+381) 011 25 21 756
srbija@metalika-kacin.com

Machine Handle for Sliding Doors

[6-1680]

R L

RoHS WEEE

Advantages

- This machine handle has been especially designed for sliding doors.
- By pulling on the handle, the hooked cam is disengaged and the lock released.
- Hooked cam with free stroke.
- Mechanical separation of the handle and the hooked cam.
- As handles any Ø30mm tubes in variable lengths can be used.
- The top and bottom latching devices can be used with or without hooked cam.

Materials

- **Tube housing:** zinc die, black
- **Pins:** brass
- **Spring:** stainless steel
- **Hooked cam:** steel, zinc plated
- **Handle-tube:** steel tube with synthetic coating, black

Remarks

1. Alternative cutout
2. open position
3. closed position
4. stroke 9mm

A = Distance between the center of the cutouts of the endpieces.

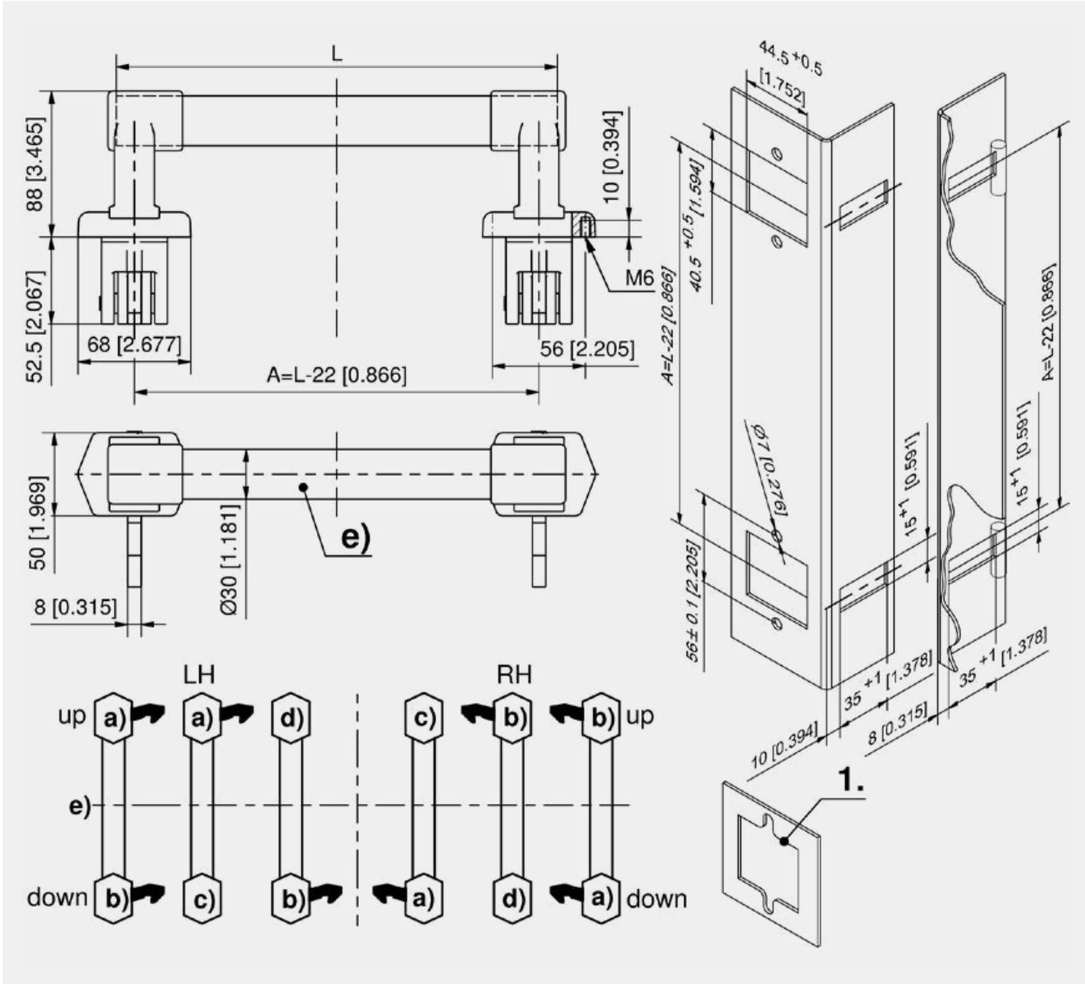

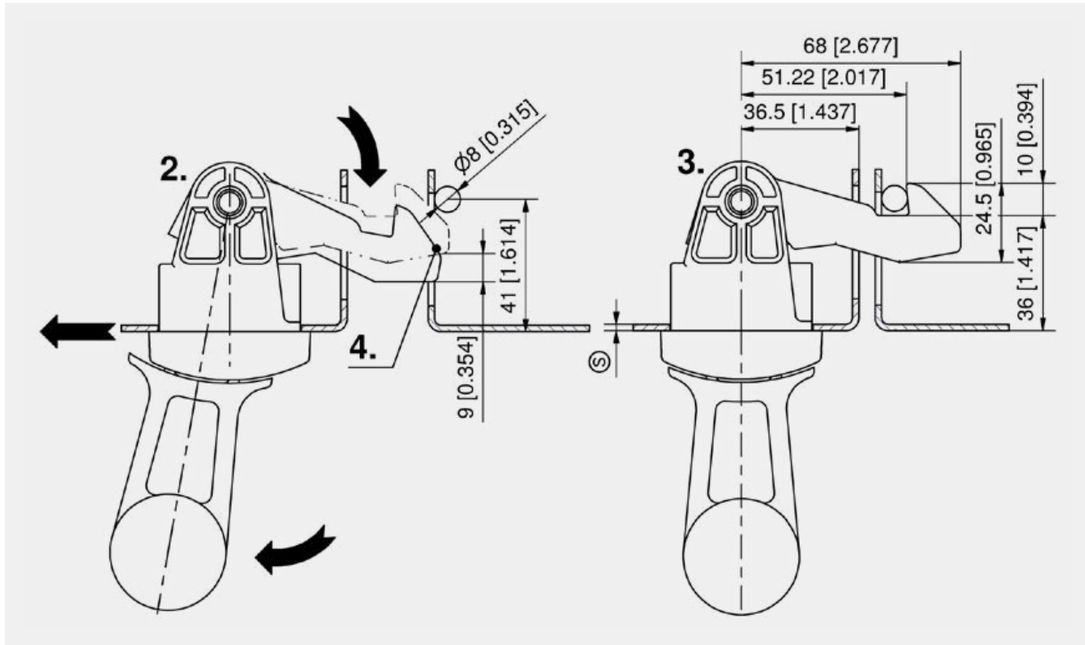

Latching device

	Part Number	Version
a)	280-9001.00-00000	with hooked cam
b)	280-9002.00-00000	without hooked cam
c)	280-9003.00-00000	with hooked cam
d)	280-9004.00-00000	without hooked cam

	Accessories
z)	213-0401.00-00000 **Steel tube, 266mm**
z)	213-0402.00-00000 **Steel tube, 366mm**
z)	213-0403.00-00000 **Steel tube, 466mm**
z)	213-0404.00-00000 **Steel tube, 566mm**
z)	213-0405.00-00000 **Steel tube, 666mm**
z)	213-0406.00-00000 **Steel tube, 766mm**

Sliding Door Latch

[1-415]

R L

IP 65

RoHS WEEE

Advantages

- Hooked cam with free stroke.
- Version RH, hook LH.
- Version LH, hook RH.
- Opening angle of the hook 15°.
- Please configure the Sliding Door Latch with escutcheon and insert or T- and L-handle or with swinghandle.

Materials

a)

- **Sliding door latch:** steel, zinc plated
- **Cam:** steel, zinc plated
- **Plug:** PE, black

b)

- **Lock support:** steel, zinc plated

Remarks

Please order separately: b) Lock support

1. Example for frame cutout.

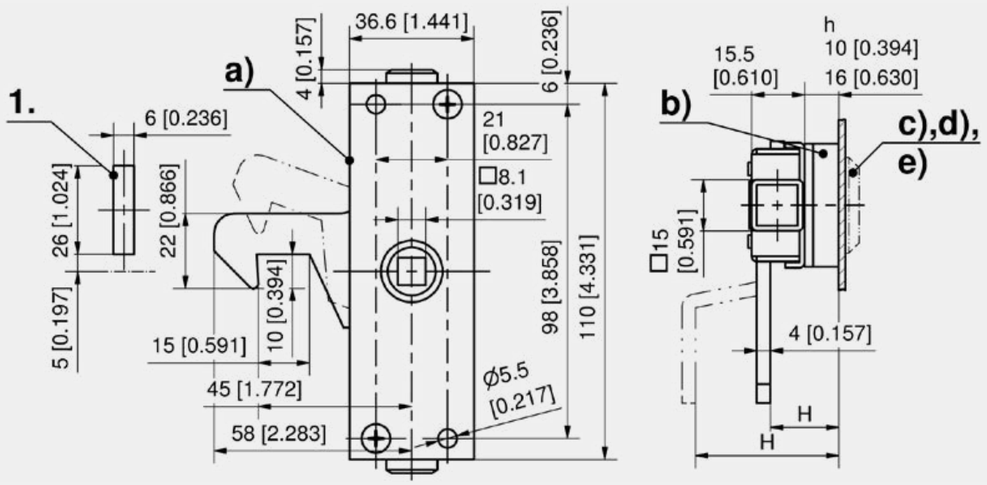

Sliding door version LH, slide direction RH

	Part Number	H-dimension without support	H-dimension with lock support A20	H-dimension with lock support A26	Installation type
a)	235-9015.00-00000	10 mm	20 mm	26 mm	screw-on
a)	235-9017.00-00000	32 mm	42 mm	48 mm	screw-on

Sliding door version RH, slide direction LH

	Part Number	H-dimension without support	H-dimension with lock support A20	H-dimension with lock support A26	Installation type
a)	235-9016.00-00000	10 mm	20 mm	26 mm	screw-on
a)	235-9018.00-00000	32 mm	42 mm	48 mm	screw-on

	Accessories
d) 208	1-430 **T- and L-Handles for Rod Latches**
e) 266	2-300 **Swinghandle RS 130 for Rod Latch**
c) 207	235-9101.00-00000 **Insert square 6mm**
c) 207	235-9102.00-00000 **Insert square 7mm**
c) 207	235-9103.00-00000 **Insert square 8mm**
c) 207	235-9104.00-00000 **Insert triangular 6.5mm CNOMO**
c) 207	235-9105.00-00000 **Insert triangular 7mm**

	Accessories
c) 207	235-9106.00-00000 **Insert triangular 8mm**
c) 207	235-9107.00-00000 **Insert double bit 3mm pin**
c) 207	235-9108.00-00000 **Insert double bit 5mm pin**
c) 207	235-9109.00-00000 **Insert Daimler Benz pin**
b)	235-1002.00-00000 **Lock support A26**
b)	235-1001.00-00000 **Lock support A20**

Escutcheon and Inserts

[1-430.01]

Advantages

- Escutcheon a, a1: for all inserts.
- Escutcheon b, b1: according to DIN 43668, double bit key for cell- or cabinet doors of electrical switchgears. The double bit key is removable only in closed position.
- Insert: double bit with 3mm (e) oder 5mm pin (e1).
- RH / LH application.
- IP65 according to DIN EN 60529 by sealing kit 209-9002.
- Please configure the escutcheon with insert and rod latch 1-400, 1-405, 1-410 and 1-415.

Materials

Escutcheon and inserts: zinc die, chrome plated

Sealing kit: NBR, black

Remarks

S = max. 4mm

R L

IP 65

15 Nm

RoHS WEEE

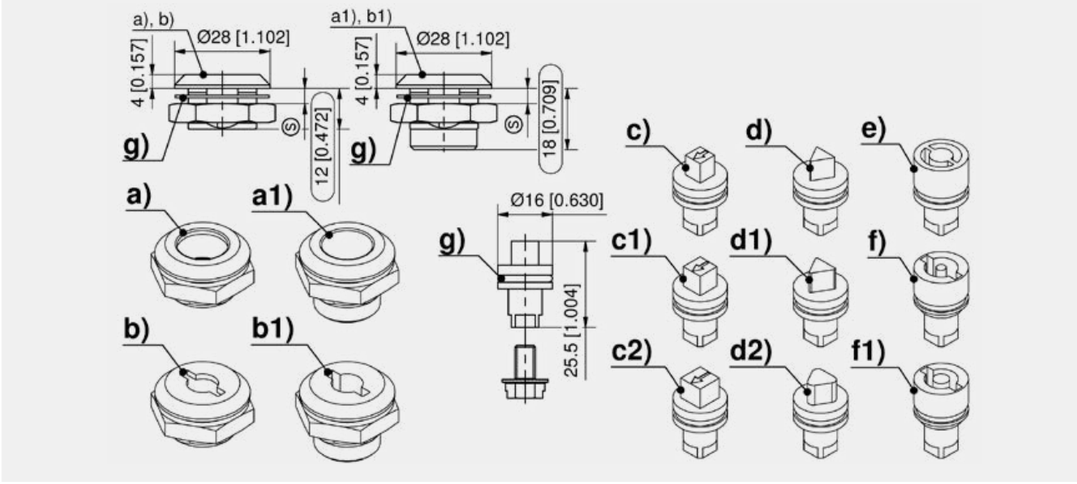

Escutcheon

	Part Number	Name	Material	Surface
a)	235-9203.00-00000	Escutcheon A 20, universal	zinc die	chrome plated
a1)	235-9204.00-00000	Escutcheon A 26, universal	zinc die	chrome plated
b)	235-9201.00-00000	Escutcheon A 20 only for double bit	zinc die	chrome plated
b1)	235-9202.00-00000	Escutcheon A 26, only for double bit	zinc die	chrome plated

Inserts with screw M6x10

	Part Number	Insert	Material	Surface
c)	235-9101.00-00000	Square 6mm	zinc die	chrome plated
c1)	235-9102.00-00000	Square 7mm	zinc die	chrome plated
c2)	235-9103.00-00000	Square 8mm	zinc die	chrome plated
d)	235-9104.00-00000	Triangular 6.5mm CNOMO	zinc die	chrome plated
d1)	235-9105.00-00000	Triangular 7mm	zinc die	chrome plated
d2)	235-9106.00-00000	Triangular 8mm	zinc die	chrome plated
e)	235-9109.00-00000	Daimler Benz type	zinc die	chrome plated
f)	235-9107.00-00000	Double bit 3mm pin	zinc die	chrome plated
f1)	235-9108.00-00000	Double bit 5mm pin	zinc die	chrome plated

	Function extension
g)	209-9002.00-00000 **Sealing kit IP65 for 200-Quarter-Turns**

T- and L-Handles for Rod Latches

[1-430]

20

R L

IP 65

15 Nm

RoHS WEEE

Advantages

- RH / LH application.
- IP65 according to DIN EN 60529 by sealing kit 209-9002.
- Please configure the handles with the rod latch 1-400, 1-405, 1-410 and 1-415.

Materials

- **Handle:** zinc die, chrome plated or black
- **Square pin:** steel, zinc plated
- **Bezel:** zinc die, chrome plated

Remarks

S= max. 4mm

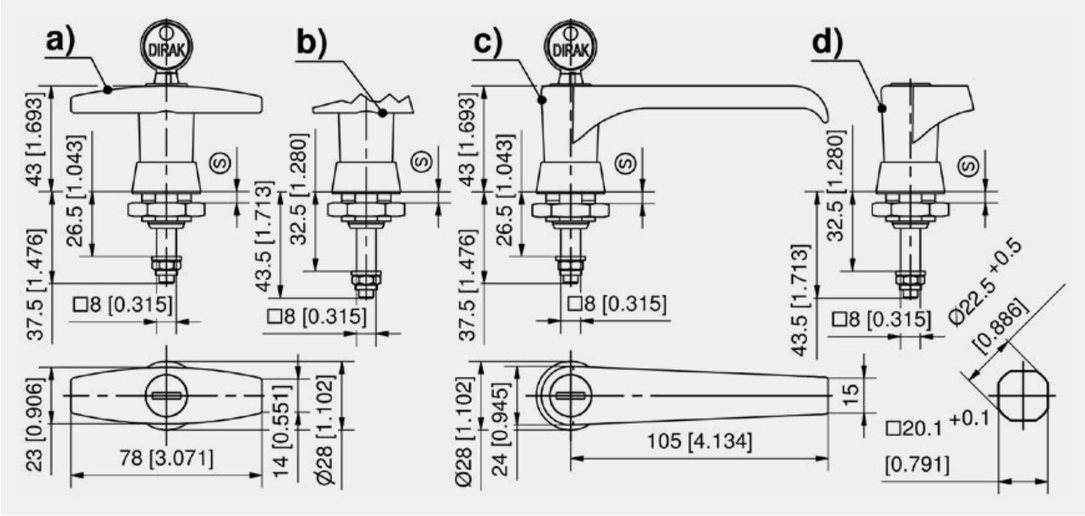

www.METALIKA-KACIN.com

T-handle, chrome plated

	Part Number	Version	Latching type
a)	235-9501.00-00000	A20/H22	
b)	235-9502.00-00000	A26/H28	
a)	235-9505.00-00000	A20/H22	keyed alike DIRAK 1333
b)	235-9506.00-00000	A26/H28	keyed alike DIRAK 1333
a)	535-9505.00-00000	A20/H22	keyed alike DS200
b)	535-9506.00-00000	A26/H28	keyed alike DS200
a)	235-9510.00-00000	A20/H22	keyed different
b)	235-9511.00-00000	A26/H28	keyed different
a)	501-9505.00-00000	A20/H22	PAGODA keyed alike 1991
b)	501-9506.00-00000	A26/H28	PAGODA keyed alike 1991
a)	501-9510.00-00000	A20/H22	PAGODA keyed different
b)	501-9511.00-00000	A26/H28	PAGODA keyed different

T-handle, black

	Part Number	Version	Latching type
a)	235-9503.00-00000	A20/H22	
b)	235-9504.00-00000	A26/H28	
a)	235-9507.00-00000	A20/H22	keyed alike DIRAK 1333
b)	235-9508.00-00000	A26/H28	keyed alike DIRAK 1333
a)	235-9512.00-00000	A20/H22	keyed different
b)	235-9513.00-00000	A26/H28	keyed different
a)	501-9507.00-00000	A20/H22	PAGODA keyed alike 1991
b)	501-9508.00-00000	A26/H28	PAGODA keyed alike 1991
a)	501-9512.00-00000	A20/H22	PAGODA keyed different
b)	501-9513.00-00000	A26/H28	PAGODA keyed different

L-handle, chrome plated

	Part Number	Version	Latching type
c)	235-9601.00-00000	A20/H22	
d)	235-9602.00-00000	A26/H28	
c)	235-9605.00-00000	A20/H22	keyed alike DIRAK 1333
d)	235-9606.00-00000	A26/H28	keyed alike DIRAK 1333
c)	535-9605.00-00000	A20/H22	keyed alike DS200
d)	535-9606.00-00000	A26/H28	keyed alike DS200
c)	235-9610.00-00000	A20/H22	keyed different
d)	235-9611.00-00000	A26/H28	keyed different
c)	501-9605.00-00000	A20/H22	PAGODA keyed alike 1991
d)	501-9606.00-00000	A26/H28	PAGODA keyed alike 1991

L-handle, black

	Part Number	Version	Latching type
c)	235-9603.00-00000	A20/H22	
d)	235-9604.00-00000	A26/H28	
c)	235-9607.00-00000	A20/H22	keyed alike DIRAK 1333
d)	235-9608.00-00000	A26/H28	keyed alike DIRAK 1333
c)	535-9607.00-00000	A20/H22	keyed alike DS200
d)	535-9608.00-00000	A26/H28	keyed alike DS200
c)	235-9612.00-00000	A20/H22	keyed different
d)	235-9613.00-00000	A26/H28	keyed different

	Accessories
	1-400 **Inserts for Rod Latches 235 series**
	1-410 **Rod Latch**
	1-415 **Sliding Door Latch**
	1-405 **Rod Latch**
	209-9002 **Sealing kit IP65 for 200-Quarter-Turns**

Quarter-Turns
Accessories
www.METALIKA-KACIN.com

Hooked cam

Hooked cam

ZAMAK RoHS

Hooked cam can be fitted to any standard quarter turn.
A full product data sheet is available on our website.

Part number	Material	Finish	Note	Weight (g)
16-7-4061	zinc die-cast	zinc plated	right	40
16-7-4062	zinc die-cast	zinc plated	left	40

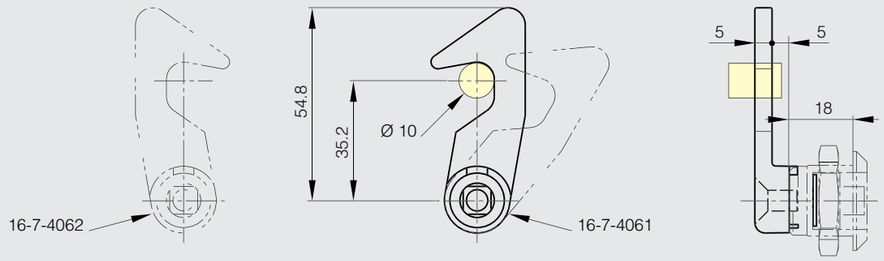

Spring-loaded latches - stop in opening position

Springloaded bolt

NEW

STEEL RoHS

Heavy duty range. No stop when open.

	Part number	Material	Finish	A	B	K	Note	Weight (g)
NEW	16-1-9026	steel	zinc plated	132	50	17	no stop	175

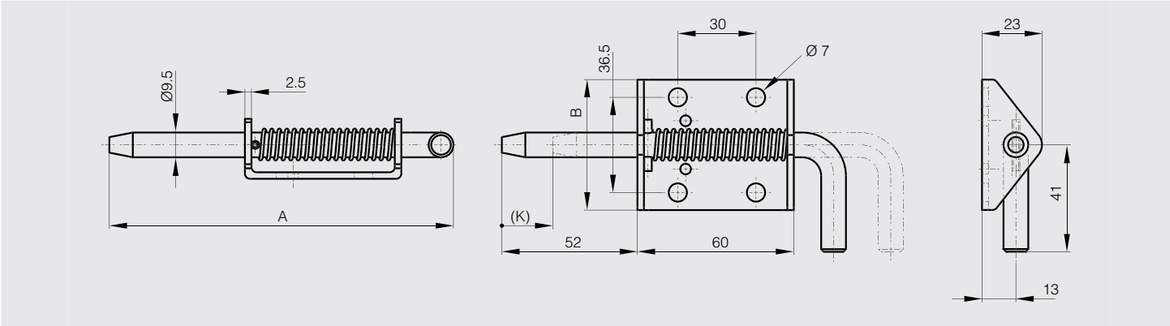

Springloaded latch with round bolt

STEEL RoHS

Part number	Material	Finish	A	B	H	K	S	Weight (g)
16-1-3647	steel	zinc plated	35	43.5	19	10	3.5	21

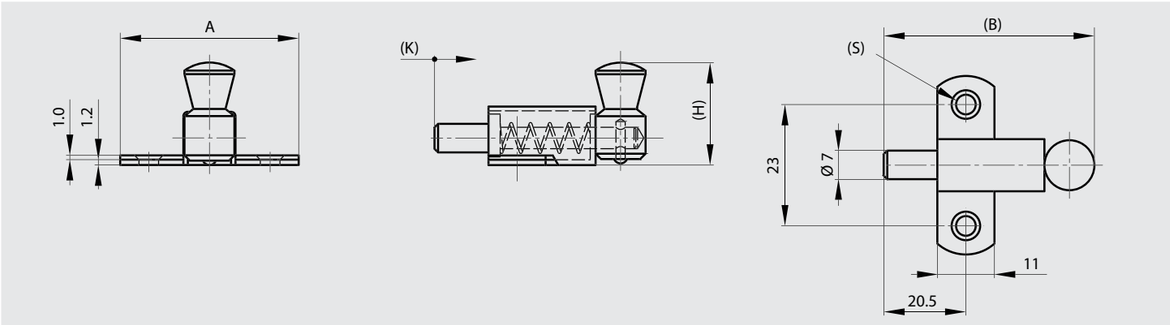

Concealed springloaded pin hinges A

STAINLESS STEEL | STEEL | RoHS

Stainless steel spring. Hinges in raw steel and zinc plated steel with a zinc plated pin. Circlip in 1.4122 stainless steel.

Part number	Material	Finish	A	B	C	D	K	Note	Weight (g)
12-1-3856	steel	raw	82	18.2	2.8	6	12	type 2	46.4
12-1-3857	steel	raw	82	18.2	2.8	6	12	type 1	46.4
12-1-3854	steel	zinc plated	82	18.2	2.8	6	12	type 2	46.4
12-1-3855	steel	zinc plated	82	18.2	2.8	6	12	type 1	46.4
12-1-3858	304 stainless steel	raw	82	18.2	2.8	6	12	type 2	46.4
12-1-3859	304 stainless steel	raw	82	18.2	2.8	6	12	type 1	46.4

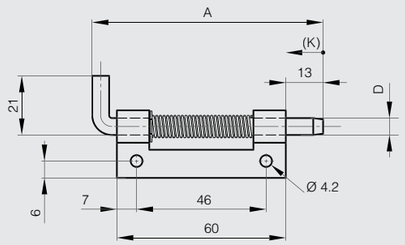

12-1-3857 & 12-1-3855 & 12-1-3859

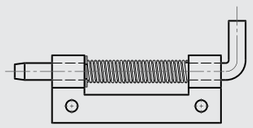

12-1-3856 & 12-1-3854 & 12-1-3858

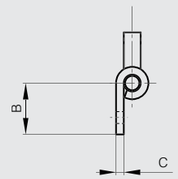

Concealed springloaded pin hinges B

STAINLESS STEEL | STEEL | RoHS

Stainless steel spring. Hinges in raw steel and zinc plated steel with a zinc plated pin. Circlip in 1.4122 stainless steel.

Part number	Material	Finish	A	B	C	D	K	Note	Weight (g)
12-1-3950	steel	raw	82	21	14	5	12	type 2	38.5
12-1-3951	steel	raw	82	21	14	5	12	type 1	38.5
12-1-3860	steel	zinc plated	82	21	14	5	12	type 2	38.5
12-1-3861	steel	zinc plated	82	21	14	5	12	type 1	38.5
12-1-3862	304 stainless steel	raw	82	21	14	5	12	type 2	38.5
12-1-3863	304 stainless steel	raw	82	21	14	5	12	type 1	38.5

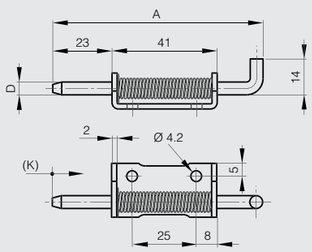

12-1-3951 & 12-1-3861 & 12-1-3863

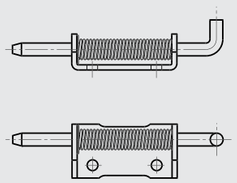

12-1-3950 & 12-1-3860 & 12-1-3862

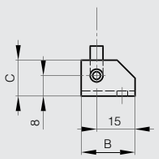

Springloaded bolt with locking system in aluminium

NEW

ALU | RoHS

Stop when open.
Body: clear anodised aluminium.
Shaft and handle: raw aluminium.
Cap: PE, black.
Spring: stainless steel.

	Part number	Material	Finish	A	B	C	Note	Weight (g)
NEW	16-1-4312	6060 T5 alu	clear anodised	60	37	33.5	type 2	58
NEW	16-1-4313	6060 T5 alu	clear anodised	60	37	33.5	type 1	58

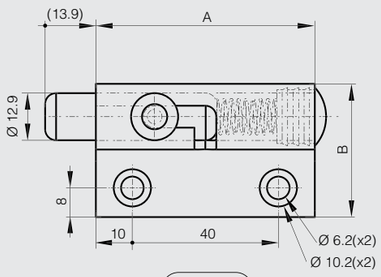

16-1-4312

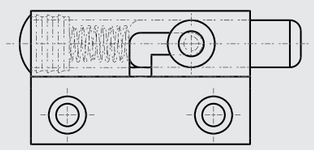

16-1-4313

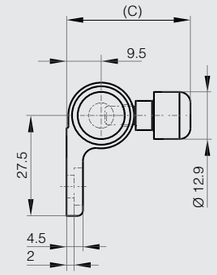

Springloaded bolt with locking system A

STEEL | RoHS

Heavy duty range. Stop when open.

Part number	Material	Finish	A	B	H	K	S	Weight (g)
16-1-4034	steel	zinc plated	152	75	34	20	9	340

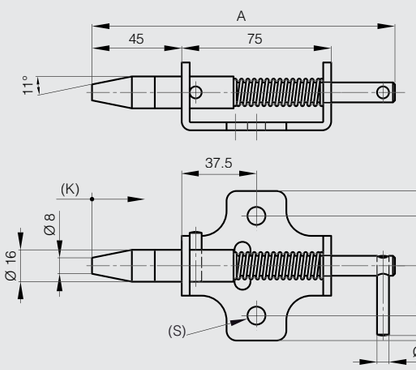

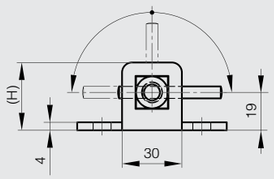

Spring-loaded latches - stop in opening position

Springloaded bolt with locking system B

NEW

STAINLESS STEEL STEEL RoHS

Heavy duty range. Stop when open.

	Part number	Material	Finish	A	B	K	Weight (g)
	16-1-9007	steel	zinc plated	132	50	17	175
NEW	16-1-9025	304 stainless steel	raw	132	50	17	170

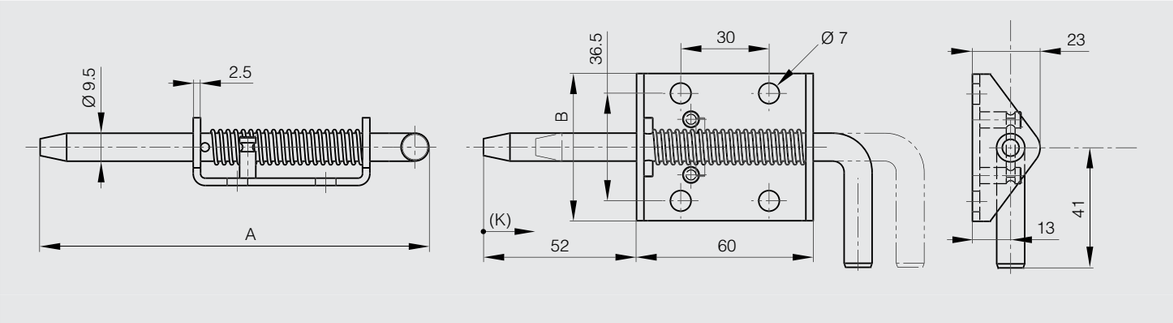

Push barrel bolt

STAINLESS STEEL RoHS

Stainless steel latch with steel shaft and plastic button.

Part number	Material	Finish	A	B	C	Weight (g)
16-1-9008	stainless steel	raw	64	33.5	15	44

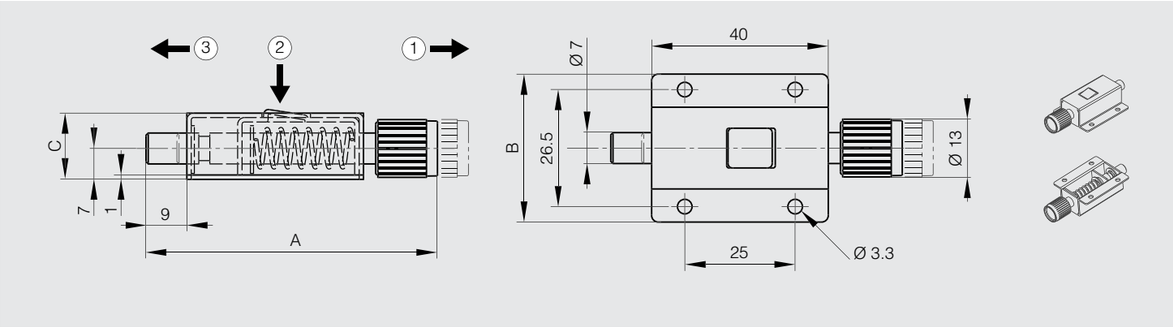

Budget latches

Spring budget latch

STAINLESS STEEL RoHS

Not handed.

Part number	Material	Finish	A	B	C	Note	Weight (g)
16-1-4031	304 stainless steel	deburred	85	53.4	8.5	Budget latch (no strike)	69

Strike for spring budget latch 16-1-4031

STAINLESS STEEL RoHS

Part number	Material	Finish	A	B	C	Note	Weight (g)
16-1-4032	304 stainless steel	deburred	85	17	8.5	strike	48

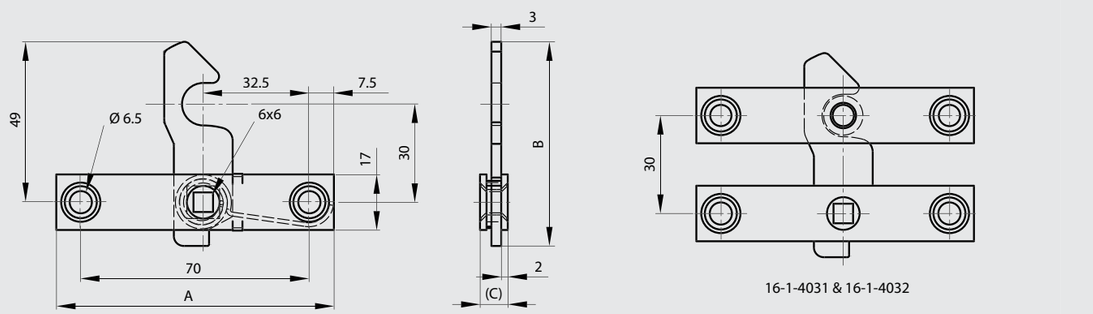

BURG®

Bestes für Schließsysteme.
The best in lock options.

Schiebetürschloss
Sliding door lock

■ Schließweg (90°) rechts und links in einem Schloss ■ Türanschlagdämpfung kann auf Klappe ohne Aufkleben montiert werden ■ Gefederte Rastfunktion der einzelnen Schließstellungen ■ Sehr flacher Aufbau

■ Closing stroke (90°) left and right in the same lock ■ Door stop cushion can be installed on hatch without glue ■ Spring stop function for individual closing positions ■ Very flat construction

BURG F.W. Lüling KG

www.burg.de

www.metalika-kacin.com METALIKA

BURG®

Bestes für Schließsysteme.
The best in lock options.

Einbau Schiebetürschloss
Installation sliding door lock

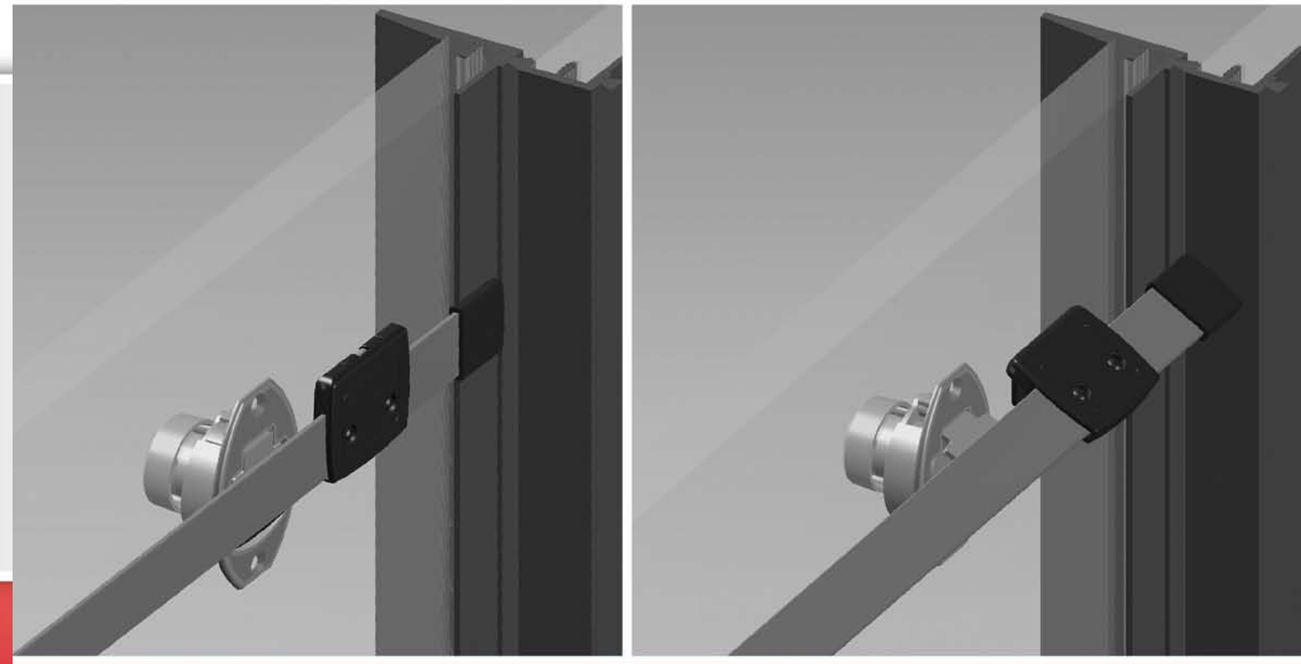

■ Individuelle Längenmaße sind abbildbar ■ Durch die Verwendung der Stangenanbindung, kann das Schloss für mehr als zweitürige Schiebetürschränke verwendet werden ■ Die Stangenanbindung ist auch im Set mit dem Druckzylinder verwendbar ■ Hochwertig eloxierte Oberfläche der Schiebetürstange ■ Scharnier federnd gelagert

■ Individual linear measurements can be illustrated ■ The lock can be powered for sliding door cabinets with more than two doors when using rod connection ■ The rod connection can also be used in the set with the push cylinder ■ Rod connection features a high-quality anodised surface ■ Spring-loaded hinge

www.burg.de

METALIKA www.metalika-kacin.com

Ball shaped door lock

Ball-shaped door lock

Technopolymer

CLAMP
Acetal resin based (POM) technopolymer.

BALL
Glass-fibre reinforced polyamide based (PA) technopolymer, black colour, matte finish.

MOUNTING
Self-tapping screw Ø 4.8 mm. UNI 7981 B or M5 cylindrical head screw with hexagon socket DIN 912.

FEATURES AND APPLICATIONS
BPS ball-shaped door lock (ELESA patent) consists of a clamp to be fixed to a frame and a ball to be fixed to a door.
The clamp, in which the ball fixed to the closing door is inserted, is a mechanical stop device also to the door movement, thanks to its shape.
The screws, that fix the clamp and the ball respectively to the frame and to the door, are identical. Thus, making the assembly easier.
Under specific tests, the clamp showed constant performances for more than 20.000 cycles.
The ball-shaped door lock has been conceived for use with both shutter doors and sliding doors.
The minimum thickness for the profile suitable for use is 15 mm, while the distance between door and frame must be within 2.5 mm and 3.5 mm (fig.1).

ACCESSORIES ON REQUEST
BPS.30-SP: acetal based (POM) technopolymer spacers kit 5, 10, 15 mm (sold separately), black colour in order to compensate possible differences in width between frame and door.

Fig.1

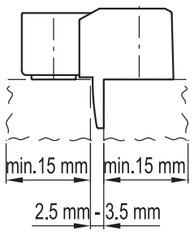

Examples of BPS.30-SP spacers assembly

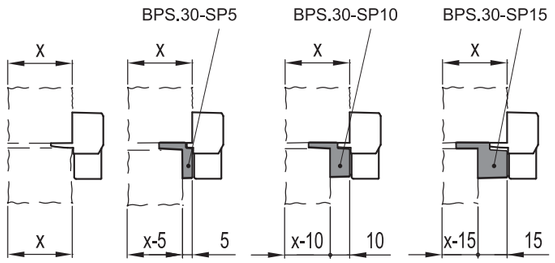

Thickness differences between frame and door	Spacer to be used	Description
0	-	-
5 mm	5 mm	BPS.30-SP5
10 mm	10 mm	BPS.30-SP10
15 mm	15 mm	BPS.30-SP15
20 mm	10 mm + 10 mm	BPS.30-SP10 + BPS.30-SP10
25 mm	10 mm + 15 mm	BPS.30-SP10 + BPS.30-SP15
30 mm	15 mm + 15 mm	BPS.30-SP15 + BPS.30-SP15

Application examples

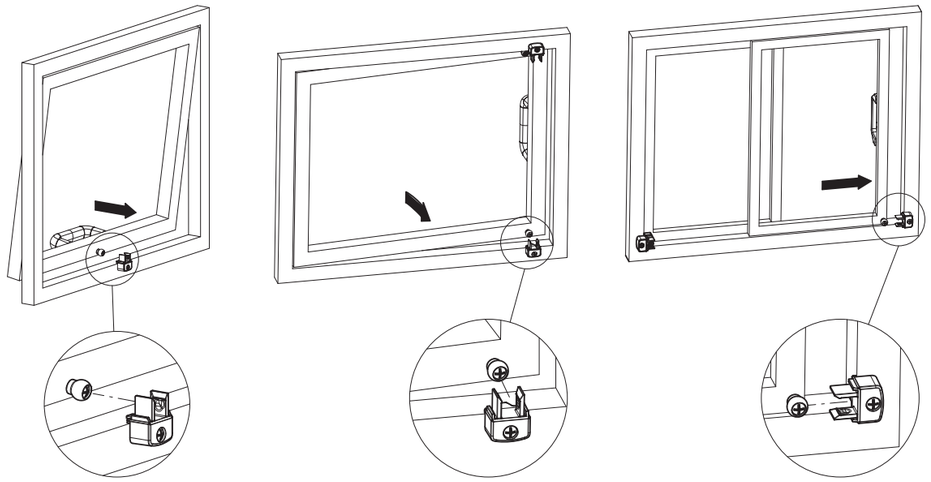

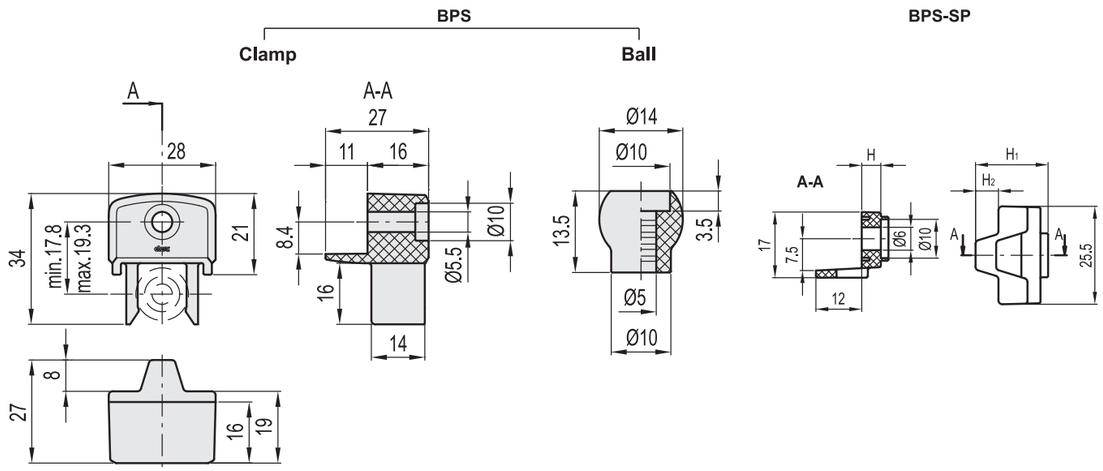

BPS

Code	Description	Opening release strength [N]	⚖
6251	BPS.30	30	10

BPS-SP

Code	Description	H	H1	H2	⚖
6253	BPS.30-SP5	5	19	6	3
6254	BPS.30-SP10	10	23	8	4
6255	BPS.30-SP15	15	28	9	5

www.metalika-kacin.com

Spring latches

SPECIFICATION

Types

- Type **S**: with locking, without rest position
- Type **L1**: Locking / Rest position via counterclockwise rotation
- Type **R1**: Locking / Rest position via clockwise rotation

Guide
Zinc die casting
plastic coated, RAL 9005, textured finish

Plunger pin
Steel
zinc plated, blue passivated

Spring
Stainless Steel AISI 301

Latch lever
Plastic, Technopolymer (Polyamide PA)

- black, matte
- not removable

INFORMATION

The plunger of spring latches GN 416 is operated by an axial pulling of the latch lever. This kind of operation from the top side is advantageous in certain installation situations.
The pins of Type S spring latches are engaged in the housing to prevent rotation, and therefore lock in the starting position but not the retracted position. Types R1 and L1 spring latches offer a locking function in the starting as well as in the retracted position, preventing an unintentional operation. A lock notch holds the latch lever in both positions.
The adjustment range is designed in such a way that ISO 7092 washers can be used within the adjustment slot in the housing.

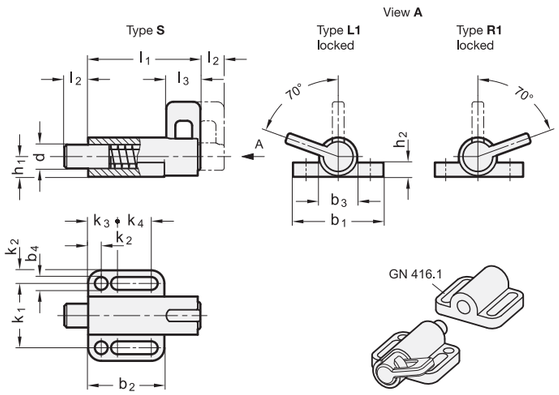

GN 416

Description	d Pin -0.05 Bore +0.1/+0.05	b1	b2	b3	b4	h1	h2	k1	k2	k3	k4	l1	l2 min.	l3	Spring load in N ≈ initial	Spring load in N ≈ end	⚖
GN 416-6-38-L1	6	38	32	16	5.4	8.5	6	27	5.5	12	14.5	47	10	14	21	27	67
GN 416-8-38-L1	8	38	32	16	5.4	8.5	6	27	5.5	12	14.5	47	10	14	21	27	69
GN 416-8-46-L1	8	46	40	20	6.4	11	6	33	6.5	14.5	19	59	12	17	25	38	130
GN 416-10-38-L1	10	38	32	16	5.4	8.5	6	27	5.5	12	14.5	47	10	14	21	27	72
GN 416-10-46-L1	10	46	40	20	6.4	11	6	33	6.5	14.5	19	59	12	17	25	38	132
GN 416-12-46-L1	12	46	40	20	6.4	11	6	33	6.5	14.5	19	59	12	17	25	38	136
GN 416-6-38-S	6	38	32	16	5.4	8.5	6	27	5.5	12	14.5	47	10	14	21	27	68
GN 416-8-38-S	8	38	32	16	5.4	8.5	6	27	5.5	12	14.5	47	10	14	21	27	69
GN 416-8-46-S	8	46	40	20	6.4	11	6	33	6.5	14.5	19	59	12	17	25	38	140
GN 416-10-38-S	10	38	32	16	5.4	8.5	6	27	5.5	12	14.5	47	10	14	21	27	70
GN 416-10-46-S	10	46	40	20	6.4	11	6	33	6.5	14.5	19	59	12	17	25	38	132
GN 416-12-46-S	12	46	40	20	6.4	11	6	33	6.5	14.5	19	59	12	17	25	38	135
GN 416-6-38-R1	6	38	32	16	5.4	8.5	6	27	5.5	12	14.5	47	10	14	21	27	66
GN 416-8-38-R1	8	38	32	16	5.4	8.5	6	27	5.5	12	14.5	47	10	14	21	27	69
GN 416-8-46-R1	8	46	40	20	6.4	11	6	33	6.5	14.5	19	59	12	17	25	38	120
GN 416-10-38-R1	10	38	32	16	5.4	8.5	6	27	5.5	12	14.5	47	10	14	21	27	71
GN 416-10-46-R1	10	46	40	20	6.4	11	6	33	6.5	14.5	19	59	12	17	25	38	150
GN 416-12-46-R1	12	46	40	20	6.4	11	6	33	6.5	14.5	19	59	12	17	25	38	135

Locators

for spring latches GN 416

SPECIFICATION
Zinc die casting
plastic coated
black, RAL 2005, textured finish

INFORMATION

Locators GN 416.1 are matched to the spring latches GN 416 and are used to position the indexing pin.

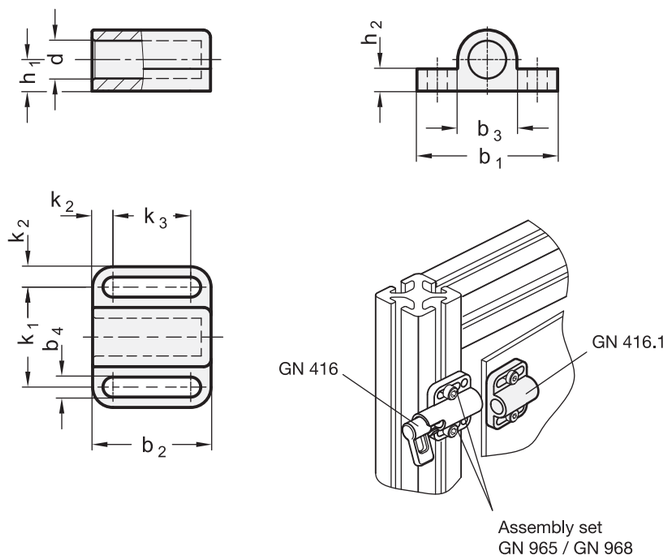

GN 416.1

Description	d Nominal dimension	d Actual dimension +0.15/-0.05	b1	b2	b3	b4	h1	h2	k1	k2	k3	⚖
GN 416.1-6-38	6	6.2	38	28	16	5.4	8.5	6	27	5.5	17	51
GN 416.1-8-38	8	8.2	38	28	16	5.4	8.5	6	27	5.5	17	47
GN 416.1-8-46	8	8.2	46	38	20	6.4	11	6	33	6.5	25	94
GN 416.1-10-38	10	10.2	38	28	16	5.4	8.5	6	27	5.5	17	20
GN 416.1-10-46	10	10.2	46	38	20	6.4	11	6	33	6.5	25	87
GN 416.1-12-46	12	12.2	46	38	20	6.4	11	6	33	6.5	25	79

Spring latches

Spring latches

with flange for surface mounting

INOX STAINLESS STEEL · RoHS

SPECIFICATION

Types

- Type **L**: left indexing cam
- Type **R**: right indexing cam

Version in Steel

Guide
Steel precision cast

zinc plated, blue passivated **ZB**

zinc plated and plastic coated
black, textured finish **SW**

Latch / Pin
Steel, zinc plated, blue passivated

Spring
Stainless Steel AISI 301

Version in Stainless Steel

Guide / Latch
Stainless Steel precision casting **A4**
weldable, AISI 316

Pin
Stainless Steel AISI 316

Spring
Stainless Steel AISI 316Ti

INFORMATION

Spring latches GN 722.3 are used when the indexing pin is temporarily not allowed to protrude. The indexing pin retracts by turning the latch by 180°. A lock notch will hold the latch in both positions.
Spring latches GN 722.3 are designed for use in **steel construction** or in **locksmith shops** where less precise positioning / locking is normally required. The dimensional tolerances are therefore chosen to ensure that functional safety is guaranteed under dirt exposure and that cost-effetive production methods are used.

- Range of cam action indexing plungers (see page 816)

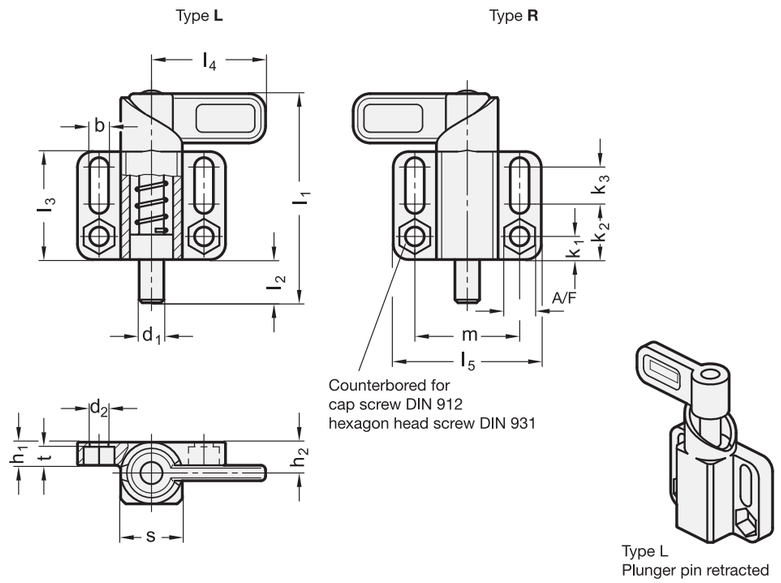

GN 722.3

Description	d Pin -0.05/-0.25 Bore +0.1/+0.3	s	d2 +0.2	h1	h2	k1	k2	k3	l1 ≈	l2	l3	l4	l5	m	A/F	t	Spring load in N ≈ initial	Spring load in N ≈ end	⚖
GN 722.3-8-20-R-SW	8	20	6.1	7.5	10	7.5	18	12	68	14	35	37	48	34	10	6.1	16	55	179
GN 722.3-8-20-R-ZB	8	20	6.1	7.5	10	7.5	18	12	68	14	35	37	48	34	10	6.1	16	55	179
GN 722.3-10-20-R-SW	10	20	6.1	7.5	10	7.5	18	12	68	14	35	37	48	34	10	6.1	16	55	180
GN 722.3-10-20-R-ZB	10	20	6.1	7.5	10	7.5	18	12	68	14	35	37	48	34	10	6.1	16	55	181
GN 722.3-12-20-R-SW	12	20	6.1	7.5	10	7.5	18	12	68	14	35	37	48	34	10	6.1	16	55	186
GN 722.3-12-20-R-ZB	12	20	6.1	7.5	10	7.5	18	12	68	14	35	37	48	34	10	6.1	16	55	184
GN 722.3-14-20-R-SW	14	20	6.1	7.5	10	7.5	18	12	68	14	35	37	48	34	10	6.1	16	55	190
GN 722.3-14-20-R-ZB	14	20	6.1	7.5	10	7.5	18	12	68	14	35	37	48	34	10	6.1	16	55	191
GN 722.3-8-20-L-SW	8	20	6.1	7.5	10	7.5	18	12	68	14	35	37	48	34	10	6.1	16	55	178
GN 722.3-8-20-L-ZB	8	20	6.1	7.5	10	7.5	18	12	68	14	35	37	48	34	10	6.1	16	55	176
GN 722.3-10-20-L-SW	10	20	6.1	7.5	10	7.5	18	12	68	14	35	37	48	34	10	6.1	16	55	180
GN 722.3-10-20-L-ZB	10	20	6.1	7.5	10	7.5	18	12	68	14	35	37	48	34	10	6.1	16	55	180
GN 722.3-12-20-L-SW	12	20	6.1	7.5	10	7.5	18	12	68	14	35	37	48	34	10	6.1	16	55	180
GN 722.3-12-20-L-ZB	12	20	6.1	7.5	10	7.5	18	12	68	14	35	37	48	34	10	6.1	16	55	183
GN 722.3-14-20-L-SW	14	20	6.1	7.5	10	7.5	18	12	68	14	35	37	48	34	10	6.1	16	55	180
GN 722.3-14-20-L-ZB	14	20	6.1	7.5	10	7.5	18	12	68	14	35	37	48	34	10	6.1	16	55	186

GN 722.3-A4 — **STAINLESS STEEL**

Description	d Pin -0.05/-0.25 Bore +0.1/+0.3	s	d2 +0.2	h1	h2	k1	k2	k3	l1 ≈	l2	l3	l4	l5	m	A/F	t	Spring load in N ≈ initial	Spring load in N ≈ end	⚖
GN 722.3-8-20-R-A4	8	20	6.1	7.5	10	7.5	18	12	68	14	35	37	48	34	10	6.1	16	45	179
GN 722.3-10-20-R-A4	10	20	6.1	7.5	10	7.5	18	12	68	14	35	37	48	34	10	6.1	16	45	182
GN 722.3-12-20-R-A4	12	20	6.1	7.5	10	7.5	18	12	68	14	35	37	48	34	10	6.1	16	45	181
GN 722.3-14-20-R-A4	14	20	6.1	7.5	10	7.5	18	12	68	14	35	37	48	34	10	6.1	16	45	181
GN 722.3-8-20-L-A4	8	20	6.1	7.5	10	7.5	18	12	68	14	35	37	48	34	10	6.1	16	45	180
GN 722.3-10-20-L-A4	10	20	6.1	7.5	10	7.5	18	12	68	14	35	37	48	34	10	6.1	16	45	180
GN 722.3-12-20-L-A4	12	20	6.1	7.5	10	7.5	18	12	68	14	35	37	48	34	10	6.1	16	45	181
GN 722.3-14-20-L-A4	14	20	6.1	7.5	10	7.5	18	12	68	14	35	37	48	34	10	6.1	16	45	181

Spring latches

Spring latches

with flange for surface mounting

INOX STAINLESS STEEL RoHS

SPECIFICATION

Types

- Type **A**: Latch position right-angled to fixing holes
- Type **B**: Latch position parallel to fixing holes

Version in Steel

Guide
Steel precision cast

zinc plated, blue passivated **ZB**

zinc plated and plastic coated
black, textured finish **SW**

Latch / Pin
zinc plated, blue passivated

Spring
Stainless Steel AISI 301

Version in Stainless Steel

Guide / Latch
Stainless Steel precision casting **A4**
weldable, AISI 316

Pin
Stainless Steel AISI 316

Spring
Stainless Steel AISI 316Ti

INFORMATION

Spring latches GN 722.2 are used when the indexing pin is temporarily not allowed to protrude. The indexing pin retracts by turning the latch by 180°. A lock notch will hold the latch in both positions.
Spring latches GN 722.2 are designed for use in **steel construction** or in **locksmith shops** where less precise positioning / locking is normally required. The dimensional tolerances are therefore chosen to ensure that functional safety is guaranteed under dirt exposure and that cost-effetive production methods are used.

- Range of cam action indexing plungers (see page 816)

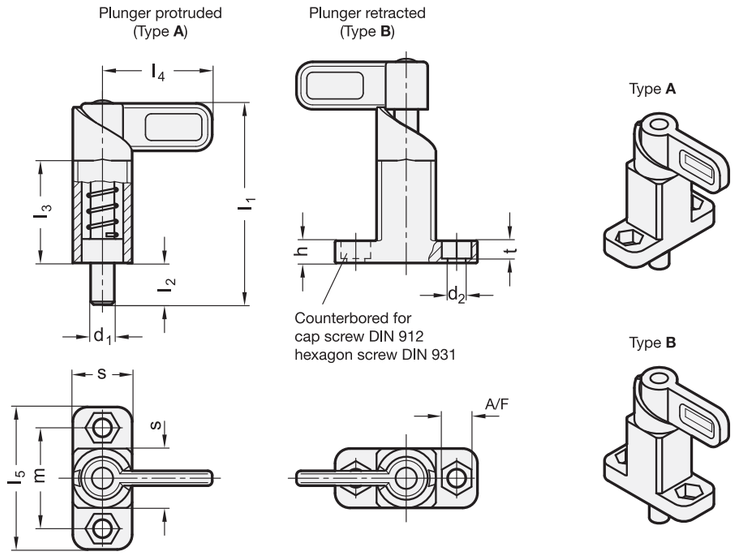

GN 722.2

Description	d Pin -0.05/-0.25 Bore +0.1/+0.3	s	d2 +0.2	h	l1 ≈	l2	l3	l4	l5	m	A/F	t	Spring load in N ≈ initial	Spring load in N ≈ end	⚖
GN 722.2-8-20-A-SW	8	20	6.1	7.5	68	14	35	37	48	34	10	6.1	16	55	160
GN 722.2-8-20-A-ZB	8	20	6.1	7.5	68	14	35	37	48	34	10	6.1	16	55	162
GN 722.2-10-20-A-SW	10	20	6.1	7.5	68	14	35	37	48	34	10	6.1	16	55	168
GN 722.2-10-20-A-ZB	10	20	6.1	7.5	68	14	35	37	48	34	10	6.1	16	55	170
GN 722.2-12-20-A-SW	12	20	6.1	7.5	68	14	35	37	48	34	10	6.1	16	55	172
GN 722.2-12-20-A-ZB	12	20	6.1	7.5	68	14	35	37	48	34	10	6.1	16	55	171
GN 722.2-14-20-A-SW	14	20	6.1	7.5	68	14	35	37	48	34	10	6.1	16	55	175
GN 722.2-14-20-A-ZB	14	20	6.1	7.5	68	14	35	37	48	34	10	6.1	16	55	176
GN 722.2-8-20-B-SW	8	20	6.1	7.5	68	14	35	37	48	34	10	6.1	16	55	160
GN 722.2-8-20-B-ZB	8	20	6.1	7.5	68	14	35	37	48	34	10	6.1	16	55	160
GN 722.2-10-20-B-SW	10	20	6.1	7.5	68	14	35	37	48	34	10	6.1	16	55	170
GN 722.2-10-20-B-ZB	10	20	6.1	7.5	68	14	35	37	48	34	10	6.1	16	55	170
GN 722.2-12-20-B-SW	12	20	6.1	7.5	68	14	35	37	48	34	10	6.1	16	55	170
GN 722.2-12-20-B-ZB	12	20	6.1	7.5	68	14	35	37	48	34	10	6.1	16	55	170
GN 722.2-14-20-B-SW	14	20	6.1	7.5	68	14	35	37	48	34	10	6.1	16	55	175
GN 722.2-14-20-B-ZB	14	20	6.1	7.5	68	14	35	37	48	34	10	6.1	16	55	175

GN 722.2-A4 — **STAINLESS STEEL**

Description	d Pin -0.05/-0.25 Bore +0.1/+0.3	s	d2 +0.2	h	l1 ≈	l2	l3	l4	l5	m	A/F	t	Spring load in N ≈ initial	Spring load in N ≈ end	⚖
GN 722.2-8-20-A-A4	8	20	6.1	7.5	68	14	35	37	48	34	10	6.1	16	45	166
GN 722.2-10-20-A-A4	10	20	6.1	7.5	68	14	35	37	48	34	10	6.1	16	45	169
GN 722.2-12-20-A-A4	12	20	6.1	7.5	68	14	35	37	48	34	10	6.1	16	45	174
GN 722.2-14-20-A-A4	14	20	6.1	7.5	68	14	35	37	48	34	10	6.1	16	45	180
GN 722.2-8-20-B-A4	8	20	6.1	7.5	68	14	35	37	48	34	10	6.1	16	45	166
GN 722.2-10-20-B-A4	10	20	6.1	7.5	68	14	35	37	48	34	10	6.1	16	45	170
GN 722.2-12-20-B-A4	12	20	6.1	7.5	68	14	35	37	48	34	10	6.1	16	45	176
GN 722.2-14-20-B-A4	14	20	6.1	7.5	68	14	35	37	48	34	10	6.1	16	45	180

METALIKA www.metalika-kacin.com

Spring latches

for welding

SPECIFICATION

Version in Steel

Guide
Steel precision casting **ST**
blackened, weldable

Latch
Steel precision casting
zinc plated, blue passivated

Pin
Steel, zinc plated, blue passivated

Spring
Stainless Steel AISI 301

Version in Stainless Steel

Guide / Latch
Stainless Steel precision casting **A4**
weldable, AISI 316

Pin
Stainless Steel AISI 316

Spring
Stainless Steel AISI 316Ti

INFORMATION

Spring latches GN 722.1 are used when the indexing pin is temporarily not allowed to protrude. The indexing pin retracts by turning the latch by 180°. A lock notch will hold the latch in both positions.
The square bar allows the latch to be welded in any desired position. To prevent excessive heating up and the resulting change in the spring properties, fixing with welding spots is recommended.
Spring latches GN 722.1 are designed for use in **steel construction** or in **locksmith** shops where less precise positioning / locking is normally required. The dimensional tolerances are therefore chosen to ensure that functional safety is guaranteed under dirt exposure and that cost-effetive production methods are used.

- Range of cam action indexing plungers (see page 816)

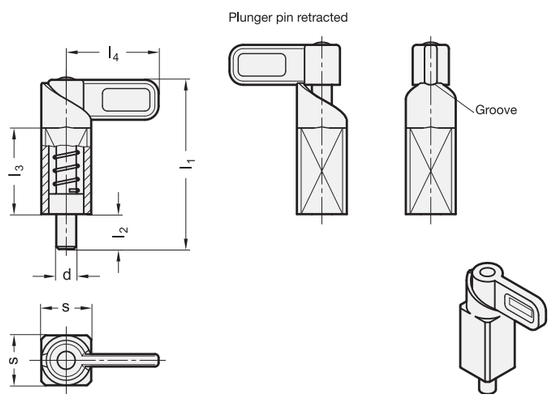

GN 722.1

Description	d Pin -0.05/-0.25 Bore +0.1/+0.3	s	l1 ≈	l2	l3	l4	Spring load in N ≈ initial	Spring load in N ≈ end	⚖
GN 722.1-8-20-ST	8	20	68	14	35	37	16	55	141
GN 722.1-10-20-ST	10	20	68	14	35	37	16	55	144
GN 722.1-12-20-ST	12	20	68	14	35	37	16	55	148
GN 722.1-14-20-ST	14	20	68	14	35	37	16	55	153

GN 722.1-A4 STAINLESS STEEL

Description	d Pin -0.05/-0.25 Bore +0.1/+0.3	s	l1 ≈	l2	l3	l4	Spring load in N ≈ initial	Spring load in N ≈ end	⚖
GN 722.1-8-20-A4	8	20	68	14	35	37	16	45	150
GN 722.1-10-20-A4	10	20	68	14	35	37	16	45	153
GN 722.1-12-20-A4	12	20	68	14	35	37	16	45	158
GN 722.1-14-20-A4	14	20	68	14	35	37	16	45	169

Schiebetürschlösser

Art.-Nr.: 10740
Mat.: St., schwarz lackiert
Innenteile galvanisch verzinkt
Dornmaß ca. 30 mm
Innensicherung durch umlegen des Hebels
8 mm Vierkantnuss zur Betätigung
links, wie Abbildung

Art.-Nr.: 10741
Mat.: St., schwarz lackiert
Innenteile galvanisch verzinkt
Dornmaß ca. 30 mm
Innensicherung durch umlegen des Hebels
8 mm Vierkantnuss zur Betätigung
rechts, entgegen Abbildung

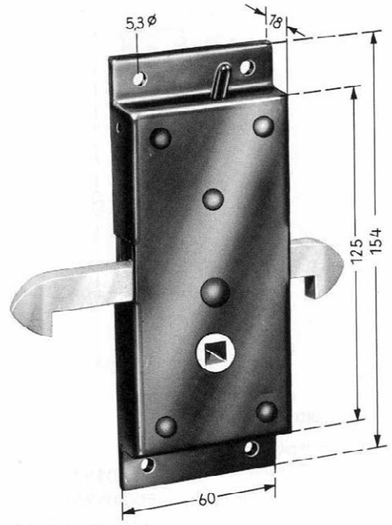

Schließraste

Mat.: GTW
zu Art.-Nr.: 10740 / 10741

Art.-Nr.: 10742

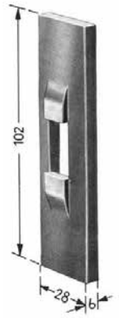

Schiebetürschlösser

Art.-Nr.: 10744
Mat.: St., galvanisch verzinkt
Dornmaß ca. 13 mm
8 mm Vierkantnuss zur Betätigung
links wie Abbildung

Art.-Nr.: 10745
Mat.: St., galvanisch verzinkt
Dornmaß ca. 13 mm
8 mm Vierkantnuss zur Betätigung
rechts, entgegen Abbildung

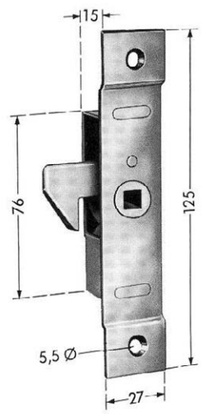

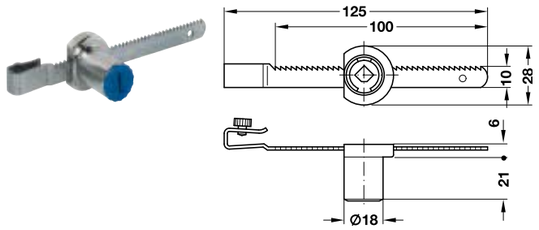

> Area of application:	For cylinder cores that are inserted from the front on site
> Material:	Lock case: Zinc alloy, rack: Stainless steel
> For glass door thickness:	4–7 mm
> Installation:	Rack for clipping on, cylinder for sliding onto rack

Installation

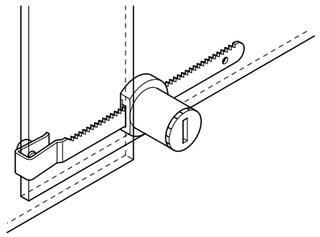

For Infront glass sliding doors:
Rack is clamped onto the rear glass panel. Clip on lock and allow to engage in the rack. In order to unlock, remove the lock from the rack and put aside.

Finish	Cat. No.
Lock case: Matt nickel plated	C233.44.600

Packing: 1 or 20 pieces

Furniture Locks
With fixed plate cylinder

Glass sliding door lock

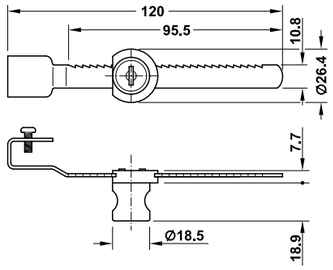

> Material:	Housing: Zinc alloy
> Finish:	Polished chrome plated
> For glass door thickness:	3–6 mm
> Locking system:	With 6 plate levers
> Key change:	240 different key changes possible
> Installation:	Rack for clamp fixing, cylinder for sliding onto rack

Installation

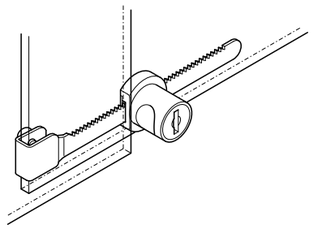

For Infront glass sliding doors:
Rack is clamped onto the rear glass pane. Clip on lock and allow to engage in the rack. In order to unlock, remove the lock from the rack and put aside.

→ Standard profile

Supplied with
1 lock case
1 rack
2 folding keys

Key change	Cat. No.
Keyed to differ	C233.20.450
Keyed alike	C233.20.451

Packing: 1 or 12 pieces

Glass door plug-in cylinder lock
For glass sliding doors

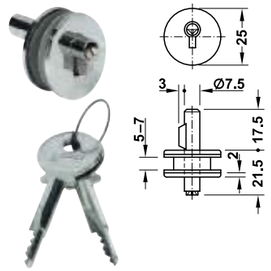

> Material:	Housing: Zinc alloy, cylinder lock blocking key: Steel
> Finish:	Chrome plated
> For glass door thickness:	5–7 mm
> Locking system:	With 3 pin tumblers
> Key change:	50 different key changes possible
> Installation:	For screw fixing

Installation

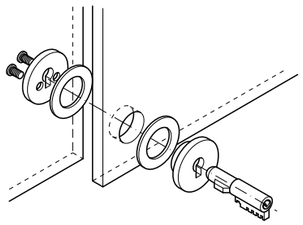

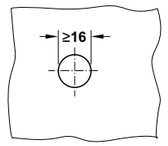

Drilling pattern

Supplied with
1 glass door plug-in cylinder lock with fixing material
2 keys

→ Standard profile

Key change	Cat. No.
801–850 – keyed to differ	C233.22.207
851 – keyed alike	C233.22.217

Packing: 1 or 50 sets

SMF Flush Entry Door Lock

- Allows for 100 - 150mm (4”- 6”) more door travel than traditional sliding-door lock styles
- Safety lock prevents the door from being locked from the inside.
  To activate: turn key clockwise and remove
- Shipped with striker and two keys
- Locks can be matched to other ***SOUTHCO***® deck latches.
  Contact Southco for more information

Material and Finish:

Stainless Steel, Aluminum anodized, Black anodized or White powdercoat.
Shape: Oval or rectangular design.

Available Options:

Sealing: Weatherproof and watertight seals.

Flush Oval

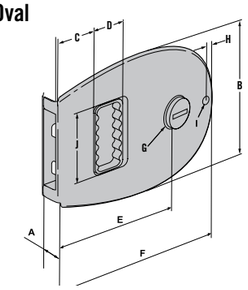

	Imperial		Metric
	Nominal	Decimal	
A	1/2	.50	12.7
B	3 7/8	3.88	98.5
C	49/64	.77	19.5
D	49/64	.77	19.6
E	3 3/4	3.74	95
F	5 53/64	5.83	148
G	53/64	.83	21
H	33/64	.51	13
I	13/64	.2	5
J	1 3/4	1.75	44.5

Flush

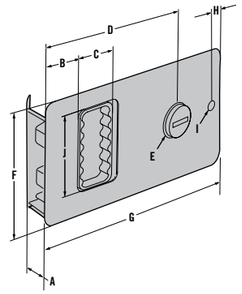

	Imperial		Metric
	Nominal	Decimal	
A	1/2	.50	12.7
B	1 1/8	1.12	28.5
C	25/32	.77	20
D	3 49/64	3.76	95.5
E	53/64	.83	21
F	2 7/8	2.88	73
G	5 9/32	5.28	134
H	21/64	.34	8.5
I	15/64	.24	6
J	1 3/4	1.75	44.5

Panel Preparation

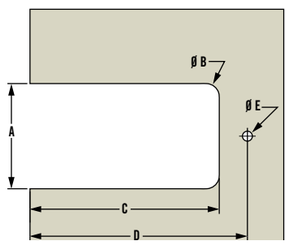

Flush Square

	Imperial		Metric
	Nominal	Decimal	
A	2 1/2	2.5	63.5
B	5/8	.63	16
C	4 1/2	4.5	114
D	4 61/64	4.95	125.7
E	1/4	.25	6.4

Flush Oval

	Imperial		Metric
	Nominal	Decimal	
A	2 1/2	2.5	63.5
B	5/8	.63	16
C	4 1/2	4.5	114
D	5 5/16	5.31	135
E	1/4	.25	6.35

Flush Part Numbers

Style	Aluminum	Stainless steel	Black	White	Oval
Standard	SMF_01_110_60	SMF_01_110_24	SMF_01_110_50	SMF_01_110_70	SMF_01_310_24
Weather Proof	SMF_02_110_60	SMF_02_110_24	SMF_02_110_50	SMF_02_110_70	SMF_02_310_24
Watertight	SMF_03_110_60	SMF_03_110_24	SMF_03_110_50	SMF_03_110_70	SMF_03_310_24

Dimensions in millimeters (inch) unless otherwise stated

SMF ProFlush Entry Door Lock

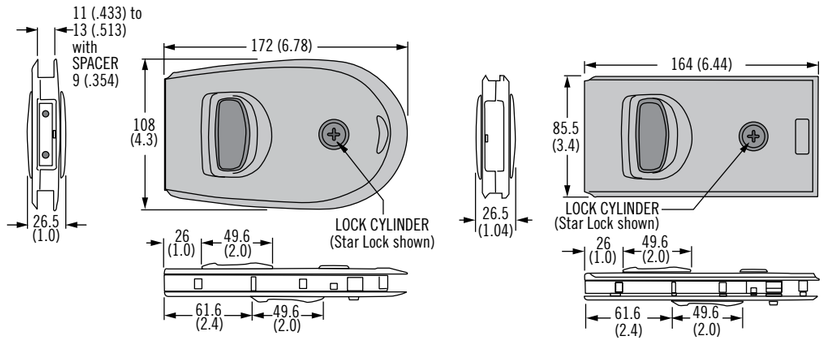

Panel Preparation

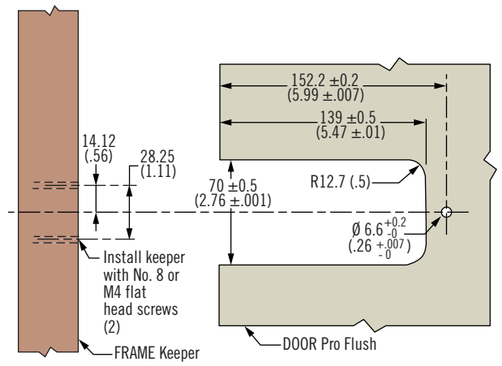

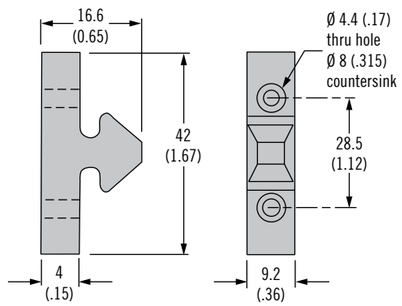

	Part Number	
Pro Flush Latch*	Oval	Square
Star Lock	SMF_05_430_24	SMF_05_530_24
Disc Tumbler Lock	SMF_05_450_24	SMF_05_550_24

Accessories	Part Number
Oval Spacer	SMF_92_400_24
Square Spacer	SMF_92_500_24
Mounting Tool	SMF_90_400_10

* Two grip friendly overmolded keys and a keeper supplied.

For spare keys please contact

- Marine grade materials to prevent corrosion
- Sealed to help prevent water intrusion
- Available with two types of lock plugs
  - Star lock system, provides high security with a pin tumbler lock plug
  - 3 wafer flat key (MIM) lock, provides security with a stainless steel plug and has a reversible key
- Oval and square variant available

Material and Finish

Escutcheon: Stainless steel, highly polished
Handles: Polycarbonate/polyester, black
Privacy knob: Nylon, black

Dimensions in millimeters (inch) unless otherwise stated

SMM Talon Sliding Entry Door Latch

Flush style, star and standard

- New superior Star Key Lock capability provides enhanced, three-axis pin tumbler security
- Top-stop latching feature provides option to secure door in the full open, full closed, or partially open positions, prevents accidental closing even in rough seas
- Attractive flush face design provides sleek look that complements a wide range of boats
- Optional high-seas handle provides sturdy grip for both latch and door operation
- Designed for doors in stainless steel and aluminum extrusions

Material and Finish

Escutcheons, outside plate: Brass, chrome plated and aluminum, black powder coat

Privacy knob: Brass, chrome plated

Panel Preparation

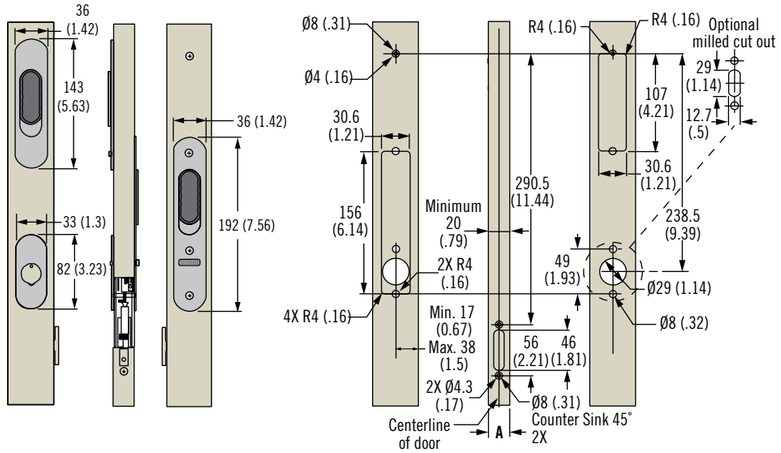

Star Part Numbers					
Finish	Style	Door Thickness (A)			
		20.5 (0.81) - 23 (0.91)	23 (0.91) - 28.5 (1.12)	28.5 (1.12) - 33.5 (1.32)	33.5 (1.32) - 38 (1.50)
Chrome	Standard	SMM_01_130_10	SMM_01_131_10	SMM_01_132_10	SMM_01_133_10
	Standard Top Stop feature	SMM_01_430_10	SMM_01_431_10	SMM_01_432_10	SMM_01_433_10
Black Powder Coated	Standard	SMM_01_130_50	SMM_01_131_50	SMM_01_132_50	SMM_01_133_50
	Standard Top Stop feature	SMM_01_430_50	SMM_01_431_50	SMM_01_432_50	SMM_01_433_50

Talon Part Numbers				
Without Key locking* (egress opening from outside)	Door Thickness Range			
	20.5 (.81) - 23 (.91)	22.5 (.87) - 27 (1.06)	27 (1.06) - 34.5 (1.38)	28.5 (1.13) - 38 (1.5)
Anodized aluminum	SMM_01_100_60	SMM_01_101_60	SMM_01_102_60	SMM_01_103_60
Powder coated black aluminum	SMM_01_100_50	SMM_01_101_50	SMM_01_102_50	SMM_01_103_50
Chrome	SMM_01_100_10	SMM_01_101_10	SMM_01_102_10	SMM_01_103_10
Key locking				
Anodized aluminum	SMM_01_110_60	SMM_01_111_60	SMM_01_112_60	SMM_01_113_60
Powder coated black aluminum	SMM_01_110_50	SMM_01_111_50	SMM_01_112_50	SMM_01_113_50
Chrome	SMM_01_110_10	SMM_01_111_10	SMM_01_112_10	SMM_01_113_10

Talon Accessories	
Mounting tool for striker	SMM_90_103_41
Top Stop	SMM_7521
High-seas handles for chrome Talon	SMM_7660
High-seas handles for black Talon	SMM_7683
Ramp for Top Stop	SMM_90_201_60

For top stop installation please refer to website.

For high seas handle installation please refer to website.

Dimensions in millimeters (inch) unless otherwise stated

SMM Star Slider Entry Door Latch

Handle style

- Superior Star Key Lock™ capability provides enhanced three-axis pin tumbler security
- A one-piece pivot actuation latch with integrated lock mechanism provides reliable performance and a smooth, ergonomic feel in use
- Pivot handle on both sides
- Top-stop latching feature provides option to secure door in the full open, full closed, or partially open positions, prevents accidental closing even in rough seas
- Designed for doors in stainless steel and aluminium extrusions

Material and Finish

Handle: Stainless steel, highly polished

Eschutcheon, privacy knob: Brass, chrome plated

Panel Preparation

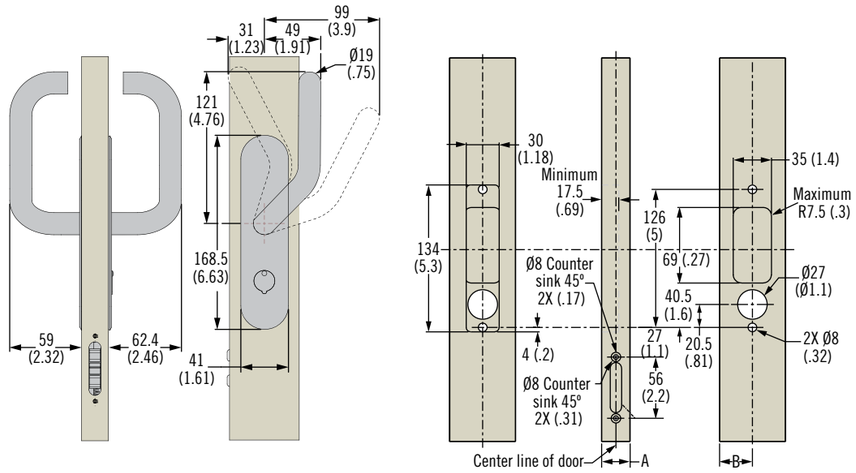

Latch Module Options

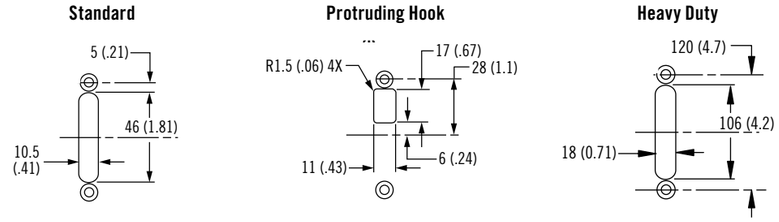

Star Slider Part Numbers			
Latch Module	Door thickness (A)		
	23 (0.93) - 28.5 (1.12)	28.5 (1.12) - 33.5 (1.32)	33.5 (1.32) - 38 (1.50)
Standard	SMM_03_131_14_10	SMM_03_132_14_10	SMM_03_133_14_10
Protruding hook	SMM_03_331_14_10	SMM_03_332_14_10	SMM_03_333_14_10
Standard top stop feature	SMM_03_431_14_10	SMM_03_432_14_10	SMM_03_433_14_10
Heavy Duty	SMM_03_531_14_10	SMM_03_532_14_10	SMM_03_533_14_10
Protruding hook, top stop feature	SMM_03_631_14_10	SMM_03_632_14_10	SMM_03_633_14_10

Star Slider Accessories	
Mounting tool for striker	SMM_90_103_41
Top Stop	SMM_7521
Ramp for top stop	SMM_90_201_60

Dimensions in millimeters (inch) unless otherwise stated

SMM Star Slider Entry Door Latch

Flush inside style

- **Superior Star Key Lock™ capability provides enhanced three-axis pin tumbler security**
- **A one-piece pivot actuation latch with integrated lock mechanism provides reliable performance and a smooth, ergonomic feel in use**
- **Flush version with pivot handle on the outside and flush handle on the inside**
- **Top-stop latching feature provides option to secure door in the full open, full closed, or partially open positions, prevents accidental closing even in rough seas**
- **Designed for doors in stainless steel and aluminium extrusions**

Material and Finish

Escutcheons, outside plate: Brass, chrome plated

Privacy knob: Brass, chrome plated

Panel Preparation

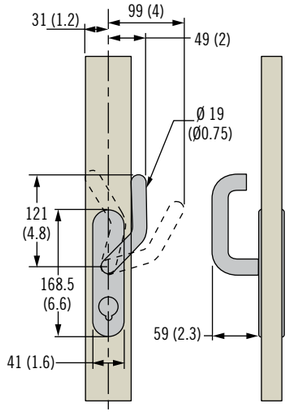

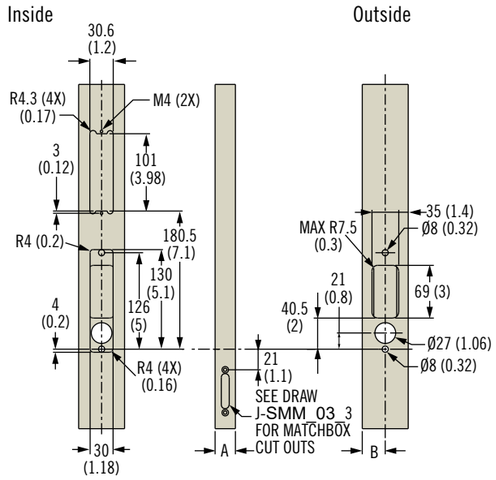

Latch Module Options

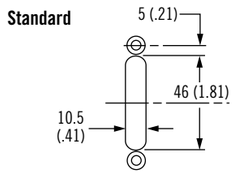

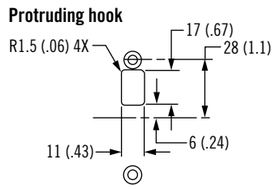

Slider Part Numbers - Flush inside version			
Latch Module Locking Mechanism	**Door Thickness (A)**		
	23 (.9) - 28.5 (1.12)	28.5 (1.12) - 33.5 (1.32)	33.5 (1.32) - 38 (1.50)
Standard. Star Slider chrome. Offset handle and flushed inside handle.	SMM_03_131_**XX**_10	SMM_03_132_**XX**_10	SMM_03_133_**XX**_10
Star Slider chrome. Offset handle and flushed inside handle. Protruding hook.	SMM_ 03-331_**XX**_10	SMM_03_332_**XX**_10	SMM_03_333_**XX**_10

XX = 15 for port closing door
XX = 16 for starboard closing door

Star Slider Accessories	
Mounting tool for striker	SMM_90_103_41
Top Stop	SMM_7521
Ramp for top stop	SMM_90_201_60

Dimensions in millimeters (inch) unless otherwise stated

SMM Talon Entry Door Lock without Key lock Top Stop Installation

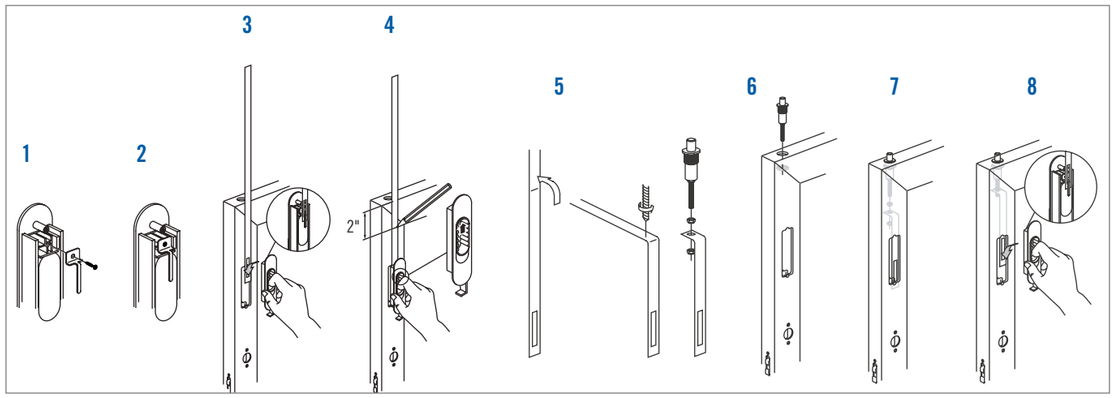

Panel Preparation

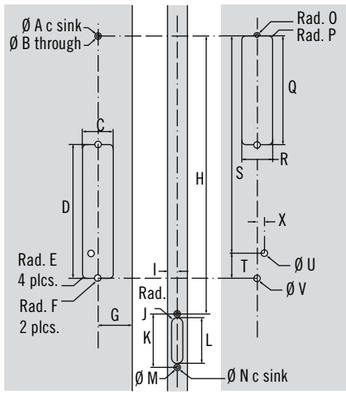

U = (Option for egress opening)

		Imperial		Metric
		Nominal	Decimal	
A		5/16	.311	7.9
B		5/32	.156	4
C		1 3/16	1.187	30.2
D		6 5/32	6.142	156
E		5/32	.156	4
F		5/32	.156	4
G	min.	53/64	.827	21
	max.	1 33/64	1.516	38.5
H		11 7/16	11.437	290.5
I	min.	11/32	.354	9
	max.	19/32	.591	15
J		7/32	.211	5.5
K		2 7/32	2.205	56
L	min.	1 3/4	1.77	45
	max.	1 13/16	1.81	46
M		5/32	.156	4
N		5/16	.311	7.9
O		5/32	.156	4
P		5/32	.156	4
Q		4 7/32	4.213	107
R		1 3/16	1.187	30.2
S		9 25/64	9.39	238.5
T		31/32	.965	24.5
U		1/4	.25	6.35
V		1/4	.25	6.35
X		9/32	.276	7

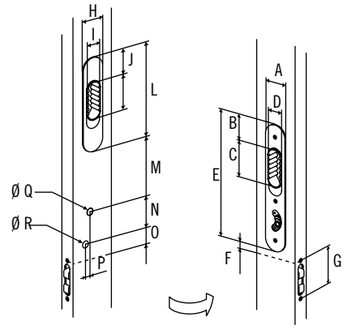

	Imperial		Metric
	Nominal	Decimal	
A	1 13/32	1.41	36
B	1 1/2	1.49	38
C	2 3/16	2.18	55.5
D	3/4	.75	19
E	7 9/16	7.56	192
F	3/8	.374	9.5
G	2 7/32	2.224	56.5
H	1 13/32	1.41	36
I	3/4	.75	19
J	1 1/2	1.49	38
K	2 3/16	2.18	55.5
L	5 5/8	5.63	143
M	3 7/16	3.445	87.5
N	15/16	.945	24
O	1 1/32	1.024	26
P	9/32	.276	7
Q	1/4	.250	6.35
R	1/4	.250	6.35

Without Key-lock Installation

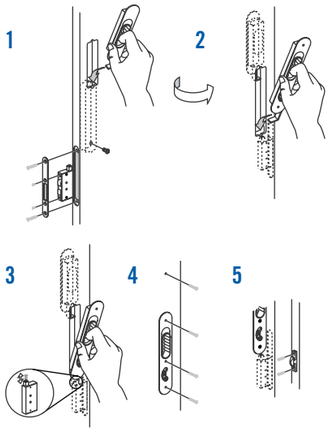

SMM Talon Entry Door Lock, Key Locking

Panel Preparation

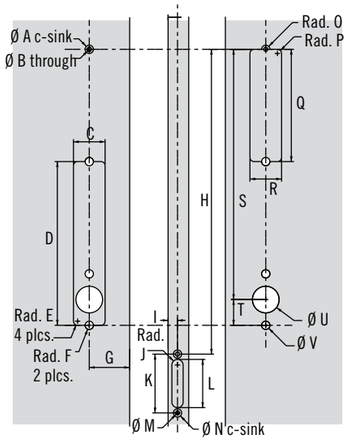

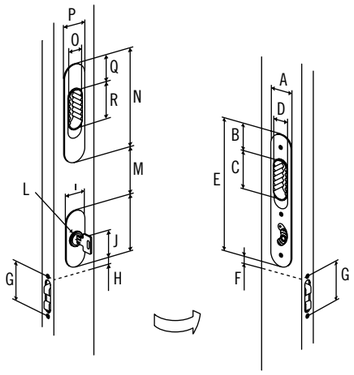

	Imperial		Metric
	Nominal	Decimal	
A	1 13/32	1.41	36
B	1 1/2	1.49	38
C	2 3/16	2.18	55.5
D	3/4	.75	19
E	7 9/16	7.56	192
F	3/8	.374	9.5
G	2 7/32	2.224	56.5
H	3/8	.374	9.5
I	1 19/64	1.299	33
J	1 41/64	1.634	41.5
K	3 7/32	3.228	82
L	7/8	.87	22
M	2 55/64	2.85	72.5
N	5 5/8	5.63	143
O	3/4	.75	19
P	1 13/32	1.41	36
Q	1 1/2	1.49	38
R	2 3/16	2.18	55.5

		Imperial		Metric
		Nominal	Decimal	
A		5/16	.311	7.9
B		5/32	.156	4
C		1 3/16	1.187	30.2
D		6 5/32	6.142	156
E		5/32	.156	4
F		5/32	.156	4
G	min.	53/64	.827	21
	max	1 33/64	1.516	38.5
H		11 7/16	11.437	290.5
I	min.	11/32	.354	9
	max	19/32	.591	15
J		7/32	.211	5.5
K		2 7/32	2.205	56
L	min.	1 3/4	1.77	45
	max	11 3/16	1.81	46
M		5/32	.156	4
N		5/16	.311	7.9
O		5/32	.156	4
P		5/32	.156	4
Q		4 7/32	4.213	107
R		1 3/16	1.187	30.2
S		9 25/64	9.39	238.5
T		31/32	.965	24.5
U		1	1	25.4
V		5/16	.314	8

Key-locking Installation

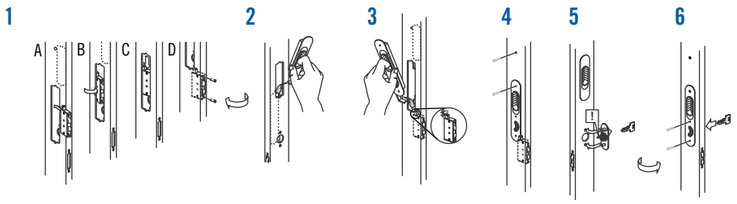

SMP Polar - Push to Close latch

- Suitable for applications with soft-close-drawer runners
- Sleek style and design provides a clean look
- Simple operation for interior applications only

Material and Finish:

Drawer cup: ABS, Handle: PC/ABS, see part number table for finish
Latch housing: Nylon black
Keeper body & rocker arm: Glass filled nylon black
Latching Pin: Die cast zinc chrome plated
Springs: 302 stainless steel passivated
Magnets: Neodymium iron boron nickel plated
Screws (4 supplied): Stainless steel black

Performance Detail:

Max. static load: 545 N (122 lbs)

Operation

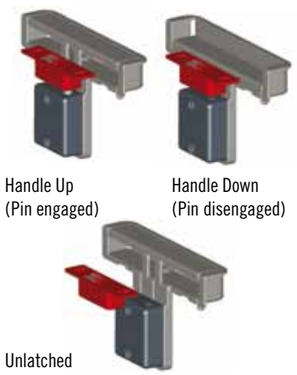

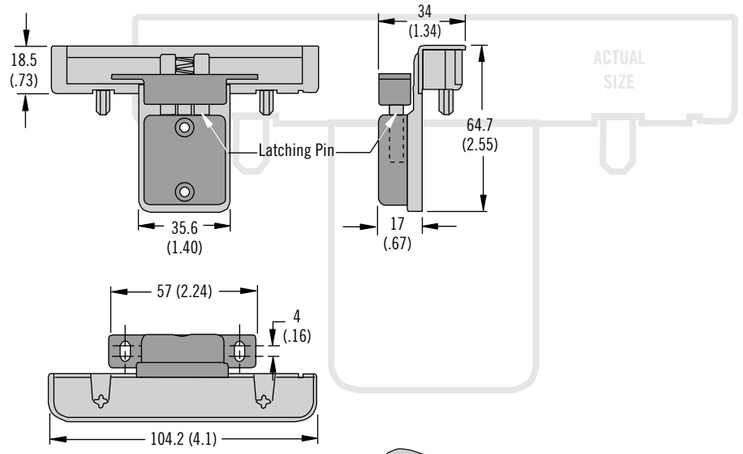

Panel Preparation

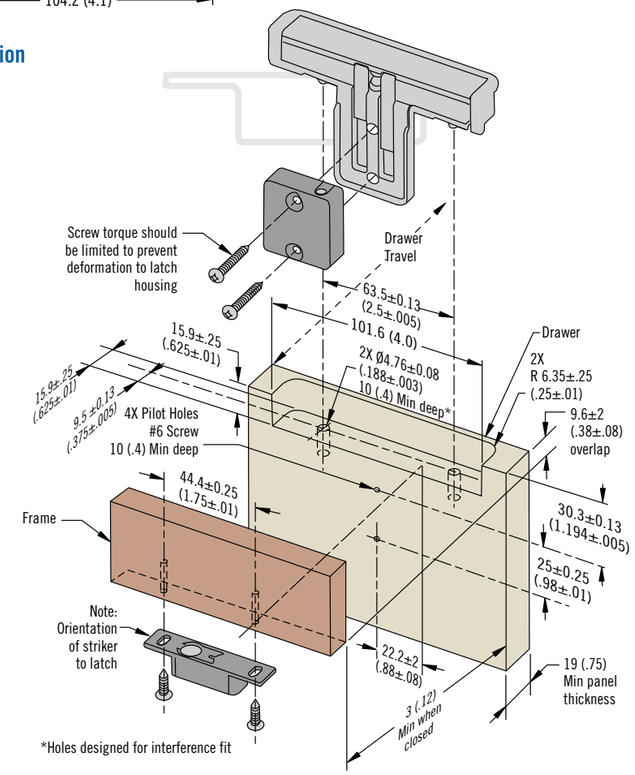

SMP _04_33_ F

F Finish

11	Polished chrome	**44**	Polished brass
22	Satin chrome	**55**	Black