# WEH® Breathing Air Connectors

## for breathing air filling and SCBA testing

ORIGINAL WEH® QUALITY since 1973

50+ YEARS Quality & Safety

WEH® - We Engineer Hightech

**To the current catalog version:**

© All rights reserved, WEH GmbH Verbindungstechnik.
Any unauthorized copying, distribution, or other use of the copyrighted content is prohibited without the written consent of WEH GmbH Verbindungstechnik.
With the transmission of a more recent version of this document, all older versions lose their validity. The most recent version of the document applies. This can be found at www.weh.com/downloads.
Unless expressly agreed otherwise, our General Terms and Conditions and the Know-How Protection and Quality Assurance Agreement (www.weh.com) apply to all deliveries and other services.
We do not recognize the customer‘s general terms and conditions.

WEH® is a registered trademark of WEH GmbH Verbindungstechnik.

# » Table of contents


1 | Breathing air products ..... 4

1.1 | Overview ..... 4

2 | CLICKMATE® TW154 | Upgrading existing filling rigs ..... 6

2.1 | General ..... 6

2.2 | Ordering ..... 8

3 | CLICKMATE® TW154 | Direct connection to hose filling systems ..... 10

3.1 | General ..... 10

3.2 | Ordering ..... 12

4 | CLICKMATE® Versions ..... 14

4.1 | Overview ..... 14

5 | WEH® Connector TW156 | For respiratory protective equipment ..... 16

5.1 | General ..... 16

5.2 | Ordering ..... 18

6 | Further information ..... 20

6.1 | Technical appendix ..... 20

6.2 | Brochure data ..... 23

# » WEH® Connectors for breathing air

## SETTING NEW STANDARDS FOR BA FILLING

Since 1980 WEH has offered an innovative range of quick connectors for pressure and function testing that achieves a connection in seconds. Included in the vast product range are WEH® Connectors for filling BA cylinders and for testing respiratory protective equipment.
Satisfied customers range from manufacturers of filling rigs and fire brigades.

## CLICKMATE® FOR CONVERSION OF EXISTING FILLING RIGS AND UPGRADING HOSE FILLING SYSTEMS

Breathing air (BA) cylinders can now be filled quickly and easily using WEH® Conversion kits fitted to existing installations.

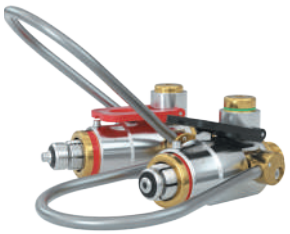

The **CLICK**MATE® TW154 grips directly into the thread of the cylinder valve thus eliminating strenuous hand tightening. A pressure assisted sealing piston provides a leak tight seal.
The quick connection to the thread is achieved by moving an actuating loop through 90° which simultaneously engages the valve threads, sealing piston and a safety mechanism that prevents disconnection under pressure.

The WEH® Conversion kits are designed for upgrading existing filling rigs. Both 200 bar and 300 bar versions are available. The quick connectors are also available for upgrading hose filling systems.

## FASTER TESTING OF RESPIRATORY PROTECTIVE EQUIPMENT WITH THE TW156 QUICK CONNECTOR

SCBAs used by fire brigades must be regularly subjected to a functional test.
To automate this testing procedure, WEH has added the TW156 quick connector to its product range of BA products.
The lever actuated TW156 connects in seconds to the manual inlet valve of the respiratory protective device eliminating repetitive turning. By simply actuating the hand lever and placing the connector onto the inlet valve, then releasing the hand lever, the pressure medium can be applied.
To disconnect, simply actuate the hand lever and remove the TW156.
The TW156 quick connector is designed to suit BA sets with a max. operating pressure of 375 bar. The quick connector can either be connected directly to the existing test device or connected by a hose to the test device. When used with a hose, the connector must be secured when not in use.
TW156 is available with manual or pneumatic actuation.

## ILLUSTRATIONS

Existing BA cylinder filling rig after it has been upgraded to using the **CLICK**MATE® TW154

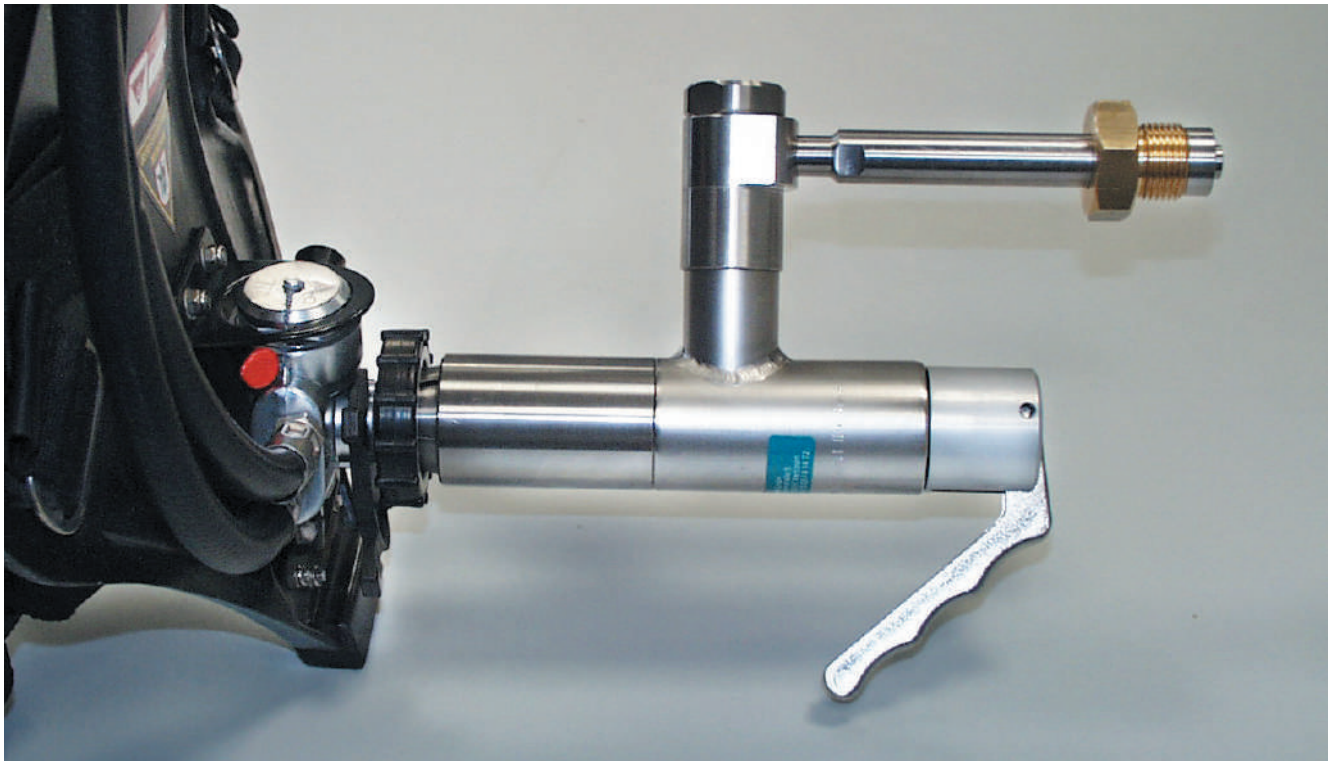

Testing of respiratory equipment with TW156 quick connector

# » CLICKMATE® TW154 | Upgrading existing filling rigs

## DESCRIPTION

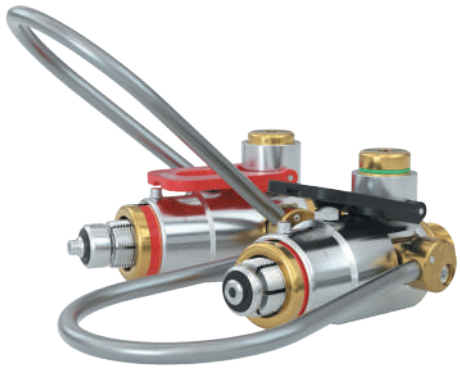

**Features**
- Connection directly to the standard threads of the cylinder valves
- Quick connection in seconds without hand tightening
- Filling of breathing air cylinders becomes even easier and more efficient
- Improves operational safety and ergonomics

**CLICK**MATE® TW154 quick connector is designed for filling breathing air cylinders. Existing filling rigs equipped with screw connectors can be upgraded without problems.
The **CLICK**MATE® TW154 uses the split collet thread design that locks securely into standard threads of cylinder valves. Connection is made by lowering the operating loop through 90° which locks the split collet jaws into the cylinder valve and actuates the sealing piston. An integrated safety mechanism prevents disconnection under pressure.

**CLICK**MATE® TW154 is available, among others, for breathing air cylinders with a nominal operating pressure of 200 bar resp. 300 bar. For differentiation, the connector for 200 bar is equipped with a black locking lever and the connector for 300 bar with a red locking lever.

The quick connector is equipped with a NBR front seal and inner seals of FKM. Other sealing materials are available on request. It is the customer's responsibility to clarify the media compatibility.

All connectors are subjected to extensive pressure and durability tests.

**Application**
Quick connector for filling of BA cylinders in fire brigade BA filling installations for direct connection to existing filling rigs that have balancers to equalize weight and height.

## TECHNICAL DATA

| Characteristics | Basic version | Options |
|---|---|---|
| Max. allowable operating pressure PS | 250 bar resp. 375 bar | On request |
| Temperature range | +5°C up to +70°C | On request |
| Medium | Breathing air (compressed air) | On request |
| Connection A (cylinder valve) | Standard connection for G5/8" female thread (DIN 477/ DIN EN ISO 12209) | Other connections acc. to the corresponding national standard available. Special connections available. |
| Inlet B1 | Depending on connection at the filling rig | On request |
| Material | Brass and corrosion-resistant stainless steel | On request |
| Sealing material | Front seal: NBR<br>Inner seals: FKM | |

## SYSTEM OVERVIEW

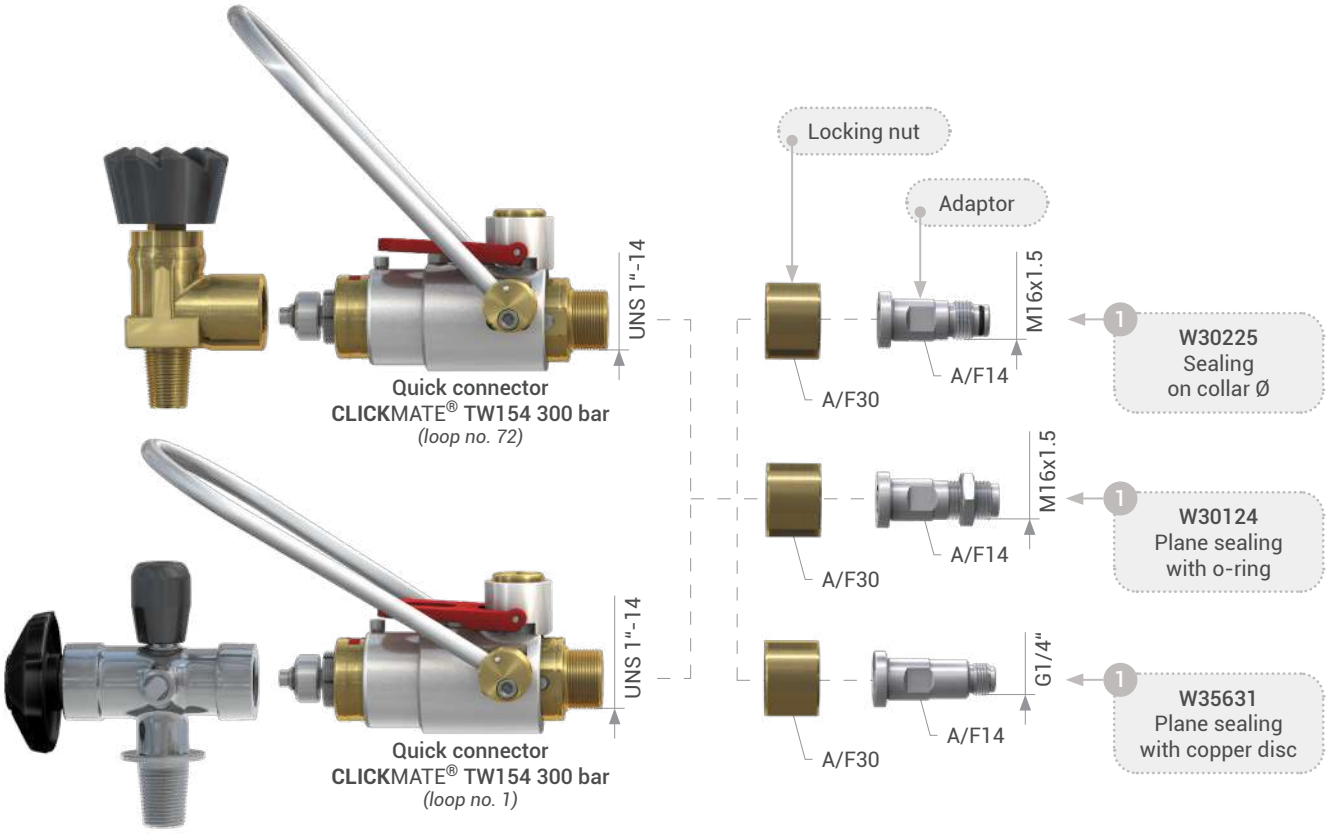

Filling rig with **CLICK**MATE® **TW154 Connectors**

# » CLICKMATE® TW154 | Upgrading existing filling rigs

## ORDERING | Quick connector CLICKMATE® TW154 with operating loop no. 72

approx. dimensions (mm)

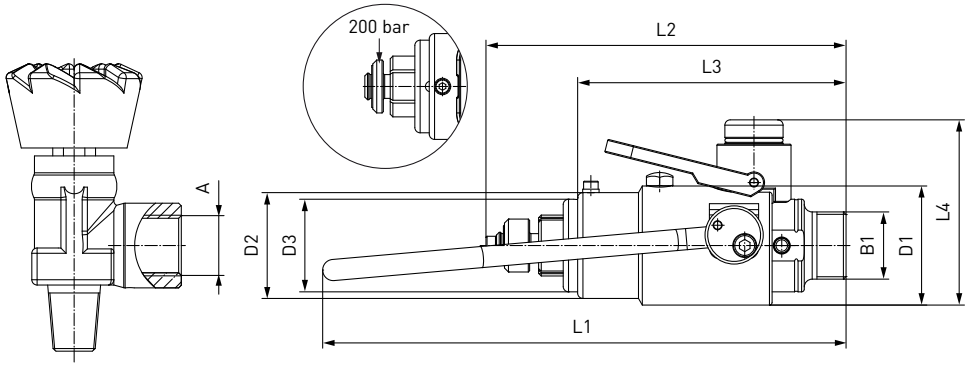


| Part no. | Description | Pressure (PS) | A (female thread) | B1 (male thread) | L1 | L2 | L3 | L4 | D1 | D2 | D3 |
|---|---|---|---|---|---|---|---|---|---|---|---|
| C1-92774-X01 | CLICKMATE® TW154 | 250 bar | G5/8"* | UNS 1"-14 | 198 | 126 | 102 | 70 | 45 | 40 | 35 |
| C1-92775-X01 | CLICKMATE® TW154 | 375 bar | G5/8"* | UNS 1"-14 | 198 | 136 | 102 | 70 | 45 | 40 | 35 |

* acc. to DIN 477/ DIN EN ISO 12209

## ORDERING | Quick connector CLICKMATE® TW154 with operating loop no. 1 (suitable for Interspiro)

approx. dimensions (mm)

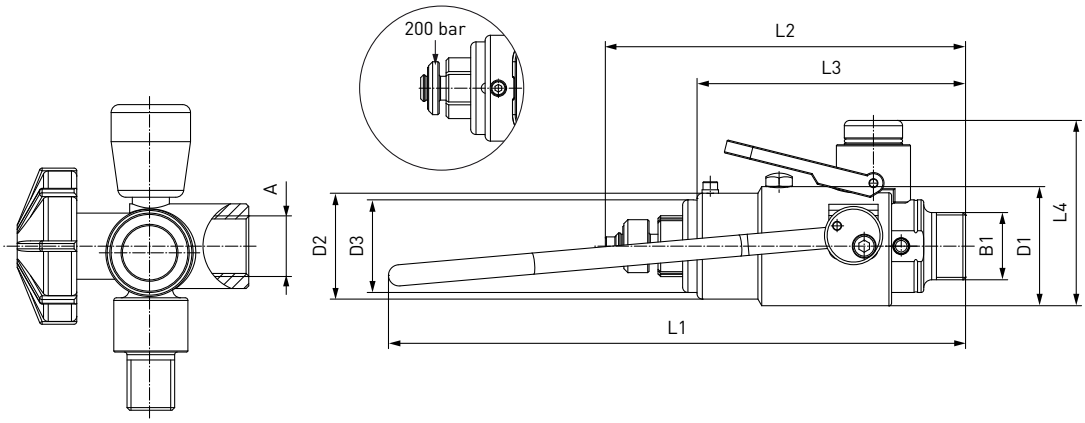


| Part no. | Description | Pressure (PS) | A (female thread) | B1 (male thread) | L1 | L2 | L3 | L4 | D1 | D2 | D3 |
|---|---|---|---|---|---|---|---|---|---|---|---|
| C1-109695-X01 | CLICKMATE® TW154 | 250 bar | G5/8"* | UNS 1"-14 | 198 | 126 | 102 | 70 | 45 | 40 | 35 |
| C1-109696-X01 | CLICKMATE® TW154 | 375 bar | G5/8"* | UNS 1"-14 | 198 | 136 | 102 | 70 | 45 | 40 | 35 |

* acc. to DIN 477/ DIN EN ISO 12209

## ACCESSORIES

The following accessories are available for the **CLICK**MATE® TW154:

### 1 Adaptors incl. locking nut

Adaptor for **CLICK**MATE® TW154 for connection to the filling rig.

| Part no. | Description | Pressure (PS) | Connection |
|---|---|---|---|
| W30225 | For connection to the filling rig | 375 bar | M16x1.5 male thread<br>o-ring sealing<br>on collar Ø 12.9 mm |
| W30124 | For connection to the filling rig | 375 bar | M16x1.5 male thread<br>o-ring plane sealing |
| W35631 | For connection to the filling rig | 375 bar | G1/4" male thread<br>plane sealing |

### 2 Weight and height balancing system TZ100

For safe positioning of the cylinders below the filling rig.
**Note**: Please note that a minimum space of 180 mm from connector centre to connector centre has to be observed at the filling rig!

| Part no. | Description | Filling height |
|---|---|---|
| C1-66042 | TZ100 System 1 | 825 - 870 mm |
| C1-66237 | TZ100 System 2 | 840 - 910 mm |
| C1-66238 | TZ100 System 3 | 880 - 980 mm |
| C1-66239 | TZ100 System 4 | 955 - 1055 mm |

## SPARE PARTS

Various parts are available as spares for the **CLICK**MATE® TW154.

| Part no. | Description |
|---|---|
| E51-308S508 | Spare front seal for **CLICK**MATE® TW154 |

# » CLICKMATE® TW154 | Direct connection to hose filling systems

## DESCRIPTION

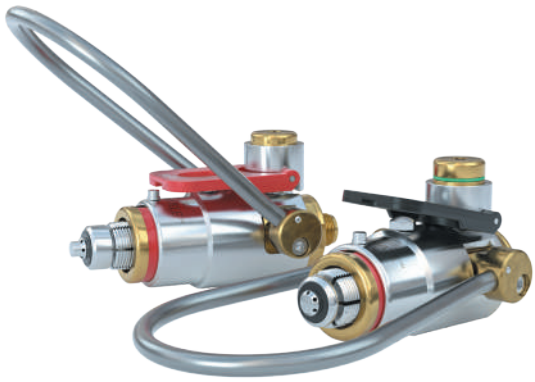

**Features**
- Connection directly to the standard threads of the cylinder valves
- Quick connection in seconds without hand tightening
- Filling of breathing air cylinders becomes even easier and more efficient
- Improves operational safety and ergonomics

**CLICK**MATE® TW154 quick connector is designed for filling respiratory air cylinders. Existing connectors for hose filling can be upgraded without problems.
The **CLICK**MATE® TW154 uses the split collet thread design that locks securely into standard threads of cylinder valves. Connection is made by lowering the operating loop through 90° which locks the split collet jaws into the cylinder valve and actuates the sealing piston. An integrated safety mechanism prevents disconnection under pressure.

**CLICK**MATE® TW154 is available, among others, for breathing air cylinders with a nominal operating pressure of 200 bar resp. 300 bar. For differentiation, the connector for 200 bar is equipped with a black locking lever and the connector for 300 bar with a red locking lever.

The quick connector is equipped with a NBR front seal and inner seals of FKM. Other sealing materials are available on request. It is the customer's responsibility to clarify the media compatibility.

All connectors are subjected to extensive pressure and durability tests.

**Application**
Quick connector for filling of BA cylinders in fire brigade BA filling installations for direct connection to hose filling systems.

## TECHNICAL DATA

| Characteristics | Basic version | Options |
|---|---|---|
| Max. allowable operating pressure PS | 250 bar resp. 375 bar | On request |
| Temperature range | +5°C up to +70°C | On request |
| Medium | Breathing air (compressed air) | On request |
| Connection A (cylinder valve) | Standard connection for G5/8" female thread (DIN 477/ DIN EN ISO 12209) | Other connections acc. to the corresponding national standard available. Special connections available. |
| Inlet B1 | Depending on connection at the filling hose | On request |
| Material | Brass and corrosion-resistant stainless steel | On request |
| Sealing material | Front seal: NBR<br>Inner seals: FKM | |

# » CLICKMATE® TW154 | Direct connection to hose filling systems

## SYSTEM OVERVIEW

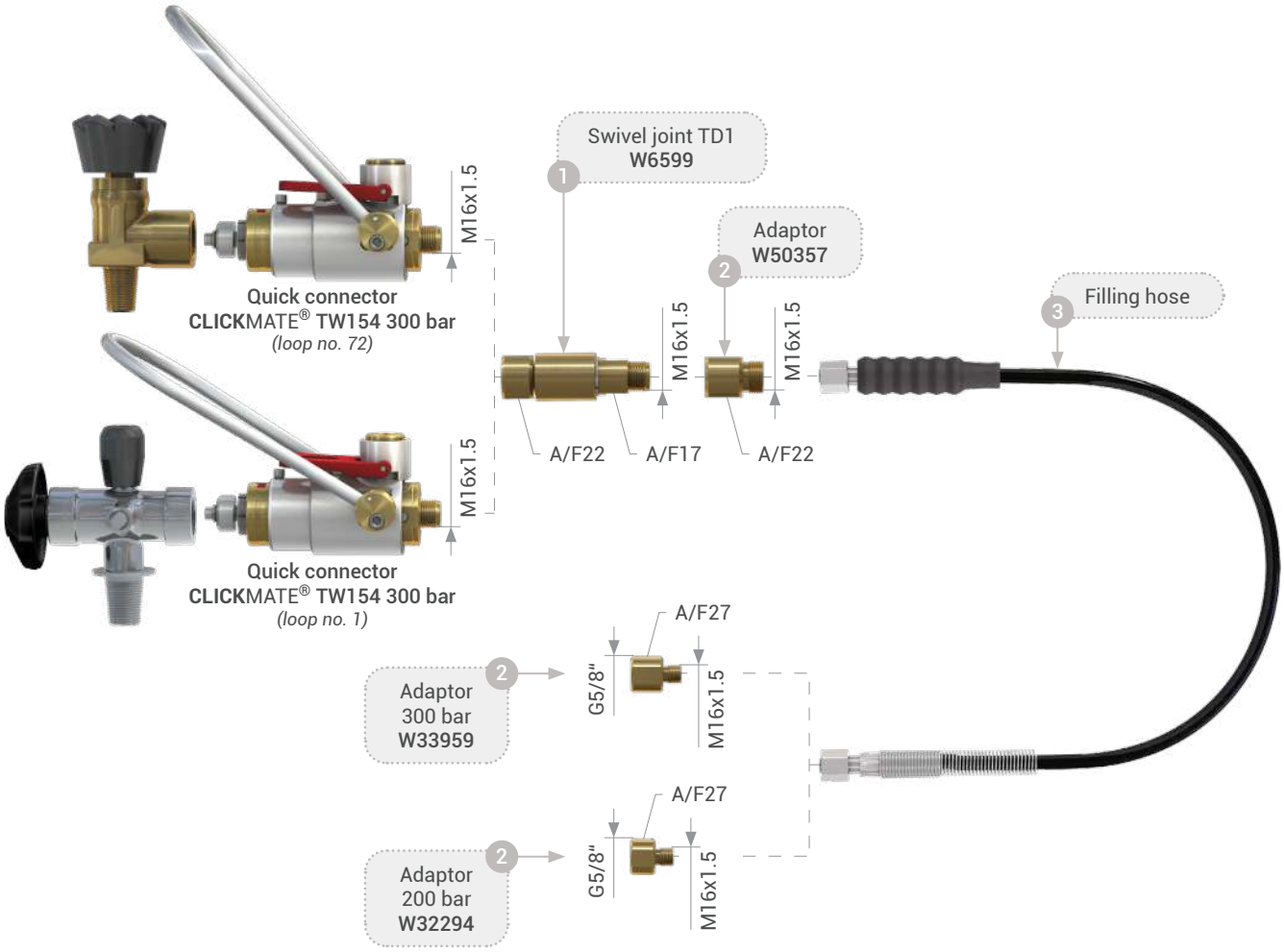


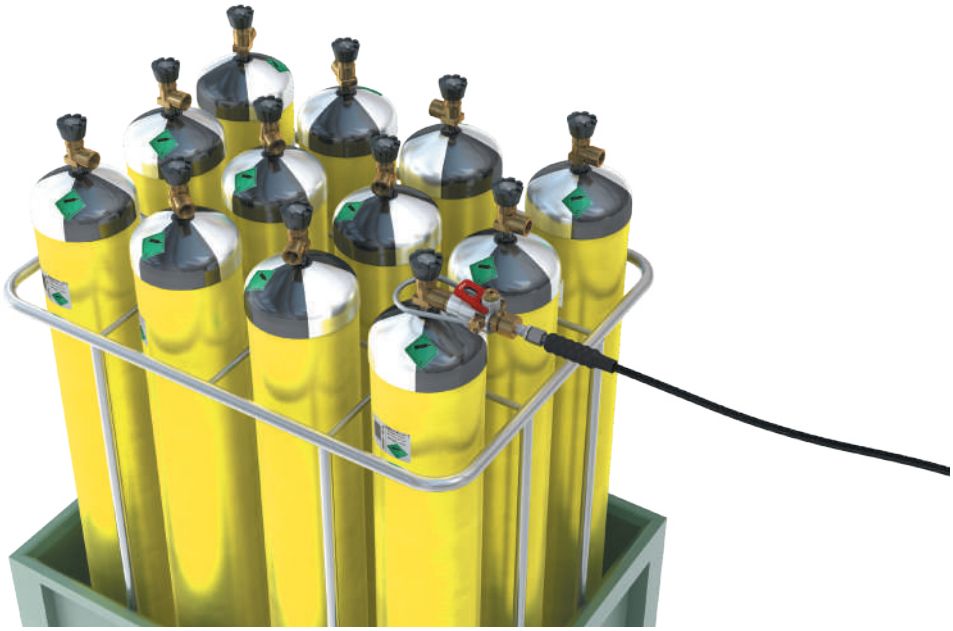

Hose filling system with CLICKMATE® TW154

# » CLICKMATE® TW154 | Direct connection to hose filling systems

## ORDERING | Quick connector CLICKMATE® TW154 with operating loop no. 72

approx. dimensions (mm)

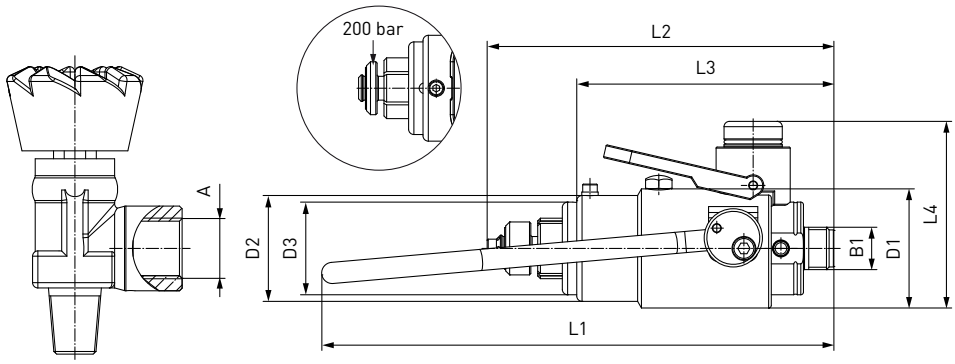


| Part no. | Description | Pressure (PS) | A (female thread) | B1 (male thread) | L1 | L2 | L3 | L4 | D1 | D2 | D3 |
|---|---|---|---|---|---|---|---|---|---|---|---|
| C1-92776-X01 | CLICKMATE® TW154 | 250 bar | G5/8"* | M16x1.5 | 194 | 122 | 97 | 70 | 45 | 40 | 35 |
| C1-92777-X01 | CLICKMATE® TW154 | 375 bar | G5/8"* | M16x1.5 | 194 | 131 | 97 | 70 | 45 | 40 | 35 |

* acc. to DIN 477/ DIN EN ISO 12209

## ORDERING | Quick connector CLICKMATE® TW154 with operating loop no. 1 (suitable for Interspiro)

approx. dimensions (mm)

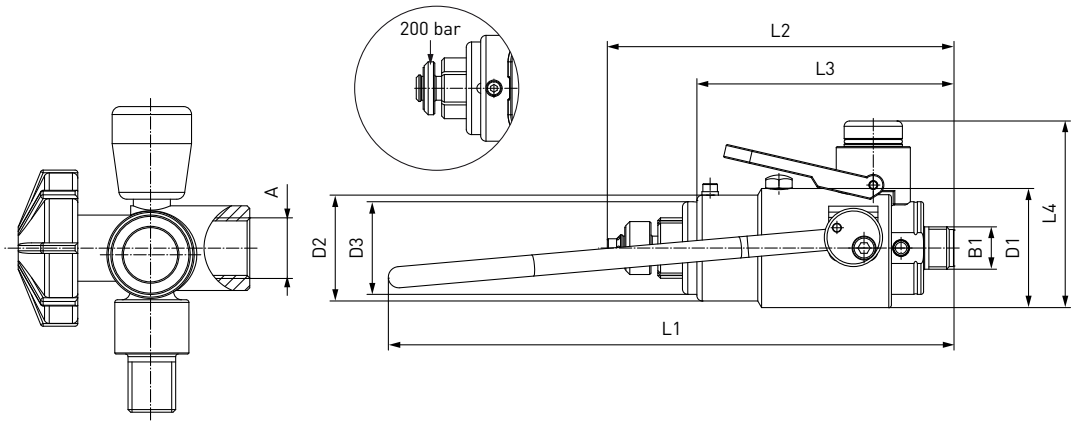


| Part no. | Description | Pressure (PS) | A (female thread) | B1 (male thread) | L1 | L2 | L3 | L4 | D1 | D2 | D3 |
|---|---|---|---|---|---|---|---|---|---|---|---|
| C1-109697-X01 | CLICKMATE® TW154 | 250 bar | G5/8"* | M16x1.5 | 214 | 122 | 97 | 70 | 45 | 40 | 35 |
| C1-109698-X01 | CLICKMATE® TW154 | 375 bar | G5/8"* | M16x1.5 | 214 | 131 | 97 | 70 | 45 | 40 | 35 |

* acc. to DIN 477/ DIN EN ISO 12209

## ACCESSORIES

The following accessories are available for the **CLICK**MATE® TW154:

### 1 Swivel joint TD1

The swivel joint TD1 prevents twisting of the hose and enables the axial aligning of the connector.

| Part no. | Description | Pressure (PS) | Connection |
|---|---|---|---|
| W6599-X01 | Swivel joint TD1 | 400 bar | M16x1.5 male thread |
| B200B-049-00 | Seal set for TD1 | - | - |

### 2 Adaptors

Adaptor for connection to the filling hose resp. for connection of the filling hose with the filling rig.

| Part no. | Description | Pressure (PS) | Connection |
|---|---|---|---|
| W50357 | For connection to the filling hose | 375 bar | M16x1.5 male thread<br>o-ring with 60° inner cone |
| W32294 | For connection filling hose / filling rig<br>(for PN = 200 bar) | 375 bar | G5/8" female thread<br>*DIN EN ISO 12209* |
| W33959 | For connection filling hose / filling rig<br>(for PN = 300 bar) | 375 bar | G5/8" female thread<br>*DIN EN ISO 12209* |

### 3 Filling hose

| Part no. | Description | Pressure (PS) | Connection |
|---|---|---|---|
| E68-32040 | Filling hose<br>length 1.5 m / nominal bore DN 5 mm<br>(incl. TÜV approval) | 425 bar | M16x1.5 female thread |

Other hose lengths on request

## SPARE PARTS

Various parts are available as spares for the **CLICK**MATE® TW154.

| Part no. | Description |
|---|---|
| E51-308S508 | Spare front seal for **CLICK**MATE® TW154 |

# » CLICKMATE® | Versions

Of course there are many other versions of our **CLICK**MATE® Quick connectors available, e.g. with operating lever, bleeding valve or check valve, for twin cylinder packs etc.
And WEH also offers quick connectors for other standards, for example the CGA standard.
That's only a small variety of special connectors. Please do not hesitate to contact us for other versions!

## CLICKMATE® TW154 WITH BLEEDING VALVE FOR FEMALE THREADS

- Standard connection for G5/8" female thread *(DIN 477/ DIN EN ISO 12209)*
- Inlet B1: UNF 7/16"-20 male thread (adaptor)
- Max. allowable operating pressure PS: 375 bar
- Lateral operating lever
- Integrated bleeding valve
- Integrated adaptor at inlet B1
- Other designs on request

## CLICKMATE® TW154 WITH BLEEDING AND CHECK VALVE FOR FEMALE THREADS

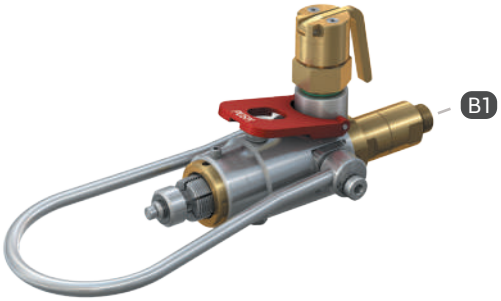


- Standard connection for G5/8" female thread *(DIN 477/ DIN EN ISO 12209)*
- Inlet B1: M16x1.5 male thread (check valve)
- Max. allowable operating pressure PS: 375 bar
- Operating loop
- Integrated bleeding valve
- Integrated check valve at inlet B1
- Other designs on request

## CLICKMATE® TW154 FOR FILLING TWIN CYLINDER PACKS

- Sandard connection for G5/8" female thread *(DIN 477/ DIN EN ISO 12209)*
- Inlet B1: G1/4" male thread with 60° inner cone (adaptor)
- Max. allowable operating pressure PS: 375 bar
- Lateral operating lever
- Integrated swivel joint TD1 at inlet B1
- Incl. adaptor
- Other designs on request

## APPLICATION EXAMPLE

Filling breathing air cylinders with WEH® connector TW154.

# » WEH® Connector TW156 | For respiratory protective equipment

## DESCRIPTION

**Features**
- Quick connection in seconds without hand tightening
- Robust design
- Easy connection means no straining of muscles, joints, etc.
- Improves operational safety and ergonomics

Respiratory protective equipment, such as SCBAs, must be regularly subjected to a functional test. WEH has developed the TW156 quick connector to automate this testing procedure. In seconds and without any laborious screwing the TW156 connects pressure-tight to the handwheel of the respiratory protective device. The clamping jaws grip onto the thread and the pressure-tight connection is made. The quick connector can either be connected directly to the existing test device or connected by a hose to the test device. When used with a hose, the connector must be secured when not in use.
All common test stations can be retrofitted without any problems.
The quick connector improves occupational safety and ergonomics and facilitates the testing of respiratory protective equipment.

The TW156 quick connector is available with manual or pneumatic actuation and has a red ring as a visual check to indicate if the quick connector is properly connected.

The WEH® TW156 is equipped with inner seals of NBR. Other sealing materials are available on request. It is the customer's responsibility to clarify the media compatibility.

**Application**
Quick connector for testing respiratory protective equipment.

## TECHNICAL DATA

| Characteristics | Basic version | Options |
|---|---|---|
| Max. allowable operating pressure PS | 375 bar | On request |
| Pilot pressure | 6 - 12 bar compressed air | On request |
| Temperature range | +5°C up to +80°C | On request |
| Medium | Breathing air (compressed air) | On request |
| Connection A (respiratory protective equipment) | Standard connection for G5/8" male thread | On request |
| Pilot pressure port P1 | G1/8" female thread | On request |
| Actuation | H = manual actuation of the lever<br>V = actuation via pneumatic / manual finger pressure valve | On request:<br>P = pneumatic actuation for automated applications and activations |
| Material | Corrosion-resistant stainless steel<br>Extensions: chromed / brass | On request |
| Sealing material | NBR | |

Other designs on request

## SYSTEM OVERVIEW

For the WEH® TW156 Quick connector various actuations and lateral extensions are available. The following schematic diagram shows an overview of these versions.

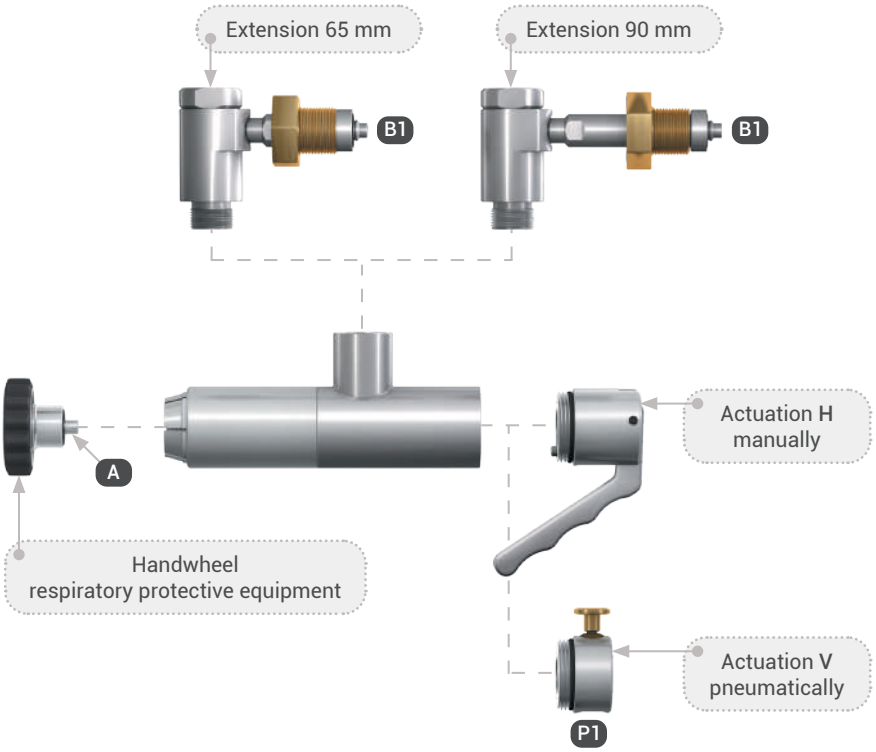


Port definition

| | |
|---|---|
| A | Connection respiratory protective equipment |
| B1 | Media inlet |
| P1 | Pilot pressure line (actuation V) |

# » WEH® Connector TW156 | For respiratory protective equipment

## ORDERING | Quick connector TW156 with extension for SCBAs with carrying system

approx. dimensions (mm)

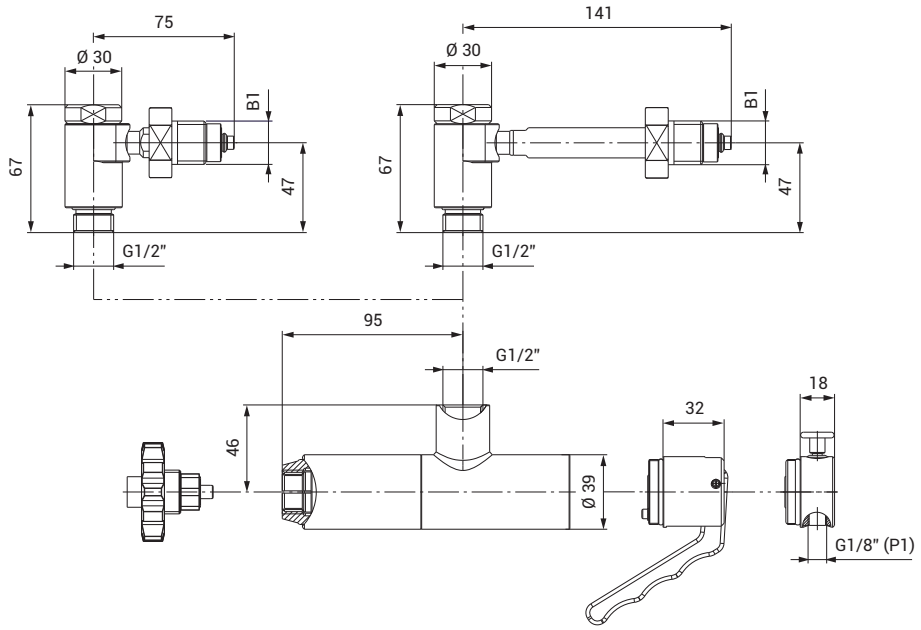


| Part no. | Description | Pressure (PS) | Actuation | B1 (male thread) |
|---|---|---|---|---|
| C1-55640* | Elbow extension 90 mm | 375 bar | Manually H | G5/8" |
| C1-35615** | Elbow extension 65 mm | 375 bar | Manually H | G5/8" |
| C1-67670** | Elbow extension 65 mm | 375 bar | Pneumatically V | G5/8" |

* suitable for MSA (Multi-/Proficheck), Dräger (Quaestor 5000/7000)
** suitable for Dräger (Quaestor III/automatic), Labtec

Other versions (e.g. elbow extension 130 mm) on request.

## APPLICATION EXAMPLE

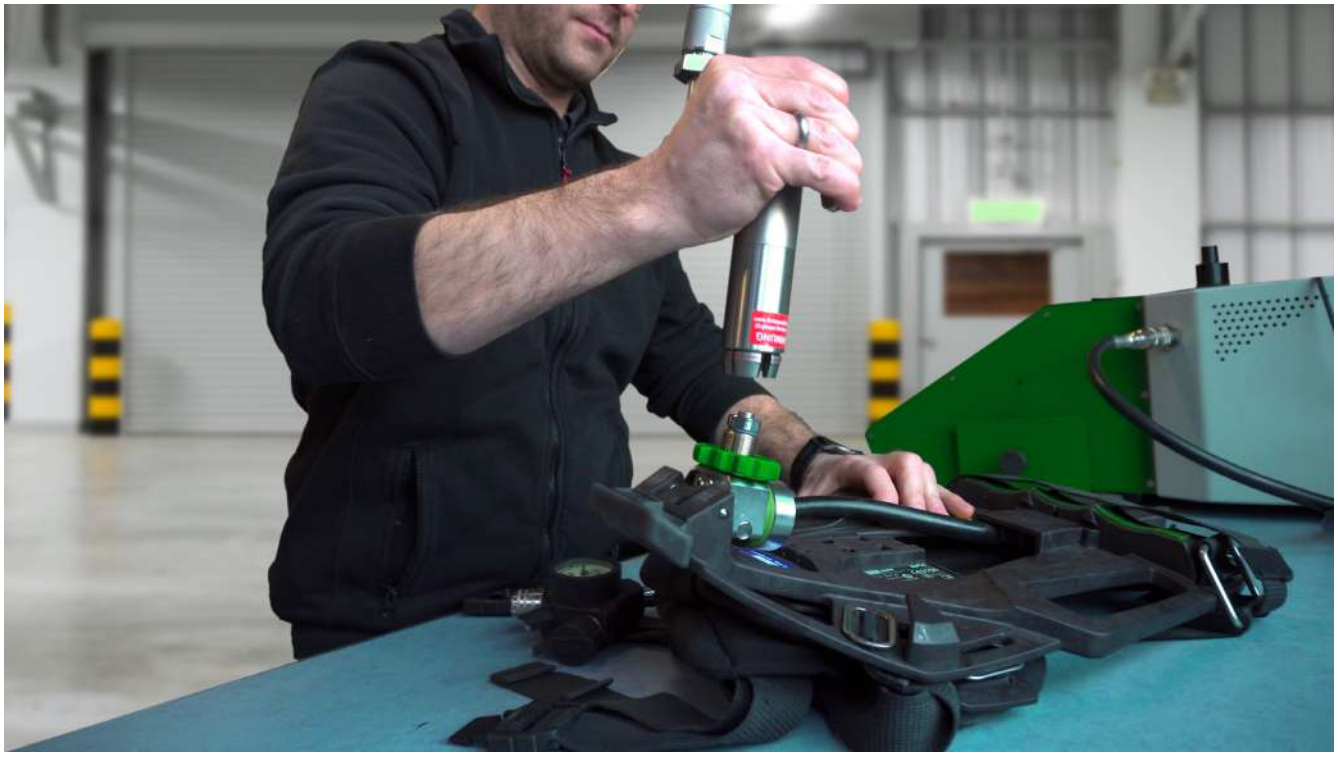

Testing respiratory protective equipment with WEH® connector TW156.

# Technical appendix

## Definitions

| Abbreviation | Definition | |
|---|---|---|
| **Pressure specifications** | *(all pressure specifications are to be understood as overpressure, unless otherwise stated)* | |
| PN | Nominal pressure | Nominal pressure after temperature compensation at 15 °C (59 °F) |
| PS | Max. allowable operating pressure | Maximum allowable operating pressure acc. to Pressure Equipment Directive 2014/68/EU, Article 2 paragraph 8 |
| PT | Hydrostatic test pressure | Hydrostatic test pressure acc. to Pressure Equipment Directive 2014/68/EU, Annex I no. 7.4 |
| PP | Pilot pessure | Actuation pressure for hydraulic and pneumatic components |
| PC | Cracking pressure | Pressure at which the check valve opens and the first indication of flow occurs |
| WP | Working pressure | 'Working pressure' means the maximum pressure to which a component is designed to be subjected to and which is the basis for determining the strength of the component under consideration |
| MAWP | Max. allowable working pressure | Max. allowable operating pressure at which the weakest point of the system or the vessel (e.g. cylinder valve) can operate at a certain temperature during normal operation |
| **Dimensions** | | |
| L1, L2, L3 ... | Length specification | |
| D1, D2, D3 ... | Diameter specification | |
| A/F(1), A/F(2) ... | Wrench size specification | |
| **Ports** | | |
| A / X | Customer-specific port (test piece, sample, cylinder valve, handwheel respiratory protective equipment) | |
| B1, B2, B3 ... | Media ports | |
| C1, C2, C3 ... | Gas recirculation ports | |
| P1, P2, P3 ... | Pilot pressure ports | |
| MA1, MA2 ... | Measuring ports | |
| Q | Drain port filter | |
| G | Mounting bores | |
| **Others** | | |
| DN | PED-nominal size (DN) | Nominal size (DN) acc. to Pressure Equipment Directive 2014/68/EU, whereby the largest, pressurized diameter of the media or pilot pressure connections of the WEH Device (A, B1, B2, B3 or C1, C2, C3 and P1, P2, P3) which faces the customer´s pipe system, is relevant. Expressed by a rounded, dimensionless number, e. g. DN 25 |
| TNW | Technical nominal size | The technical nominal size (formerly expressed by "effective diameter") is the smallest diameter available for the media flow of the respective pressure device. Expressed by a number with unit, e. g. 12 mm |
| µm | Max. diameter of the filtered particle | |
| Kv | Is the discharge of water in $m^3/h$ at a pressure drop of 1 bar (14.5 psi), acc. to DIN/EN 60534-2 | |
| Cv | Is the discharge of water in gallons per minute at a pressure drop of 1 psi, acc. to DIN/EN 60534-2 | |
| IR | Infrared data interface | |
| ENR | Exchangeable data interface (exchangeable nozzle receiver) | |

# » Technical appendix

## Definitions

| Abbreviation | Definition |
|---|---|
| TS | Maximum allowable temperature acc. to Pressure Equipment Directive 2014/68/EU, Article 2 paragraph 9 |
| Breakaway force | Is the force range, in which the breakaway releases |
| NC | Normally closed (initial position of shut-off valve) |
| NO | Normally open (initial position of shut-off valve) |

## Technical explanations

| Term | Definition |
|---|---|
| Temperature range | Is the temperature range in which the WEH® Product can be used.<br>If no explicit information on medium and ambient temperature is given, this temperature range applies to both medium and environment. |
| Media temperature range | Is the temperature range of the medium used, which can flow through the WEH® Product (may change depending on the time of measurement). |
| Ambient temperature range | Is the temperature range of the environment in which the WEH® Product can be used. |
| Leak rate | Is the maximum external leak rate, which the WEH® Product exhibits in delivery condition. |
| Internal leak rate | The internal leak rate depends, among other things, on type of application, medium and pressure difference on the WEH® Product. On request it can be specified more precisely. |
| Max. side load | Is the max. allowable sum of all external forces that may act on the device under intended use.<br>**Note:**<br>External forces can affect the life time of WEH® Products and can cause damage. Tensile and transverse loads as well as vibrations and pressure impacts need to be considered, e.g. by user side measures such as on site mountings and similar. Therefore, lateral forces such as whipping hoses or other equipment must be avoided. WEH® Products should be installed in such a way, that lateral forces which could lead to leakage or damage can not occur.<br>Special applications require a special consultation before selecting the product. |
| Products with pneumatic actuation | The customer has to ensure there is adequate axial movement when pneumatically actuated WEH® Products are used in automated systems, see maximum side load. Ideally the products should be mounted with a floating joint or introduced individually to prevent the possibly existing clamping jaws getting blocked or jammed in the thread of the test piece. |
| Sealing material | On request the WEH® Product can be adapted to customer specific applications regarding to the sealing materials used.<br>The clarification of the media compatibility and suitability of the adapted WEH® Product for the final application is always the responsibility of the end user. |
| Corrosion resistant | WEH® Products are designed for use in temperate climate zones - with low levels of humidity and salinity in the air. An accelerated formation of rust or corrosion may occur at or near the sea. Therefore, reduce the inspection interval recommended for normal use and send in the WEH® Product for maintenance immediately if you notice increased soot, rust or corrosion. |
| Storage / life time of components | There are certain requirements for every WEH® Product.<br>WEH® Products are generally products which may be subject to wear and fatigue during operation and depending on your individual application/use. For details - in particular regarding the corresponding minimum inspection and maintenance intervals – please refer to the respective operating instructions for the WEH® Product. |

# » Technical appendix

## Further explanations

| Subject | Definition |
|---|---|
| Technical data | Unless otherwise stated, the technical data in catalogs, data sheets and operating instructions are based on tests with nitrogen that are in the development phase or at the end of development. Leakage data are based on measurements with helium. |
| Intended use | The intended use of WEH® products can be found in the respective operating instructions. The following applications are generally excluded for all WEH® products, unless these are expressly permitted in the operating instructions:<br>• applications in the aerospace industry, e.g. for installation or use in or for the construction of aircraft, rocket propulsion systems, space probes, satellites, etc.<br>• shipping applications |
| Safe product selection | Our WEH® Products are designed to be operated by qualified professional users (insofar as WEH® Products are also designed to be operated by other users in individual cases, this is explicitly stated in the corresponding operating instructions). Please note that WEH does not know your system and therefore - also due to the large number of different potential applications of WEH® Products - cannot perform tests on all potential types of application. You alone are responsible for the selection, configuration and suitability of WEH® Products, especially according to the requirements of your system. Before purchasing WEH® Products, please particularly ensure that our products are compatible with your intended use, your performance data, your material and fluids, your system concept and your system limits according to our product specifications. Please also consider your technical and legal requirements for operation, handling and maintenance. The quality and safety of WEH® Products is our highest priority. For this reason, WEH® Products may not be used outside the specifications in the relevant data sheets and product descriptions. If you are not sure whether the WEH® Product is suitable for your system and intended use, please contact us in advance. We also strongly recommend that you refrain from using third-party spare parts or a combination of WEH® Products with unsuitable third-party products. You alone are responsible for reviewing the suitability of third-party products. WEH® Products and WEH® Spare parts comply with our quality and safety standards. |
| Explanation on the Pressure Equipment Directive | In general, WEH® Products with a maximum allowable operating pressure of more than 0.5 bar (PS) fall within the scope of application of the Pressure Equipment Directive 2014/68/EU, are generally classified as pressure accessories in accordance with Article 2 (5) of the same and are considered to be similar to piping. These WEH® Products may not be used as safety accessories. Furthermore, it is pointed out, that these WEH® Products are designed and placed on the market in accordance with the requirements of Article 4 (3) of the Pressure Equipment Directive 2014/68/EU.<br><br>For some products a different classification and/or categorisation is required or can be conducted on request. In these cases, if legally required, a conformity assessment procedure in accordance with Annex III of the Pressure Equipment Directive 2014/68/EU can and will also be conducted and the conformity can be declared by means of an EU Declaration of Conformity in accordance with Annex IV of the Pressure Equipment Directive 2014/68/EU. In these cases, the EU Declaration of Conformity is enclosed with the product. |
| External change management | WEH reserves the right to update, optimise and adjust its products continuously. This may result in corresponding changes of the product. Customers will be informed proactively or unsolicited by WEH only in individual cases about product updates, product optimisations and/or product adaptations that have been carried out. You are free to contact WEH at any time to request information about any product updates, product optimisations and/or product adjustments. |

# » Brochure data

This catalog was created diligently and on the basis of decades of experience.

All information/recommendations in this catalog are non-binding and are particularly subject to possible deviations or changes. For any binding information/recommendations, please refer to the verified information/recommendations in our individual orders. Particularly, due to the wide range of possible applications of WEH® Products and the unknown parameters and operating conditions linked to them, the accuracy and/or completeness of the information/recommendations in this catalog cannot be guaranteed with respect to certain individual cases. In doing so, we would like to refer once again to the information/recommendations provided in individual orders.

The application limits indicated in this catalog (e.g. for pressure, temperature, etc.) are generally theoretical values determined in a test environment. As the concrete operating conditions could differ, we cannot ensure that these values apply to a specific customer application. During the practical use, you should particularly consider that the mutual influence of operational parameters could result in changes of the maximum values. Especially, in case of any unusual operating conditions, please contact WEH before using any WEH® Products. We therefore strongly recommend that you also require any necessary binding information/recommendations to be included by us in the individual orders.

Furthermore, we point out that we cannot assume any warranty or accept any responsibility for printing errors, incomplete information or misinterpretations. Illustrations and/or images are particularly provided for illustrative purposes only and may differ in some details from the actual product. Moreover, dimensions and other technical details in this catalog are non-binding information and are provided for illustrative purposes only. The product's exact form and design result exclusively from the specific individual order. In particular, certain information/recommendations in the catalog only become integral part of the contract if they have been expressly contractually agreed.

Only the latest version of our catalog and other product related documents is valid and applicable. Please ensure that you always use the latest catalog's and documents' versions. Please feel free to contact WEH at any time and request the latest versions.

Our General Terms and Conditions and the Agreement on Protection of Know-How and Quality Assurance shall apply to deliveries and other services, unless expressly agreed otherwise.
In principle, we do not accept the General Terms and Conditions of our customers or third parties. Thank you for your understanding.

**WEH GmbH Verbindungstechnik**
**Josef-Henle-Str. 1**
**89257 Illertissen / Germany**

**Phone:** **+49 7303 9609 703**
**E-Mail:** **industry@weh.com**
**Website:** **www.weh.com**

**More questions? – Great! Don't hesitate to contact our experts.**