WEH® CNG refueling

High-performance components for natural gas vehicles and fueling stations

ORIGINAL WEH® QUALITY since 1973

50+ YEARS Quality & Safety

WEH® - We Engineer Hightech

To the current catalog version:

© All rights reserved, WEH GmbH Verbindungstechnik.
Any unauthorized copying, distribution, or other use of the copyrighted content is prohibited without the written consent of WEH GmbH Verbindungstechnik.
With the transmission of a more recent version of this document, all older versions lose their validity. The most recent version of the document applies. This can be found at www.weh.com/downloads.
Unless expressly agreed otherwise, our General Terms and Conditions and the Know-How Protection and Quality Assurance Agreement (www.weh.com) apply to all deliveries and other services.
We do not recognize the customer‘s general terms and conditions.

WEH® is a registered trademark of WEH GmbH Verbindungstechnik.

» Table of contents

1 | CNG fueling products 6

1.1 | Introduction 6

1.2 | Overview 8

2 | Products for car fueling stations 10

2.1 | Fueling nozzle TK17 CNG 10

2.2 | Fueling nozzle TK16 CNG 14

2.3 | Fueling nozzle TK10 CNG 18

2.4 | Fueling nozzle TK4 CNG 26

2.5 | Fueling nozzle TK1 CNG 30

2.6 | Breakaway coupling TSA1 CNG 34

2.7 | Inline breakaway coupling TSA2 CNG 38

3 | Products for cars (and fueling stations) 42

3.1 | Receptacle TN1 CNG 42

3.2 | Fueling system TS50 CNG 46

3.3 | Check valve TVR1 CNG 50

4 | Products for bus and truck fueling stations 52

4.1 | Fueling nozzle TK26 CNG 52

4.2 | Fueling assembly TK26 CNG 53

4.3 | Fueling nozzle TK22 CNG 56

4.4 | Fueling nozzle TK24 CNG 60

4.5 | Breakaway coupling TSA5 CNG 64

4.6 | Inline breakaway coupling TSA6 CNG 68

» Table of contents

5 | Products for buses and trucks (and fueling stations) 72

5.1 | Receptacle TN5 CNG 72

5.2 | Manifold TMF20 CNG 78

5.3 | Fueling system TS55 CNG 90

5.4 | Check valve TVR5 CNG 92

6 | Accessories 94

6.1 | Filter TSF1 CNG 94

6.2 | Filter TSF2 CNG 98

6.3 | Coalescing filter TSF2 CNG 100

6.4 | Filter TSF4 CNG 104

6.5 | Filter TSF5 CNG 108

6.6 | Defueling nozzle TK23 CNG 110

6.7 | Defueling nozzle TK6 CNG 114

6.8 | Defueling nozzle TK21 CNG 118

6.9 | Emergency fueling set TZ21 CNG 120

6.10 | Emergency fueling set TZ22 CNG 122

6.11 | CNG hoses 124

7 | Adaptor nozzles and receptacles 128

7.1 | Italian standard 128

7.2 | NZ/GOST standard - adaptor nozzles 130

7.3 | NZ/GOST standard - adaptor receptacles 132

7.4 | Buses and trucks 134

8 | Further information 136

8.1 | Technical appendix 136

8.2 | Brochure data 139

ILLUSTRATIONS

Car refueling with TK17 CNG

Source: www.erdgas-mobil.de

CNG fueling station

Source: www.erdgas-mobil.de

» Introduction

A VISION FOR A GLOBAL CHALLENGE

With great foresight for a future global challenge, WEH Gas Technology has been a pioneer in the field of alternative fuels since 1986. The aim was to develop their own CNG fueling system with maximum safety and outstanding functionality. For acceptability reasons the system should give the operator the 'feel' of a conventional refueling system despite the highly complex technology. Today the WEH® CNG fueling system has become the worldwide NGV1 standard thus rewarding WEH's entrepreneurial courage and foresight.

A complete range of products for NGV refueling is available - from fueling nozzles, hoses, breakaway couplings and filters for fueling stations to receptacles and check valves in vehicles.
Our components cover all applications for refueling cars, buses, and trucks.
The well proven design, ease of operation, safety and reliability of all WEH® Products has led to widespread customer acceptance of alternative fuels and play a major part in the development of refueling systems for alternative fuels.

Today WEH is world market leader in the field of alternative refueling systems and partner to the international automobile industry. Furthermore WEH has been committed in a number of projects worldwide promoting alternative drive systems thus also being an initiator for a mobile society with a future.

An advanced product for a high performance application
WEH's NGV product line has been designed expressly for the demanding applications of natural gas high-pressure refueling systems. All products suit the extreme flow and temperature conditions found in practical operation. Naturally all WEH®
Products are constructed of high-quality materials. Throughout many years of experience and numerous tests special seal designs and sealing materials have been developed, which meet the demands of the medium and the application.

Unique WEH® Jaw locking mechanism
All fueling nozzles have the unique WEH® Jaw locking mechanism developed by WEH. The jaw locking system is superior to ball locking systems in that it tolerates dirt and reduces wear on the receptacle of the vehicle.

Enhanced safety by integrating a dirt particle filter
Using an integrated particle filter avoids dirt ingress and therefore leakage from the receptacle which gives enhanced safety and reliability - essential features for the volatile nature of CNG products.

Technically advanced safety features
Natural gas refueling can be dangerous if unsuitable products are used. WEH® Products have a very high safety standard to reduce risk factors. Effective safety systems feature in all WEH® NGV products especially in the fueling nozzles and achieve the necessary safety standards for use at self-service fueling stations.

» Introduction

COLOR CODING FOR INSTANT IDENTIFICATION OF PRESSURE RANGE

All 250 bar (3,600 psi) fueling nozzles have a yellow color coding for operator's ease of use to visually identify the requested pressure range immediately.

A yellow impact protection characterizes all 250 bar (3,600 psi) versions of the fueling nozzles:
- TK16 CNG
- TK17 CNG
- TK22 CNG
- TK24 CNG
- TK26 CNG

The impact protections of the 200 bar (3,000 psi) versions are black.

A yellow sliding sleeve characterizes all 250 bar (3,600 psi) versions of the fueling nozzles:
- TK1 CNG
- TK4 CNG
- TK10 CNG

The sliding sleeves of the 200 bar (3,000 psi) versions are black.

The fueling-sided interface of all fueling nozzles complies with the ANSI and the CSA NGV1 standard. Further certification basis are indicated for the respective product.

COMPATIBILITY OF FUELING NOZZLES / RECEPTACLES

All WEH® Fueling nozzles and receptacles have a coding for gas type and pressure range thus not allowing connection to other gas vehicles and other pressure ranges.

OVERVIEW	Receptacle	TN1 CNG		TN5 CNG	
Fueling nozzle	***Pressure PN***	*200 bar (3,000 psi)*	*250 bar (3,600 psi)*	*200 bar (3,000 psi)*	*250 bar (3,600 psi)*
TK17 CNG TK16 CNG TK10 CNG TK4 CNG TK1 CNG	*200 bar (3,000 psi)*	✓	✓		
	250 bar (3,600 psi)		✓		
TK26 CNG TK22 CNG TK24 CNG	*200 bar (3,000 psi)*			✓	✓
	250 bar (3,600 psi)				✓

Overview

OVERVIEW OF NOZZLES / BREAKAWAY COUPLINGS

Overview of fueling nozzles					
Type	Page	Car	Bus/truck	Self-Service	
TK17 CNG	10	✓		✓	
TK16 CNG	16	✓		✓	
TK10 CNG	22	✓			
TK4 CNG	32	✓			
TK1 CNG	40	✓			
TK26 CNG	64		✓	✓	
TK22 CNG	70		✓		
TK24 CNG	74		✓		
Overview of defueling nozzles					
Type	Page	Discharging of CNG fuel tanks – car	Discharging of CNG fuel tanks – bus / truck	Discharging of trailers	
TK6 CNG	116	✓			
TK21 CNG	120		✓		
TK23 CNG	112			✓	
Overview of breakaway couplings					
Type	Page	Car	Car – inline	Bus / truck	Bus / truck – inline
TSA1 CNG	44	✓			
TSA2 CNG	48		✓		
TSA5 CNG	78			✓	
TSA6 CNG	82				✓

» Standards, approvals and memberships

CERTIFIED QUALITY MANAGEMENT

Our high quality standard is achieved by a living quality management and the certification according to international quality standards is confirmed.

Qualitätsmanagementsystem
DIN EN ISO 9001:2015

Umweltmanagementsystem
DIN EN ISO 14001:2015

INTERNATIONAL STANDARDS AND APPROVALS

The following overview shows the standards and approvals of WEH® Products. For detailed information see the respective product.

- ANSI NGV1
- ECE R110*
- ISO 14469
- ISO 15500
- ISO 15501

* For reasons of precaution, we'd like to point out that
a) regarding the delivery of each article acc. to the respective order confirmation - in particular concerning ECE / EC79 articles - WEH does not confirm the fulfilment of additional requirements of the concerned end customer,
b) WEH is not subject to any external reporting obligation with regard to external change management (see page 156) and
c) WEH does not confirm the replacement of the product in the form of a regular series delivery.
Exclusions acc. to a) - c) can be agreed with the conclusion of a customer-specific project with corresponding special conditions.

MEMBERSHIPS

WEH is member of the NGV America.

» Fueling nozzle **TK17 CNG**

DESCRIPTION

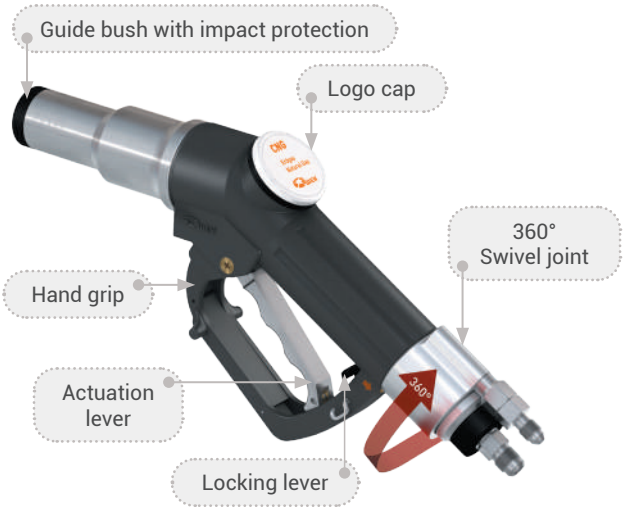

Features
- Left or right single-handed operation
- Compatible with receptacles acc. to NGV1 standard and ISO 14469 (see page 7, compatibility)
- WEH® EASY-TURN 360° swivel joint
- Easy operation
- Extremely high flow rate ➡ short filling times
- Recirculation of the vented gas
- Plastic thermal protection
- Hand grip with magnet
- WEH® Jaw locking mechanism
- Colour coded impact protection (200 bar / 3,000 psi black, 250 bar / 3,600 psi yellow)
- High-grade materials
- Coding for pressure range / gas type

The first WEH user friendly 'Pistol grip' CNG fueling nozzle has been introduced - now redesigned in the pistol grip style familiar to all fueling station users. Retaining the same outstanding technical functionality as our TK16 CNG fueling nozzle, the type TK17 CNG has been remodelled with a sleek new look. The new nozzle is just as quick and easy to use as the common petrol/diesel nozzle and has a similar look and feel. Simply lift the nozzle from the dispenser and place it onto the vehicle's receptacle. Full 360° rotation makes for easy engagement with the vehicle's fuel receptacle. Compress the actuation lever until locking lever engages and the fueling procedure begins. The natural gas can only flow through the line if there is a safe connection. After refueling disengage the nozzle's locking lever and disconnect. Please note that refueling may be stopped or paused at any time. The hand grip has a magnet for actuation of the magnet switch for activation of the dispenser.

Safety
The TK17 CNG offers optimum safety to the operator.
The fueling nozzle remains connected to the receptacle until the gas between inlet valve and receptacle is depressurized.

Application
Fueling nozzle for CNG fast filling of cars at self-service fueling stations to be used with WEH® Receptacles acc. to NGV1 standard and ISO 14469 (see page 7, compatibility).

TECHNICAL DATA

Characteristics	Basic version	
Technical nominal size	8 mm	
Nominal pressure	P30 acc. to ANSI NGV1 / B200 acc. to ISO 14469 PN = 200 bar (3,000 psi)	P36 acc. to ANSI NGV1 / B250 acc. to ISO 14469 PN = 250 bar (3,600 psi)
Max. allowable operating pressure	PS = 300 bar (4,300 psi)	PS = 350 bar (5,000 psi)
Temperature range	-40°C up to +85°C (-40 °F up to +185 °F)	
Material	Corrosion resistant	
Sealing material	Natural gas resistant	
Design	With plastic thermal protection, gas recirculation and hand grip with magnet	
Weight	Approx. 2 kg (4.41 lbs.)	
Conformity / Tests / Approvals	The products comply with ANSI NGV1-2006	

Other designs available on request

» Fueling nozzle **TK17 CNG**

ORDERING | WEH® TK17 CNG Fueling nozzle

approx. dimensions (mm)

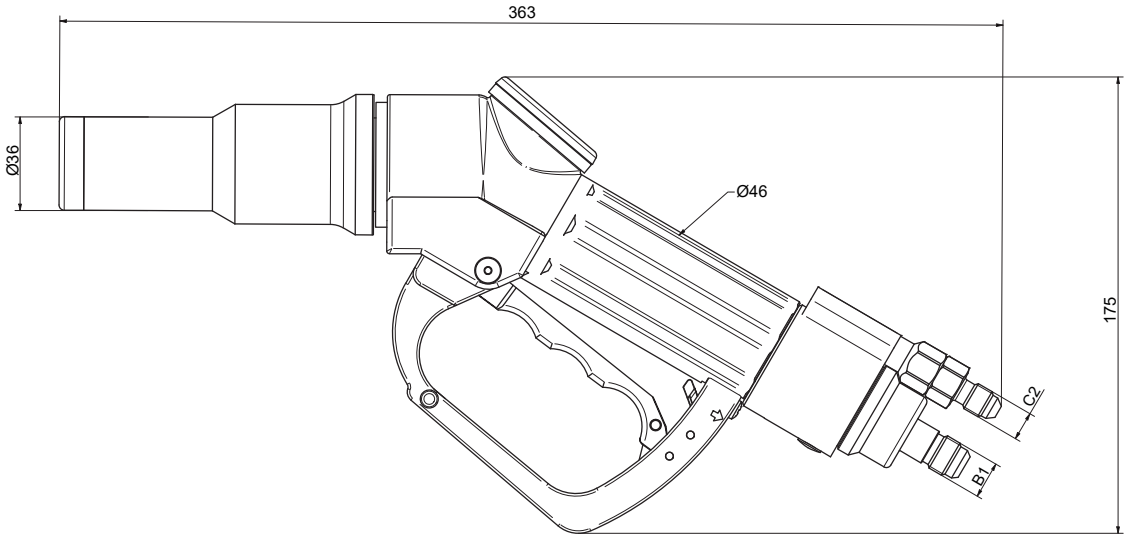

Part No.	Description	Pressure PS	B1 (male thread)	C2 (male thread)
C1-100529-X01	TK17 CNG	300 bar / 4,300 psi	UNF 9/16"-18*	UNF 7/16"-20*
C1-100077-X01	TK17 CNG	350 bar / 5,000 psi	UNF 9/16"-18*	UNF 7/16"-20*

* acc. to SAE J514, 37° cone

Please see page 12 an 13 onwards for fueling assemblies consisting of fueling nozzle, hose set and breakaway coupling.

ACCESSORIES

The following accessories are available for the WEH® TK17 CNG Fueling nozzle:

Dispenser mounting

Mounting for safe attachment of the fueling nozzle to the dispenser. Optionally with or without switch actuation.
Design: Aluminum, stainless steel

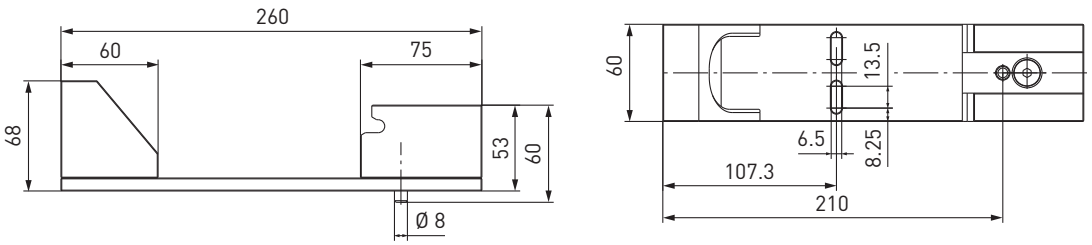

Part No.	Description
C1-66775	Dispenser mounting (switch actuated)
C1-65643	Dispenser mounting (not switch actuated)

» Fueling nozzle **TK17 CNG**

Hose sets TK17 CNG - TSA1 CNG

Filling and venting hoses for connecting fueling nozzle and TSA1 CNG breakaway coupling, complete with fittings and press-fittings supported by coil spring stubs. Available as single or twin hoses (permanently bonded).

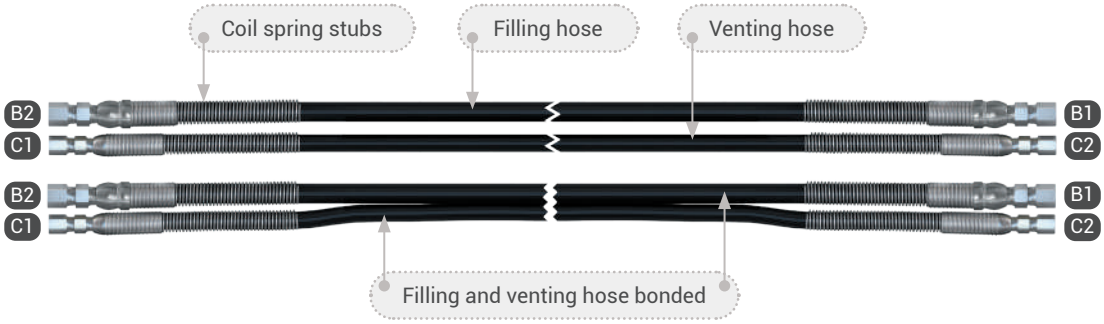

Part No.	B1/B2 (female thread)	C1/C2 (female thread)	Hose length
C1-50487	UNF 9/16"-18*	UNF 7/16"-20*	3 m
C1-42304	UNF 9/16"-18*	UNF 7/16"-20*	4 m
C1-58587	UNF 9/16"-18*	UNF 7/16"-20*	5 m

* acc. to SAE J514, 37° cone
All designs also available with permanently bonded filling and venting hose. Please contact us!

Hose sets TK17 CNG - TSA2 CNG

Filling and venting hoses for connecting fueling nozzle / dispenser and TSA2 CNG inline breakaway coupling, complete with fittings and press-fittings supported by coil spring stubs.

Part No.	B1/B2 (female thread)	C1/C2 (female thread)	Hose length
On request	UNF 9/16"-18*	UNF 7/16"-20*	2.5 | 0.5 m
On request	UNF 9/16"-18*	UNF 7/16"-20*	3.5 | 0.5 m
On request	UNF 9/16"-18*	UNF 7/16"-20*	4.5 | 0.5 m

* acc. to SAE J514, 37° cone
All designs also available with permanently bonded filling and venting hose. Please contact us!

Fueling assembly WEH® TK17 CNG with WEH® TSA1 CNG Breakaway coupling

Complete fueling assembly consisting of a TK17 CNG (200 bar / 3,000 psi) fueling nozzle, a hose set and a TSA1 CNG breakaway coupling (with 40 µm filter).

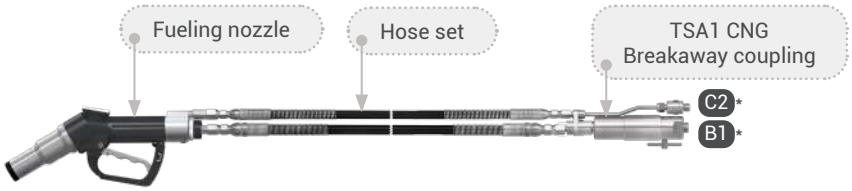

Part No.	Description	Hose length
C1-80265-X01	Fueling assembly with TSA1 CNG breakaway coupling	3 m
C1-106328-X01	Fueling assembly with TSA1 CNG breakaway coupling	4 m
C1-106329-X01	Fueling assembly with TSA1 CNG breakaway coupling	5 m

All designs are also available with a TK17 CNG - 250 bar (3,600 psi) fueling nozzle or with permanently bonded filling and venting hose. Please contact us!
* For connection sizes 'B1' and 'C2' see page 44, TSA1 CNG breakaway coupling.

» Fueling nozzle **TK17 CNG**

ORDERING | Fueling assembly WEH® TK17 CNG with WEH® TSA2 CNG Inline breakaway coupling

Complete fueling assembly consisting of a TK17 CNG (200 bar / 3,000 psi) fueling nozzle, a hose set and a TSA2 CNG inline breakaway coupling.

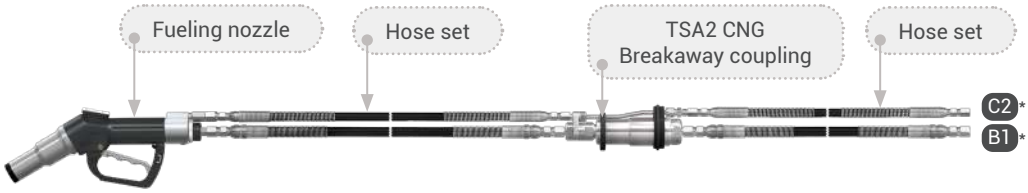

Part No.	Description	Hose length
C1-96368-X01	Fueling assembly with TSA2 CNG inline breakaway coupling	2.5 | 0.5 m
C1-106331-X01	Fueling assembly with TSA2 CNG inline breakaway coupling	3.5 | 0.5 m
C1-106332-X01	Fueling assembly with TSA2 CNG inline breakaway coupling	4.5 | 0.5 m

All designs are also available with a TK17 CNG - 250 bar (3,600 psi) fueling nozzle or with permanently bonded filling and venting hose. Please contact us!
* For connection sizes 'B1' and 'C2' see page 140, TK17 CNG hose set.

Fittings

Stainless steel fittings for connecting port 'B1' to the filling hose or port 'C2' to the venting hose.

Part No.	Description	Connection fueling nozzle	Connection filling hose
E80-79538	Fitting	UNF 9/16"-18* female thread	UNF 9/16"-18** female thread
E80-65592	Fitting	UNF 9/16"-18* female thread	NPT 1/4" female thread

* acc. to SAE J514, 37° cone
** acc. to SAE J1926-1

Please see page 34 and 38 onwards for a detailed overview on all available fittings.

Spare parts

Various parts are available as spares for the TK17 CNG fueling nozzle.

Part No.	Description
E80-140262	1 Impact protection 200 bar / 3,000 psi (black)
E80-106830	1 Impact protection 250 bar / 3,600 psi (yellow)
E80-84030	2 Locking lever
E69-60763	3 Logo cap
On request	Maintenance spray

When ordering please specify the part no. engraved on the fueling nozzle.

» Fueling nozzle **TK16 CNG**

DESCRIPTION

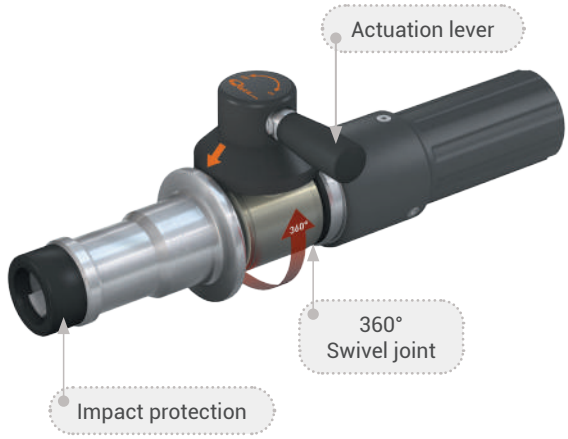

Features
- Super light ➡ only 1,750 grams
- Compatible with receptacles acc. to NGV1 standard and ISO 14469 (see page 7, compatibility)
- WEH® EASY-TURN 360° swivel joint for actuation lever
- Easy operation
- Extremely high flow rate ➡ short filling times
- Recirculation of the vented gas
- Plastic thermal protection
- WEH® Jaw locking mechanism
- Colour coded impact protection (200 bar / 3,000 psi black, 250 bar / 3,600 psi yellow)
- High-grade materials
- Coding for pressure range / gas type

TK16 CNG, the world's most popular NGV1 fueling nozzle.
Type TK16 CNG is very light in weight and therefore easy to operate. The actuation lever is located on the integrated swivel joint making it easy to rotate into the optimal actuating position. The compact actuation lever needs less effort to actuate the nozzle.

Safety
The TK16 CNG offers optimum safety to the operator.
The fueling nozzle remains connected to the receptacle until the gas between inlet valve and receptacle is depressurized.

Application
Fueling nozzle for CNG fast filling of cars at self-service fueling stations to be used with WEH® Receptacles acc. to NGV1 standard and ISO 14469 (see page 7, compatibility).

TECHNICAL DATA

Characteristics	Basic version	
Technical nominal size	8 mm	
Nominal pressure	P30 acc. to ANSI NGV1 / B200 acc. to ISO 14469 PN = 200 bar (3,000 psi)	P36 acc. to ANSI NGV1 / B250 acc. to ISO 14469 PN = 250 bar (3,600 psi)
Max. allowable operating pressure	PS = 300 bar (4,300 psi)	PS = 350 bar (5,000 psi)
Temperature range	-40°C up to +85°C (-40 °F up to +185 °F)	
Material	Corrosion resistant	
Sealing material	Natural gas resistant	
Design	With plastic thermal protection, gas recirculation and hand grip with magnet	
Weight	Approx. 1.75 kg	
Conformity / Tests / Approvals	The products comply with ANSI NGV1-2006	

Other designs available on request

» Fueling nozzle **TK16 CNG**

ORDERING | WEH® TK16 CNG Fueling nozzle

approx. dimensions (mm)

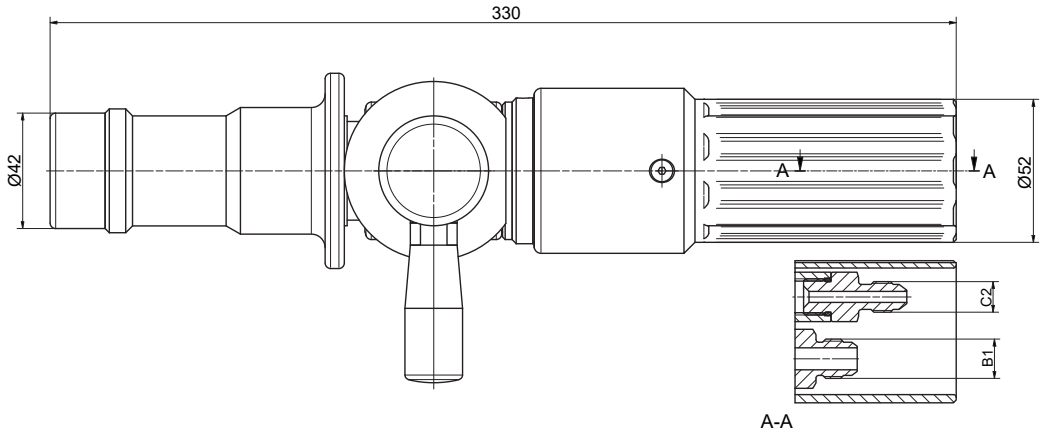

Part No.	Description	Pressure PS	B1 (male thread)	C2 (male thread)
C1-35299-X5-X01	TK16 CNG	300 bar / 4,3000 psi	UNF 9/16"-18*	UNF 7/16"-20*
C1-101084-X01	TK16 CNG	350 bar / 5,000 psi	UNF 9/16"-18*	UNF 7/16"-20*

* acc. to SAE J514, 37° cone

Please see page 17 onwards for fueling assemblies consisting of fueling nozzle, hose set and breakaway coupling.

ACCESSORIES

The following accessories are available for the WEH® TK16 CNG Fueling nozzle:

Dispenser mounting

Mounting for safe attachment of the fueling nozzle to the dispenser. Optionally with or without switch actuation.
Design: Aluminum, stainless steel

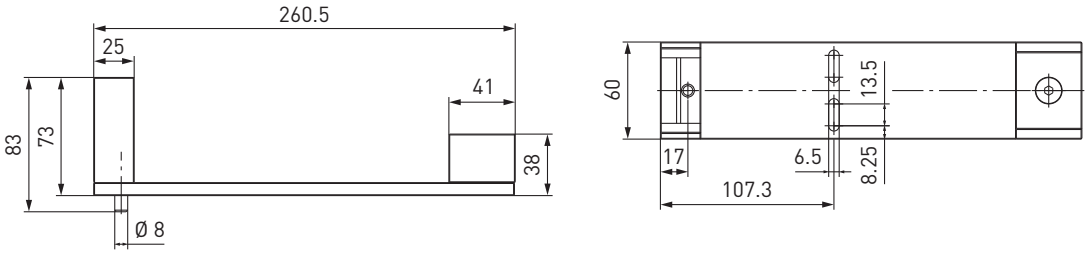

Part No.	Description
C1-51233	Dispenser mounting (switch actuated)
C1-51236	Dispenser mounting (not switch actuated)

WEH® breakaway coupling

The appropriate TSA1 CNG and TSA2 CNG breakaway coupling can be found on pages 34 and 38.

» Fueling nozzle **TK16 CNG**

Hose sets TK16 CNG - TSA1 CNG

Filling and venting hoses for connecting fueling nozzle and TSA1 CNG breakaway coupling, complete with fittings and press-fittings supported by coil spring stubs. Available as single or twin hoses (permanently bonded).

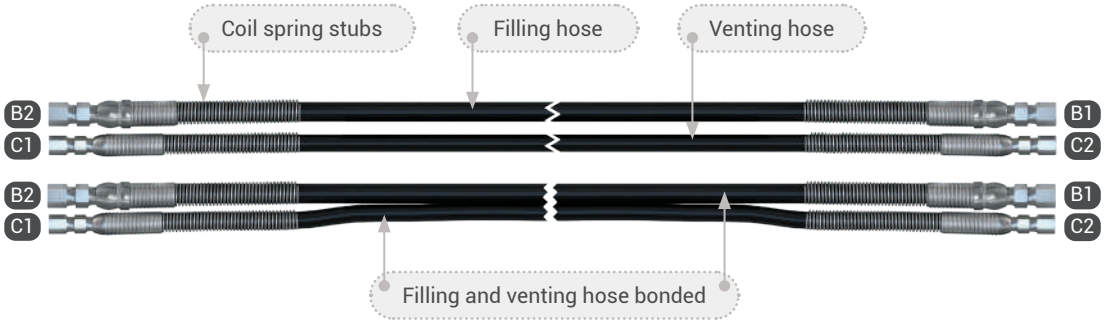

Part No.	B1/B2 (female thread)	C1/C2 (female thread)	Hose length
C1-50487	UNF 9/16"-18*	UNF 7/16"-20*	3 m
C1-42304	UNF 9/16"-18*	UNF 7/16"-20*	4 m
C1-58587	UNF 9/16"-18*	UNF 7/16"-20*	5 m

* acc. to SAE J514, 37° cone
All designs also available with permanently bonded filling and venting hose. Please contact us!

Hose sets TK16 CNG - TSA2 CNG

Filling and venting hoses for connecting fueling nozzle / dispenser and TSA2 CNG inline breakaway coupling, complete with fittings and press-fittings supported by coil spring stubs.

Part No.	B1/B2 (female thread)	C1/C2 (female thread)	Hose length
On request	UNF 9/16"-18*	UNF 7/16"-20*	2.5 | 0.5 m
On request	UNF 9/16"-18*	UNF 7/16"-20*	3.5 | 0.5 m
On request	UNF 9/16"-18*	UNF 7/16"-20*	4.5 | 0.5 m

* acc. to SAE J514, 37° cone
All designs also available with permanently bonded filling and venting hose. Please contact us!

Conversion Kit

We also offer a conversion kit to fit fueling hoses with older fittings. The conversion kit consists of one fitting each for the filling and the venting line. The existing TK16 CNG fueling nozzle fittings must be removed and replaced by the conversion kit fittings.

Part No.	Description	Connection fueling nozzle	Connection filling hose
W59444	Conversion Kit	UNF 9/16"-18* female thread	Tube Ø 6
W86380	Conversion Kit	UNF 9/16"-18* female thread	Tube Ø 1/4"

* acc. to SAE J514, 37° cone

Fittings

Stainless steel fittings for connecting port 'B1' to the filling hose or port 'C2' to the venting hose.

Part No.	Description	Connection fueling nozzle	Connection filling hose
E80-79538	Fitting	UNF 9/16"-18* female thread	UNF 9/16"-18** female thread
E80-65592	Fitting	UNF 9/16"-18* female thread	NPT 1/4" female thread

* acc. to SAE J514, 37° cone
** acc. to SAE J1926-1

A detailed overview of all available screw connections is available on request.

» Fueling nozzle **TK16 CNG**

ORDERING | Fueling assembly WEH® TK16 CNG with WEH® TSA1 CNG Breakaway coupling

Complete fueling assembly consisting of a TK16 CNG (200 bar / 3,000 psi) fueling nozzle, a hose set and a TSA1 CNG breakaway coupling (with 40 µm filter).

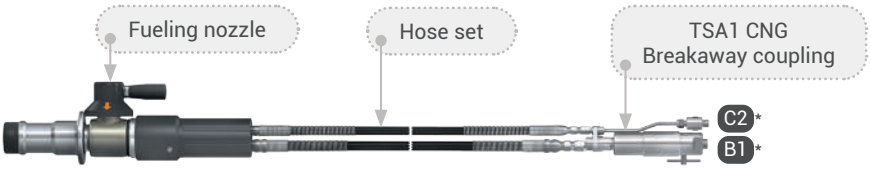

Part No.	Description	Hose length
C1-81365-X01	Fueling assembly with TSA1 CNG breakaway coupling	3 m
C1-117123-X01	Fueling assembly with TSA1 CNG breakaway coupling	4 m
C1-106333-X01	Fueling assembly with TSA1 CNG breakaway coupling	5 m

All designs are also available with a TK16 CNG - 250 bar (3,600 psi) fueling nozzle or with permanently bonded filling and venting hose. Please contact us!
* For connection sizes 'B1' and 'C2' see page 44, TSA1 CNG breakaway coupling.

ORDERING | Fueling assembly WEH® TK16 CNG with WEH® TSA2 CNG Inline breakaway coupling

Complete fueling assembly consisting of a TK16 CNG (200 bar / 3,000 psi) fueling nozzle, a hose set and a TSA2 CNG inline breakaway coupling.

Part No.	Description	Hose length
C1-106330-X01	Fueling assembly with TSA2 CNG inline breakaway coupling	2.5 | 0.5 m
C1-106334-X01	Fueling assembly with TSA2 CNG inline breakaway coupling	3.5 | 0.5 m
C1-106335-X01	Fueling assembly with TSA2 CNG inline breakaway coupling	4.5 | 0.5 m

All designs are also available with a TK16 CNG - 250 bar (3,600 psi) fueling nozzle or with permanently bonded filling and venting hose. Please contact us!
* For connection sizes 'B1' and 'C2' see page 140, TK16 CNG hose set.

Spare parts

Various parts are available as spares for the TK16 CNG fueling nozzle.

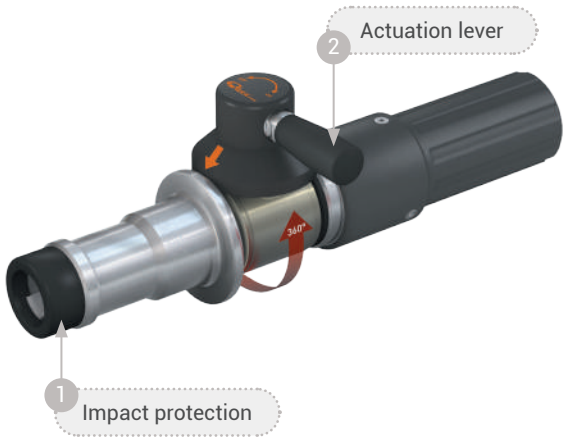

Part No.	Description
E81-143605	1 Impact protection 200 bar / 3,000 psi (black)
E80-106824	1 Impact protection 250 bar / 3,600 psi (yellow)
W72504	2 Actuation lever
On request	Maintenance spray

» Fueling nozzle **TK10 CNG**

DESCRIPTION

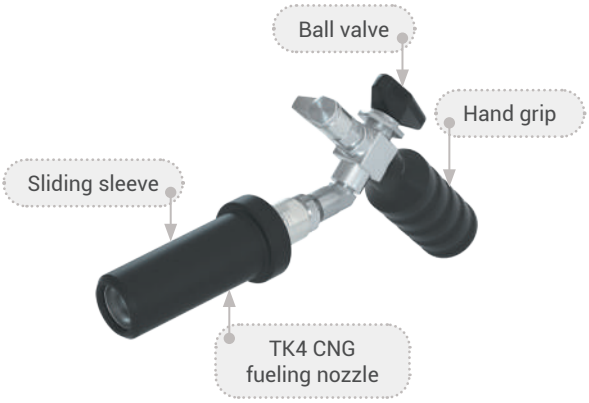

Features
- Compatible with receptacles acc. to NGV1 standard and ISO 14469 (see page 7, compatibility)
- Push-to-connect
- Integrated shut-off valve
- Plastic thermal protection
- Version with or without gas recirculation
- Grip position available at 45° or 90°
- Ergonomic design
- WEH® Jaw locking mechanism
- Colour coded sliding sleeve (200 bar / 3,000 psi black, 250 bar / 3,600 psi yellow)
- High-grade materials

The WEH® TK10 CNG Fueling nozzle combines user comfort with maximum convenience. The integrated WEH® TK4 CNG Fueling nozzle features 'push-to-connect' jaw locking system which automatically moves the sliding sleeve back when making a connection. The ergonomic design of the hand grip enables an easy connection to the receptacle. The hand grip is angled to prevent stresses on the high pressure hose and hose damage due to chafing on the ground.

Refueling starts after opening the ball valve. Closing the ball valve finishes refueling. Fueling nozzles with integrated gas recirculation are vented via the gas recirculation, fueling nozzles without gas recirculation are vented via a sound absorber which is directly installed at the nozzle. The TK10 CNG can then be disconnected by pulling back the sliding sleeve of the TK4 CNG.

The extended construction of the integrated TK4 CNG fueling nozzle helps in refueling difficult-to-access receptacles. WEH® Jaws grip symmetrically, avoiding damage to the receptacle profile which could result in leakage.

Application
Fueling nozzle for CNG fast filling of cars to be used with WEH® Receptacles acc. to NGV1 standard and ISO 14469 (see page 7, compatibility).
Operation only by specially trained service personnel. Not for self-service operation!

TECHNICAL DATA

Characteristics	Basic version	
Technical nominal size	4 mm	
Nominal pressure	P30 acc. to ANSI NGV1 / B200 acc. to ISO 14469 PN = 200 bar (3,000 psi)	P36 acc. to ANSI NGV1 / B250 acc. to ISO 14469 PN = 250 bar (3,600 psi)
Max. allowable operating pressure	PS = 300 bar (4,300 psi)	PS = 350 bar (5,000 psi)
Temperature range	-40°C up to +85°C (-40 °F up to +185 °F)	
Material	Corrosion resistant	
Sealing material	Natural gas resistant	
Design	With plastic thermal protection With or without gas recirculation Grip position 45° or 90°	
Weight	Approx. 1.3 kg (2.87 lbs.)	
Conformity / Tests / Approvals	The products comply with ANSI NGV1-2006 (applies to TK4 CNG)	

Other designs available on request

» Fueling nozzle **TK10 CNG**

ORDERING | WEH® TK10 CNG Fueling nozzle with gas recirculation and grip position 45°

approx. dimensions (mm)

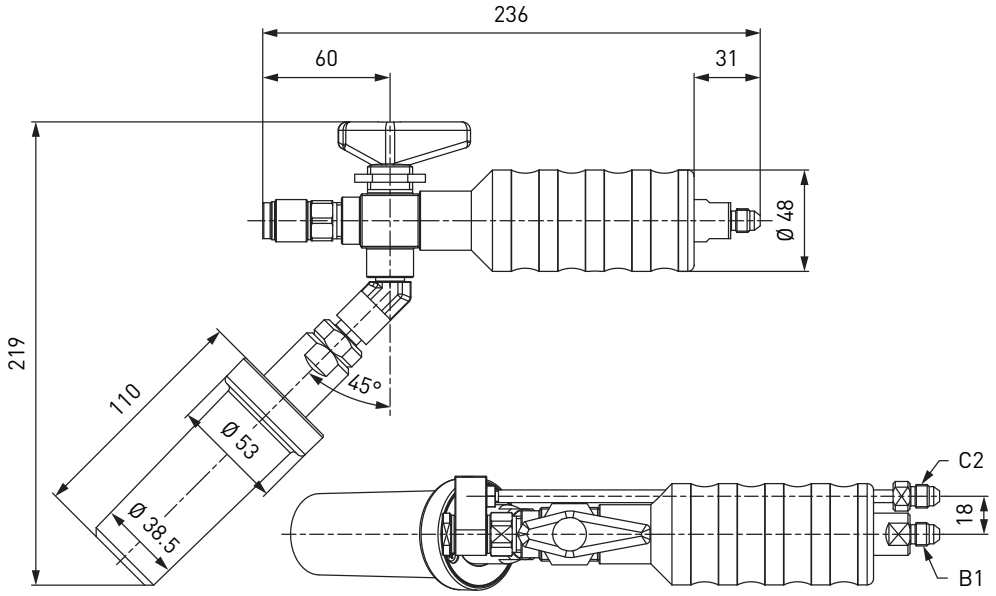

Part No.	Description	Pressure PS	B1 (male thread)	C2 (male thread)
C1-126013-X01	TK10 CNG	300 bar / 4,3000 psi	UNF 7/16"-20*	UNF 7/16"-20*
On request	TK10 CNG	350 bar / 5,000 psi	UNF 7/16"-20*	UNF 7/16"-20*

* acc. to SAE J514, 37° cone

» Fueling nozzle **TK10 CNG**

ORDERING | WEH® TK10 CNG Fueling nozzle with gas recirculation and grip position 90°

approx. dimensions (mm)

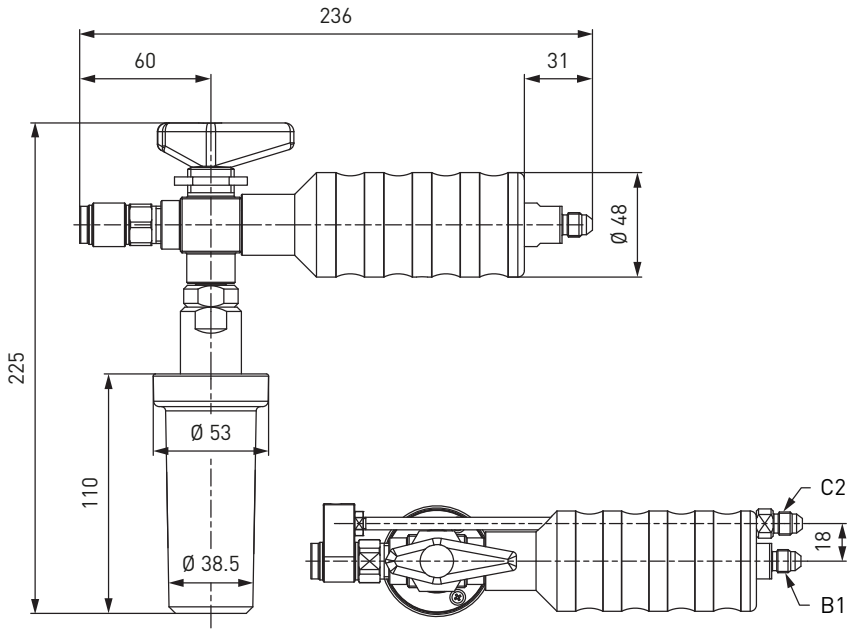

Part No.	Description	Pressure PS	B1 (male thread)	C2 (male thread)
C1-126014-X01	TK10 CNG	300 bar / 4,3000 psi	UNF 7/16“-20*	UNF 7/16“-20*
On request	TK10 CNG	350 bar / 5,000 psi	UNF 7/16“-20*	UNF 7/16“-20*

* acc. to SAE J514, 37° cone

» Fueling nozzle **TK10 CNG**

ORDERING | WEH® TK10 CNG Fueling nozzle without gas recirculation and grip position 45°

approx. dimensions (mm)

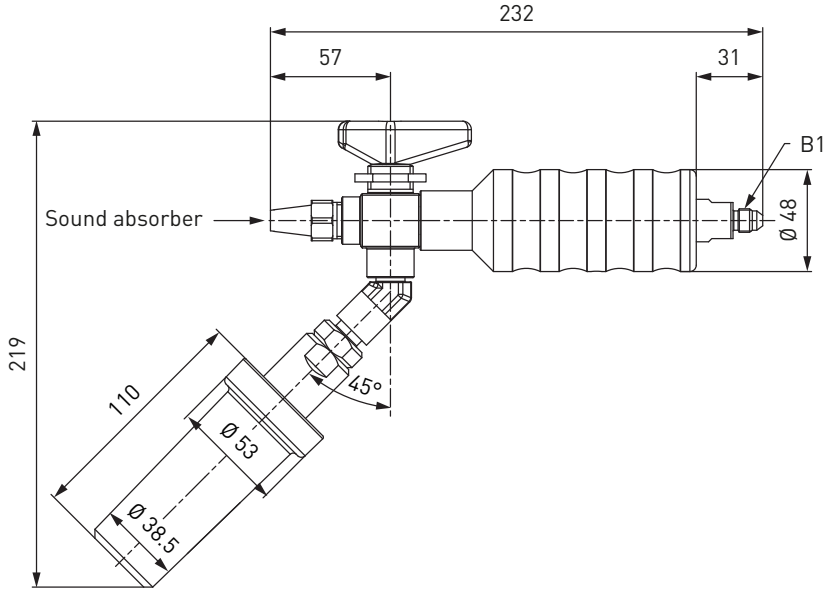

Part No.	Description	Pressure PS	B1 (male thread)
C1-126006-X01	TK10 CNG	300 bar / 4,3000 psi	UNF 7/16"-20*
On request	TK10 CNG	350 bar / 5,000 psi	UNF 7/16"-20*

* acc. to SAE J514, 37° cone

» Fueling nozzle **TK10 CNG**

ORDERING | WEH® TK10 CNG Fueling nozzle without gas recirculation and grip position 90°

approx. dimensions (mm)

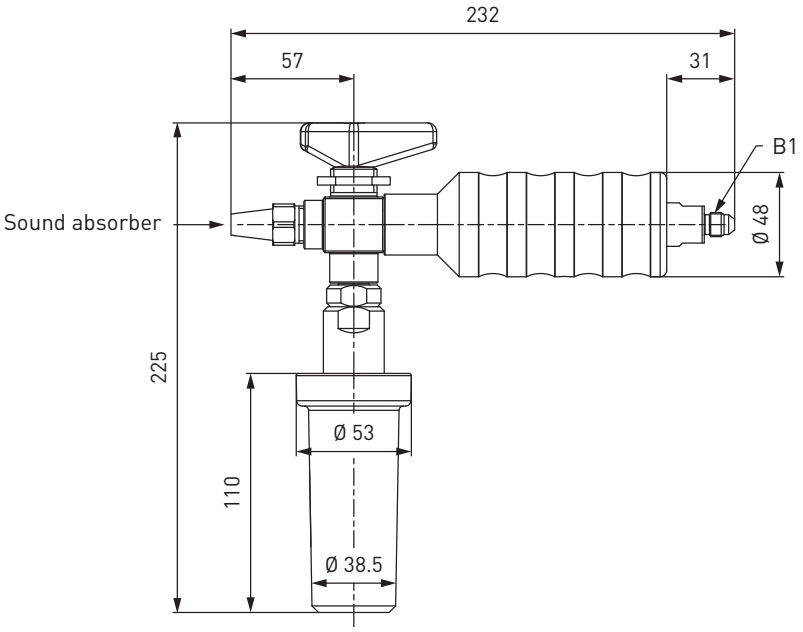

Part No.	Description	Pressure PS	B1 (male thread)
C1-126008-X01	TK10 CNG	300 bar / 4,3000 psi	UNF 7/16"-20*
On request	TK10 CNG	350 bar / 5,000 psi	UNF 7/16"-20*

* acc. to SAE J514, 37° cone

On request inlet port 'B1' is also available with other thread sizes.

Please see page 24 and 25 onwards for fueling assemblies consisting of fueling nozzle, hose set and breakaway coupling.

» Fueling nozzle **TK10 CNG**

ACCESSORIES

The following accessories are available for WEH® TK10 CNG Fueling nozzle:

Hose sets TK10 CNG - TSA1 CNG

Filling and venting hoses for connecting fueling nozzle and TSA1 CNG breakaway coupling, complete with fittings and press-fittings supported by coil spring stubs.

Part No.	B1/B2 (female thread)	C1/C2 (female thread)	Hose length
C1-106385	UNF 7/16"-20*	UNF 7/16"-20*	3 m
C1-106386	UNF 7/16"-20*	UNF 7/16"-20*	4 m
C1-106387	UNF 7/16"-20*	UNF 7/16"-20*	5 m

* acc. to SAE J514, 37° cone

Hose sets TK10 CNG - TSA2 CNG

Filling and venting hoses for connecting fueling nozzle resp. dispenser and TSA2 CNG inline breakaway coupling, complete with fittings and press-fittings supported by coil spring stubs.

Part No.	B1/B2 (female thread)	C1/C2 (female thread)	Hose length
C1-106395	UNF 7/16"-20*	UNF 7/16"-20*	2.5 | 0.5 m
C1-106396	UNF 7/16"-20*	UNF 7/16"-20*	3.5 | 0.5 m
C1-106397	UNF 7/16"-20*	UNF 7/16"-20*	4.5 | 0.5 m

* acc. to SAE J514, 37° cone

WEH® breakaway coupling

The appropriate TSA1 CNG and TSA2 CNG breakaway coupling can be found on pages 34 and 38.

» Fueling nozzle **TK10 CNG**

Filling hoses

Filling hoses for connecting fueling nozzles without gas recirculation and dispenser, complete with fittings and press-fittings supported by coil spring stubs.

Part No.	B1/B2 (female thread)	Hose length
E68-1032-3000	UNF 7/16"-20*	3 m
E68-1032-4000	UNF 7/16"-20*	4 m
E68-1032-5000	UNF 7/16"-20*	5 m

* acc. to SAE J514, 37° cone

Fittings

Stainless steel fittings for connecting port 'B1' to the filling hose or port 'C2' to the venting hose.

Part No.	Description	Connection fueling nozzle	Connection filling hose
E80-648P	Fitting	UNF 7/16"-20* female thread	UNF 9/16"-18* male thread
E80-32692	Fitting	UNF 7/16"-20* female thread	UNF 7/16"-20* male thread
E80-62138	Fitting	UNF 7/16"-20* female thread	NPT 1/4" female thread

* acc. to SAE J514, 37° cone

A detailed overview of all available fittings is available on request.

ORDERING | Fueling assembly WEH® TK10 CNG with gas recirculation and WEH® TSA1 CNG Breakaway coupling

Complete fueling assembly consisting of a TK10 CNG (200 bar / 3000 psi) fueling nozzle with gas recirculation and grip position 45°, a hose set and a TSA1 CNG breakaway coupling (with 40 µm filter).

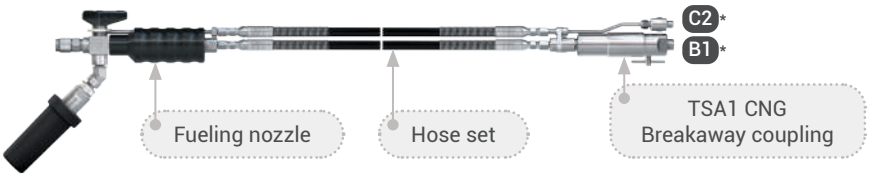

Part No.	Description	Hose length
C1-106384	Fueling assembly with TSA1 CNG breakaway coupling	3 m
C1-106389	Fueling assembly with TSA1 CNG breakaway coupling	4 m
C1-106390	Fueling assembly with TSA1 CNG breakaway coupling	5 m

All designs are also available with a TK10 CNG - 250 bar (3600 psi) fueling nozzle and/or grip position 90°.
Please contact us!
* For connection sizes 'B1' and 'C2' see page 44, TSA1 CNG breakaway coupling.

» Fueling nozzle **TK10 CNG**

ORDERING | Fueling assembly WEH® TK10 CNG with gas recirculation and WEH® TSA2 CNG Inline breakaway coupling

Complete fueling assembly consisting of a TK10 CNG (200 bar / 3000 psi) fueling nozzle with gas recirculation and grip position 90°, a hose set and a TSA2 CNG inline breakaway coupling.

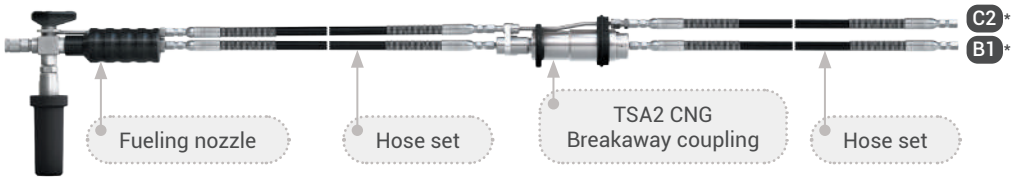

Part No.	Description	Hose length
C1-168496	Fueling assembly with TSA2 CNG inline breakaway coupling	2.5 | 0.5 m
C1-171630	Fueling assembly with TSA2 CNG inline breakaway coupling	3.5 | 0.5 m
C1-171639	Fueling assembly with TSA2 CNG inline breakaway coupling	4.5 | 0.5 m

All designs are also available with a TK10 CNG - 250 bar (3600 psi) fueling nozzle and/or grip position 45°. Please contact us!
* For connection sizes 'B2' and 'C2' see page 140, TK10 CNG hose set.

Spare parts

Various parts are available as spares for the TK10 CNG fueling nozzle.

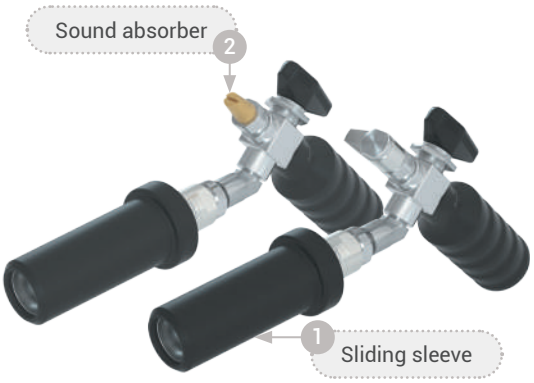

Part No.	Description
W144266	1 Spare parts set 200 bar / 3,000 psi (black sliding sleeve incl. disk and 3 screws)
W144267	1 Spare parts set 250 bar / 3,600 psi (yellow sliding sleeve incl. disk and 3 screws)
E69-9311	2 Sound absorber for TK10 CNG without gas recirculation
On request	Maintenance spray

» Fueling nozzle **TK4 CNG**

DESCRIPTION

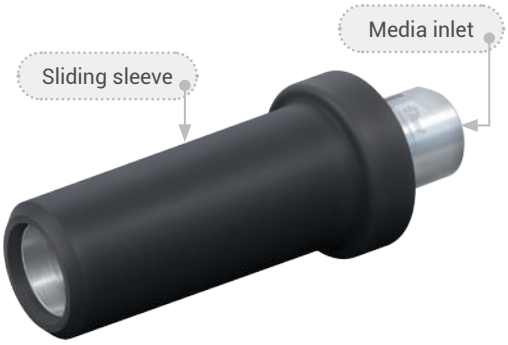

Features
- Compatible with receptacles acc. to NGV1 standard and ISO 14469 (see page 7, compatibility)
- Push-Pull actuation
- Integrated shut-off valve
- Plastic thermal protection
- WEH® Jaw locking mechanism
- Colour coded sliding sleeve (200 bar / 3,000 psi black, 250 bar / 3,600 psi yellow)
- High-grade materials
- Compact design

The TK4 CNG fueling nozzle is designed specifically for fast filling of vehicles having an NGV1 receptacle at fueling stations with NGV1 standard and is best suited for this application.
The TK4 CNG is now even easier to operate. The clamping jaws are opened when the nozzle is disconnected and the sliding sleeve need not be pulled back to connect the nozzle. Just push the nozzle straight onto the receptacle and the TK4 CNG jaws clamp tightly. Once the fueling nozzle is connected, the shut-off valve in the nozzle opens and the pressure-tight connection is established.
The extended construction of the fueling nozzle allows easy refueling of difficult-to-access receptacles.

Application
Fueling nozzle for CNG fast filling of cars to be used with WEH® Receptacles acc. to NGV1 standard and ISO 14469 (see page 7, compatibility).
Operation only by specially trained service personnel. Not for self-service operation!

TECHNICAL DATA

Characteristics	Basic version	
Technical nominal size	8 mm	
Nominal pressure	P30 acc. to ANSI NGV1 / B200 acc. to ISO 14469 PN = 200 bar (3,000 psi)	P36 acc. to ANSI NGV1 / B250 acc. to ISO 14469 PN = 250 bar (3,600 psi)
Max. allowable operating pressure	PS = 300 bar (4,300 psi)	PS = 350 bar (5,000 psi)
Temperature range	-40 °C up to +85 °C (-40 °F up to +185 °F)	
Material	Corrosion resistant	
Sealing material	Natural gas resistant	
Design	With plastic thermal protection	
Weight	Approx. 0.4 kg (0.88 lbs.)	
Conformity / Tests / Approvals	The products comply with ANSI NGV1-2006	

Other designs available on request

» Fueling nozzle **TK4 CNG**

ORDERING | WEH® TK4 CNG Fueling nozzle

approx. dimensions (mm)

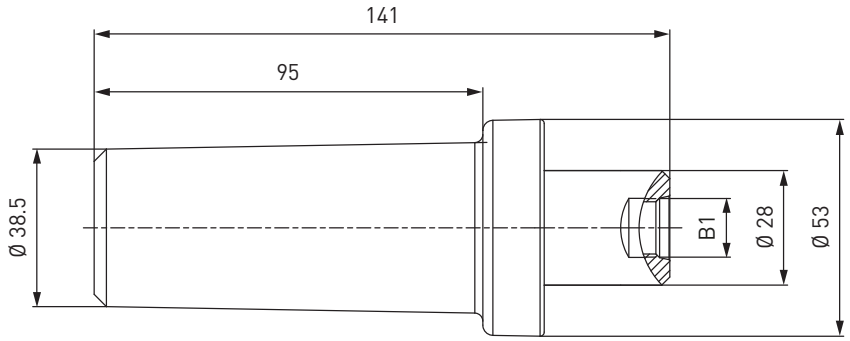

Part No.	Description	Pressure PS	B1 (female thread)
C1-112765-X01	TK4 CNG	300 bar / 4,3000 psi	UNF 9/16"-18*
C1-112764-X01	TK4 CNG	350 bar / 5,000 psi	UNF 9/16"-18*
C1-125997-X01	TK4 CNG	300 bar / 4,3000 psi	G3/8"

* acc. to SAE J1926-1

On request, TK4 CNG is also available directly with a "B1" threaded connection of your choice or in the TK4i version, suitable for the Italian nipple profile.

ACCESSORIES

The following accessories are available for the WEH® TK4 CNG Fueling nozzle:

Dispenser mounting

Mounting for safe attachment of the fueling nozzle to the dispenser. Design: stainless steel

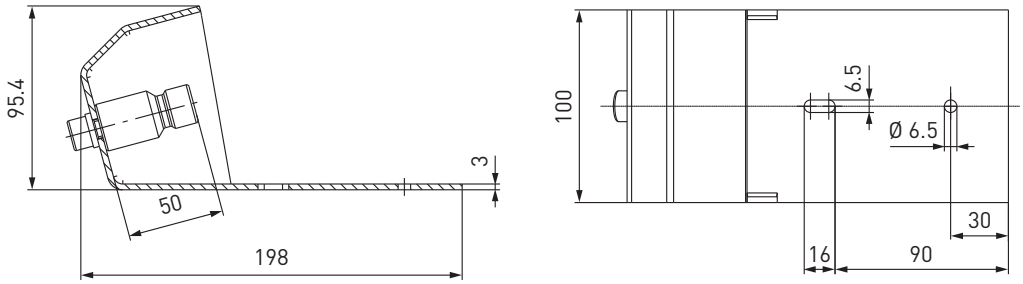

Part No.	Description
C1-100205	Dispenser mounting (not switch actuated)

» Fueling nozzle **TK4 CNG**

Filter TSF1 CNG (40 µm)

We recommend the installation of a TSF1 CNG filter (see page 96) between the nozzle and the filling hose. The filter protects your system from damage due to dirt ingress.

Part No.	Description	TNW	Pressure PS	B1	B2
C1-94070-X01	TSF1 CNG	8 mm	350 bar / 5,000 psi	UNF 9/16"-18* female thread	UNF 9/16"-18* male thread
C1-106854-X01	TSF1 CNG	8 mm	350 bar / 5,000 psi	UNF 9/16"-18** male thread	UNF 9/16"-18* male thread

* acc. to SAE J1926-1
** acc. to SAE J514, 37° cone

Filling hoses

Filling hoses for connecting fueling nozzle and dispenser, complete with fittings and press-fittings supported by coil spring stubs.

Part No.	B1/B2 (female thread)	Hose length
E68-1031-3000	UNF 9/16"-18*	3 m
E68-1031-4000	UNF 9/16"-18*	4 m
E68-1031-5000	UNF 9/16"-18*	5 m

* acc. to SAE J514, 37° cone

WEH® breakaway coupling

The appropriate TSA1 CNG and TSA2 CNG breakaway coupling can be found on pages 34 and 38.

Fittings

Stainless steel fittings for connecting port 'B1' to the filling hose.

Part No.	Description	Connection fueling nozzle	Connection filling hose
W6702	Fitting	UNF 9/16"-18** male thread	UNF 9/16"-18* male thread
W6705	Fitting	UNF 9/16"-18** male thread	UNF 7/16"-20* male thread
W6927	Fitting	UNF 9/16"-18** male thread	UNF 7/8"-14* male thread
E80-561P	Fitting	UNF 9/16"-18** male thread	NPT 1/4" male thread

* acc. to SAE J514, 37° cone
** acc. to SAE J1926-1

A detailed overview of all available fittings is available on request.

» Fueling nozzle **TK4 CNG**

Spare parts

Various parts are available as spares for the TK4 CNG fueling nozzle.

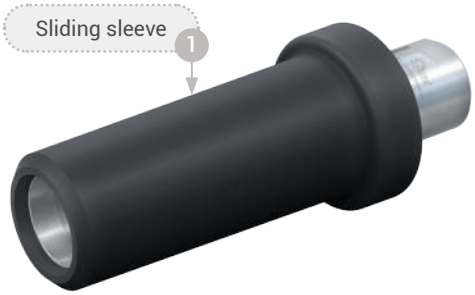

Part No.	Description
W132266	1 Spare parts set 200 bar / 3,000 psi (black sliding sleeve incl. disc and 3 screws)
W132267	1 Spare parts set 250 bar / 3,600 psi (yellow sliding sleeve incl. disc and 3 screws)
On request	Maintenance spray

» Fueling nozzle **TK1 CNG** for Slow-Fill

DESCRIPTION

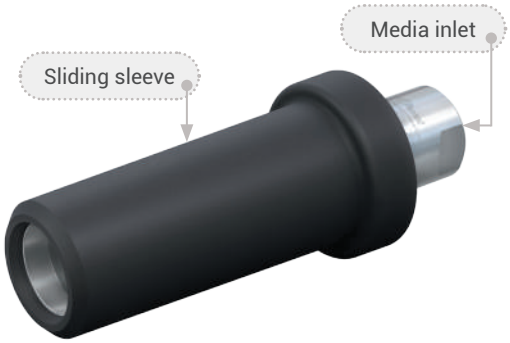

Features
- Compatible with receptacles acc. to NGV1 standard and ISO 14469 (see page 7, compatibility)
- Push-Pull actuation
- Integrated shut-off valve
- Plastic thermal protection
- WEH® Jaw locking mechanism
- Colour coded sliding sleeve (200 bar / 3,000 psi black, 250 bar / 3,600 psi yellow)
- High-grade materials
- Compact design

The TK1 CNG fueling nozzle is designed specifically for time filling of vehicles with 'Fuelmaker' compressors and is best suited for this application.
The TK1 CNG is now even easier to operate. The clamping jaws are opened when the nozzle is disconnected and the sliding sleeve need not being pulled back to connect the nozzle. Only push the nozzle straight onto the receptacle. The jaws of the TK1 CNG clamp onto the receptacle. While the fueling nozzle is connected, the shut-off valve in the nozzle will open - the pressure-tight connection is established. Even difficult-to-access receptacles can easily be refuelled due to the extended construction of the fueling nozzle.

Application
Fueling nozzle for CNG time filling of cars to be used with WEH® Receptacles acc. to NGV1 standard and ISO 14469 (see page 7, compatibility). Operation only by specially trained service personnel. Not for self-service operation!

TECHNICAL DATA

Characteristics	Basic version	
Technical nominal size	4 mm	
Nominal pressure	P30 acc. to ANSI NGV1 / B200 acc. to ISO 14469 PN = 200 bar (3,000 psi)	P36 acc. to ANSI NGV1 / B250 acc. to ISO 14469 PN = 250 bar (3,600 psi)
Max. allowable operating pressure	PS = 300 bar (4,300 psi)	PS = 350 bar (5,000 psi)
Temperature range	-40 °C up to +85 °C (-40 °F up to +185 °F)	
Material	Corrosion resistant	
Sealing material	Natural gas resistant	
Design	With plastic thermal protection	
Weight	Approx. 0.4 kg (0.88 lbs.)	
Conformity / Tests / Approvals	The products comply with ANSI NGV1-2006	

Other designs available on request

» Fueling nozzle **TK1 CNG** for Slow-Fill

ORDERING | WEH® TK1 CNG Fueling nozzle

approx. dimensions (mm)

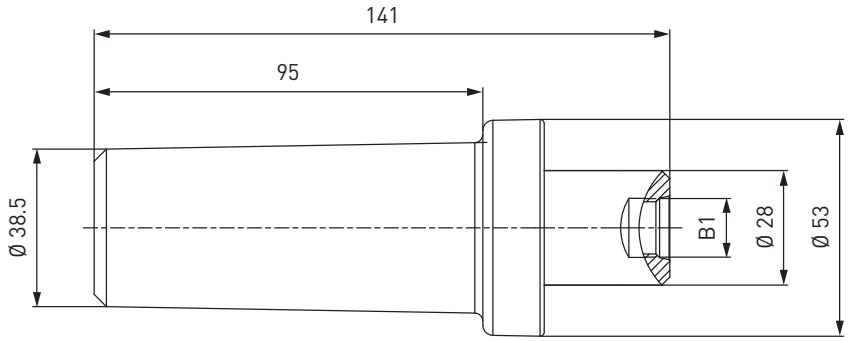

Part No.	Description	Pressure PS	B1 (female thread)
C1-126000-X01	TK1 CNG	300 bar / 4,3000 psi	UNF 9/16"-18*
C1-126001-X01	TK1 CNG	300 bar / 4,3000 psi	UNF 9/16"-18-LH*
C1-126003-X01	TK1 CNG	350 bar / 5,000 psi	UNF 7/16"-20-LH*

* acc. to SAE J1926-1

On request inlet port 'B1' is also available with other thread sizes.

» Fueling nozzle **TK1 CNG** for Slow-Fill

ACCESSORIES

The following accessories are available for the WEH® TK1 CNG Fueling nozzle:

Filter TSF1 CNG (40 µm)

We recommend the installation of a TSF1 CNG filter (see page 94) between the nozzle and the filling hose. The filter protects your system from damage due to dirt ingress.

Part No.	Description	TNW	Pressure PS	B1	B2
C1-100700-X01	TSF1 CNG	8 mm	350 bar / 5,000 psi	UNF 9/16"-18-LH* female thread	UNF 9/16"-18-LH* male thread

* acc. to SAE J1926-1

Filling hoses

Filling hoses for connecting fueling nozzle and dispenser, complete with fittings and press-fittings supported by coil spring stubs.

Part No.	B1/B2 (female thread)	Hose length
E68-1031-3000	UNF 9/16"-18*	3 m
E68-1031-4000	UNF 9/16"-18*	4 m
E68-1031-5000	UNF 9/16"-18*	5 m

* acc. to SAE J514, 37° cone

WEH® breakaway coupling

The appropriate TSA1 CNG and TSA2 CNG breakaway coupling can be found on pages 34 and 38.

Fittings

Stainless steel fittings for connecting port 'B1' to the filling hose.

Part No.	Description	Connection fueling nozzle	Connection filling hose
W6702	Fitting	UNF 9/16"-18** male thread	UNF 9/16"-18* male thread
W6705	Fitting	UNF 9/16"-18** male thread	UNF 7/16"-20* male thread
W6927	Fitting	UNF 9/16"-18** male thread	UNF 7/8"-14* male thread
E80-561P	Fitting	UNF 9/16"-18** male thread	NPT 1/4" male thread
W59695	Fitting	UNF 9/16"-18-LH** male thread	UNF 9/16"-18* male thread

* acc. to SAE J514, 37° cone
** acc. to SAE J1926-1

A detailed overview of all available fittings is available on request.

» Fueling nozzle **TK1 CNG** for Slow-Fill

Spare parts

Various parts are available as spares for the TK1 CNG fueling nozzle.

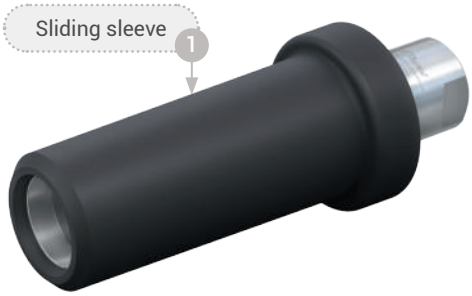

Part No.	Description
W132266	1 Spare parts set 200 bar / 3,000 psi (black sliding sleeve incl. disc and 3 screws)
W132267	1 Spare parts set 250 bar / 3,600 psi (yellow sliding sleeve incl. disc and 3 screws)
On request	Maintenance spray

» Breakaway coupling **TSA1 CNG**

DESCRIPTION

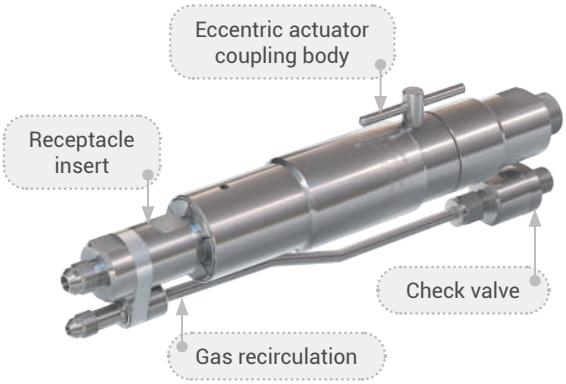

Features
- Re-usable without factory reservicing
- Installation at the dispenser
- Small compact design
- Version with or without gas recirculation
- Integrated cleanable filter (40 µm); optional without filter
- Check valve at venting line
- No additional tool necessary

The type TSA1 CNG breakaway coupling offers additional safety for your car fueling station. The breakaway is installed between the dispenser and the filling/venting hose. In the event of accidental deployment, e.g. driving a vehicle from the dispenser with the nozzle remaining in the vehicle fuel port, the coupling will separate the connections between dispenser and hose sealing both ends. This protects largely the receptacle, the fueling nozzle and the dispenser against damage. The detached coupling can be easily reattached and placed back in service after having been function tested.
We recommend to use breakaways with integrated filter. The filter provides clean natural gas and is easy to maintain.
Of course we also offer breakaway couplings without filter.

The breakaway device consists of a coupling body, a receptacle insert and a gas recirculation with check valve. The breakaway is also available without gas recirculation.

We also offer fueling assemblies consisting of a fueling nozzle, a hose set and a breakaway coupling (for fueling assemblies see respective fueling nozzle).

Application
Breakaway coupling for car fueling stations for installation between the dispenser and the filling/venting hose.

TECHNICAL DATA

Characteristics	Basic version
Technical nominal size	Depending on the version
Nominal pressure	PN = 200 bar (3,000 psi) | PN = 250 bar (3,600 psi)
Max. allowable operating pressure	PS = 300 bar (4,300 psi) | PS = 350 bar (5,000 psi)
Temperature range	-40°C up to +85°C (-40 °F up to +185 °F)
Breakaway force	222 - 660 N
Material	Corrosion resistant stainless steel, aluminum
Sealing material	Natural gas resistant
Design	With gas recirculation and filter (40 µm)

Other designs available on request

» Breakaway coupling **TSA1 CNG**

ORDERING | WEH® TSA1 CNG Breakaway coupling with gas recirculation

approx. dimensions (mm)

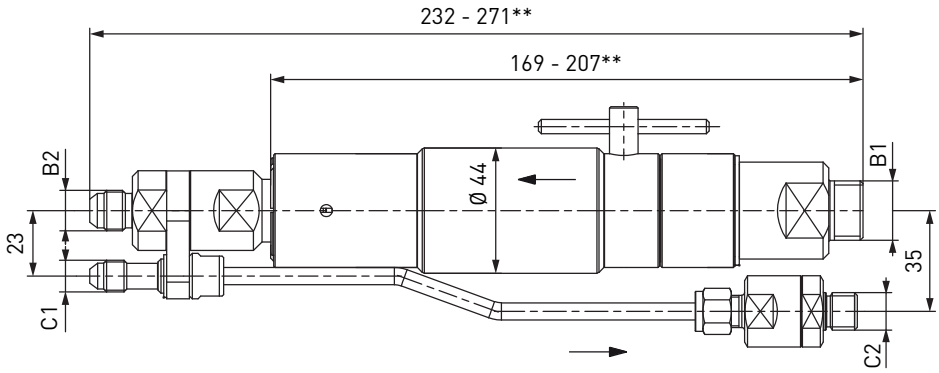

Part No.	Description	TNW	Pressure PS	B1 (male thread)	B2 (male thread)	C1 (male thread)	C2 (male thread)
C1-17195/7-X01	TSA1 CNG with filter	7 mm	300 bar / 4,300 psi	G1/2"	UNF 9/16"-18*	UNF 7/16"-20*	G1/4"
C1-102487	TSA1 CNG with filter	7 mm	350 bar / 5,000 psi	G1/2"	UNF 9/16"-18*	UNF 7/16"-20*	G1/4"
C1-101108-X01	TSA1 CNG with filter	4 mm	300 bar / 4,300 psi	G1/2"	UNF 7/16"-20*	UNF 7/16"-20*	G1/4"

* acc. to SAE J514, 37° cone
** length depending on type of breakaway coupling

ORDERING | WEH® TSA1 CNG Breakaway coupling without gas recirculation

approx. dimensions (mm)

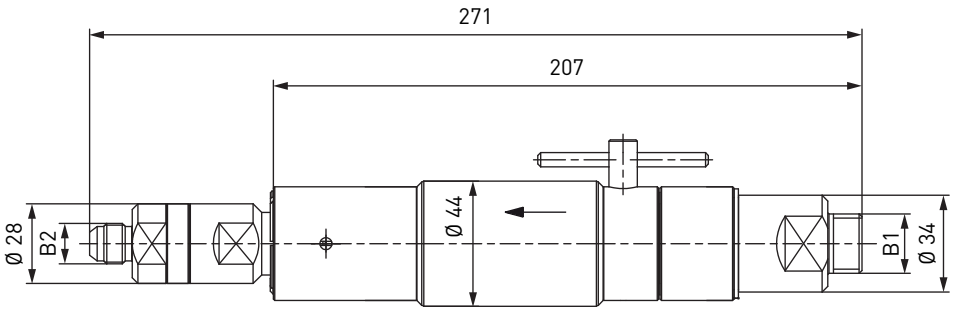

Part No.	Description	TNW	Pressure PS	B1 (male thread)	B2 (male thread)
C1-17197-X3-X01	TSA1 CNG with filter	7 mm	300 bar / 4,300 psi	G1/2"	UNF 9/16"-18*

* acc. to SAE J514, 37° cone

» Breakaway coupling **TSA1 CNG**

ACCESSORIES

The following accessories are available for the WEH® TSA1 CNG Breakaway coupling:

Dispenser mounting

The breakaway coupling can also be used in combination with a mounting. The mounting is mounted on the dispenser. A guide tube is integrated into the bracket, which ensures a straight pull force regardless of the direction of pull.

Dispenser mounting for fueling nozzles without data interface

approx. dimensions (mm)

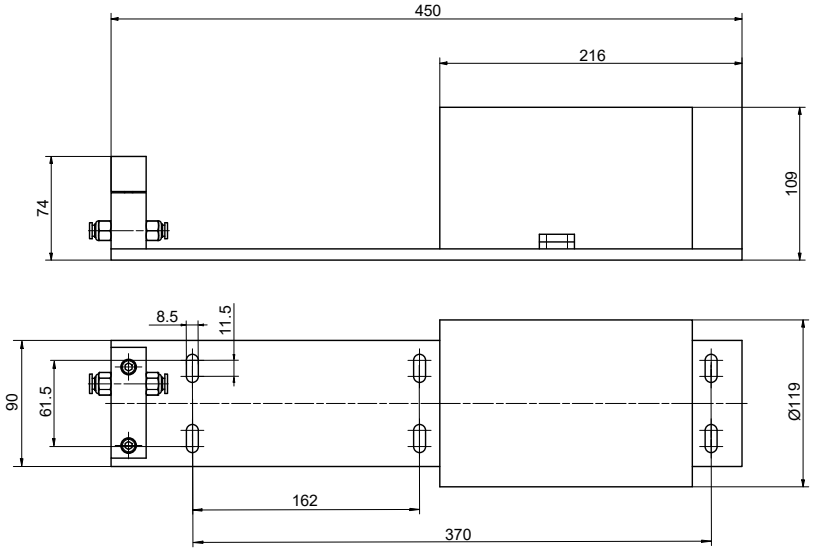

Part No.	Description
C1-191133	Dispenser mounting for TSA1 CNG for fueling nozzles without data interface

Hoses

Please see page 124 or the corresponding fueling nozzles for filling and venting hoses suitable for the TSA1 CNG breakaway coupling.

» Breakaway coupling **TSA1 CNG**

Fittings

Stainless steel fittings for connecting port 'B1' to the filling hose or port 'C2' to the venting hose.

Part No.	Description	Connection breakaway	Connection filling hose
E80-79538	Fitting	UNF 9/16"-18* female thread	UNF 9/16"-18** female thread
E80-647P	Fitting	UNF 9/16"-18* female thread	UNF 7/8"-14* male thread
E80-60018	Fitting	UNF 9/16"-18* male thread	G3/8" male thread

* acc. to SAE J514, 37° cone
** acc. to SAE J1926-1

A detailed overview of all available fittings is available on request.

Spare parts

Various parts are available as spares for the TSA1 CNG breakaway coupling.

Part No.	Description
W56149	Receptacle insert for UNF 9/16"-18 male thread, 37° (B2), UNF 7/16"-20 male thread, 37° (C1)
W101086	Receptacle insert for UNF 7/16"-20 male thread, 37° (B2), UNF 7/16"-20 male thread, 37° (C1)
W60006	Receptacle insert for UNF 9/16"-18 male thread, 37° (B2)
B200B-119056	Spare seal set for receptacle insert W56149 and W101086
B200B-119054	Spare seal set for receptacle insert W60006
E69-9061	Wire filter insert 40 µm (incl. spring and back-up ring)
W139032	Spare part set consisting of a gas recirculation tube (length: approx. 195 mm) and a firmly mounted check valve for G1/4" male thread (C2)
W139315	Spare part set consisting of a gas recirculation tube (length: approx. 157 mm) and a firmly mounted check valve for G1/4" male thread (C2)

» Inline breakaway coupling **TSA2 CNG**

DESCRIPTION

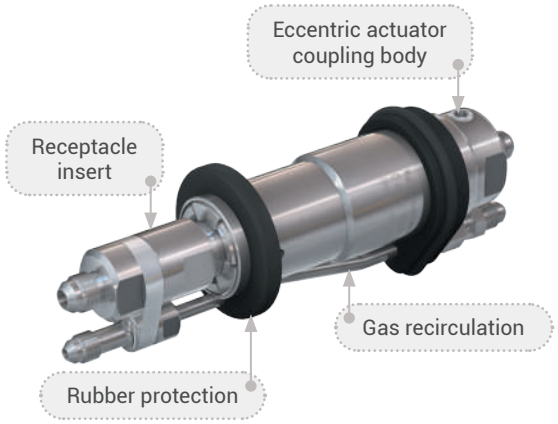

Features
- Re-usable without factory reservicing
- Installation inbetween the filling and venting hoses
- Small compact design
- Version with or without gas recirculation
- Rubber protection
- Eccentric actuation via an allen wrench

With type TSA2 CNG, an inline breakaway coupling which is installed inbetween the filling and venting hoses, is now also available for car fueling stations. In the event of accidental deployment, e.g. driving a vehicle from the dispenser with the nozzle remaining in the vehicle fuel port, the coupling will separate the connections between dispenser and hoses sealing both ends. This protects largely the receptacle, the fueling nozzle and the dispenser against damage. The detached coupling can be easily reattached and placed back in service after having been function tested.

The breakaway device consists of a coupling body, a receptacle insert and an optional gas recirculation.

We recommend the installation of a TSF5 CNG filter (see page 108) when using the TSA2 CNG inline breakaway coupling. The filter protects your system from dirt ingress.

We also offer fueling assemblies consisting of a fueling nozzle, a hose set and a breakaway coupling (for fueling assemblies see respective fueling nozzle).

Application
Inline breakaway coupling for car fueling stations for installation inbetween the filling and venting hoses.

TECHNICAL DATA

Characteristics	Basic version
Technical nominal size	Depending on design
Nominal pressure	PN = 200 bar (3,000 psi) | PN = 250 bar (3,600 psi)
Max. allowable operating pressure	PS = 300 bar (4,300 psi) | PS = 350 bar (5,000 psi)
Temperature range	-40°C up to +85°C (-40 °F up to +185 °F)
Breakaway force	222 - 660 N
Material	Corrosion resistant stainless steel, aluminum
Sealing material	Natural gas resistant
Design	With gas recirculation

Other designs available on request

» Inline breakaway coupling **TSA2 CNG**

ORDERING | WEH® TSA2 CNG Inline breakaway coupling with gas recirculation

approx. dimensions (mm)

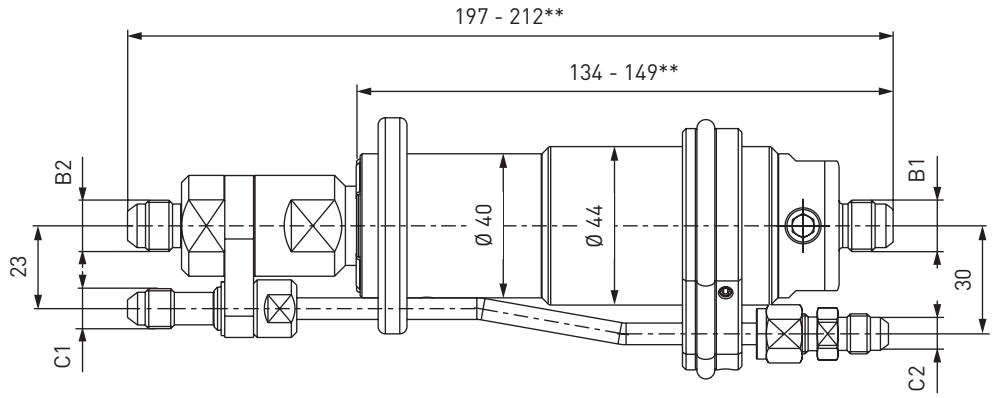

Part No.	Description	TNW	Pressure PS	B1/B2 (male thread)	C1/C2 (male thread)
C1-60003-X1-X01	TSA2 CNG	7 mm	300 bar / 4,300 psi	UNF 9/16"-18*	UNF 7/16"-20*
C1-101094-X01	TSA2 CNG	7 mm	350 bar / 5,000 psi	UNF 9/16"-18*	UNF 7/16"-20*
C1-92668-X01	TSA2 CNG	4 mm	300 bar / 4,300 psi	UNF 7/16"-20*	UNF 7/16"-20*

* acc. to SAE J514, 37° cone
** length depending on type of breakaway coupling

ORDERING | WEH® TSA2 CNG Inline breakaway coupling without gas recirculation

approx. dimensions (mm)

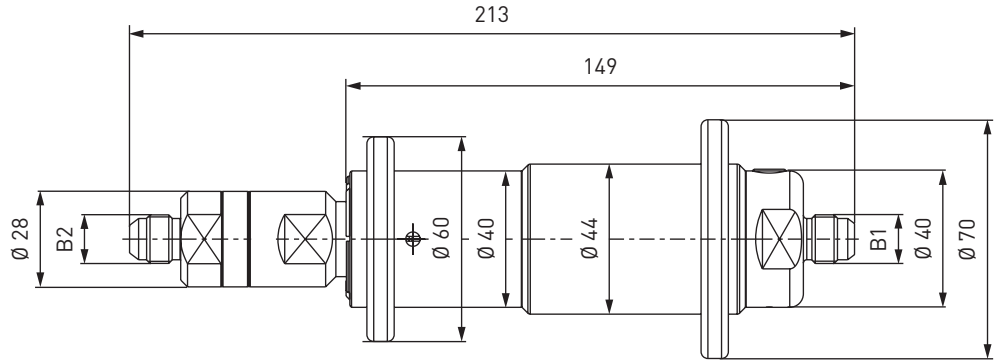

Part No.	Description	TNW	Pressure PS	B1 (male thread)	B2 (male thread)
C1-60007-X1-X01	TSA2 CNG	7 mm	300 bar / 4,300 psi	UNF 9/16"-18*	UNF 9/16"-18*
C1-101042-X01	TSA2 CNG	7 mm	350 bar / 5,000 psi	UNF 9/16"-18*	UNF 9/16"-18*
C1-74443-X01	TSA2 CNG	4 mm	300 bar / 4,300 psi	UNF 9/16"-18*	UNF 7/16"-20*
C1-103076-X01	TSA2 CNG	4 mm	300 bar / 4,300 psi	UNF 7/16"-20*	UNF 7/16"-20*

* acc. to SAE J514, 37° cone

» Inline breakaway coupling **TSA2 CNG**

ACCESSORIES

The following accessories are available for the WEH® TSA2 CNG Inline breakaway coupling:

Filter TSF5 CNG (50 µm)

For upgrading existing inline breakaways without integrated filter, we recommend the installation of a TSF5 CNG filter (see page 108). The filter protects your system from dirt ingress. The TSF5 CNG is installed as prefilter in the media inlet between inline breakaway coupling and filling hose.

Part No.	Description	TNW	Pressure PS	B1	B2
C1-83120-X01	TSF5 CNG	8 mm	300 bar / 4,300 psi	UNF 9/16"-18* male thread	UNF 9/16"-18* female thread
C1-102491-X01	TSF5 CNG	8 mm	350 bar / 5,000 psi	UNF 9/16"-18* male thread	UNF 9/16"-18* female thread

* acc. to SAE J514, 37° cone

Hoses

Please see page 124 or the corresponding fueling nozzles for filling and venting hoses suitable for the TSA2 CNG inline breakaway coupling.

Fittings

Stainless steel fittings for connecting port 'B1' to the filling hose or port 'C2' to the venting hose.

Part No.	Description	Connection breakaway	Connection filling hose
E80-79538	Fitting	UNF 9/16"-18* female thread	UNF 9/16"-18** female thread
E80-66850	Fitting	UNF 9/16"-18* female thread	UNF 3/4"-16* male thread
E80-65592	Fitting	UNF 9/16"-18* female thread	NPT 1/4" female thread

* acc. to SAE J514, 37° cone
** acc. to SAE J1926-1

A detailed overview of all available fittings is available on request.

» Inline breakaway coupling **TSA2 CNG**

Spare parts

Various parts are available as spares for the TSA2 CNG inline breakaway coupling.

TSA2 CNG without gas recirculation

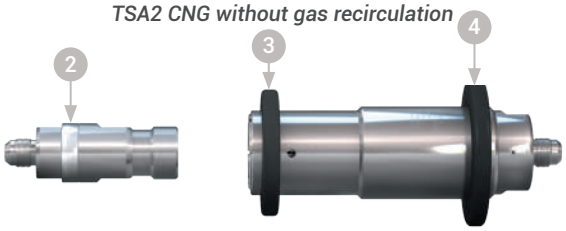

TSA2 CNG with gas recirculation

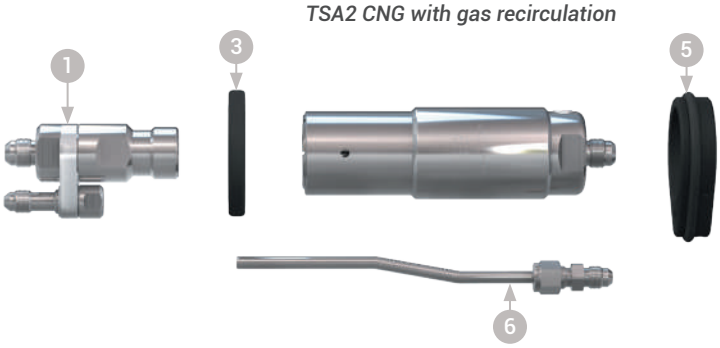

Part No.	Description
W56149	1 Receptacle insert for UNF 9/16"-18 male thread, 37° (B2), UNF 7/16"-20 male thread, 37° (C1)
W101086	1 Receptacle insert for UNF 7/16"-20 male thread, 37° (B2), UNF 7/16"-20 male thread, 37° (C1)
W60006	2 Receptacle insert for UNF 9/16"-18 male thread, 37° (B2)
W74608	2 Receptacle insert for UNF 7/16"-20 male thread, 37° (B2)
B200B-119056	Spare seal set for receptacle insert W56149 and W101086
B200B-119054	Spare seal set for receptacle insert W60006 and W74608
E80-71324	3 Front rubber protection
E80-71325	4 Rear rubber protection
W150599	5 Mounting flange incl. impact protection
W139030	6 Spare part set consisting of a gas recirculation tube and a firmly mounted fitting for UNF 7/16"-20 male thread, 37° (C2)

» Receptacle **TN1 CNG**

DESCRIPTION

Features
- Compatible with fueling nozzles acc. to NGV1 standard and ISO 14469 (see page 7, compatibility)
- Low-noise refueling
- Integrated self-cleaning particle filter (40 µm)
- Integrated high-flow check valve
- Sealing-friendly design
- Coding for pressure range / gas type

The WEH® TN1 CNG receptacle is designed specifically for CNG refueling. Due to the internal aerodynamic design the TN1 CNG receptacle gives low noise (no high frequency whistle) combined with maximum flow rate and fast filling. The receptacle is a very durable unit, minimizing maintenance and down-time. The type TN1 CNG also has an integrated check valve system which is designed to minimize the effect that dirt particles have on the sealing components within the receptacle. The TN1 CNG receptacle is equipped with a coding for pressure range and gas type.

Enhanced safety by integrating a dirt particle filter
Using an integrated particle filter avoids dirt ingress and therefore leakage from the receptacle which gives enhanced safety and reliability - essential features for the volatile nature of CNG products.

Application
Receptacle for CNG refueling / filling of cars and fork-lift trucks or other industrial applications, to be used with WEH® Fueling nozzles acc. to NGV1 standard and ISO 14469 (see page 7, compatibility).
Only use receptacles with ECE approval for fitment in road legal vehicles.

TECHNICAL DATA

Characteristics	Basic version
Technical nominal size	Depending on design
Nominal pressure	PN = 200 bar (3,000 psi) PN = 250 bar (3,600 psi)
Max. allowable operating pressure	PS = 260 bar (ECE) (3,700 psi) | PS = 315 bar (4,500 psi)
Temperature range	-40 °C up to +120 °C (-40 °F up to +248 °F) (ECE) -40 °C up to +85 °C (-40 °F up to +185 °F)
Material	Corrosion resistant
Sealing material	Natural gas resistant
Design	With protection cap, integrated particle filter (40 µm) and fittings (only for receptacles with tube fitting)
Conformity / Tests / Approvals	ECE R110

Other designs available on request

» Receptacle **TN1 CNG**

ORDERING | WEH® TN1 CNG Receptacle with tube fitting and filter (40 µm)

approx. dimensions (mm)

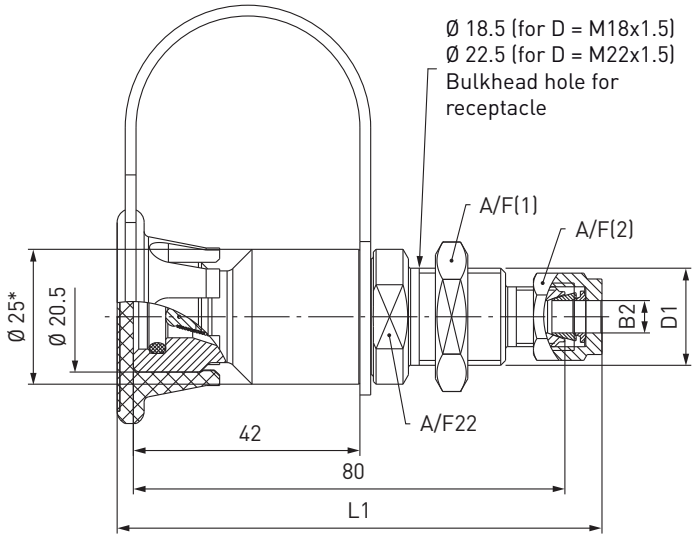

Part No.	Description	TNW**	Pressure PS	B2***	L1	D1	A/F(1)	A/F(2)
C1-99331	TN1 CNG (ECE)	5 mm	260 bar / 3,700 psi	Tube Ø 6	90	M18x1.5	24	14
C1-105789	TN1 CNG (ECE)	5 mm	260 bar / 3,700 psi	Tube Ø 1/4"	90	M18x1.5	24	14
C1-106400	TN1 CNG (ECE)	6 mm	260 bar / 3,700 psi	Tube Ø 8	90	M18x1.5	24	16
C1-106401	TN1 CNG (ECE)	6 mm	260 bar / 3,700 psi	Tube Ø 10	91	M18x1.5	24	19
C1-105939	TN1 CNG (ECE)	6 mm	260 bar / 3,700 psi	Tube Ø 12	92	M22x1.5	27	22
C1-102580*	TN1 CNG	6 mm	315 bar / 4,500 psi	Tube Ø 1/2"	94	M22x1.5	27	22

* Different diameter (Ø 24 mm) due to pressure range coding
** depending on inner diameter of tube
*** double ferrule fitting

» Receptacle **TN1 CNG**

ORDERING | WEH® TN1 CNG Receptacle with female thread and filter (40 µm)

approx. dimensions (mm)

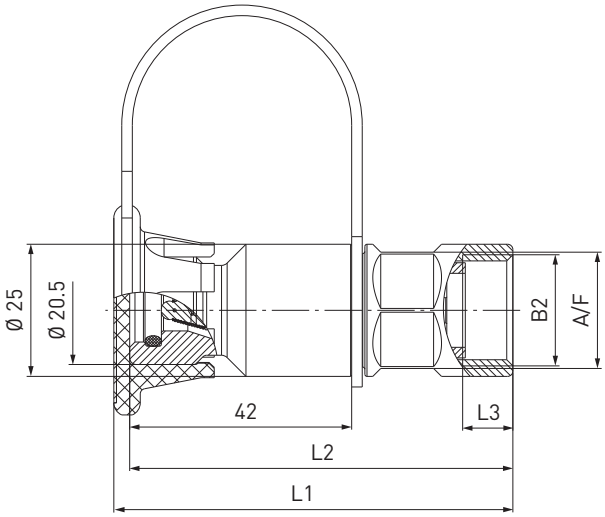

Part No.	Description	TNW	Pressure PS	B2 (female thread)	L1	L2	L3	A/F
C1-92149	TN1 CNG (ECE)	5 mm	260 bar / 3,700 psi	G1/2"	75.5	72.5	9.5	22

* acc. to SAE J1926-1

ORDERING | WEH® TN1 CNG Receptacle with female thread (without filter)

approx. dimensions (mm)

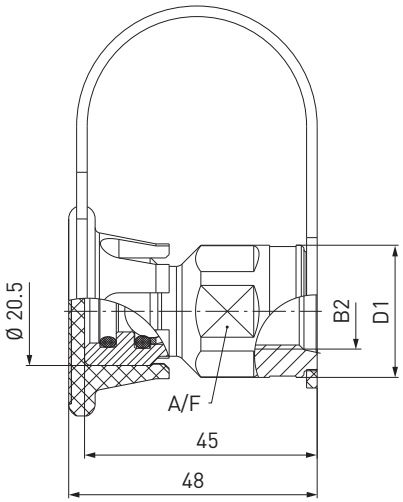

Part No.	Description	TNW	Pressure PS	B2 (female thread)	D1	A/F
C1-101122	TN1 CNG (ECE)	6 mm	260 bar / 3,700 psi	UNF 9/16"-18*	25	23
C1-33505-X01	TN1 CNG	6 mm	260 bar / 3,700 psi	UNF 9/16"-18*	24	22

* acc. to SAE J1926-1

Other connection sizes on request.

Receptacle **TN1 CNG**

SPARE PARTS

Various parts are available as spares for the WEH® TN1 CNG Receptacle:

Protection Cap

Protection cap with a strap to protect the receptacle from dirt ingress.

Part No.	Description
E80-68966	Protection cap

» Fueling system **TS50 CNG**

DESCRIPTION

Features
- Integrated WEH® TN1 CNG receptacle (NGV1) with filter
- Integrated starter cut-off micro switch (version 1)
- Gas venting via protection hose (version 1 + 2)
- Different fuel tank caps, acc. to design
- Protection against unauthorized use (version 1)
- Dirt and splash waterproof construction
- No danger of freezing

WEH offers the fueling system type TS50 CNG for retrofitting of vehicles to run on compressed natural gas. The TS50 CNG fueling system is a CNG conversion kit for quick and easy installation into the vehicle. The two housings can be preinstalled within seconds. The final installation is possible from the inside or outside of the vehicle. The type TS50 CNG is equipped with a receptacle with filter compatible with the NGV1 profile. Version 1 have a starter cut-off micro switch. The micro switch interrupts the starter operation and prevents the vehicle from driving off during refueling. Version 1 and 2 are additionally equipped with a protection hose for gas venting. In case of a gas leakage the gas is diverted away from the connection.
The interior of the fueling system is protected by a fuel tank cap from dirt and splash water thus reducing the danger of freezing.

On request type TS50 CNG is also available without tube for protection hose for gas venting and without starter cut-off micro switch.

Application
Fueling system for installation in cars.
Only use fueling systems with ECE approval for fitment in road legal vehicles.

TECHNICAL DATA

Characteristics	Basic version
Nominal pressure	PN = 200 bar (3,000 psi)
Max. allowable operating pressure	PS = 260 bar (ECE) (3,700 psi)
Temperature range	-40 °C up to +120 °C (-40 °F up to +248 °F) (ECE)
Material	Housing: plastic Receptacle: corrosion resistant
Sealing material	Natural gas resistant
Design	Incl. TN1 CNG receptacle with filter (40 µm), starter cut-off micro switch (protection type IP67), tube for protection hose for gas venting, fuel tank cap and fittings
Conformity / Tests / Approvals	ECE R110 (applies to TN1 CNG)

Other designs available on request

» Fueling system **TS50 CNG**

OVERVIEW TYPES TS50 CNG

For the TS50 CNG fueling system several designs are available:

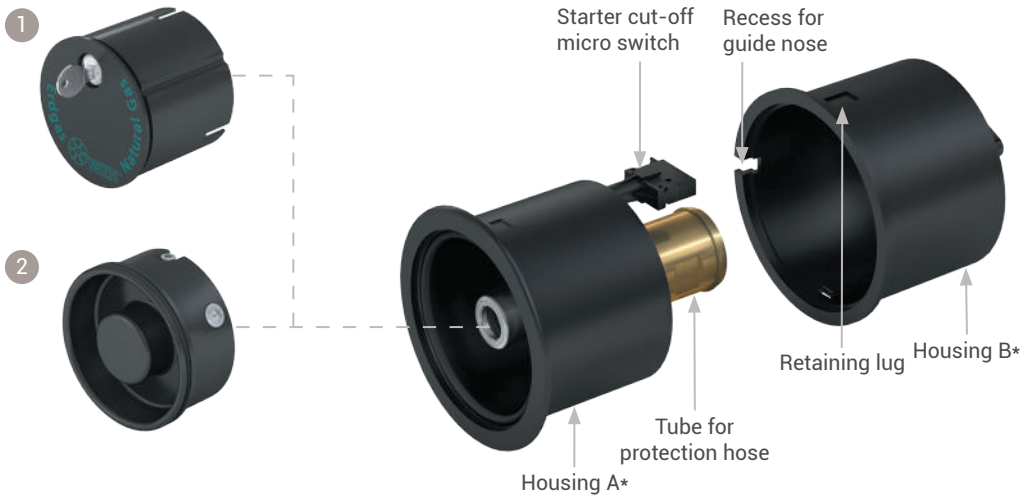

* Housing A/B may differ with version 2

1 TS50 CNG with lockable fuel tank cap and key (version 1)

To prevent unauthorized use, the fueling system is equipped with a lockable fuel tank cap.

2 TS50 CNG with cap, without lock and starter cut-off micro switch (version 2)

The TS50 CNG is also available without lock. The fuel tank cap protects the interior of the fueling system from dirt and splash water and reduces the danger of freezing.

» Fueling system **TS50 CNG**

ORDERING | WEH® TS50 CNG Fueling system with lockable fuel tank cap and 2 keys (version 1)

approx. dimensions (mm)

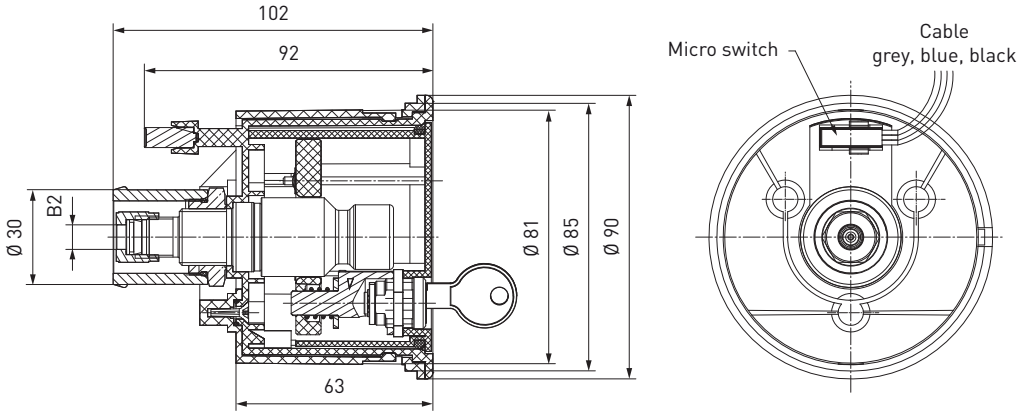

Cable: grey = N/C | blue = N/O | black = inlet port

Part No.	Description	TNW**	Pressure PS	B2
C1-106406	TS50 CNG (ECE)	5 mm	260 bar / 3,700 psi	Tube Ø 6*
C1-106413	TS50 CNG (ECE)	5 mm	260 bar / 3,700 psi	Tube Ø 1/4"*
C1-106410	TS50 CNG (ECE)	6 mm	260 bar / 3,700 psi	Tube Ø 8*
C1-106414	TS50 CNG (ECE)	8 mm	260 bar / 3,700 psi	Tube Ø 3/8"*
C1-106415	TS50 CNG (ECE)	8 mm	260 bar / 3,700 psi	Tube Ø 10*

* double ferrule fitting
** Depending on the inner diameter of the pipe

ORDERING | WEH® TS50 CNG Fueling system with fuel tank cap, without starter cut-off micro switch (version 2)

approx. dimensions (mm)

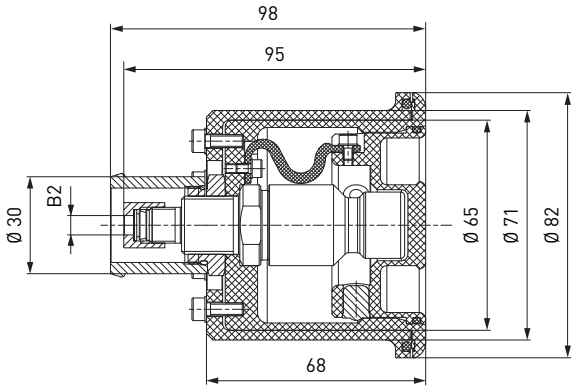

Part No.	Description	Pressure PS	B2
C1-106416	TS50 CNG (ECE)	260 bar / 3,700 psi	Tube Ø 6*
C1-106417	TS50 CNG (ECE)	260 bar / 3,700 psi	Tube Ø 8*
C1-106418	TS50 CNG (ECE)	260 bar / 3,700 psi	Tube Ø 10*

* double ferrule fitting

SPARE PARTS

Certain parts are available as spares for the WEH® TS50 CNG Fueling system:

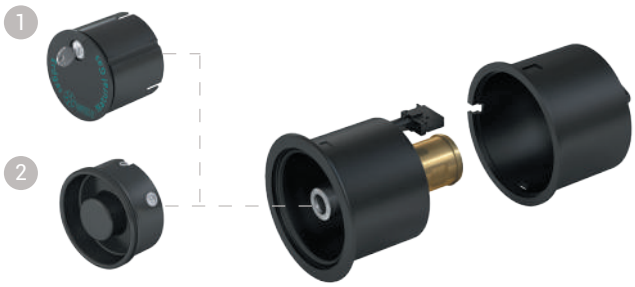

Part No.	Description
W6931	1 Fuel tank cap with marking incl. 2 keys (version 1)
W35528	2 Pull-out fuel tank cap (version 2)

» Check valve **TVR1 CNG**

DESCRIPTION

Features
- Robust construction
- Low-noise opening and closing
- Corrosion resistant stainless steel
- High leak tightness

With the type TVR1 CNG WEH offers a high performance check valve for use with natural gas. The check valve system is designed to minimize the effect of dirt particles on the sealing components within the unit. The WEH® TVR1 CNG check valve is constructed of corrosion-resistant stainless steel achieving a very durable unit due to its robust internal structure.

Application
Check valve for cars (ECE approval), also suitable for installation in fueling stations.
Only use check valves with ECE approval for fitment in road legal vehicles.

TECHNICAL DATA

Characteristics	Basic version
Technical nominal size	Depending on design (8 mm max.)
Nominal pressure	PN = 200 bar (3,000 psi) | PN = 250 bar (3,600 psi)
Max. allowable operating pressure	PS = 260 bar (ECE) (3,700 psi) | PS = 315 bar (4,500 psi)
Temperature range	-40°C up to +120°C (-40 °F up to +248 °F) (ECE) -40°C up to +85°C (-40 °F up to +185 °F)
Material	Corrosion resistant stainless steel
Sealing material	Natural gas resistant
Design	Incl. fittings (only for check valves with tube fitting)
Conformity / Tests / Approvals	ECE R110

Other designs available on request

» Check valve **TVR1 CNG**

ORDERING | WEH® TVR1 CNG Check valve with tube fitting on both sides

approx. dimensions (mm)

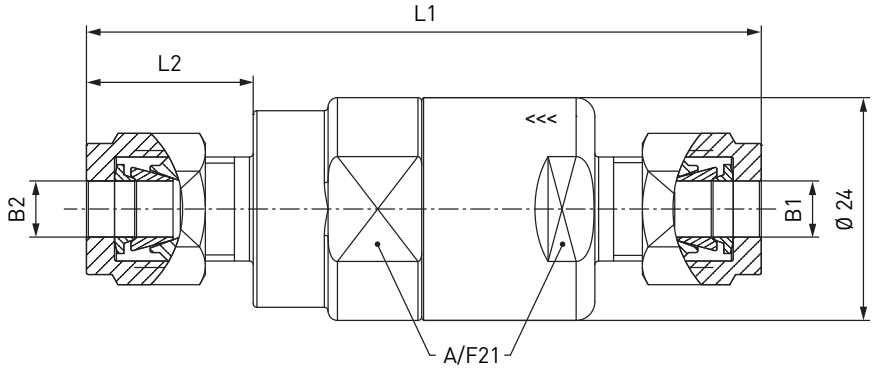

Part No.	Description	TNW**	Pressure PS	B1	B2	L1	L2
C1-105917	TVR1 CNG (ECE)	5 mm	260 bar / 3,700 psi	Tube Ø 6*	Tube Ø 6*	72	18
C1-106982-X01	TVR1 CNG	5 mm	315 bar / 4,500 psi	Tube Ø 6*	Tube Ø 6*	72	18
C1-102597-X01	TVR1 CNG	5 mm	315 bar / 4,500 psi	Tube Ø 1/4"*	Tube Ø 1/4"*	73	18
C1-106451	TVR1 CNG (ECE)	6 mm	260 bar / 3,700 psi	Tube Ø 8*	Tube Ø 8*	75	20
C1-106983-X01	TVR1 CNG	6 mm	315 bar / 4,500 psi	Tube Ø 8*	Tube Ø 8*	75	20
C1-106452	TVR1 CNG (ECE)	6 mm	260 bar / 3,700 psi	Tube Ø 10*	Tube Ø 10*	77	20
C1-106984	TVR1 CNG	6 mm	315 bar / 4,500 psi	Tube Ø 10*	Tube Ø 10*	77	20
C1-106453	TVR1 CNG (ECE)	6 mm	260 bar / 3,700 psi	Tube Ø 12*	Tube Ø 12*	81	22
C1-106985-X01	TVR1 CNG	8 mm	315 bar / 4,500 psi	Tube Ø 12*	Tube Ø 12*	81	22

* double ferrule fitting

» Fueling nozzle **TK26 CNG**

DESCRIPTION

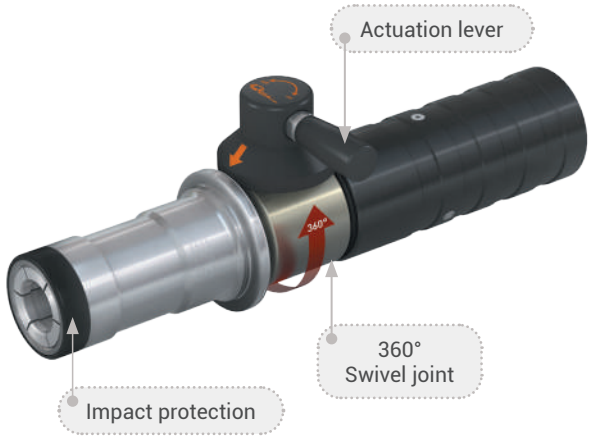

Features
- Super light ➡ only 3400 grams
- Compatible with receptacles acc. to NGV1 standard and ISO 14469 (see page 7, compatibility)
- WEH® EASY-TURN 360° swivel joint for actuation lever
- Easy operation
- Extremely high flow rate ➡ short filling times
- Recirculation of the vented gas
- Plastic thermal protection
- WEH® Jaw locking mechanism
- Colour coded impact protection (200 bar / 3,000 psi black, 250 bar / 3,600 psi yellow)
- High-grade materials
- Coding for pressure range / gas type

The TK26 CNG fueling nozzle is very light in weight and therefore easy to operate. The integrated swivel joint is located at the actuation lever and can easily be turned into the optimal actuating position. The compact actuation lever needs less effort to actuate the nozzle.

Safety
The TK26 CNG offers optimum safety to the operator.
The fueling nozzle remains connected to the receptacle until the gas between inlet valve and receptacle is depressurized.

Application
Fueling nozzle for CNG fast filling of buses and trucks at self-service fueling stations to be used with WEH® Receptacles acc. to NGV1 standard and ISO 14469 (see page 7, compatibility).

TECHNICAL DATA

Characteristics	Basic version	
Technical nominal size	12 mm	
Coding	P30HD acc. to ANSI NGV1 / C200 acc. to ISO 14469 PN = 200 bar (3,000 psi)	P36HD acc. to ANSI NGV1 / C250 acc. to ISO 14469 PN = 250 bar (3,600 psi)
Max. allowable operating pressure	PS = 300 bar (4,300 psi)	PS = 350 bar (5,000 psi)
Temperature range	-40 °C up to +85 °C (-40 °F up to +185 °F)	
Material	Corrosion resistant	
Sealing material	Natural gas resistant	
Design	With plastic thermal protection and gas recirculation	
Weight	Approx. 3.4 kg (7.50 lbs.)	
Conformity / Tests / Approvals	In accordance with ISO 14469	

Other designs available on request

» Fueling nozzle **TK26 CNG**

ORDERING | WEH® TK26 CNG Fueling nozzle

approx. dimensions (mm)

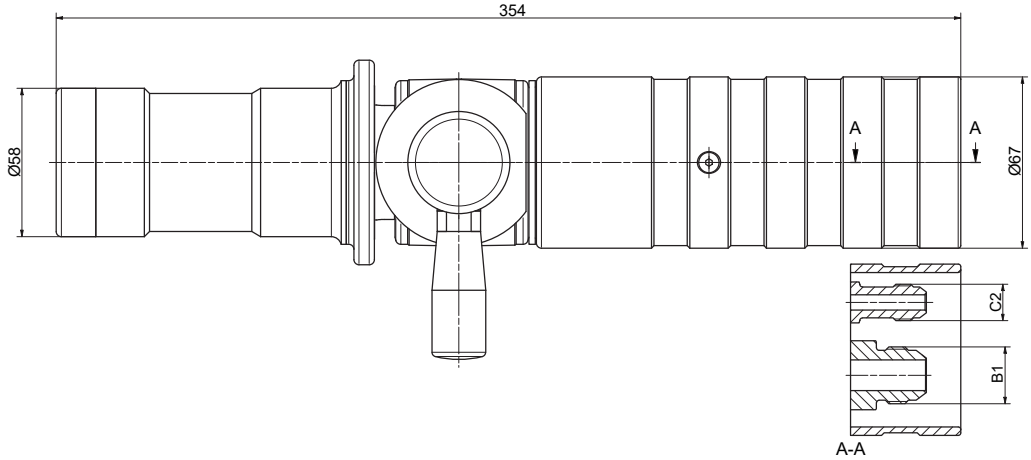

Part No.	Description	Pressure PS	B1 (male thread)	C2 (male thread)
C1-70708-X01	TK26 CNG	300 bar / 4,300 psi	UNF 7/8"-14*	UNF 9/16"-18*
C1-102475-X01	TK26 CNG	350 bar / 5,000 psi	UNF 7/8"-14*	UNF 9/16"-18*

* acc. to SAE J514, 37° cone

Please see page 54 an 55 onwards for fueling assemblies consisting of fueling nozzle, hose set and breakaway coupling.

ACCESSORIES

The following accessories are available for the WEH® TK26 CNG Fueling nozzle:

Dispenser mounting

Mounting for safe attachment of the fueling nozzle to the dispenser. Optionally with or without switch actuation.
Design: Aluminum, stainless steel

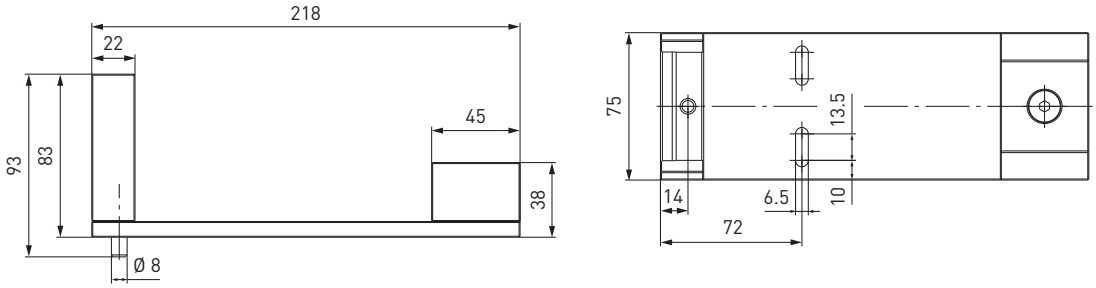

Part No.	Description
C1-94805	Dispenser mounting (switch actuated)
C1-117370	Dispenser mounting (not switch actuated)

» Fueling nozzle **TK26 CNG**

Hose sets TK26 CNG - TSA5 CNG

Filling and venting hoses for connecting fueling nozzle and TSA5 CNG breakaway coupling, complete with fittings and press-fittings supported by coil spring stubs. Available as single or twin hoses (permanently bonded).

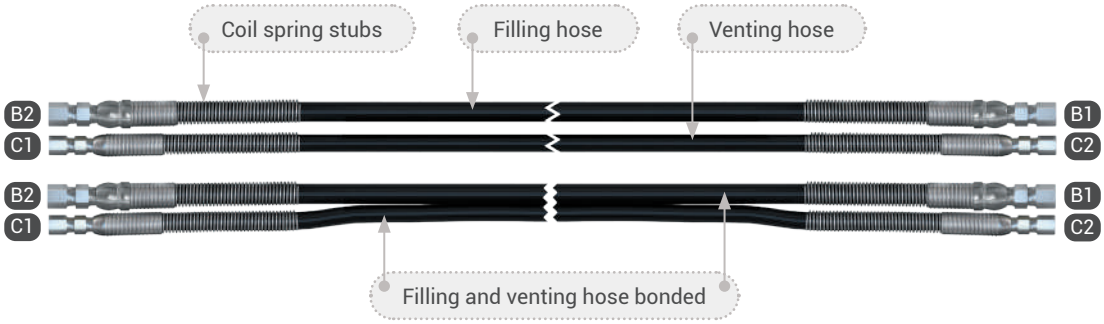

Part No.	B1/B2 (female thread)	C1/C2 (female thread)	Hose length
C1-101749	UNF 7/8"-14*	UNF 9/16"-18*	3 m
C1-102079	UNF 7/8"-14*	UNF 9/16"-18*	4 m
C1-102508	UNF 7/8"-14*	UNF 9/16"-18*	5 m

* acc. to SAE J514, 37° cone
All designs also available with permanently bonded filling and venting hose. Please contact us!

Hose sets TK26 CNG - TSA6 CNG

Filling and venting hoses for connecting fueling nozzle / dispenser and TSA6 CNG inline breakaway coupling, complete with fittings and press-fittings supported by coil spring stubs.

Part No.	B1/B2 (female thread)	C1/C2 (female thread)	Hose length
On request	UNF 7/8"-14*	UNF 9/16"-18*	2.5 | 0.5 m
On request	UNF 7/8"-14*	UNF 9/16"-18*	3.5 | 0.5 m
On request	UNF 7/8"-14*	UNF 9/16"-18*	4.5 | 0.5 m

* acc. to SAE J514, 37° cone
All designs also available with permanently bonded filling and venting hose. Please contact us!

ORDERING | Fueling assembly WEH® TK26 CNG with WEH® TSA5 CNG Breakaway coupling

Complete fueling assembly consisting of a TK26 CNG (200 bar / 3,000 psi) fueling nozzle, a hose set and a TSA5 CNG breakaway coupling (with 40 µm filter).

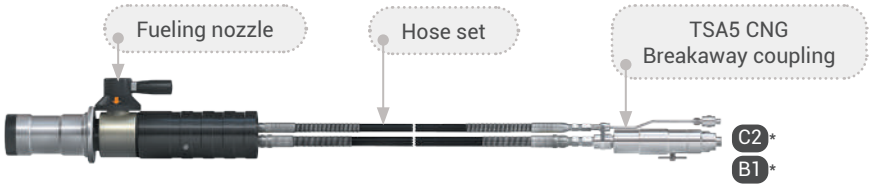

Part No.	Description	Hose length
C1-101917-X01	Fueling assembly with TSA5 CNG breakaway coupling	3 m
C1-106459-X01	Fueling assembly with TSA5 CNG breakaway coupling	4 m
C1-106460-X01	Fueling assembly with TSA5 CNG breakaway coupling	5 m

All designs are also available with a TK26 CNG - 250 bar (3,600 psi) fueling nozzle or with permanently bonded filling and venting hose. Please contact us!
* For connection sizes 'B1' and 'C2' see page 64, TSA5 CNG breakaway coupling.

» Fueling nozzle **TK26 CNG**

ORDERING | Fueling assembly WEH® TK26 CNG with WEH® TSA6 CNG Inline breakaway coupling

Complete fueling assembly consisting of a TK26 CNG (200 bar / 3,000 psi) fueling nozzle, a hose set and a TSA6 CNG inline breakaway coupling.

Part No.	Description	Hose length
C1-106464-X01	Fueling assembly with TSA6 CNG inline breakaway coupling	2.5 | 0.5 m
C1-106466-X01	Fueling assembly with TSA6 CNG inline breakaway coupling	3.5 | 0.5 m
C1-106467-X01	Fueling assembly with TSA6 CNG inline breakaway coupling	4.5 | 0.5 m

All designs are also available with a TK26 CNG - 250 bar (3,600 psi) fueling nozzle or with permanently bonded filling and venting hose. Please contact us!
* For connection sizes 'B1' and 'C2' see page 124, TK26 CNG hose set.

Spare parts

Various parts are available as spares for the TK26 CNG fueling nozzle.

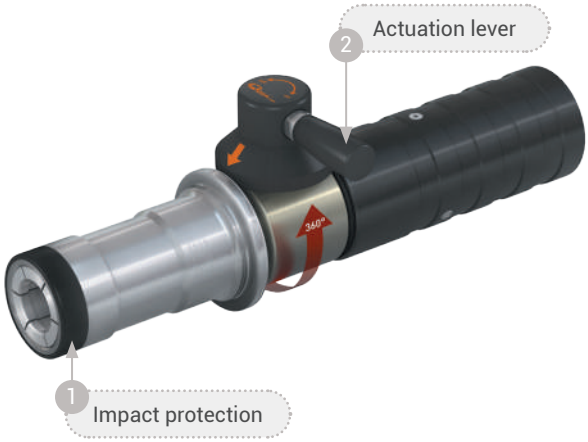

Part No.	Description
E80-94808	1 Impact protection 200 bar / 3,000 psi (black)
E80-106832	1 Impact protection 250 bar / 3,600 psi (yellow)
W72504	2 Actuation lever
On request	Maintenance spray

» Fueling nozzle **TK22 CNG**

DESCRIPTION

Features
- Compatible with receptacles acc. to NGV1 standard and ISO 14469 (see page 7, compatibility)
- Push-Pull actuation
- Extremely high flow rate
- Integrated shut-off valve
- Plastic thermal protection
- WEH® Jaw locking mechanism
- Colour coded impact protection (200 bar / 3,000 psi black, 250 bar / 3,600 psi yellow)
- High-grade materials
- Compact design
- Retrofitting of safety device for grip sleeve at any time

Type TK22 CNG is the WEH® Fueling nozzle for CNG refueling of buses and trucks. The compact design and the unique WEH® Jaw locking mechanism provide a pressure-tight connection within seconds.

The type TK22 CNG can be used wherever the system is pressurized and vented at the fueling station. Easy push-pull connection. The nozzle only has to be placed onto the receptacle and the clamping jaws close. Disconnection is effected by pulling back the grip sleeve.

TK22 CNG with safety device for grip sleeve

Application
Fueling nozzle for CNG fast filling of buses and trucks to be used with WEH® Receptacles acc. to NGV1 standard and ISO 14469 (see page 7, compatibility). Operation only by specially trained service personnel. Not for self-service operation! For self-service operation we recommend our TK22 CNG with safety device for grip sleeve.

TECHNICAL DATA

Characteristics	Basic version	
Technical nominal size	12 mm	
Nominal pressure	P30HD acc. to ANSI NGV1 / C200 acc. to ISO 14469 PN = 200 bar (3,000 psi)	P36HD acc. to ANSI NGV1 / C250 acc. to ISO 14469 PN = 250 bar (3,600 psi)
Max. allowable operating pressure	PS = 300 bar (4,300 psi)	PS = 350 bar (5,000 psi)
Temperature range	-40°C up to +85°C (-40 °F up to +185 °F)	
Material	Corrosion resistant	
Sealing material	Natural gas resistant	
Design	With plastic thermal protection	
Weight	Approx. 1.8 kg (3.97 lbs.) (TK22 CNG) resp. approx. 2.2 kg (4.85 lbs.) (TK22 CNG with safety device for grip sleeve)	

Other designs available on request

» Fueling nozzle **TK22 CNG**

ORDERING | WEH® TK22 CNG Fueling nozzle

approx. dimensions (mm)

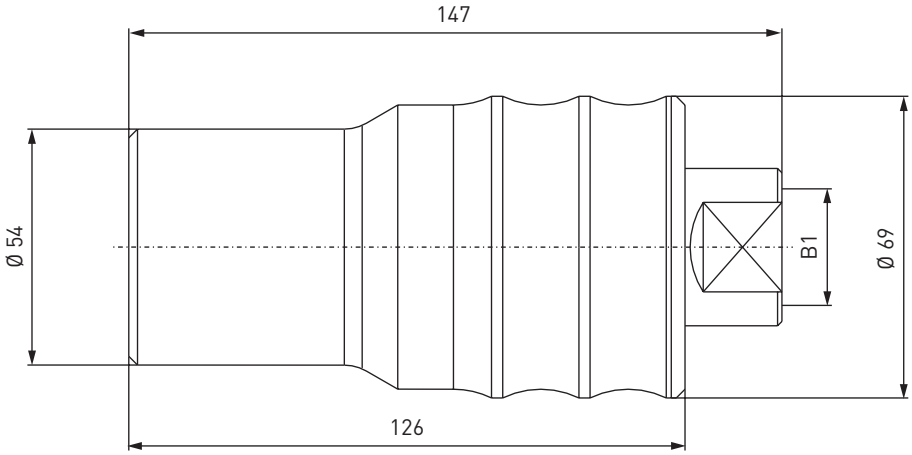

Part No.	Description	Pressure PS	B1 (female thread)
C1-18890-X2-X01	TK22 CNG	300 bar / 4,300 psi	UNF 7/8"-14*
C1-102476-X01	TK22 CNG	350 bar / 5,000 psi	UNF 7/8"-14*

* acc. to SAE J1926-1

» Fueling nozzle **TK22 CNG**

ACCESSORIES

The following accessories are available for the WEH® TK22 CNG Fueling nozzle:

Safety device for grip sleeve

TK22 CNG fueling nozzle with safety device for grip sleeve is appropriated for self-service operation.

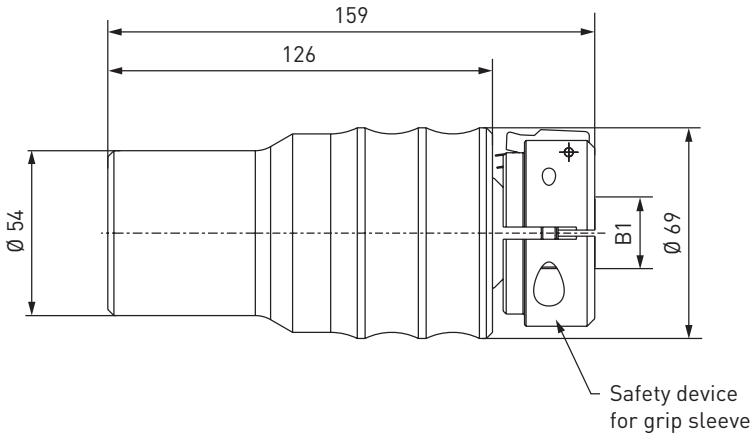

Part No.	Description
W33337	Safety device for grip sleeve for TK22 CNG

Filling hoses

Filling hoses for connecting fueling nozzle and dispenser, complete with fittings and press-fittings supported by coil spring stubs.

Part No.	B1/B2 (female thread)	Hose length
E68-1033-3000	UNF 7/8"-14*	3 m
E68-1033-4000	UNF 7/8"-14*	4 m
E68-1033-5000	UNF 7/8"-14*	5 m

* acc. to SAE J514, 37° cone

WEH® breakaway coupling

The appropriate TSA5 CNG and TSA6 CNG breakaway coupling can be found on pages 64 and 68.

» Fueling nozzle **TK22 CNG**

Fittings

Stainless steel fittings for connecting port 'B1' to the filling hose.

Part No.	Description	Connection fueling nozzle	Connection filling hose
W6703-X1	Fitting	UNF 7/8"-14* male thread	UNF 7/8"-14** male thread

* acc. to SAE J1926*2, 37° cone
** acc. to SAE J1926-1

A detailed overview of all available fitting connections is available on request.

Spare parts

Various parts are available as spares for the TK22 CNG fueling nozzle.

Part No.	Description
W127951	1 Spare parts set 200 bar / 3,000 psi (grip sleeve incl. metal sleeve and circlip)
W127950	1 Spare parts set 250 bar / 3,600 psi (grip sleeve incl. yellow impact protection, metal sleeve and circlip)
On request	Maintenance spray

» Fueling nozzle **TK24 CNG**

DESCRIPTION

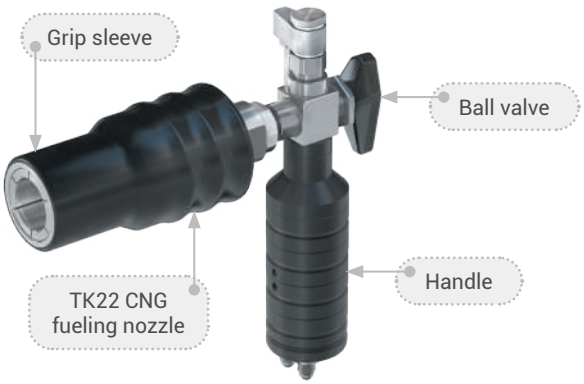

Features
- Compatible with receptacles acc. to NGV1 standard and ISO 14469 (see page 7, compatibility)
- Push-Pull actuation
- Integrated shut-off valve
- Plastic thermal protection
- Version with or without gas recirculation
- Grip position at 90°
- Ergonomic design
- WEH® Jaw locking mechanism
- Colour coded impact protection (200 bar / 3,000 psi black, 250 bar / 3,600 psi yellow)
- High-grade materials

The TK24 CNG fueling nozzle combines user comfort with maximum convenience. The integrated TK22 CNG fueling nozzle features 'push-to-connect' jaw locking system which automatically moves the grip sleeve back when making a connection. The ergonomic design of the handle enables an easy connection to the receptacle. This feature can help to prevent stresses on the high pressure hose and hose damage due to chafing on the ground. Refueling starts after opening the integrated ball valve. Closing the ball valve finishes refueling and the integrated gas recirculation automatiaclly depressurizes the system. The nozzle can then be disconnected by pulling back the grip sleeve of the TK22 CNG.
Optionally type TK24 CNG is also available with integrated gas recirculation.

The extended construction of the integrated TK22 CNG fueling nozzle helps in refueling difficult-to-access receptacles. WEH® Jaws grip symmetrically, avoiding damage to the receptacle profile which could result in leakage.

Application
Fueling nozzle for CNG fast filling of buses and trucks (also for slowfill refueling) to be used with WEH® Receptacles acc. to NGV1 standard and ISO 14469 (see page 7, compatibility).
Operation only by specially trained service personnel. Not for self-service operation!

TECHNICAL DATA

Characteristics	Basic version	
Technical nominal size	5 mm	
Nominal pressure	P30HD acc. to ANSI NGV1 / C200 acc. to ISO 14469 PN = 200 bar (3,000 psi)	P36HD acc. to ANSI NGV1 / C250 acc. to ISO 14469 PN = 250 bar (3,600 psi)
Max. allowable operating pressure	PS = 300 bar (4,300 psi)	PS = 350 bar (5,000 psi)
Temperature range	-40 °C up to +85 °C (-40 °F up to +185 °F)	
Material	Corrosion resistant	
Sealing material	Natural gas resistant	
Design	With plastic thermal protection, integrated ball valve and gas recirculation	
Weight	Approx. 2.7 kg (5.95 lbs.) without gas recirculation resp. approx. 3.4 kg (7.50 lbs.) with gas recirculation	

Other designs available on request

» Fueling nozzle **TK24 CNG**

ORDERING | WEH® TK24 CNG Fueling nozzle with gas recirculation

approx. dimensions (mm)

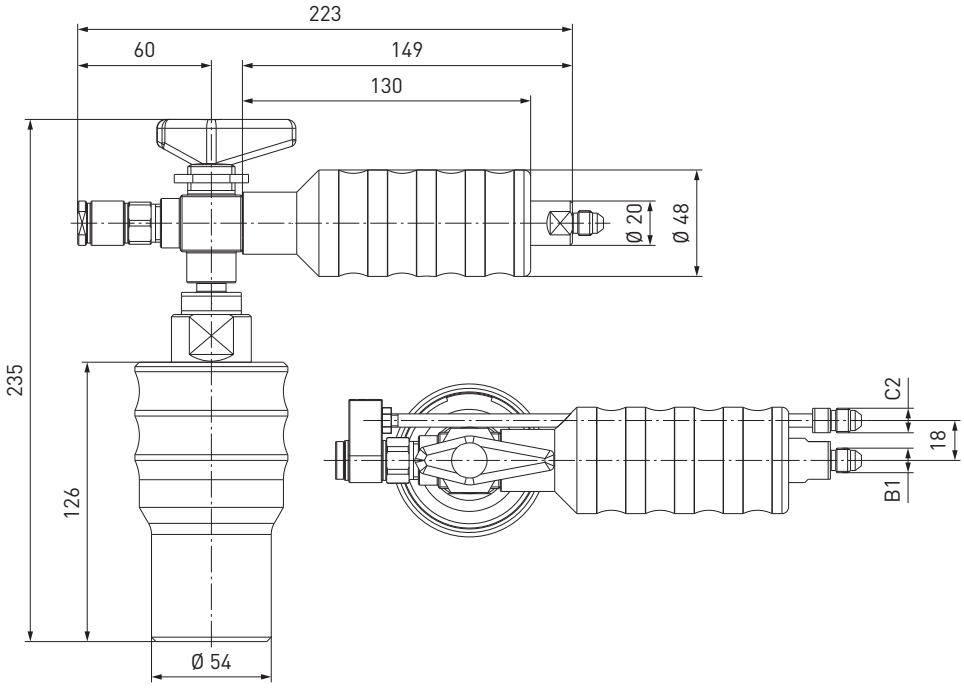

Part No.	Description	Pressure PS	B1 (male thread)	C2 (male thread)
C1-42414-X2-X01	TK24 CNG	300 bar / 4,300 psi	UNF 7/16"-20*	UNF 7/16"-20*
On request	TK24 CNG	350 bar / 5,000 psi	UNF 7/16"-20*	UNF 7/16"-20*

* acc. to SAE J514, 37° cone

» Fueling nozzle **TK24 CNG**

ORDERING | WEH® TK24 CNG Fueling nozzle without gas recirculation

approx. dimensions (mm)

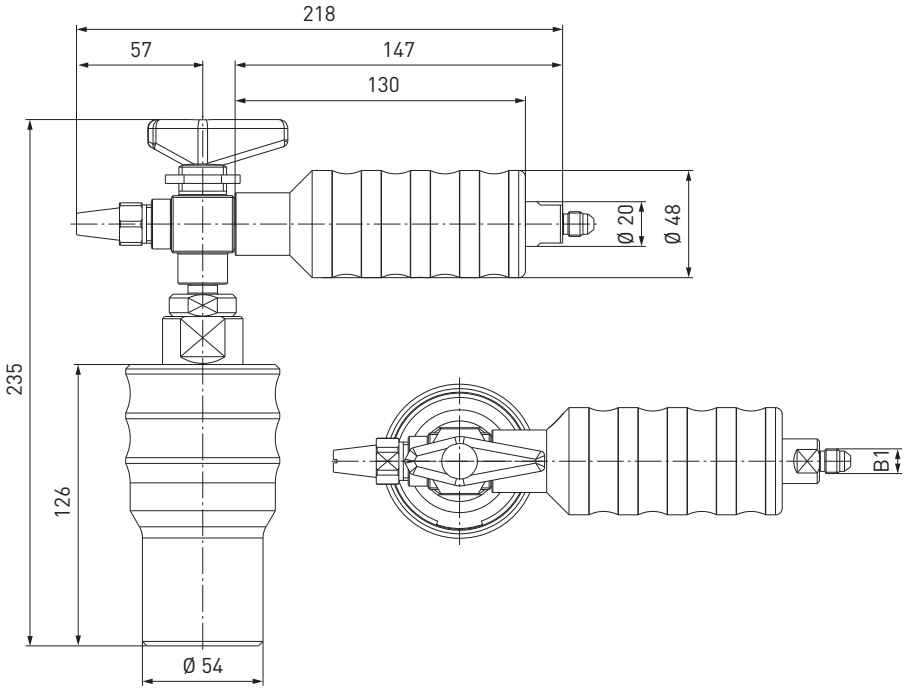

Part No.	Description	Pressure PS	B1 (male thread)
C1-72213-X1-X01	TK24 CNG	300 bar / 4,300 psi	UNF 7/16"-20*
On request	TK24 CNG	350 bar / 5,000 psi	UNF 7/16"-20*

* acc. to SAE J514, 37° cone

ACCESSORIES

The following accessories are available for the WEH® TK24 CNG Fueling nozzle:

Hose sets TK24 CNG - TSA1 CNG

Filling and venting hoses for connecting fueling nozzle and TSA1 CNG breakaway coupling, complete fittings and press-fittings supported by coil spring stubs.

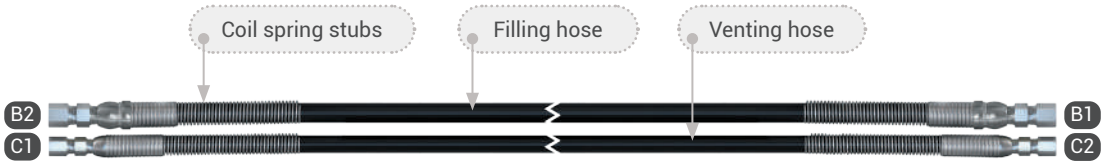

Part No.	B1/B2 (female thread)	C1/C2 (female thread)	Hose length
C1-106385	UNF 7/16"-20*	UNF 7/16"-20*	3 m
C1-106386	UNF 7/16"-20*	UNF 7/16"-20*	4 m
C1-106387	UNF 7/16"-20*	UNF 7/16"-20*	5 m

* acc. to SAE J514, 37° cone

» Fueling nozzle **TK24 CNG**

Hose sets TK24 CNG - TSA2 CNG

Filling and venting hoses for connecting fueling nozzle / dispenser and TSA2 CNG inline breakaway coupling, complete fittings and press-fittings supported by coil spring stubs.

Bestellnummer	B1/B2 (female thread)	C1/C2 (female thread)	Hose length
C1-106395	UNF 7/16"-20*	UNF 7/16"-20*	2.5 | 0.5 m
C1-106396	UNF 7/16"-20*	UNF 7/16"-20*	3.5 | 0.5 m
C1-106397	UNF 7/16"-20*	UNF 7/16"-20*	4.5 | 0.5 m

* acc. to SAE J514, 37° cone

Filling hoses

Filling hoses for connecting fueling nozzle (without gas recirculation) and dispenser, complete with fittings and press-fittings supported by coil spring stubs.

Part No.	B1/B2 (female thread)	Hose length
E68-1032-3000	UNF 7/16"-20*	3 m
E68-1032-4000	UNF 7/16"-20*	4 m
E68-1032-5000	UNF 7/16"-20*	5 m

* acc. to SAE J514, 37° cone

WEH® breakaway coupling

The appropriate TSA1 CNG and TSA2 CNG breakaway coupling can be found on pages 34 and 38.

Fittings

Stainless steel fittings for connecting port 'B1' to the filling hose or port 'C2' to the venting hose.

Part No.	Description	Connection fueling nozzle	Connection filling hose
E80-648P	Fitting	UNF 7/16"-20* female thread	UNF 9/16"-18* male thread

* acc. to SAE J514, 37° cone

A detailed overview of all available fittings is available on request.

Spare parts

Various parts are available as spares for the TK24 CNG fueling nozzle.

Part No.	Description
W127951	1 Spare parts set 200 bar / 3,000 psi (grip sleeve incl. metal sleeve and circlip)
W127950	1 Spare parts set 250 bar / 3,600 psi (grip sleeve incl. yellow impact protection, metal sleeve and circlip)
On request	Maintenance spray

» Breakaway coupling **TSA5 CNG**

DESCRIPTION

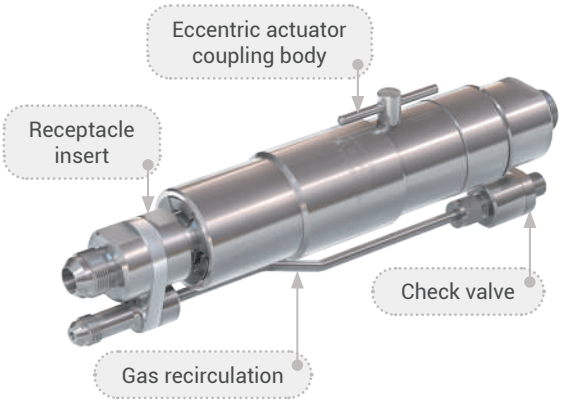

Features
- Re-usable without factory reservicing
- Installation at the dispenser
- Small compact design
- Version with or without gas recirculation
- Integrated cleanable filter (40 µm); optional without filter
- Check valve at venting line
- No additional tool necessary

The type TSA5 CNG breakaway coupling offers additional safety for your bus and truck fueling station. The breakaway is installed between the dispenser and the filling/venting hose. In the event of accidental deployment, e.g. driving a vehicle from the dispenser with the nozzle remaining in the vehicle fuel port, the coupling will separate the connections between dispenser and hose sealing both ends. This protects largely the receptacle, the fueling nozzle and the dispenser against damage. The detached coupling can be easily reattached and placed back in service after having been function tested. We recommend to use breakaways with integrated filter. The filter provides clean natural gas and is easy to maintain. Of course we also offer breakaway couplings without filter.

The breakaway device consists of a coupling body, a receptacle insert and a gas recirculation with check valve. The breakaway is also available without gas recirculation.

We also offer fueling assemblies consisting of a fueling nozzle, a hose set and a breakaway coupling (for fueling assemblies see respective fueling nozzle).

Application
Breakaway coupling for bus and truck fueling stations for installation between the dispenser and the filling/venting hose.

TECHNICAL DATA

Characteristics	Basic version
Technical nominal size	12 mm
Nominal pressure	PN = 200 bar (3,000 psi) | PN = 250 bar (3,600 psi)
Max. allowable operating pressure	PS = 300 bar (4,300 psi) | PS = 350 bar (5,000 psi)
Temperature range	-40 °C up to +85 °C (-40 °F up to +185 °F)
Breakaway force	222 - 660 N
Material	Corrosion resistant stainless steel, aluminum
Sealing material	Natural gas resistant
Design	With gas recirculation and filter (40 µm)

Other designs available on request

» Breakaway coupling **TSA5 CNG**

ORDERING | WEH® TSA5 CNG Breakaway coupling with gas recirculation

approx. dimensions (mm)

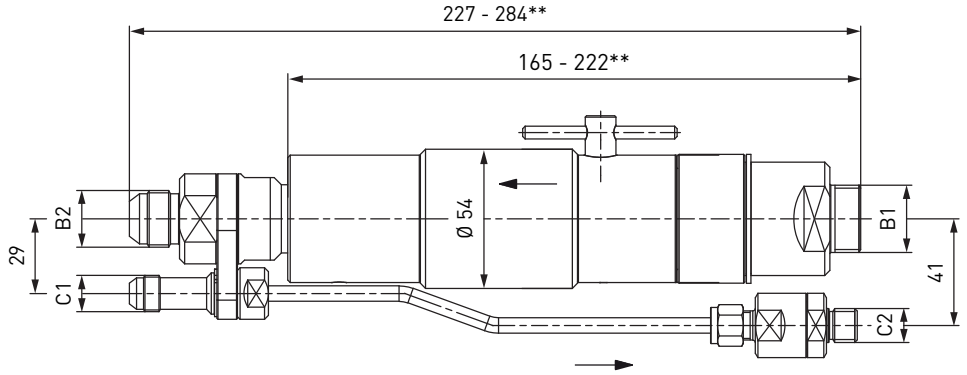

Part No.	Description	Pressure PS	B1 (male thread)	B2 (male thread)	C1 (male thread)	C2 (male thread)
C1-17198-X7-X01	TSA5 CNG with filter	300 bar / 4,3000 psi	G3/4"	UNF 7/8"-14*	UNF 9/16"-18*	G1/4"
C1-102489-X01	TSA5 CNG with filter	350 bar / 5,000 psi	G3/4"	UNF 7/8"-14*	UNF 9/16"-18*	G1/4"

* acc. to SAE J514, 37° cone
** length depending on type of breakaway coupling

ORDERING | WEH® TSA5 CNG Breakaway coupling without gas recirculation

approx. dimensions (mm)

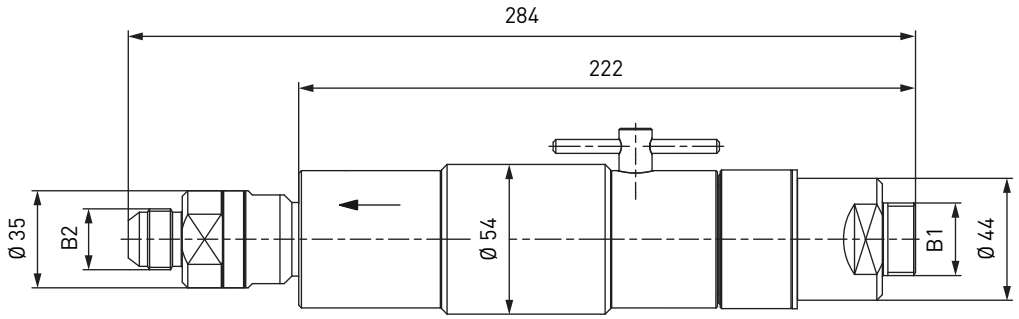

Part No.	Description	Pressure PS	B1 (male thread)	B2 (male thread)
C1-18693-X2-X01	TSA5 CNG with filter	300 bar / 4,3000 psi	G3/4"	UNF 7/8"-14*

* acc. to SAE J514, 37° cone

» Breakaway coupling **TSA5 CNG**

ACCESSORIES

The following accessories are available for the WEH® TSA5 CNG Breakaway coupling:

Dispenser mounting

The breakaway coupling can also be used with a dispenser mounting. The mounting is firmly attached to the dispenser. The integrated guide tube provides a straight pull-off force.

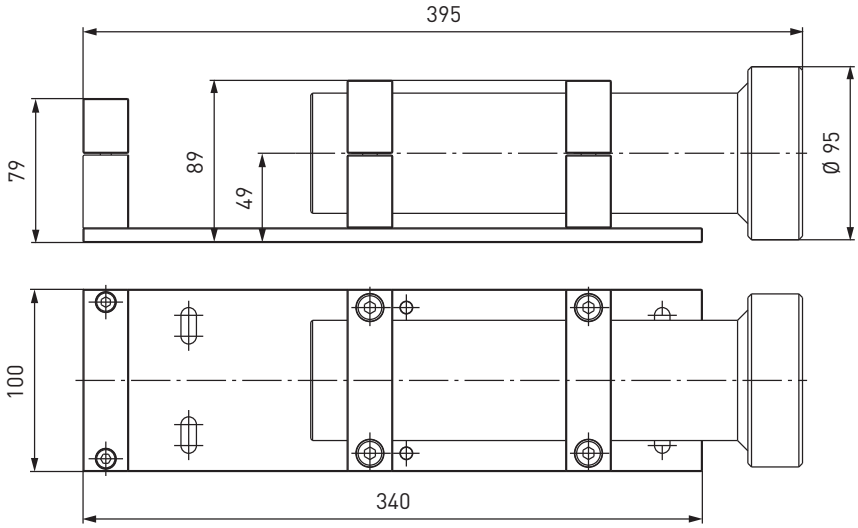

Part No.	Description
C1-82110	Dispenser mounting for TSA5 CNG

Hoses

Please see page 124 or the corresponding fueling nozzles for filling and venting hoses suitable for the TSA5 CNG breakaway coupling.

» Breakaway coupling **TSA5 CNG**

Fittings

Stainless steel fittings for connecting port 'B1' to the filling hose or port 'C2' to the venting hose.

Part No.	Description	Connection breakaway	Connection filling hose
E80-97227	Fitting	UNF 9/16"-18* female thread	UNF 9/16"-18* female thread
E80-79538	Fitting	UNF 9/16"-18* female thread	UNF 9/16"-18 ** female thread
E80-647P	Fitting	UNF 9/16"-18* female thread	UNF 7/8"-14* male thread
E80-66850	Fitting	UNF 9/16"-18* female thread	UNF 3/4"-16* male thread
E80-65592	Fitting	UNF 9/16"-18* female thread	NPT 1/4" female thread
E80-52705	Fitting	UNF 7/8"-14* female thread	UNF 9/16"-18* male thread
E80-105411	Fitting	UNF 7/8"-14* female thread	UNF 7/16"-20* male thread
E80-48976	Fitting	UNF 7/8"-14* female thread	NPT 1/4" male thread

* acc. to SAE J514, 37° cone
** acc. to SAE J1926-1

A detailed overview of all available fittings is available on request.

Spare parts

Various parts are available as spares for the TSA5 CNG breakaway coupling.

Part No.	Description
W83706	Receptacle insert for UNF 7/8"-14 male thread, 37° (B2), UNF 9/16"-18 male thread, 37° (C1)
W106557	Receptacle insert for UNF 7/8"-14 male thread, 37° (B2)
B200B-119726	Spare seal set for receptacle insert W83706
B200B-119725	Spare seal set for receptacle insert W106557
E69-9062	Wire filter insert 40 µm (incl. spring and back-up ring)
W139034	Spare part set consisting of a gas recirculation tube (length: approx. 195 mm) and a firmly mounted check valve for G1/4" male thread (C2)

» Inline breakaway coupling **TSA6 CNG**

DESCRIPTION

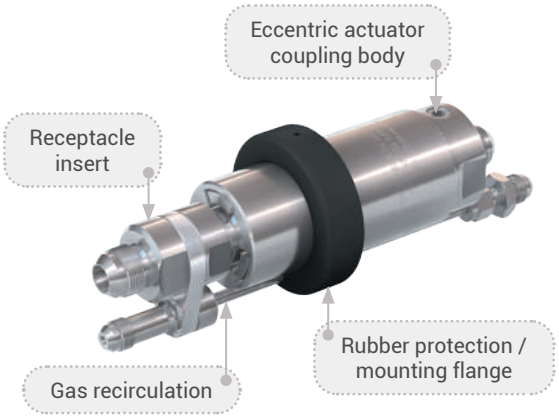

Features
- Re-usable without factory reservicing
- Installation inbetween the filling and venting hoses
- Small compact design
- Version with or without gas recirculation
- Rubber protection / mounting flange
- Eccentric actuation via an allen wrench

With type TSA6 CNG, an inline breakaway coupling which is installed inbetween the filling and venting hoses, is now also available for bus and truck fueling stations. In the event of accidental deployment, e.g. driving a vehicle from the dispenser with the nozzle remaining in the vehicle fuel port, the coupling will separate the connections between dispenser and hoses sealing both ends. This protects largely the receptacle, the fueling nozzle and the dispenser against damage. The detached coupling can be easily reattached and placed back in service after having been function tested.

The breakaway device consists of a coupling body, a receptacle insert and an optional gas recirculation.

We recommend the installation of a TSF5 CNG filter (see page 108) when using the TSA6 CNG inline breakaway coupling. The filter protects your system from dirt ingress.

We also offer cfueling assemblies consisting of a fueling nozzle, a hose set and a breakaway coupling (for fueling assemblies see respective fueling nozzle).

Application
Inline breakaway coupling for bus and truck fueling stations for installation inbetween the filling and venting hoses.

TECHNICAL DATA

Characteristics	Basic version
Technical nominal size	12 mm
Nominal pressure	PN = 200 bar (3,000 psi) | PN = 250 bar (3,600 psi)
Max. allowable operating pressure	PS = 300 bar (4,300 psi) | PS = 350 bar (5,000 psi)
Temperature range	-40 °C up to +85 °C (-40 °F up to +185 °F)
Breakaway force	222 - 660 N
Material	Corrosion resistant stainless steel, aluminum
Sealing material	Natural gas resistant
Design	With or without gas recirculation

Other designs available on request

» Inline breakaway coupling **TSA6 CNG**

ORDERING | WEH® TSA6 CNG Inline breakaway coupling with gas recirculation

approx. dimensions (mm)

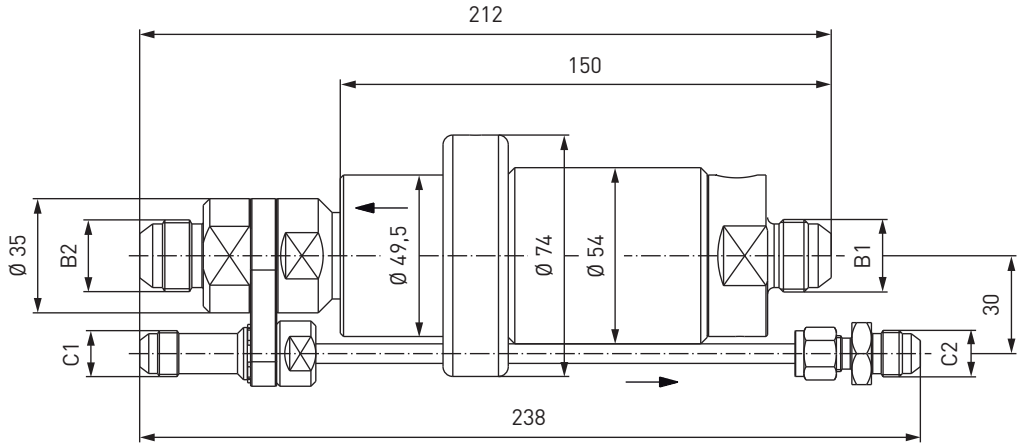

Part No.	Description	Pressure PS	B1/B2 (male thread)	C1/C2 (male thread)
C1-78834-X01	TSA6 CNG	300 bar / 4,3000 psi	UNF 7/8"-14*	UNF 9/16"-18*
C1-102493-X01	TSA6 CNG	350 bar / 5,000 psi	UNF 7/8"-14*	UNF 9/16"-18*
C1-71057-X1-X01	TSA6 CNG	300 bar / 4,3000 psi	UNF 7/8"-14*	UNF 7/16"-20*

* acc. to SAE J514, 37° cone

ORDERING | WEH® TSA6 CNG Inline breakaway coupling without gas recirculation

approx. dimensions (mm)

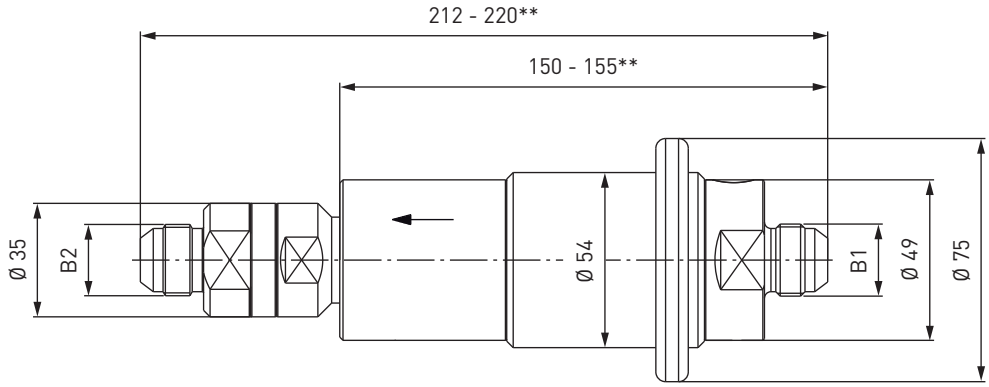

Part No.	Description	Pressure PS	B1/B2 (male thread)
C1-76955-X01	TSA6 CNG	300 bar / 4,3000 psi	UNF 7/8"-14*
C1-102492-X01	TSA6 CNG	350 bar / 5,000 psi	UNF 7/8"-14*

* acc. to SAE J514, 37° cone
** length depending on type of breakaway coupling

» Inline breakaway coupling **TSA6 CNG**

ACCESSORIES

The following accessories are available for the WEH® TSA6 CNG Inline breakaway coupling:

Filter TSF5 CNG (50 µm)

For upgrading existing inline breakaways without integrated filter, we recommend the installation of a TSF5 CNG filter (see page 108). The filter protects your system from dirt ingress. The TSF5 CNG is installed as prefilter in the media inlet between inline breakaway coupling and filling hose.

Part No.	Description	TNW	Pressure (PN)	B1	B2
C1-105923-X01	TSF5 CNG	12 mm	300 bar / 4,3000 psi	UNF 7/8"-14* male thread	UNF 7/8"-14* female thread

* acc. to SAE J514, 37° cone

Hoses

Please see page 124 or the corresponding fueling nozzles for filling and venting hoses suitable for the TSA6 CNG inline breakaway coupling.

Fittings

Stainless steel fittings for connecting port 'B1' to the filling hose or port 'C2' to the venting hose.

Part No.	Description	Connection breakaway	Connection filling hose
E80-97227	Fitting	UNF 9/16"-18* female thread	UNF 9/16"-18* female thread
E80-79538	Fitting	UNF 9/16"-18* female thread	UNF 9/16"-18 ** female thread
E80-647P	Fitting	UNF 9/16"-18* female thread	UNF 7/8"-14* male thread
E80-66850	Fitting	UNF 9/16"-18* female thread	UNF 3/4"-16* male thread
E80-65592	Fitting	UNF 9/16"-18* female thread	NPT 1/4" female thread
E80-52705	Fitting	UNF 7/8"-14* female thread	UNF 9/16"-18* male thread
E80-105411	Fitting	UNF 7/8"-14* female thread	UNF 7/16"-20* male thread
E80-48976	Fitting	UNF 7/8"-14* female thread	NPT 1/4" male thread

* acc. to SAE J514, 37° cone
** acc. to SAE J1926-1

A detailed overview of all available fittings is available on request.

» Inline breakaway coupling **TSA6 CNG**

Spare parts

Various parts are available as spares for the TSA6 CNG inline breakaway coupling.

TSA6 CNG without gas recirculation

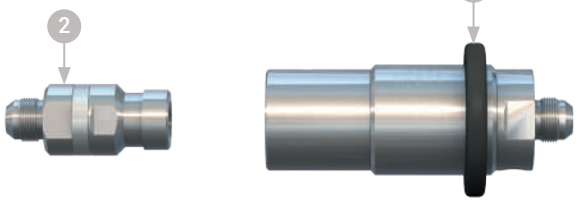

TSA6 CNG with gas recirculation

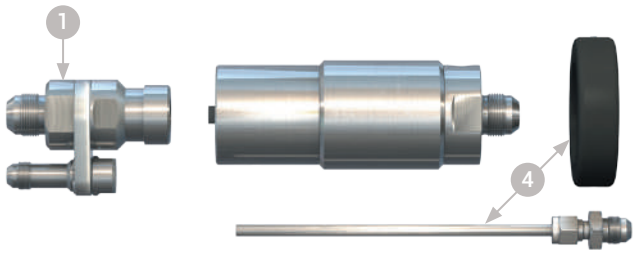

Part No.	Description
W83706	1 Receptacle insert for UNF 7/8"-14 male thread, 37° (B2), UNF 9/16"-18 male thread, 37° (C1)
W71060	1 Receptacle insert for UNF 7/8"-14 male thread, 37° (B2), UNF 7/16"-20 male thread, 37° (C1)
W106557	2 Receptacle insert for UNF 7/8"-14 male thread, 37° (B2)
W74634	2 Receptacle insert for UN 1 1/16"-12 male thread, 37° (B2)
B200B-119726	Spare seal set for receptacle insert W83706 and W71060
B200B-119725	Spare seal set for receptacle insert W106557 and W74634
E80-76830	3 Rubber protection
W139031	4 Spare part set consisting of a mounting flange, gas recirculation tube and a firmly mounted fitting for UNF 9/16"-18 male thread, 37° (C2)
W139839	4 Spare part set consisting of a mounting flange, gas recirculation tube and a firmly mounted fitting for UNF 7/16"-20 male thread, 37° (C2)

» Receptacle **TN5 CNG**

DESCRIPTION

Features
- Compatible with fueling nozzles acc. to NGV1 standard and ISO 14469 (see page 7, compatibility)
- Low-noise refueling
- Integrated high-flow check valve
- Sealing-friendly design
- Option: integrated particle filter (50 µm)
- Coding for pressure range / gas type

The WEH® TN5 CNG receptacle is designed specifically for CNG refueling. Due to the internal aerodynamic design the TN5 CNG receptacle gives low noise (no high frequency whistle) combined with maximum flow rate and fast filling. The receptacle is a very durable unit, minimizing maintenance and down-time. The type TN5 CNG also has an integrated check valve system which is designed to minimize the effect that dirt particles have on the sealing components within the receptacle. The TN5 CNG receptacle is equipped with a coding for pressure range and gas type.

Application
Receptacle for CNG refueling / filling of buses and trucks and fork-lift trucks or other industrial applications, to be used with WEH® Fueling nozzles acc. to NGV1 standard and ISO 14469 (see page 7, compatibility).
Only use receptacles with ECE approval for fitment in road legal vehicles.

TECHNICAL DATA

Characteristics	Basic version
Technical nominal size	Depending on design
Nominal pressure	PN = 200 bar (3,000 psi) | PN = 250 bar (3,600 psi)
Max. allowable operating pressure	PS = 260 bar (ECE) (3,700 psi) | PS = 315 bar (4,500 psi)
Temperature range	-40 °C up to +120 °C (-40 °F up to +248 °F) (ECE) -40 °C up to +85 °C (-40 °F up to +185 °F)
Material	Corrosion resistant
Sealing material	Natural gas resistant
Design	With protection cap (except for receptacles with ACME thread) and fittings (only for receptacles with tube fitting). Versions with or without filter (50 my) available.
Conformity / Tests / Approvals	ECE R110

Other designs available on request

» Receptacle **TN5 CNG**

ORDERING | WEH® TN5 CNG Receptacle with tube fitting and filter (50 µm)

approx. dimensions (mm)

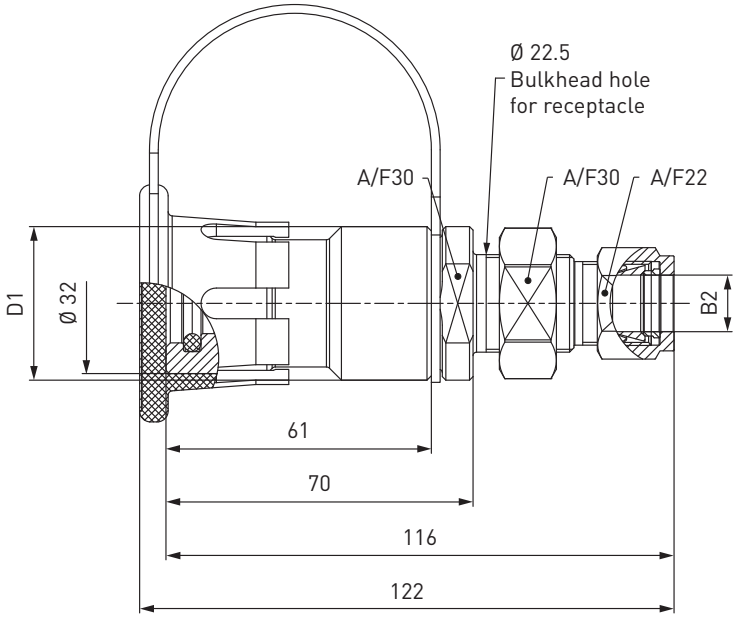

Part No.	Description	TNW	Pressure PS	B2	D1
C1-101906	TN5 CNG (ECE)	8 mm	260 bar / 3,700 psi	Tube Ø 10*	35
C1-106903	TN5 CNG (ECE)	10 mm	260 bar / 3,700 psi	Tube Ø 12*	35
C1-81615	TN5 CNG (ECE)	10 mm	260 bar / 3,700 psi	Tube Ø 1/2"*	34
C1-108583	TN5 CNG (ECE)	12 mm	260 bar / 3,700 psi	Tube Ø 16*	35

* double ferrule fitting

» Receptacle **TN5 CNG**

ORDERING | WEH® TN5 CNG Receptacle with tube fitting (without filter)

approx. dimensions (mm)

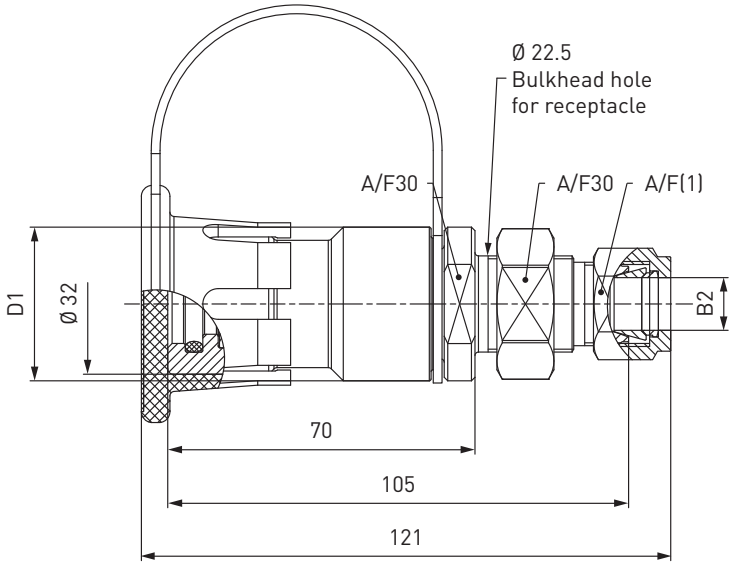

Part No.	Description	TNW	Pressure PS	B2	D1	A/F(1)
C1-49817-X1	TN5 CNG (ECE)	10 mm	260 bar / 3,700 psi	Tube Ø 12*	35	22
C1-108330	TN5 CNG (ECE)	10 mm	260 bar / 3,700 psi	Tube Ø 1/2"*	35	22
C1-35401-X1	TN5 CNG (ECE)	12 mm	260 bar / 3,700 psi	Tube Ø 16*	35	25

* double ferrule fitting

» Receptacle **TN5 CNG**

ORDERING | WEH® TN5 CNG Receptacle with female thread (without filter)

approx. dimensions (mm)

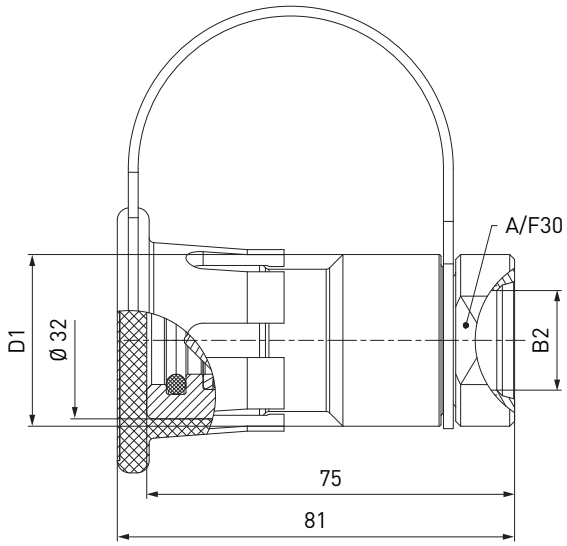

Part No.	Description	TNW*	Pressure PS	B2 (female thread)	D1
C1-35432-X1	TN5 CNG (ECE)	12 mm	260 bar / 3,700 psi	UNF 7/8"-14**	35
C1-42194-X1	TN5 CNG (ECE)	12 mm	260 bar / 3,700 psi	UNF 7/8"-14**	34

* depending on inner diameter of tube
** acc. to SAE J1926-1

ORDERING | WEH® TN5 CNG Receptacle with female thread and ACME thread (without filter)

approx. dimensions (mm)

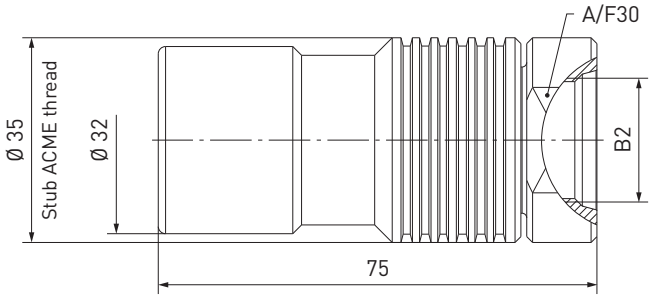

Part No.	Description	TNW*	Pressure PS	B2 (female thread)
C1-84168	TN5 CNG (ECE)	14 mm	260 bar / 3,700 psi	UNF 7/8"-14**

* depending on inner diameter of tube
** acc. to SAE J1926-1

» Receptacle **TN5 CNG**

ORDERING | WEH® TN5 CNG Receptacle with NPT male thread and ACME thread (without filter)

approx. dimensions (mm)

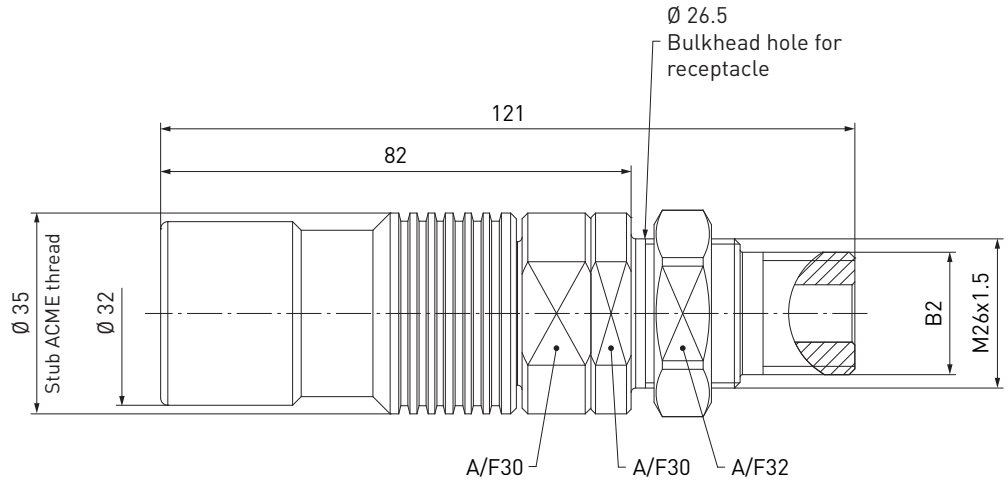

Part No.	Description	TNW	Pressure PS	B2 (male thread)
C1-101485	TN5 CNG (ECE)	10 mm	260 bar / 3,700 psi	NPT 1/2“

» Receptacle **TN5 CNG**

SPARE PARTS

Various parts are available as spares for the WEH® TN5 CNG Receptacle:

Protection cap

Protection cap with a strap to protect the receptacle from dirt ingress.

Part No.	Description
E80-42725	Protection cap

» Manifold **TMF20 CNG**

DESCRIPTION

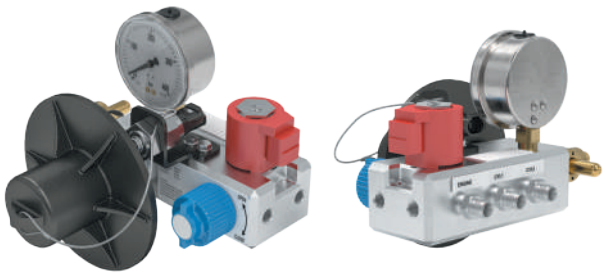

Features
- Manual and automatic system versions
- Customized special solutions possible
- Cost effective
- Light weight
- Easy installation
- Sealing-friendly design

TMF20 CNG manifolds are complete filling units for installation in CNG systems and vehicles.
They are equipped with various high-pressure components and, depending on the version, consist of a manifold block, a WEH® TN5 CNG Receptacle, a NZS connection, a high-pressure gauge, a manual shut-off valve, a micro switch for starter cut-off, an automatic shut-off valve, a WEH® TSF2 CNG Coalescencing filter, an optional pressure sensor and fittings.

Application
Filling unit for installation in CNG systems and vehicles for refueling of buses and trucks with fueling nozzles acc. to NGV1 standard (P30HD) and ISO 14469 (C200) or fueling nozzles acc. to NZS standard.

TECHNICAL DATA

Characteristics	Basic version
Max. allowable operating pressure	PS = 260 bar (3,700 psi)
Temperature range	-40 °C up to +85 °C
Material manifold block	Aluminum or stainless steel (depending on design)
Sealing material	Natural gas resistant
Design*	Manifold block incl. WEH® TN5 CNG Receptacle with protection cap, NZS connection, high-pressure gauge, manual shut-off valve, starter cut-off micro switch, automatic shut-off valve, pressure sensor for fill level indication, WEH® TSF2 CNG Coalescing filter incl. plug and fittings.
Conformity / Tests / Approvals*	TMF20 CNG is tested acc. to (depending on design): - ISO-15500-2:2016 - ISO-15500-3:2012+A1:2016 - ISO-15500-4:2012+A1:2016 - ISO-15500-6:2012+A1:2016 - ISO-15500-13:2012+A1:2016 - JIS D 1601:1995 - ECE R110-R00 WEH® TN5 CNG Receptacle and WEH® TSF2 CNG Coalescing filter are approved acc. to: - TN5 CNG: ECE R110-R04 - TSF2 CNG: ECE R110-R01

* depending on version of the TMF20 CNG. For details please refer to the following pages.
Other designs on request

» Manifold **TMF20 CNG**

OVERVIEW

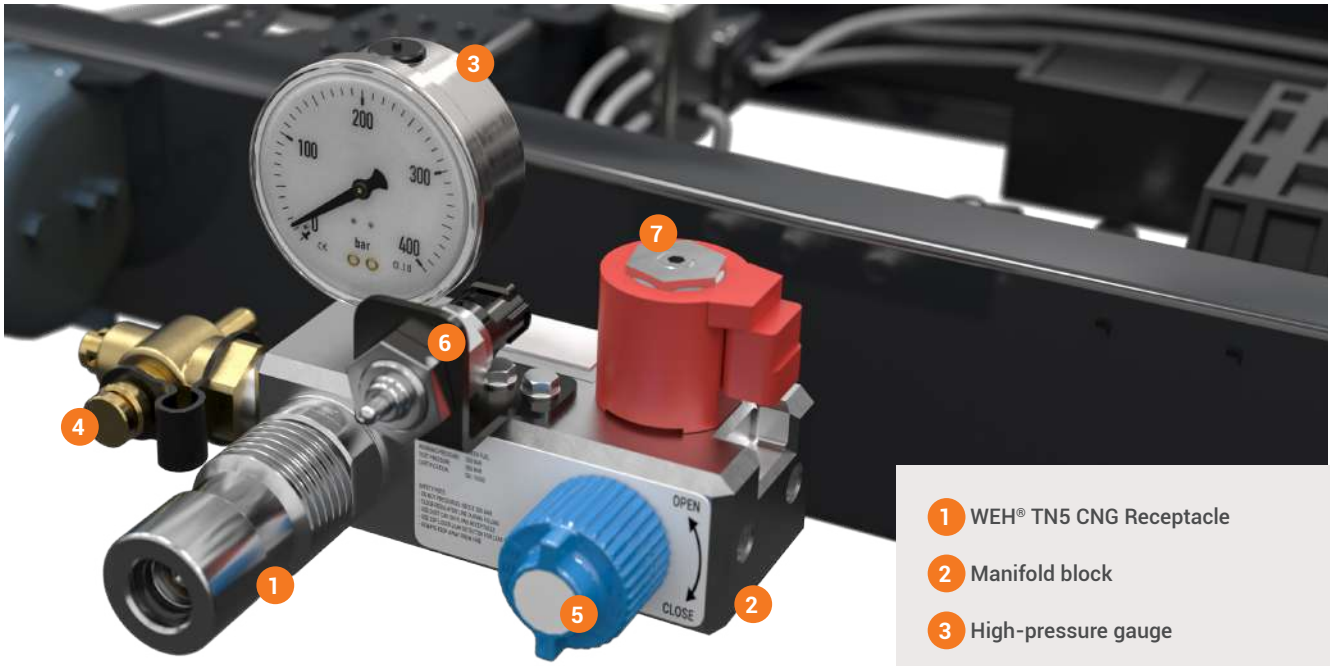

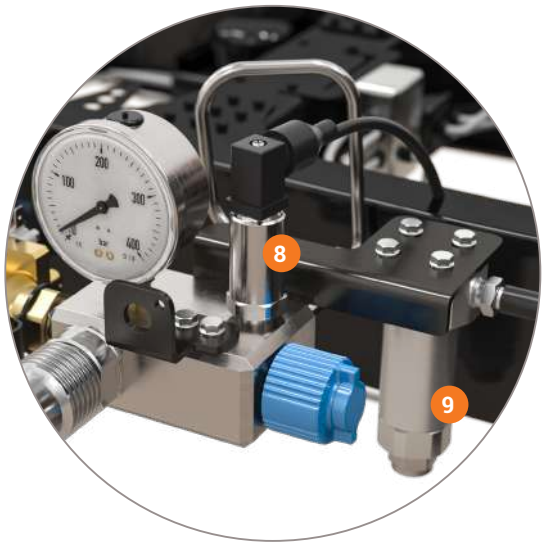

1. WEH® TN5 CNG Receptacle
2. Manifold block
3. High-pressure gauge
4. NZS connection
5. Manual shut-off valve
6. Starter cut-off micro switch
7. Automatic shut-off valve
8. Pressure sensor
9. WEH® TSF2 CNG Coalescing filter

Product series	NZS connection	Manual shut-off valve	Automatic shut-off valve	Micro switch	Pressure sensor	Coalescing filter
TMF20-S1 CNG	✔	✔	✔	✔		
TMF20-S2 CNG		✔	✔	✔		
TMF20-S3 CNG	✔	✔	✔	✔		
TMF20-S4 CNG		✔	✔	✔		
TMF20-S5 CNG (small filter)	✔	✔			✔	✔
TMF20-S5 CNG (large filter)	✔	✔				✔
TMF20-S6 CNG (small filter)		✔		✔	✔	✔

» Manifold **TMF20 CNG**

OVERVIEW TMF20 CNG PRODUCT SERIES WITH AUTOMATIC SHUT-OFF VALVE

TMF20-S1 CNG

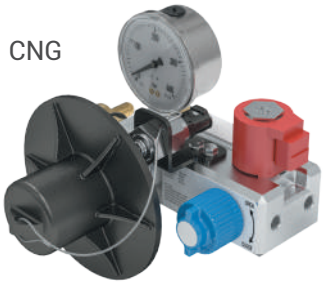

TMF20-S2 CNG

TMF20-S3 CNG

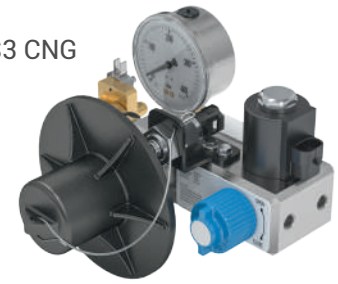

TMF20-S4 CNG

Product series	Manifold block	NZS connection	Automatic shut-off valve				Micro switch
			Voltage		Electrical output		
			12 V DC	24 V DC	16 W	13 W	
TMF20-S1 CNG	Aluminum	✔	✔		✔		✔
TMF20-S2 CNG	Aluminum		✔		✔		✔
TMF20-S3 CNG	Aluminum	✔		✔		✔	✔
TMF20-S4 CNG	Aluminum			✔		✔	✔

Conformity / tests / approvals

The product series S1, S2, S3 and S4 of the TMF20 CNG are tested acc. to:
- ISO-15500-2:2016
- ISO-15500-3:2012+A1:2016
- ISO-15500-6:2012+A1:2016
- ISO-15500-13:2012+A1:2016
- JIS D 1601:1995
- ECE R110-R00

The WEH® TN5 CNG Receptacle is approved acc. to ECE R110-R04.

» Manifold **TMF20 CNG**

ORDERING | Manifold TMF20-S1 CNG

approx. dimensions (mm)

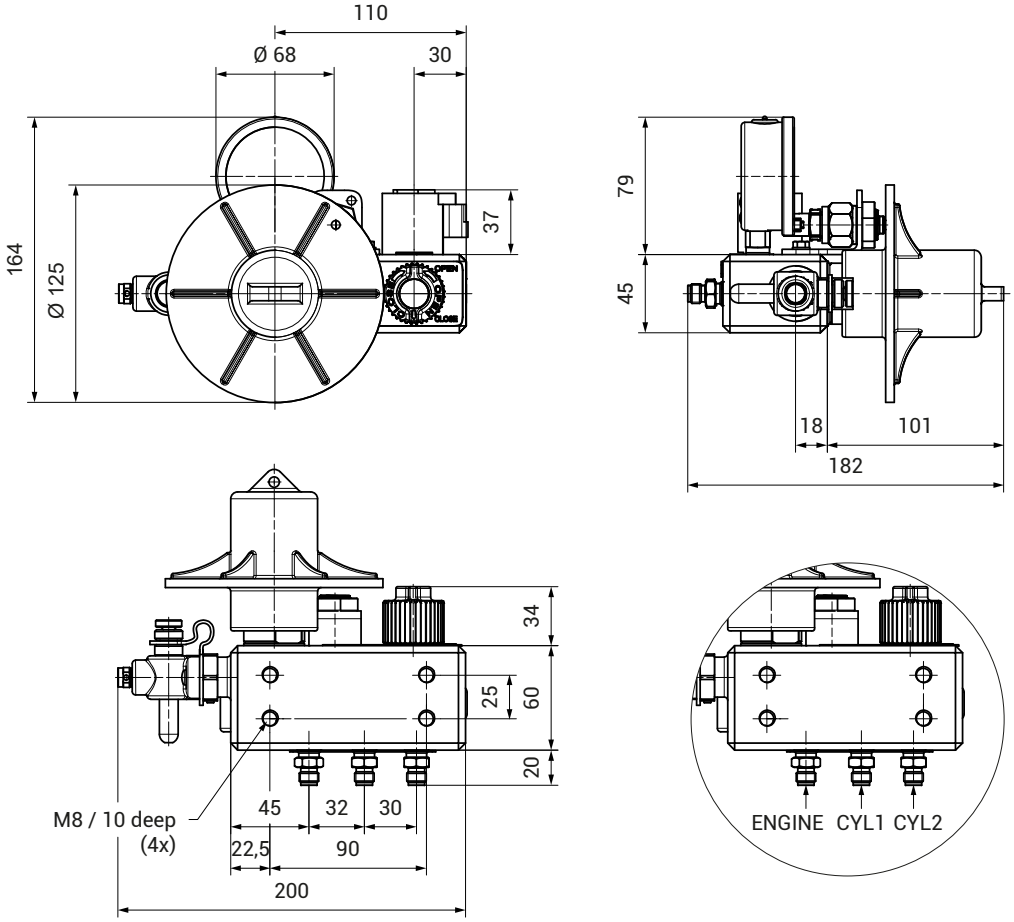

Part no.	Description	Pressure PS	ENGINE (male thread)	CYL1 (male thread)	CYL2 (male thread)
C1-174625	TMF20-S1 CNG	260 bar / 3,700 psi	UNF 7/16“-20	UNF 7/16“-20	UNF 7/16“-20

Functional description (schematic):

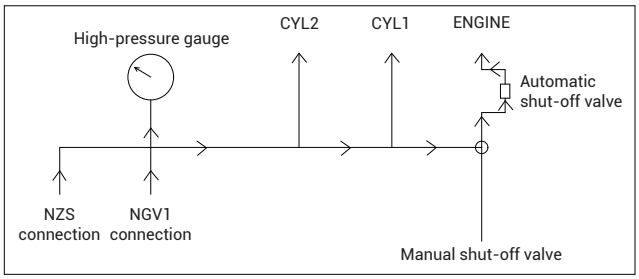

» Manifold **TMF20 CNG**

ORDERING | Manifold TMF20-S2 CNG

approx. dimensions (mm)

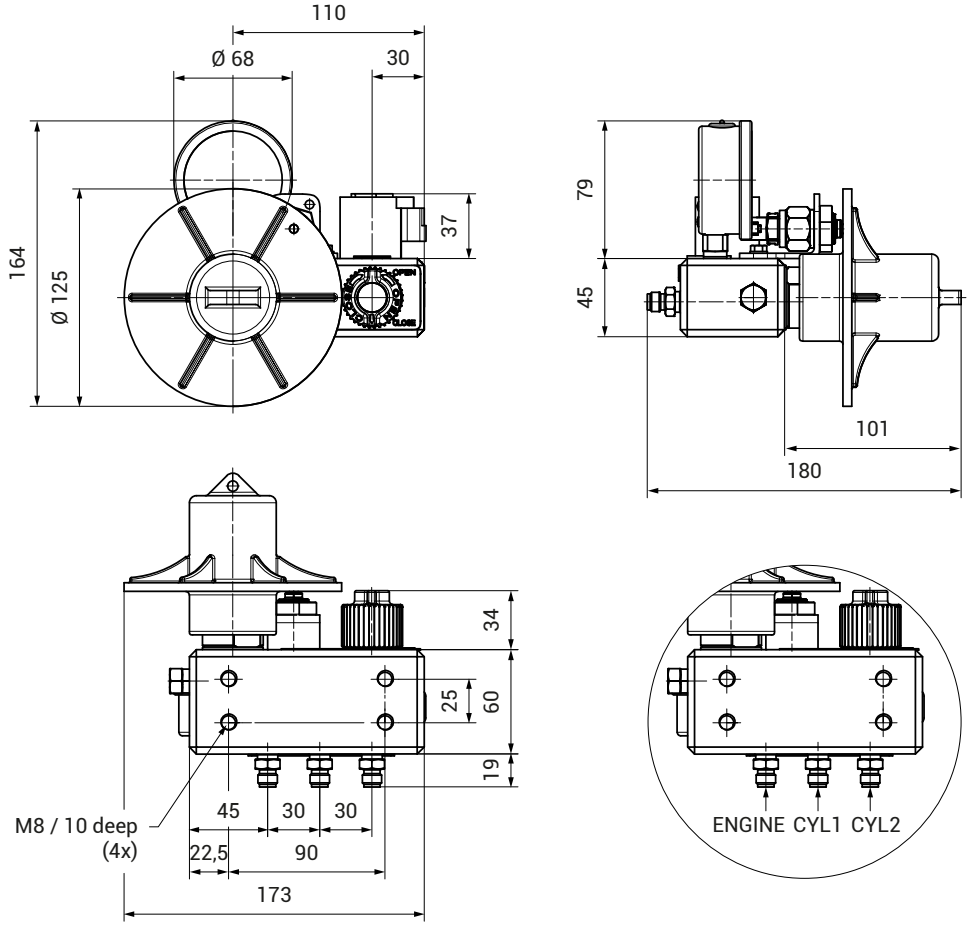

Part no.	Description	Pressure PS	ENGINE (male thread)	CYL1 (male thread)	CYL2 (male thread)
C1-174626	TMF20-S2 CNG	260 bar / 3,700 psi	UNF 7/16"-20	UNF 7/16"-20	UNF 7/16"-20

Functional description (schematic):

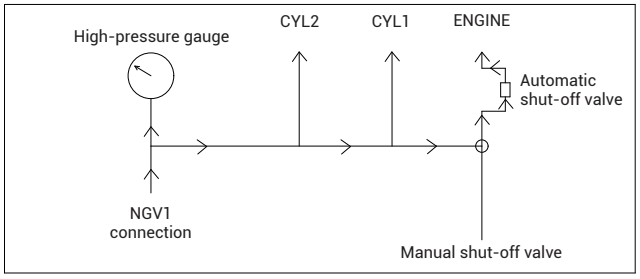

» Manifold **TMF20 CNG**

ORDERING | Manifold TMF20-S3 CNG

approx. dimensions (mm)

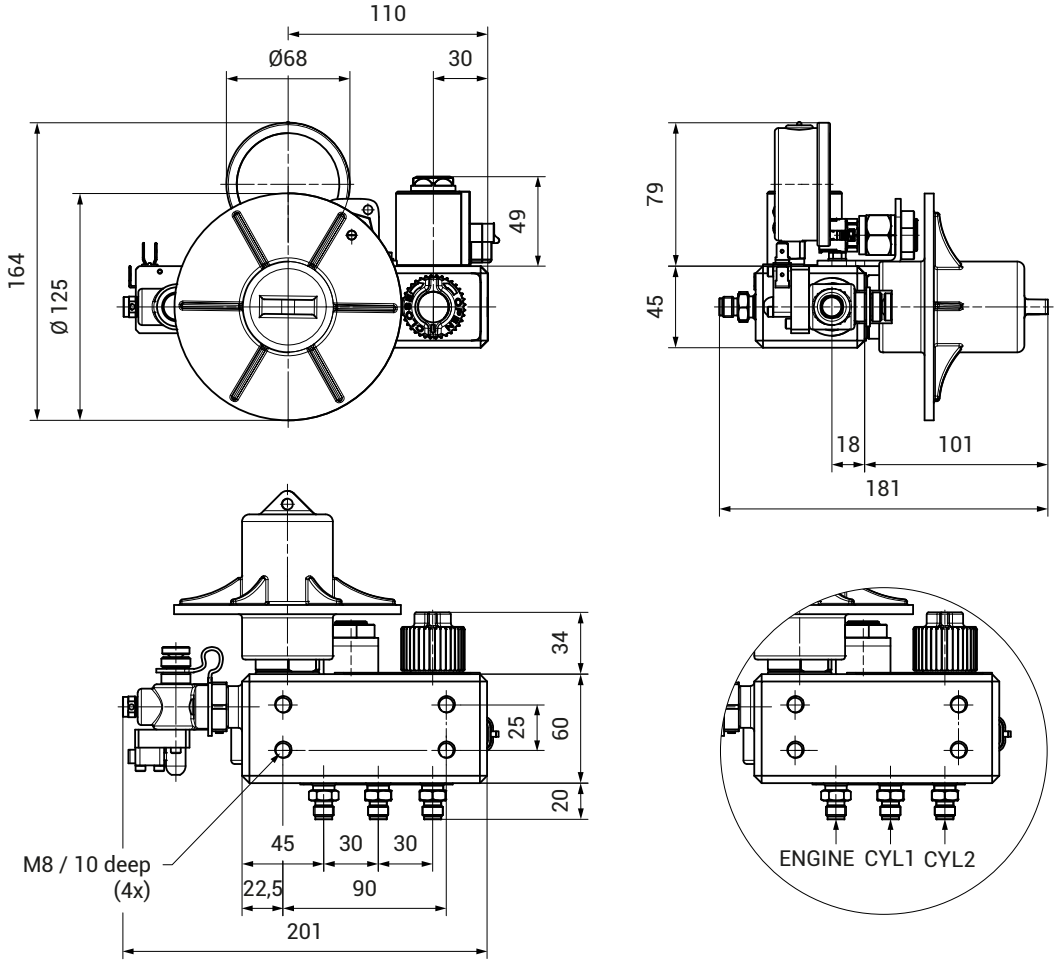

Part no.	Description	Pressure PS	ENGINE (male thread)	CYL1 (male thread)	CYL2 (male thread)
C1-174627	TMF20-S3 CNG	260 bar / 3,700 psi	UNF 7/16"-20	UNF 7/16"-20	UNF 7/16"-20

Functional description (schematic):

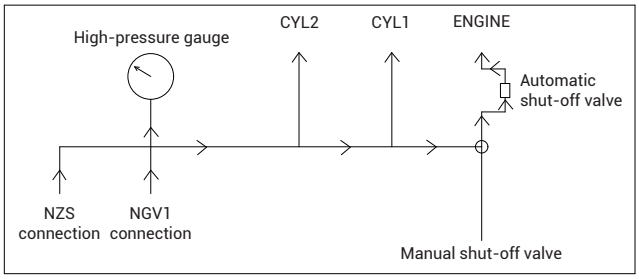

» Manifold **TMF20 CNG**

ORDERING | Manifold TMF20-S4 CNG

approx. dimensions (mm)

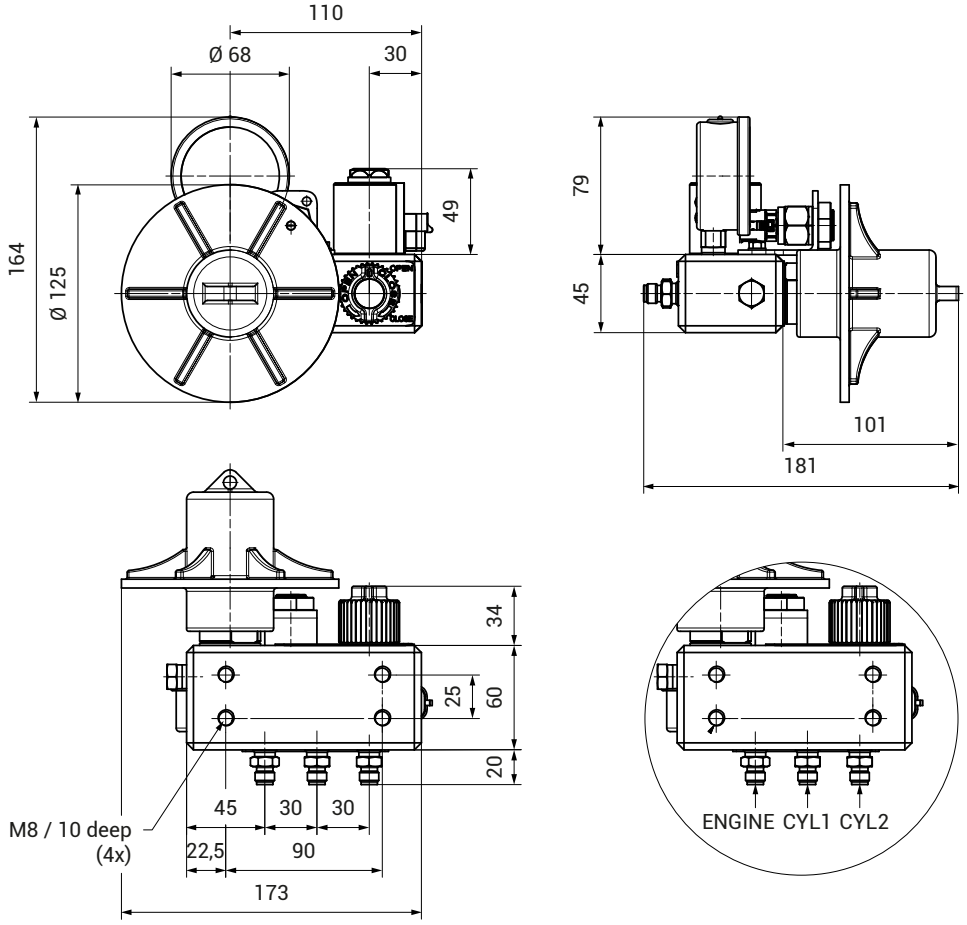

Part no.	Description	Pressure PS	ENGINE (male thread)	CYL1 (male thread)	CYL2 (male thread)
C1-174628	TMF20-S4 CNG	260 bar / 3,700 psi	UNF 7/16"-20	UNF 7/16"-20	UNF 7/16"-20

Functional description (schematic):

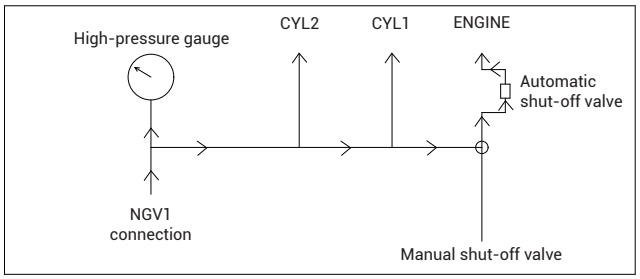

» Manifold **TMF20 CNG**

OVERVIEW TMF20 CNG PRODUCT SERIES WITH FILTER, WITHOUT AUTOMATIC SHUT-OFF VALVE

TMF20-S5 CNG
(small filter)

TMF20-S5 CNG
(large filter)

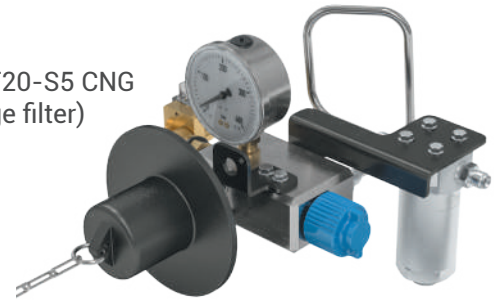

TMF20-S6 CNG
(small filter)

Product series	Manifold block	NZS connection	TSF2 CNG Coalescing filter			Micro switch	Pressure sensor
			Technical nominal size (TNW) (mm)	Mesh size (µm)	Filter cartridge (mm)		
TMF20-S5 CNG (small filter)	Stainless steel	✔	4	0.3 - 0.6	Ø 19.3		✔
TMF20-S5 CNG (large filter)	Stainless steel	✔	4	1.0	Ø 25.4		
TMF20-S6 CNG (small filter)	Stainless steel	✔	4	0.3 - 0.6	Ø 19.3	✔	✔

Conformity / tests / approvals

The product series S5 and S6 of the TMF20 CNG are tested acc. to:
- ISO-15500-2:2016
- ISO-15500-4:2012+A1:2016
- ECE R110-R00

The WEH® TN5 CNG Receptacle and the WEH® TSF2 CNG Coalescing filter are approved acc. to:
- TN5 CNG: ECE R110-R04
- TSF2 CNG: ECE R110-R01

» Manifold **TMF20 CNG**

ORDERING | Manifold TMF20-S5 CNG (small filter)

approx. dimensions (mm)

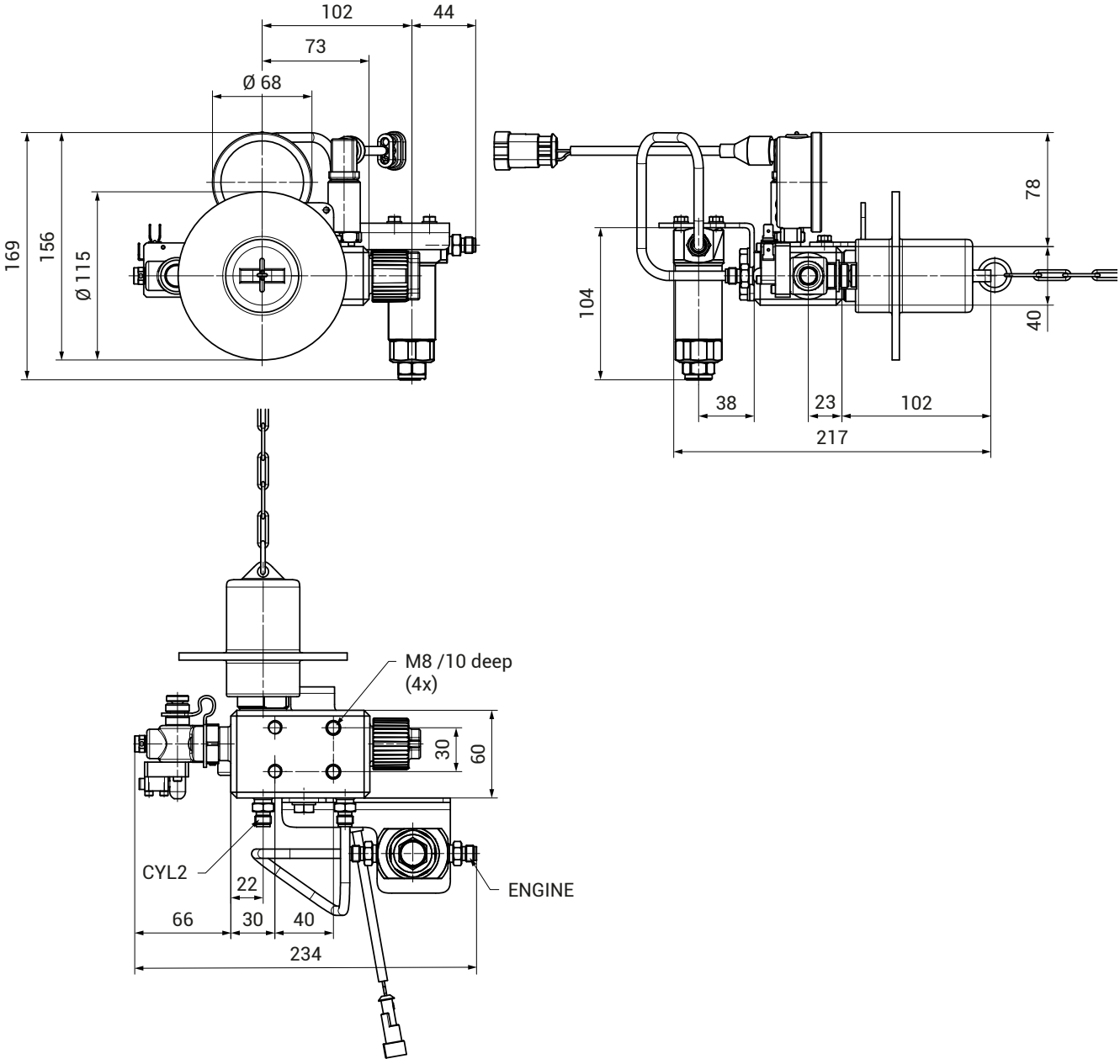

Part no.	Description	Pressure PS	ENGINE (male thread)	CYL2 (male thread)
C1-174629	TMF20-S5 CNG	260 bar / 3,700 psi	UNF 7/16“-20	UNF 7/16“-20

Functional description (schematic):

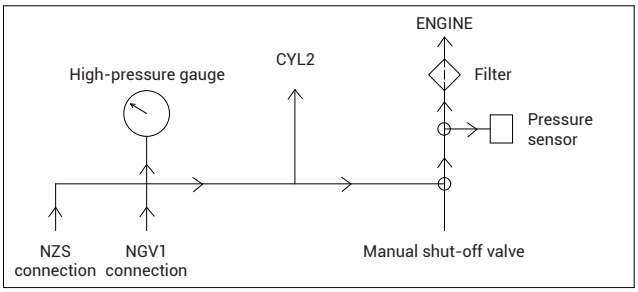

» Manifold **TMF20 CNG**

ORDERING | Manifold TMF20-S5 CNG (large filter)

approx. dimensions (mm)

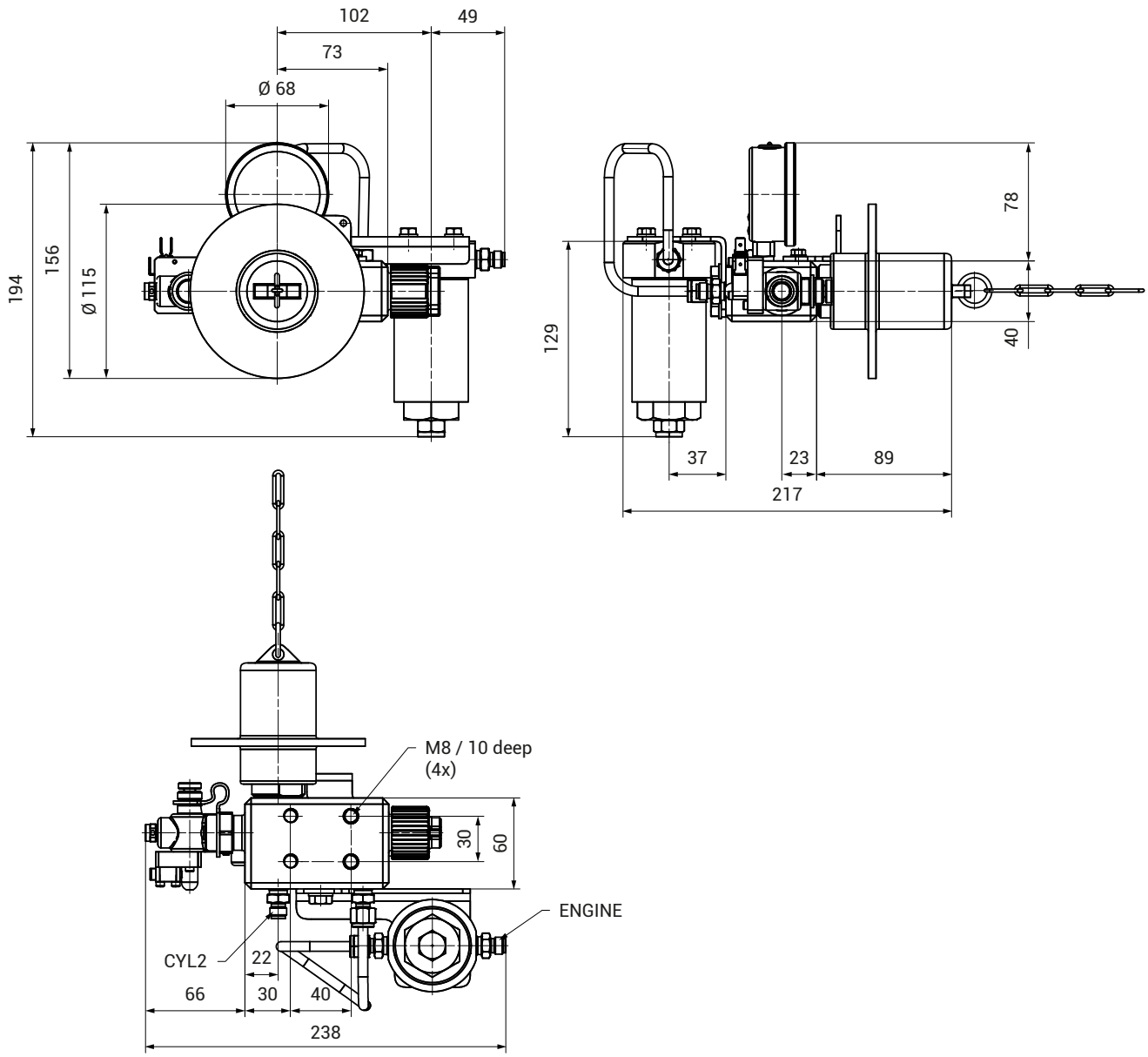

Part no.	Description	Pressure PS	ENGINE (male thread)	CYL2 (male thread)
C1-174630	TMF20-S5 CNG	260 bar / 3,700 psi	UNF 7/16"-20	UNF 7/16"-20

Functional description (schematic):

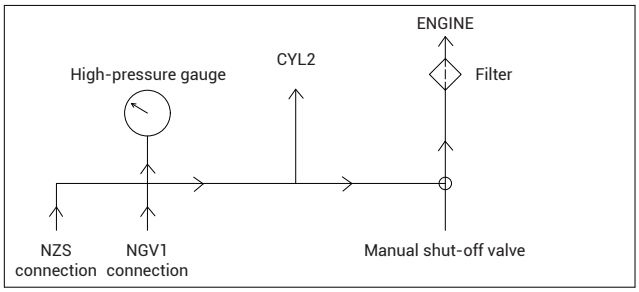

» Manifold **TMF20 CNG**

ORDERING | Manifold TMF20-S6 CNG (small filter)

approx. dimensions (mm)

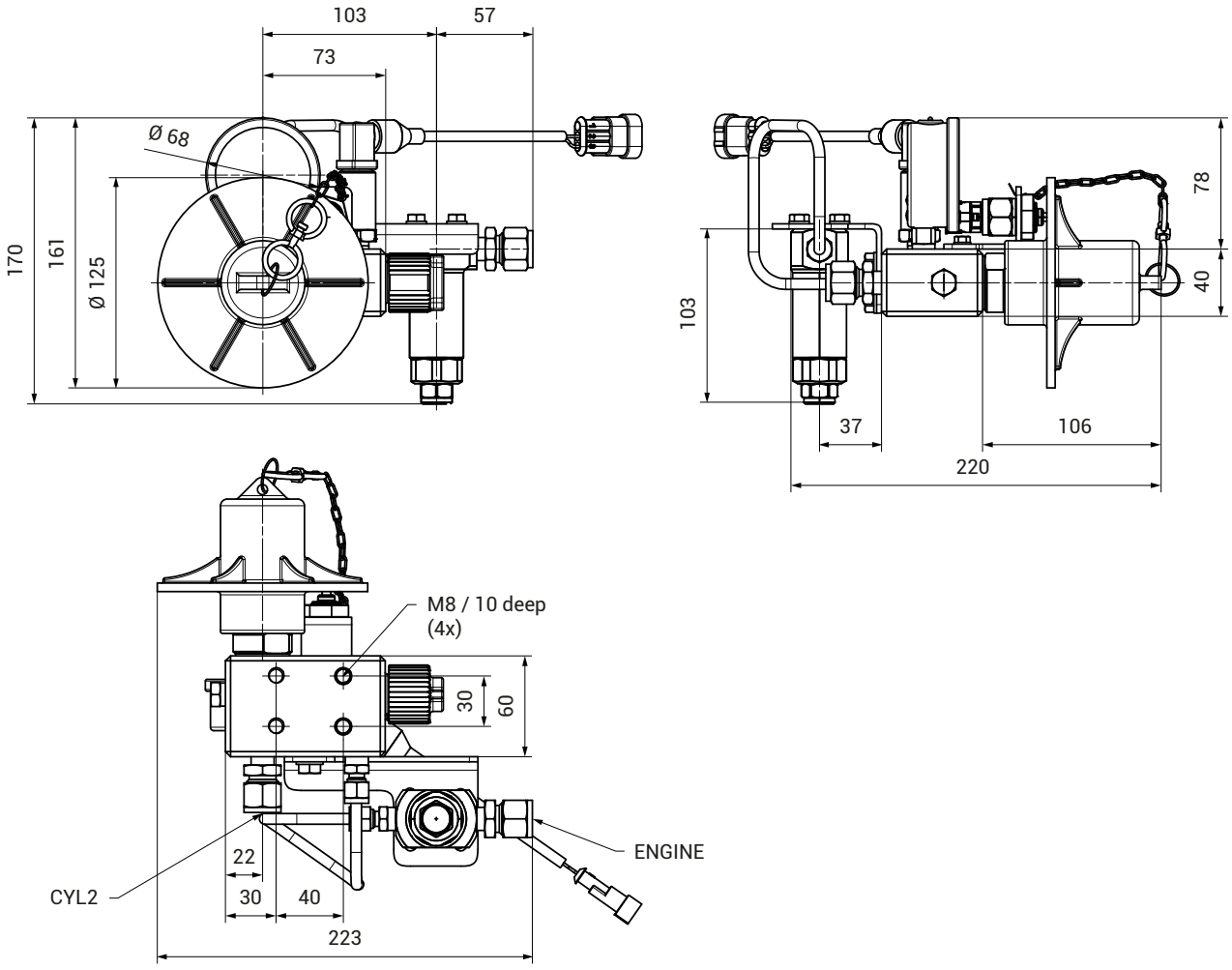

Part no.	Description	Pressure PS	ENGINE	CYL2
C1-177643	TMF20-S6 CNG	260 bar / 3,700 psi	Tube Ø 20*	Tube Ø 20*

* double ferrule fitting

Functional description (schematic):

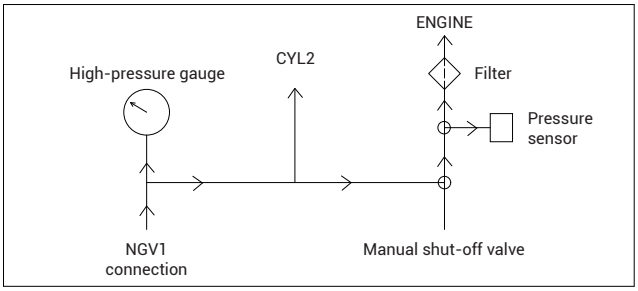

» Manifold **TMF20 CNG**

SPARE PARTS

Various parts are available as spares for the TMF20 CNG manifold.

Part No.	Description
C1-84168	WEH® TN5 CNG Receptacle
On request	O-ring for receptacle
175523	High-pressure gauge
C1-89582	WEH® TSF2 CNG Coalescing filter (small)
C1-82999	WEH® TSF2 CNG Coalescing filter (large)
E69-89541	Filter cartridge (Ø 19.3 mm) for C1-89582
E69-79770	Filter cartridge (Ø 25.4 mm) for C1-82999
E55-251A	Back-up ring slotted for C1-89582
E55-47144	Back-up ring for C1-82999
E80-93858	Retaining ring for C1-82999
On request	O-ring for filter
On request	O-ring for plug

» Fueling system **TS55 CNG**

DESCRIPTION

Features
- Integrated WEH® TN5 CNG receptacle without filter
- Handy cap
- Dirt and splash waterproof construction
- No danger of freezing
- Option: starter cut-off switch

A WEH® Fueling system for refueling buses and trucks is also available. The TS55 CNG consists of a fully assembled housing with an integrated large receptacle and enables easy retrofitting of buses and trucks to compressed natural gas. The converted vehicle can be easily refuelled from the outside by simply removing the fuel tank cap and connecting the nozzle to the receptacle. Then refueling can start.
The integrated WEH® TN5 CNG receptacle ensures rapid filling with a high flow rate and reduced noise during refueling. The fueling system consists of two preinstalled housings for mounting into the vehicle.

Conversion:
When retrofitting buses and trucks to natural gas, the TS55 CNG fueling system is installed into the vehicle body panel. For this, the panel needs an appropriate aperture for installation in which the TS55 CNG fueling system can be easily inserted. The installer will find this system significantly easier than receptacle installation in the engine compartment.

Application
Fueling system for installation in buses and trucks.
Only use fueling systems with ECE approval for fitment in road legal vehicles.

TECHNICAL DATA

Characteristics	Basic version
Technical nominal size	12 mm
Nominal pressure	PN = 200 bar (3,000 psi)
Max. allowable operating pressure	PS = 260 bar (ECE) (3,700 psi)
Temperature range	-40 °C up to +120 °C (-40 °F up to +248 °F) (ECE)
Material	Housing: plastic Receptacle: corrosion resistant
Sealing material	Natural gas resistant
Design	Incl. TN5 CNG receptacle without filter, fuel tank cap and fittings
Conformity / Tests / Approvals	ECE R110 (applies to TN5 CNG)

Other designs available on request

» Fueling system **TS55 CNG**

ORDERING | WEH® TS55 CNG Fueling system

approx. dimensions (mm)

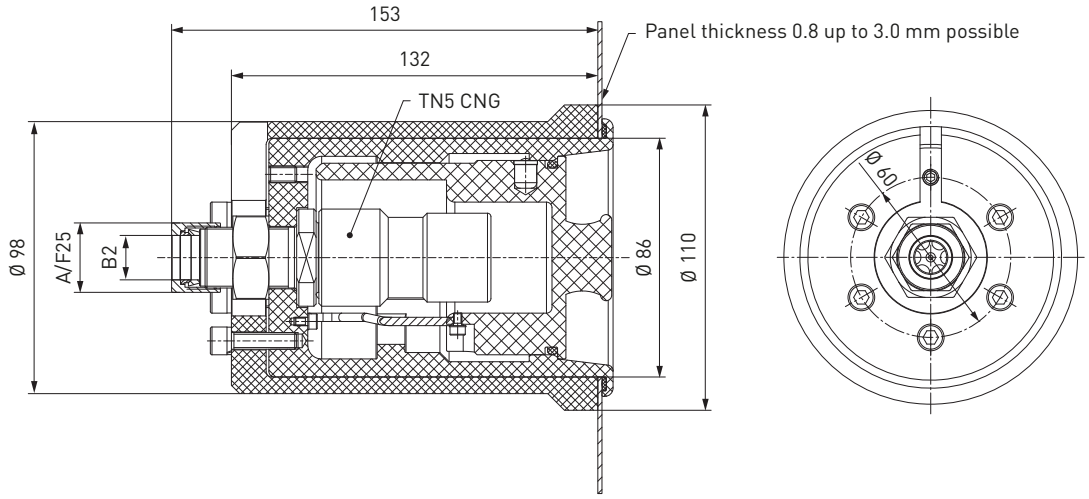

Part No.	Description	Pressure PS	B2
C1-62854	TS55 CNG (ECE)	260 bar / 3,700 psi	Tube Ø 16*
C1-62690	TS55 CNG (ECE) with starter cut-off switch	200 bar / 3,000 psi	Tube Ø 16*

* double ferrule fitting

Other connection sizes and version on request.

SPARE PARTS

Various parts are available as spares for the WEH® TS55 CNG Fueling system:

Part No.	Description
W84958	Fuel tank cap

» Check valve **TVR5 CNG**

DESCRIPTION

Features
- Robust construction
- Low-noise opening and closing
- Corrosion resistant stainless steel
- High leak tightness

Type TVR5 CNG is the largest of our check valves. It is most efficient and developed specifically for CNG buses and trucks. The check valve system is designed to minimize the effect of dirt particles on the sealing components within the unit. The WEH® TVR5 CNG check valve is constructed of corrosion-resistant stainless steel achieving a very durable unit due to its robust internal structure.

Application
Check valve for buses and trucks (ECE approval), also suitable for installation in fueling stations.
Only use check valves with ECE approval for fitment in road legal vehicles.

TECHNICAL DATA

Characteristics	Basic version
Technical nominal size	Depending on design
Nominal pressure	PN = 200 bar (3,000 psi) | PN = 250 bar (3,600 psi)
Max. allowable operating pressure	PS = 260 bar (ECE) (3,700 psi) | PS = 315 bar (4,500 psi)
Temperature range	-40 °C up to +120 °C (-40 °F up to +248 °F) (ECE) -40 °C up to +85 °C (-40 °F up to +185 °F)
Material	Corrosion resistant stainless steel
Sealing material	Natural gas resistant
Design	Incl. fittings (only for check valves with tube fitting)
Conformity / Tests / Approvals	ECE R110

Other designs available on request

» Check valve **TVR5 CNG**

ORDERING | WEH® TVR5 CNG Check valve with tube fitting on both sides

approx. dimensions (mm)

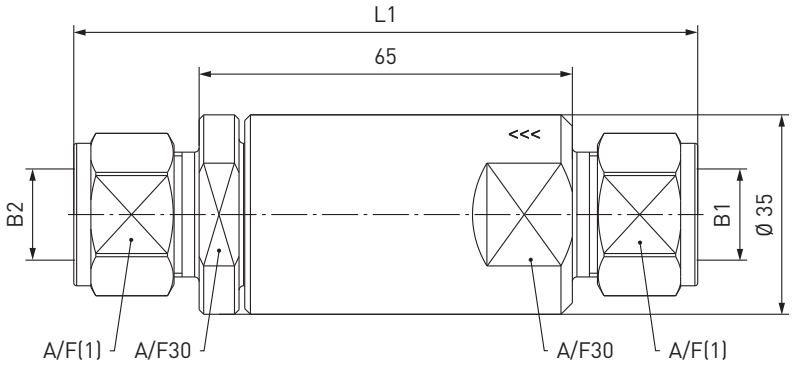

Part No.	Description	TNW	Pressure PS	B1	B2	L1	A/F(1)
C1-54787-X1	TVR5 CNG (ECE)	9 mm	260 bar / 3,700 psi	Tube Ø 12*	Tube Ø 12*	110	22
C1-76354-X01	TVR5 CNG	9 mm	350 bar / 5,000 psi	Tube Ø 12*	Tube Ø 12*	110	22
C1-41732-X1	TVR5 CNG (ECE)	12 mm	260 bar / 3,700 psi	Tube Ø 16*	Tube Ø 16*	110	25
C1-15506-X1-X01	TVR5 CNG	12 mm	350 bar / 5,000 psi	Tube Ø 16*	Tube Ø 16*	110	25

* double ferrule fitting

ORDERING | WEH® TVR5 CNG Check valve with female thread on both sides

approx. dimensions (mm)

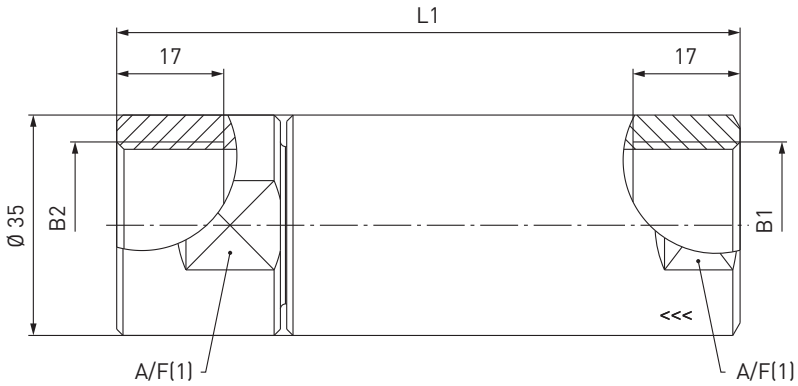

Part No.	Description	TNW	Pressure PS	B1 (female thread)	B2 (female thread)	L1	A/F(1)
C1-15507-X1-X01	TVR5 CNG	14 mm	350 bar / 5,000 psi	G3/4"*	G3/4"*	99	32

* acc. to ISO 228-1

Other connection sizes and versions on request.

» Filter **TSF1 CNG**

DESCRIPTION

Features
- For CNG free of impurities
- Prefilter for fueling nozzles
- For installation between fueling nozzle and filling hose

Contaminants in the gas flow can enter the vehicle's storage tank during refueling. These dirt particles in the natural gas fuel may cause damage to the sealing components. WEH, therefore, offers CNG filter for clean natural gas. Solid particles are captured reliably.
The TSF1 CNG filter is used for fueling stations and dispensers as well as onboard CNG powered vehicles. The filter is mainly installed as prefilter in the media inlet between fueling nozzle and filling hose.

Application
Filter for installation as prefilter between fueling nozzle and filling hose.
Only use filters with ECE approval for fitment in road legal vehicles.

TECHNICAL DATA

Characteristics	Basic version
Technical nominal size (TNW)	8 mm
Nominal pressure	PN = 200 bar (3,000 psi) | PN = 250 bar (3,600 psi)
Max. allowable operating pressure	PS = 260 bar (ECE) (3,700 psi) | PS = 315 bar (4,500 psi)
Temperature range	-40 °C up to +120 °C (-40 °F up to +248 °F) (ECE) -40 °C up to +85 °C (-40 °F up to +185 °F)
Material	Corrosion resistant stainless steel
Sealing material	Natural gas resistant
Filter element	50 resp. 40 µm, depending on design
Conformity / Tests / Approvals	ECE R110

Other designs available on request

» Filter **TSF1 CNG**

ORDERING | WEH® TSF1 CNG Filter (50 µm) with female thread on both sides

approx. dimensions (mm)

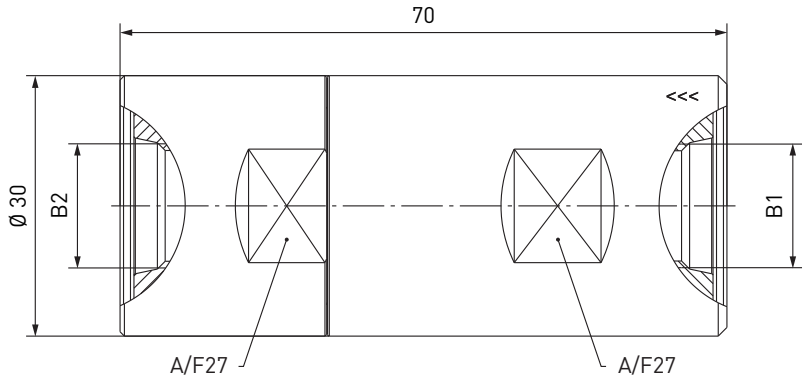

Part No.	Description	TNW	Pressure PS	B1 (female thread)	B2 (female thread)
C1-66532**	TSF1 CNG (ECE)	8 mm	260 bar / 3,700 psi	UNF 9/16"-18*	UNF 9/16"-18*

* acc. to SAE J1926-1
** The filter element can be removed and is re-usable after having been cleaned

ORDERING | WEH® TSF1 CNG Filter (40 µm) with male thread on both sides

approx. dimensions (mm)

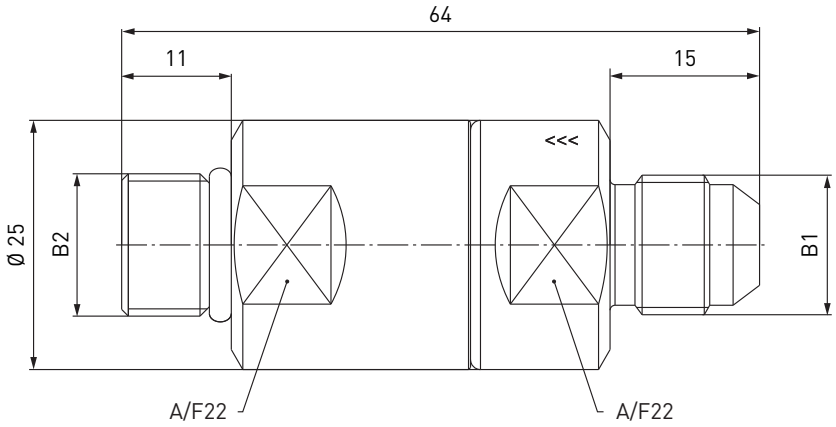

Part No.	Description	TNW	Pressure PS	B1 (male thread)	B2 (male thread)
C1-106854-X01	TSF1 CNG	8 mm	260 bar / 3,700 psi	UNF 9/16"-18*	UNF 9/16"-18**

* acc. to SAE J514, 37° cone
** acc. to SAE J1926-2

» Filter **TSF1 CNG**

ORDERING | WEH® TSF1 CNG Filter (40 µm) with female thread and male thread

approx. dimensions (mm)

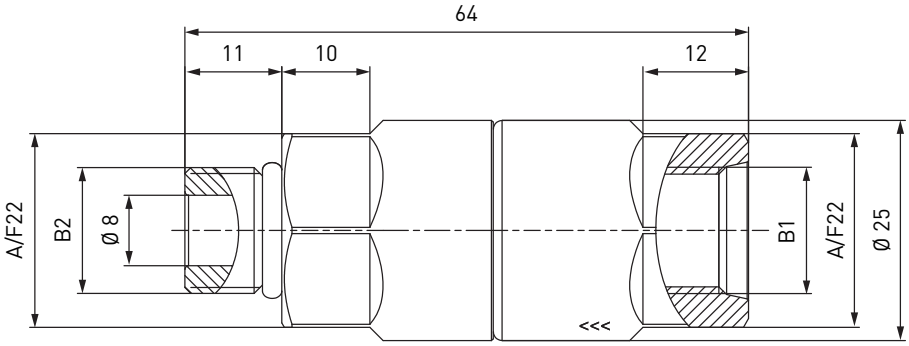

Part No.	Description	TNW	Pressure PS	B1 (female thread)	B2 (male thread)
C1-94070-X01	TSF1 CNG	8 mm	315 bar / 4,500 psi	UNF 9/16“-18*	UNF 9/16“-18*
C1-100700-X01	TSF1 CNG	8 mm	315 bar / 4,500 psi	UNF 9/16“-18-LH*	UNF 9/16“-18-LH*

* acc. to SAE J1926-2

» Filter **TSF1 CNG**

SPARE PARTS

Following parts are available as spares for the WEH® TSF1 CNG Filter:

Part No.	Description
W131848	Maintenance set consisting of o-ring, filter element and back-up ring (suitable for C1-66532)

» Filter **TSF2 CNG**

DESCRIPTION

Features
- For CNG free of impurities
- Filter insert can be cleaned
- For installation onboard CNG vehicles and in fueling stations

Contaminants in the gas flow can enter the vehicle's storage tank during refueling. These dirt particles in the natural gas fuel may cause damage to the sealing components. WEH, therefore, offers CNG filter for clean natural gas. Solid particles are captured reliably.
The filter element can be removed and is re-usable after having been cleaned.
The TSF2 CNG filter is mainly used for fueling stations and dispensers.

Application
Filter for installation onboard CNG vehicles and in fueling stations.
Only use filters with ECE approval for fitment in road legal vehicles.

TECHNICAL DATA

Characteristics	Basic version
Technical nominal size (TNW)	Depending on design
Nominal pressure	PN = 200 bar (3,000 psi)
Max. allowable operating pressure	PS = 300 bar (4,300 psi)
Temperature range	-40°C up to +85 °C (-40°F up to +185°F)
Material	Corrosion resistant stainless steel
Sealing material	Natural gas resistant
Filter element	40 µm, 50 µm, other designs on request
Design	Incl. fittings (only for filters with tube fitting)
Conformity / Tests / Approvals	ECE approval on request

Other designs available on request

» Filter **TSF2 CNG**

ORDERING | WEH® TSF2 CNG Filter (40 µm) with tube fitting on both sides

approx. dimensions (mm)

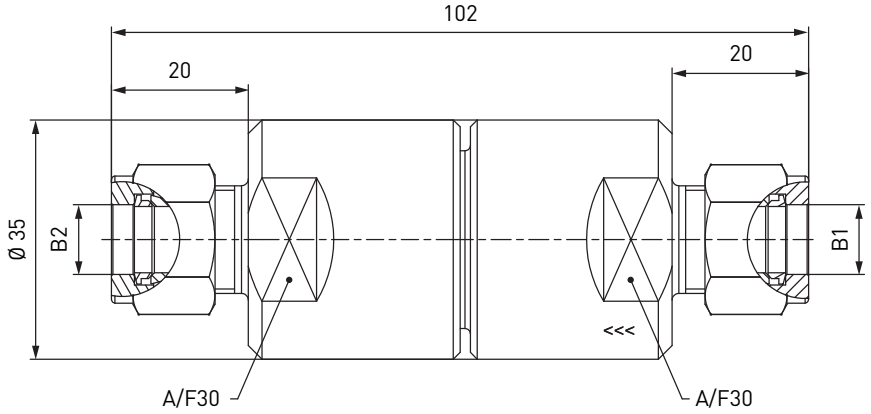

Part No.	Description	TNW	Pressure PS	B1	B2
C1-106736-X01	TSF2 CNG	5 mm	300 bar / 4,300 psi	Tube Ø 6*	Tube Ø 6*
C1-106746-X01	TSF2 CNG	6 mm	300 bar / 4,300 psi	Tube Ø 8*	Tube Ø 8*
on request	TSF2 CNG	8 mm	300 bar / 4,300 psi	Tube Ø 10*	Tube Ø 10*

* double ferrule fitting

ORDERING | WEH® TSF2 CNG Filter (40 µm) with female and male thread

approx. dimensions (mm)

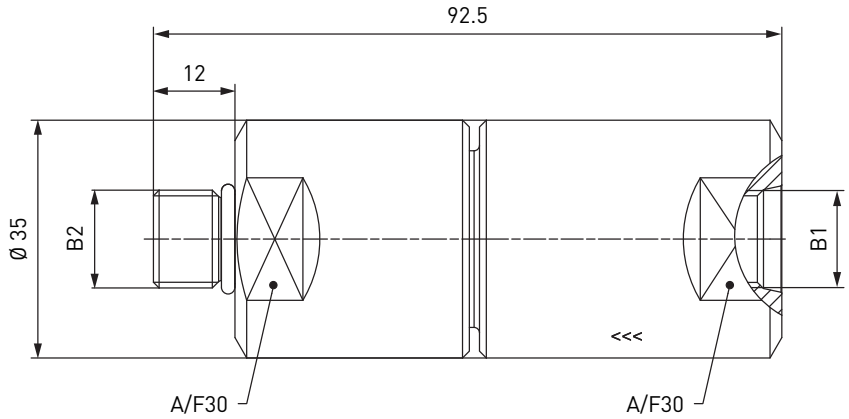

Part No.	Description	TNW	Pressure PS	B1 (female thread)	B2 (male thread)
C1-166464	TSF2 CNG	8 mm	300 bar / 4,300 psi	UNF 9/16"-18*	UNF 9/16"-18*

* acc. to SAE J1926-1

SPARE PARTS

Various parts are available as spares for the WEH® TSF2 CNG Filter:

Part No.	Description
E69-9061	Wire filter insert 40 µm (incl. spring and o-ring)

» Coalescing filter **TSF2 CNG**

DESCRIPTION

Features
- Fine filter with high particle removal efficiency (efficiency of approx. 99.9% > 0.3 µm)
- For installation onboard CNG vehicles and in fueling stations
- Protection of critical components in the fuel system
- Laterally offset flow possible
- Aluminum construction
- Ease of maintenance

Clean, filtered gases are essential to guarantee the proper function of components for vehicles and fueling stations when refueling with natural gas. The WEH® TSF2 CNG coalescing filter was developed to remove particles from the gas flow. When filtering the gas flow, the coalescing filter reliably removes contaminants such as oil, water and dirt particles which are contained in the gas. This contamination is isolated by the coalescing filter. Natural gas flows through the filter, whereas contaminants such as oil, water and other aerosols coalesce, and drop into the sump of the filter, where they are separated into a drain port.
The filters are easy to maintain and can be installed onboard vehicles and in fueling stations at any time.

Application
Coalescing filter for installation onboard CNG vehicles and in fueling stations.
Only use filters with ECE approval for fitment in road legal vehicles.

TECHNICAL DATA

Characteristics	Basic version
Technical nominal size (TNW)	Depending on design
Nominal pressure	PN = 200 bar (3,000 psi)
Max. allowable operating pressure	PS = 260 bar (ECE) (3,700 psi)
Temperature range	-40 °C up to +120 °C (-40 °F up to +248 °F) (ECE)
Material	Corrosion resistant Housing: aluminum
Sealing material	Natural gas resistant
Filter element	< 1 µm
Conformity / Tests / Approvals	ECE R110

Other designs available on request

» Coalescing filter **TSF2 CNG**

ORDERING | WEH® TSF2 CNG Coalescing filter with filter cartridge Ø 25.4 mm

approx. dimensions (mm)

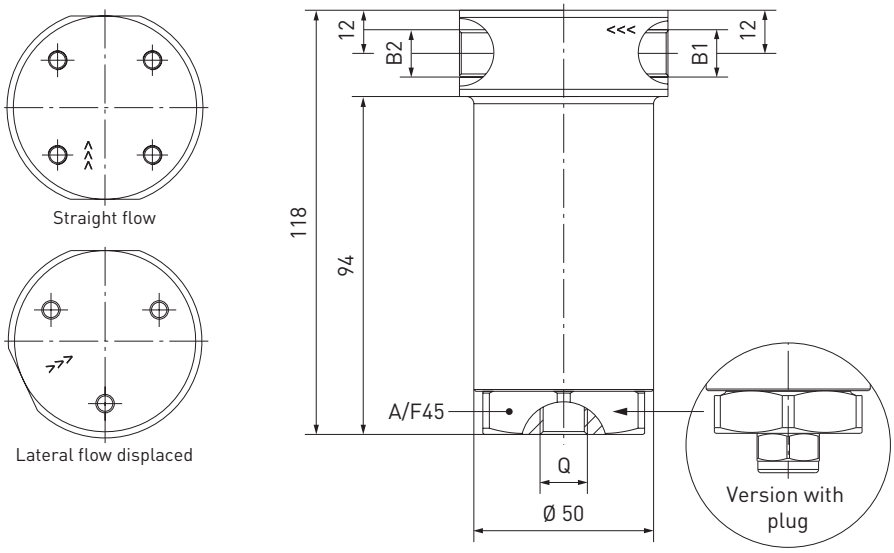

Part No.	Description	TNW	Pressure PS	B1 (female thread)	B2 (female thread)	Q (female thread)
C1-82999**	TSF2 CNG (ECE)	4 mm	260 bar / 3,700 psi	NPT 1/4"	NPT 1/4"	UNF 9/16"-18*
C1-79766**	TSF2 CNG (ECE)	4 mm	260 bar / 3,700 psi	UNF 9/16"-18*	UNF 9/16"-18*	UNF 9/16"-18*
C1-81722	TSF2 CNG (ECE)	4 mm	260 bar / 3,700 psi	G1/4"	G1/4"	G1/4"
C1-81766	TSF2 CNG (ECE)	4 mm	260 bar / 3,700 psi	G1/4"	G1/4" flow direction 115° RH	G1/4"

* acc. to SAE J1926-1
** incl. plug with o-ring

» Coalescing filter **TSF2 CNG**

ORDERING | WEH® TSF2 CNG Coalescing filter with filter cartridge Ø 19.3 mm

approx. dimensions (mm)

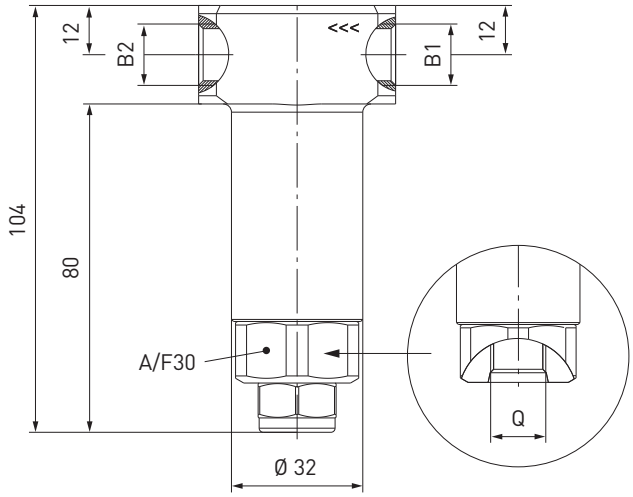

Part No.	Description	TNW	Pressure PS	B1 (female thread)	B2 (female thread)	Q (female thread)
C1-89582**	TSF2 CNG (ECE)	4 mm	260 bar / 3,700 psi	NPT 1/4"	NPT 1/4"	UNF 9/16"-18*

* acc. to SAE J1926-1
** incl. plug with o-ring

ORDERING | WEH® TSF2 CNG Coalescing filter with filter cartridge Ø 38.0 mm

approx. dimensions (mm)

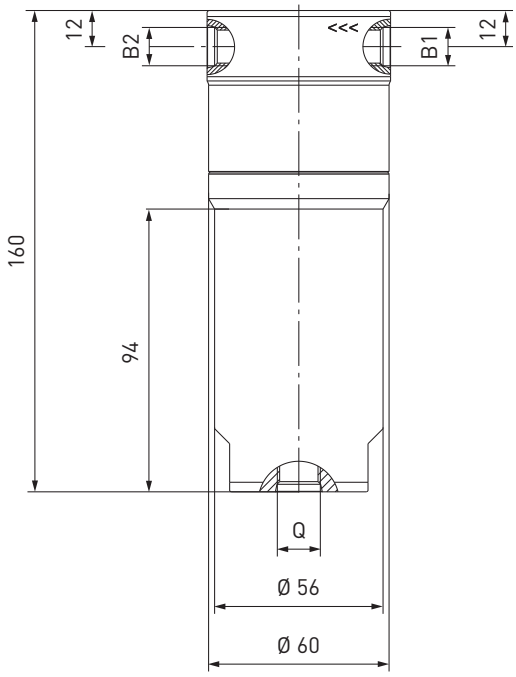

Part No.	Description	TNW	Pressure PS	B1 (female thread)	B2 (female thread)	Q (female thread)
C1-89633	TSF2 CNG (ECE)	10 mm	260 bar / 3,700 psi	UNF 9/16"-18*	UNF 9/16"-18*	UNF 9/16"-18*

* acc. to SAE J1926-1

» Coalescing filter **TSF2 CNG**

ACCESSORIES

The following accessories are available for the WEH® TSF2 CNG Coalescing filter:

Plug

Plug with o-ring for closing the drain port 'Q' (end of the filter).
Design: Plug incl. polyurethane o-ring

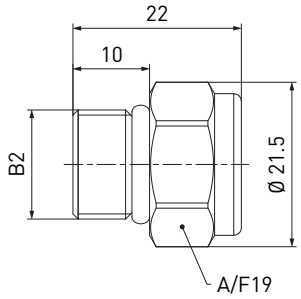

Part No.	Description	B2 (male thread)
E69-93336	Plug with o-ring	UNF 9/16"-18*
E69-108334	Plug with o-ring	G1/4"

* acc. to SAE J1926-1

Filter cartridge Ø 19.3

For TSF2 CNG with filter cartridge Ø 19.3 mm
Design: outer Ø 19.3 mm, inner Ø 12.5 mm

Part No.	Description	Length
E69-89541	for C1-89582	40.0 mm

Filter cartridge Ø 25.4

For TSF2 CNG with filter cartridge Ø 25.4 mm
Design: outer Ø 25.4 mm, inner Ø 12.5 mm

Part No.	Description	Length
E69-79770	for C1-82999, C1-81766, C1-81722, C1-79766	56.0 mm

Filter cartridge Ø 38.0

For TSF2 CNG with filter cartridge Ø 38.0 mm
Design: outer Ø 38.0 mm, inner Ø 22.5 mm

Part No.	Description	Length
E69-89626	for C1-89633	90.0 mm

» Filter **TSF4 CNG**

DESCRIPTION

Features
- For CNG free of impurities
- Filter insert can be cleaned
- For installation onboard CNG vehicles and in fueling stations

Contaminants in the gas flow can enter the vehicle's storage tank during refueling. These dirt particles in the natural gas fuel may cause damage to the sealing components. WEH, therefore, offers CNG filter for clean natural gas. Solid particles are captured reliably.
The filter element can be removed and is re-usable after having been cleaned.
The TSF4 CNG filter is mainly used for onboard CNG powered vehicles, but can also be used for fueling stations and dispensers.
Type TSF4 CNG round filter is available with tube fitting or female thread on both sides or male and female thread.

TSF4 CNG T-filter has been specially designed for use in CNG buses and trucks. The filter can be removed for cleaning purposes without tedious unscrewing of the media lines.

T-filter TSF4 CNG

Application
Filter for installation onboard CNG vehicles and in fueling stations.
Only use filters with ECE approval for fitment in road legal vehicles.

TECHNICAL DATA

Characteristics	Basic version
Technical nominal size (TNW)	Depending on design
Nominal pressure	PN = 200 bar (3,000 psi)
Max. allowable operating pressure	Depending on design
Temperature range	-40°C up to +120°C (-40°F up to +248°F) (ECE) -40°C up to +85°C (-40°F up to +185°F)
Material	Corrosion resistant stainless steel
Sealing material	Natural gas resistant
Filter element	40 resp. 10 µm, depending on design
Design	Incl. fittings (only for filters with tube fitting)
Conformity / Tests / Approvals	ECE R110

Other designs available on request

» Filter **TSF4 CNG**

ORDERING | WEH® TSF4 CNG Round filter (40 µm) with tube fitting on both sides

approx. dimensions (mm)

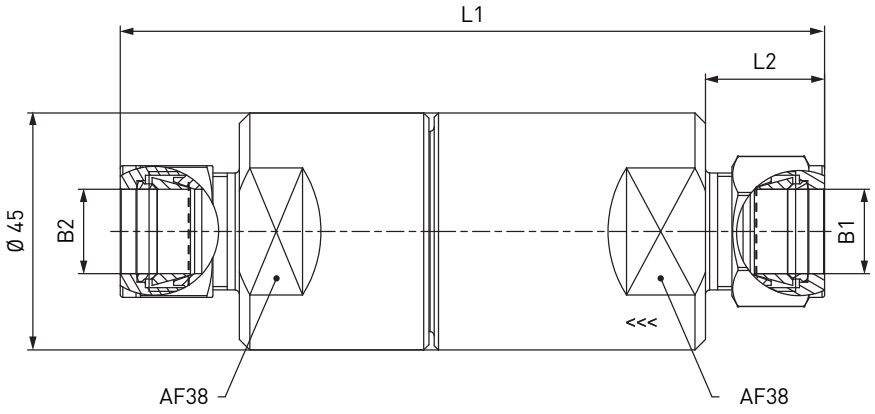

Part No.	Description	TNW	Pressure (PS)	B1	B2	L1	L2
C1-106765-X01	TSF4 CNG	8 mm	300 bar / 4,300 psi	Tube Ø 10*	Tube Ø 10*	129	20
on request	TSF4 CNG	10 mm	300 bar / 4,300 psi	Tube Ø 12*	Tube Ø 12*	133	22
C1-16843-X01	TSF4 CNG	12 mm	300 bar / 4,300 psi	Tube Ø 16*	Tube Ø 16*	134	23

* double ferrule fitting

ORDERING | WEH® TSF4 CNG Round filter (40 µm) with female thread on both sides

approx. dimensions (mm)

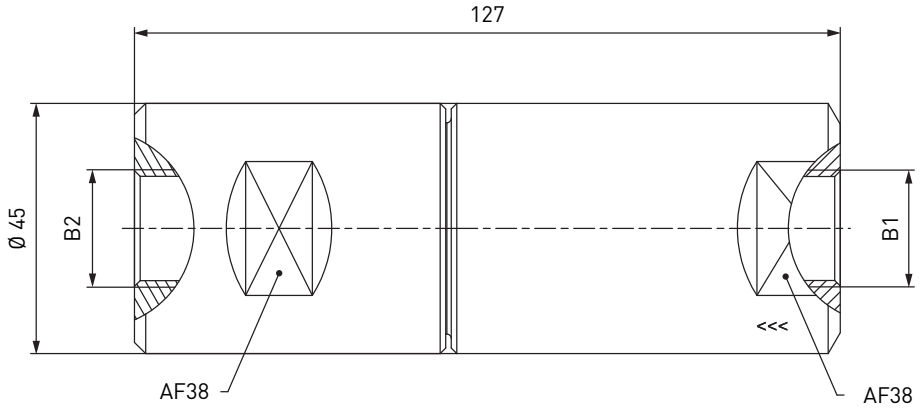

Part No.	Description	TNW	Pressure (PS)	B1 (female thread)	B2 (female thread)
C1-50371-X01	TSF4 CNG	12 mm	300 bar / 4,300 psi	G1/2"	G1/2"

» Filter **TSF4 CNG**

ORDERING | WEH® TSF4 CNG Round filter (40 µm) with male and female thread

approx. dimensions (mm)

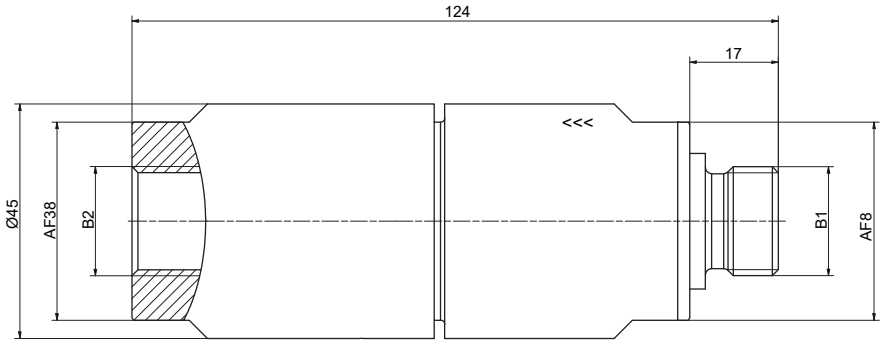

Part No.	Description	TNW	Pressure PS	B1 (male thread)	B2 (female thread)
C1-188984	TSF4 CNG	12 mm	300 bar / 4,300 psi	G1/2"	G1/2"

ORDERING | WEH® TSF4 CNG T-filter (40 µm) with female thread on both sides

approx. dimensions (mm)

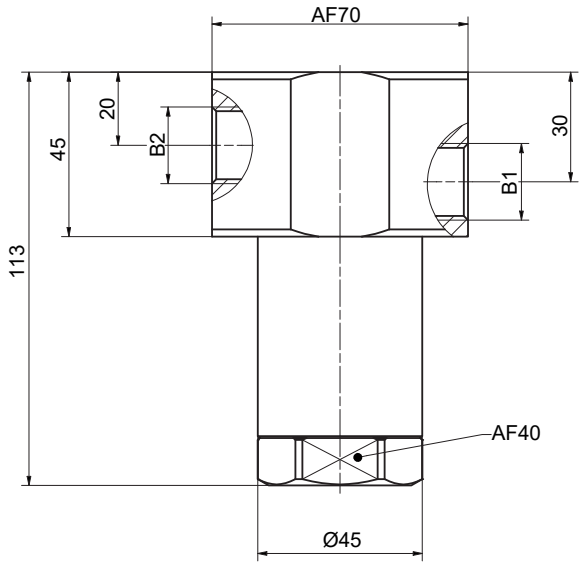

Part No.	Description	TNW	Pressure PS	B1 (female thread)	B2 (female thread)
C1-83168	TSF4 CNG (ECE)	12 mm	260 bar / 3,700 psi	G1/2"	G1/2"

» Filter **TSF4 CNG**

ORDERING | WEH® TSF4 CNG T-filter with tube fitting on both sides

approx. dimensions (mm)

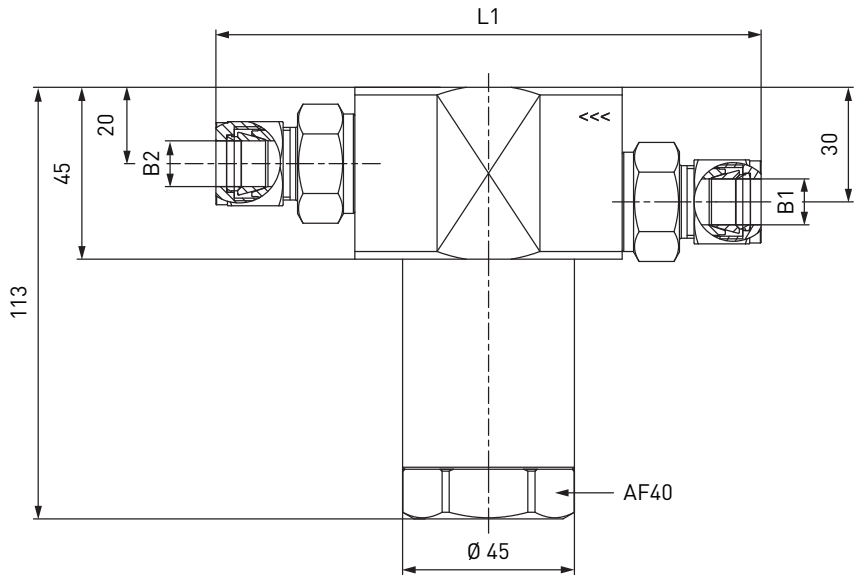

Part No.	Description	Filter (µm)	TNW	Pressure PS	B1	B2	L1
C1-54023	TSF4 CNG (ECE)	10	8 mm	260 bar / 3,700 psi	Tube Ø 10*	Tube Ø 10*	140
C1-86825	TSF4 CNG (ECE)	10	10 mm	260 bar / 3,700 psi	Tube Ø 12*	Tube Ø 12*	143
C1-106811	TSF4 CNG (ECE)	10	12 mm	260 bar / 3,700 psi	Tube Ø 1/2"*	Tube Ø 1/2"*	144
C1-106812	TSF4 CNG (ECE)	40	12 mm	260 bar / 3,700 psi	Tube Ø 16*	Tube Ø 16*	144
C1-51178-X01	TSF4 CNG	10	12 mm	300 bar / 4,300 psi	Tube Ø 16*	Tube Ø 16*	144

* double ferrule fitting

SPARE PARTS

Various parts are available as spares for the WEH® TSF4 CNG Filter:

Part No.	Description
W9062	Wire filter insert 40 µm (incl. spring and o-ring)
W9063	Wire filter insert 10 µm (incl. spring and o-ring)
E51-47589	O-ring for filter insert (only T-filter)

» Filter **TSF5 CNG**

DESCRIPTION

Features
- For CNG free of impurities
- Filter insert can be cleaned
- Prefilter for inline breakaways
- For installation between inline breakaway and filling hose

Contaminants in the gas flow can enter the vehicle's storage tank during refueling. These dirt particles in the natural gas fuel may cause damage to the sealing components. WEH, therefore, offers CNG filter for clean natural gas. Solid particles are captured reliably.
The TSF5 CNG filter is used for fueling stations as well as for dispensers. The filter is mainly installed as prefilter in the media inlet between inline breakaway coupling and filling hose.

Application
Filter for installation as prefilter between inline breakaway coupling and filling hose.

TECHNICAL DATA

Characteristics	Basic version
Technical nominal size (TNW)	Depending on design
Nominal pressure	PN = 200 bar (3,000 psi) | PN = 250 bar (3,600 psi)
Max. allowable operating pressure	PS = 300 bar (4,300 psi) | PS = 350 bar (5,000 psi)
Temperature range	-40°C up to +85°C (-40°F up to +185°F)
Material	Corrosion resistant stainless steel
Sealing material	Natural gas resistant
Filter element	50 µm

Other designs available on request

» Filter **TSF5 CNG**

ORDERING | WEH® TSF5 CNG Filter (50 µm) with male and female thread

approx. dimensions (mm)

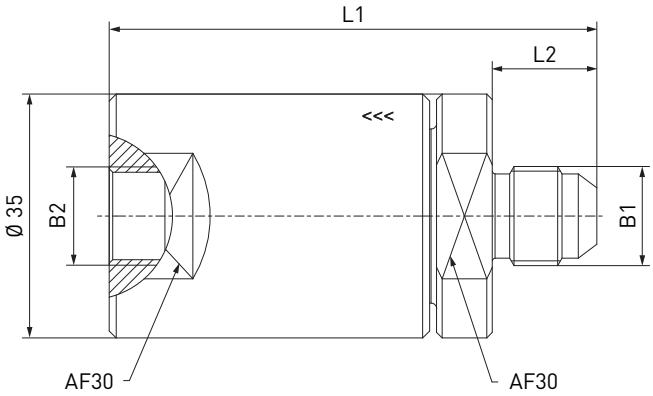

Part No.	Description	TNW	Pressure PS	B1 (male thread)	B2 (female thread)	L1	L2
C1-83120-X01	TSF5 CNG	8 mm	300 bar / 4,300 psi	UNF 9/16"-18*	UNF 9/16"-18*	70	15
C1-102491-X01	TSF5 CNG	8 mm	350 bar / 5,000 psi	UNF 9/16"-18*	UNF 9/16"-18*	70	15
C1-105923-X01	TSF5 CNG	12 mm	300 bar / 4,300 psi	UNF 7/8"-14*	UNF 7/8"-14*	75	19.5

* acc. to SAE J514, 37° cone

SPARE PARTS

Various parts are available as spares for the WEH® TSF5 CNG Filter:

Part No.	Description
E50-127236	O-ring
E55-247A	Back-up ring
E80-31704	Filter element

» Defueling nozzle **TK23 CNG**

DESCRIPTION

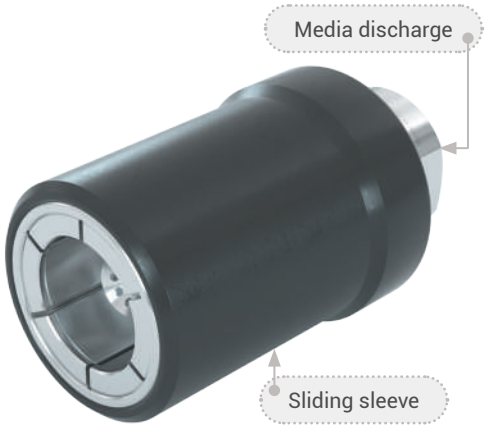

Features
- Push-Pull actuation
- Extremely high flow rate
- Plastic thermal protection
- WEH® Jaw locking mechanism
- High-grade materials
- Compact design
- Only suitable for special WEH® TN5 CNG Receptacles without filter

The WEH® TK23 CNG Defueling nozzle is designed specifically for discharging CNG of cylinder bundles (e.g. on trailers).

The TK23 CNG is equipped with a pin, which opens the check valve in the WEH® TN5 CNG Receptacle and releases the flow. Now the natural gas can be discharged from the cylinder bundles. Connecting and disconnecting can only occur in depressurized condition. The defueling nozzle is not equipped with an integrated shut-off valve.

The WEH® TK23 CNG is only suitable for special WEH® TN5 CNG Receptacles without filter (see accessories).

Application
Defueling nozzle for discharging of CNG only to be used with special WEH® TN5 CNG Receptacles without filter.
Operation only by specially trained service personnel. Not for self-service operation!
Attention: The TK23 CNG may not be used for filling!

TECHNICAL DATA

Characteristics	Basic version
Technical nominal size (TNW)	Depending on design
Nominal pressure	PN = 250 bar (3,600 psi)
Max. allowable operating pressure	PS = 350 bar (5,000 psi)
Temperature range	-40°C bis +85°C (-40°F up to +185°F)
Material	Corrosion resistant
Sealing material	Natural gas resistant
Design	TK23 CNG: With plastic thermal protection TN5 CNG: Incl. fittings (only for nozzles with tube fitting)
Weight	Approx. 1 kg (2.20 lbs.)

Other designs available on request

» Defueling nozzle **TK23 CNG**

ORDERING | WEH® TK23 CNG Defueling nozzle

approx. dimensions (mm)

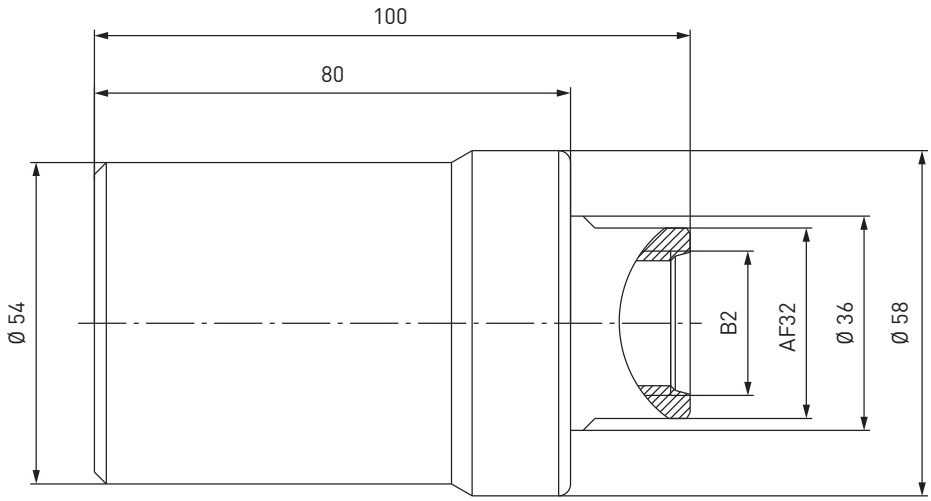

Part No.	Description	TNW	Pressure PS	B2 (female thread)
C1-101404-X01	TK23 CNG	10 mm	350 bar / 5,000 psi	UNF 7/8"-14*

* acc. to SAE J1926-1

ACCESSORIES

The following accessories are available for the WEH® TK23 CNG Defueling nozzle:

WEH® TN5 CNG Receptacle with female thread (without filter) for TK23 CNG

approx. dimensions (mm)

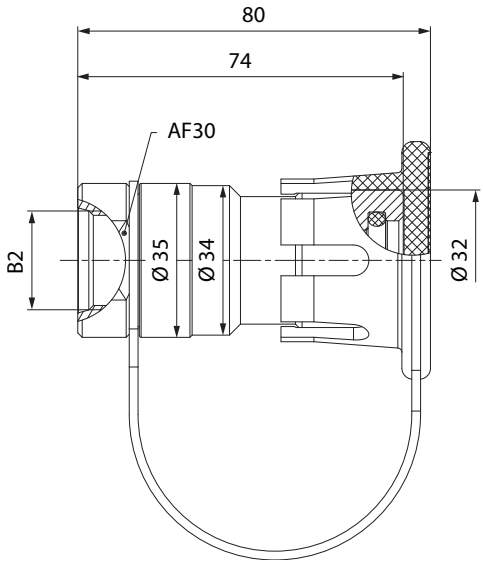

Part No.	Description	TNW	Pressure PS	B2 (female thread)
C1-113499-X01	TN5 CNG	12 mm	315 bar / 4,500 psi	UNF 7/8"-14*

* acc. to SAE J1926-1

» Defueling nozzle **TK23 CNG**

WEH® TN5 CNG Receptacle with male thread (without filter) for TK23 CNG

approx. dimensions (mm)

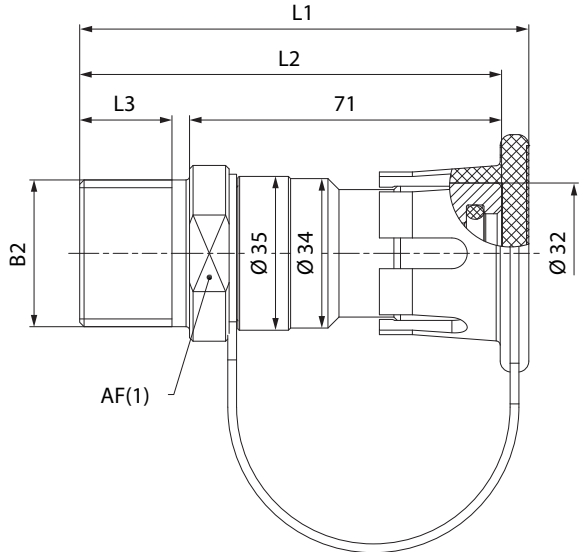

Part No.	Description	TNW	Pressure PS	B2 (male thread)	L1	L2	L3	AF(1)
on request	TN5 CNG	12 mm	315 bar / 4,500 psi	NPT 1/2“	97	91	16	30
C1-101945-X01	TN5 CNG	12 mm	315 bar / 4,500 psi	NPT 1“	102	96	21	36

WEH® TN5 CNG Receptacle with tube fitting (without filter) for TK23 CNG

approx. dimensions (mm)

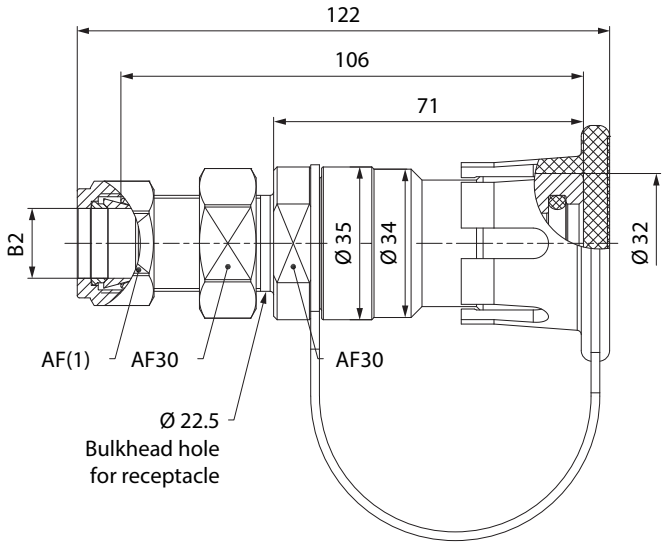

Part No.	Description	TNW	Pressure PS	B2	AF(1)
on request	TN5 CNG	10 mm	315 bar / 4,500 psi	Tube Ø 12*	22
C1-112803-X01	TN5 CNG	12 mm	315 bar / 4,500 psi	Tube Ø 16*	25

* double ferrule fitting
Incl. fittings

» Defueling nozzle **TK23 CNG**

Filling hoses

Filling hoses for connection to the defueling nozzle, complete with fittings and press-fittings supported by coil spring stubs.

Part No.	B1/B2 (female thread)	Hose length
E68-1033-3000	UNF 7/8"-14*	3 m
E68-1033-4000	UNF 7/8"-14*	4 m
E68-1033-5000	UNF 7/8"-14*	5 m

* acc. to SAE J514, 37° cone

Fittings

Stainless steel fittings for connecting port 'B2' of the defueling nozzle to the hose.

Part No.	Description	Connection defueling nozzle	Connection hose
W6703	Fitting	UNF 7/8"-14* male thread	UNF 7/8"-14** male thread

* acc. to SAE J1926-1
** acc. to SAE J514, 37° cone

A detailed overview of all available screw connections is available on request.

Spare parts

Various parts are available as spares for the TK23 CNG defueling nozzle.

Part No.	Description
W136121	1 Spare parts set TK23 CNG (sliding sleeve incl. metal sleeve and circlip)
on request	Maintenance spray

» Defueling nozzle **TK6 CNG** for cars

DESCRIPTION

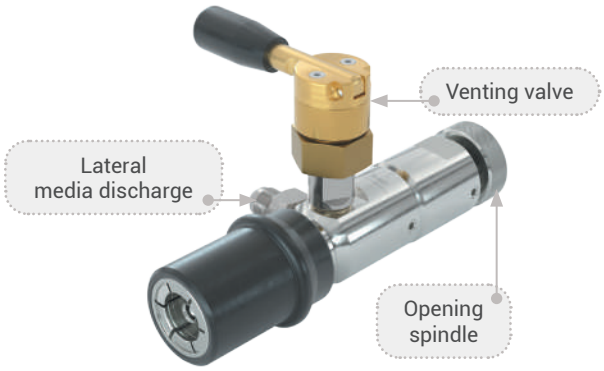

Features
- Discharge through the filling receptacle
- Opening spindle actuation
- No additional locking device required
- Version with and without venting valve
- Plastic thermal protection
- Only suitable for special WEH® TN1 CNG Receptacles without filter

Cars running on natural gas have to be serviced and checked regularly, a process involving the discharge of their pressurized fuel tanks. The WEH® TK6 CNG Defueling nozzle has been designed for this specific purpose.

The defueling nozzle is simply engaged onto the WEH® TN1 CNG Receptacle of the car and the opening spindle fully turned until the receptacle is fully open. Discharge can now take place through the lateral media discharge.

Application
Defueling nozzle for discharging of CNG fuel tanks of cars through the filling receptacle. Only to be used with special WEH® TN1 CNG Receptacles without filter. Please contact us!
Operation only by specially trained personnel. Not for self-service operation!
Attention: The TK6 CNG may not be used for filling!

TECHNICAL DATA

Characteristics	Basic version
Technical nominal size (TNW)	6 mm
Nominal pressure	PN = 250 bar (3,600 psi)
Max. allowable operating pressure	PS = 350 bar (5,000 psi)
Temperature range	-40 °C up to +85 °C (-40 °F up to +185 °F)
Material	Corrosion resistant
Sealing material	Natural gas resistant
Design	With plastic thermal protection, opening spindle and with or without venting valve
Weight	Approx. 1.2 kg (2.65 lbs.) with venting valve resp. approx. 1 kg (2.20 lbs.) without venting valve

Other designs available on request

» Defueling nozzle **TK6 CNG** for cars

ORDERING | WEH® TK6 CNG Defueling nozzle with venting valve

approx. dimensions (mm)

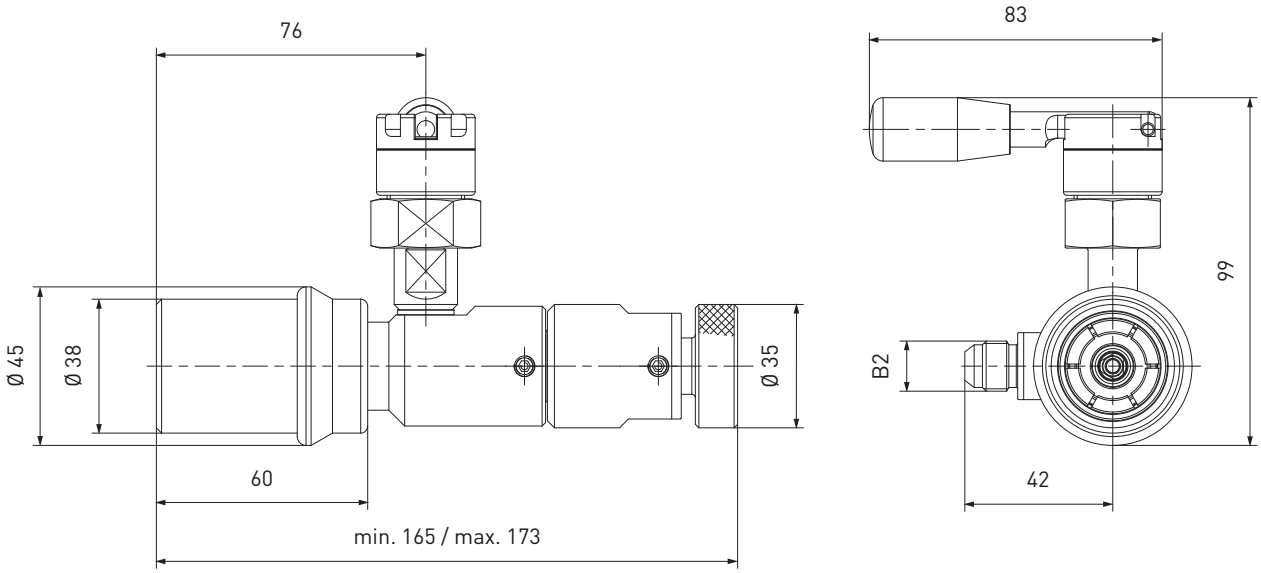

Part No.	Description	Pressure PS	B2 (male thread)
C1-111166-X01	TK6 CNG	350 bar / 5,000 psi	UNF 9/16"-18*

* acc. to SAE J514, 37° cone

ORDERING | WEH® TK6 CNG Defueling nozzle without venting valve

approx. dimensions (mm)

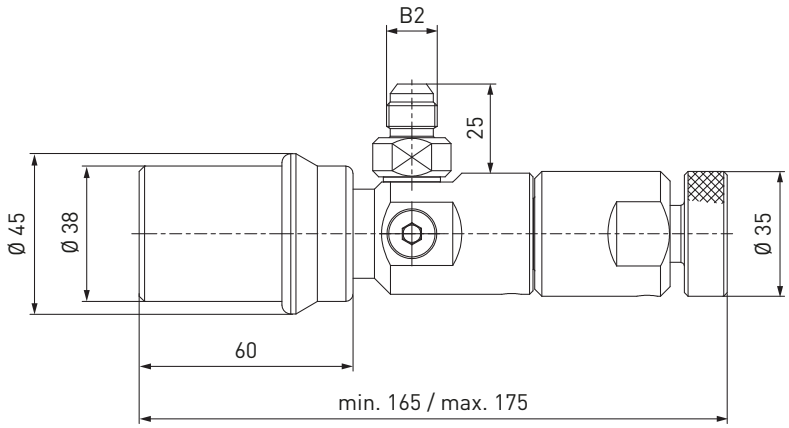

Part No.	Description	Pressure PS	B2 (male thread)
C1-105544-X01	TK6 CNG	350 bar / 5,000 psi	UNF 9/16"-18*

* acc. to SAE J514, 37° cone

» Defueling nozzle **TK6 CNG** for cars

ACCESSORIES

The following accessories are available for the WEH® TK6 CNG Defueling nozzle:

Filling hoses

Filling hoses for connection to the defueling nozzle, complete with fittings and press-fittings supported by coil spring stubs.

Part No.	B1/B2 (female thread)	Hose length
E68-1031-3000	UNF 9/16"-18*	3 m
E68-1031-4000	UNF 9/16"-18*	4 m
E68-1031-5000	UNF 9/16"-18*	5 m

* acc. to SAE J514, 37° cone

» Defueling nozzle **TK6 CNG** for cars

Spare parts

Various parts are available as spares for the TK6 CNG defueling nozzle.

Part No.	Description
on request	Maintenance spray

» Defueling nozzle **TK21 CNG** for buses and trucks

DESCRIPTION

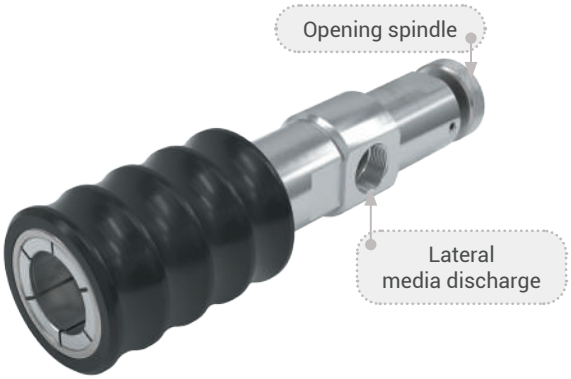

Features
- Discharge through the filling receptacle
- Opening spindle actuation
- No additional locking device required
- Plastic thermal protection
- Only suitable for WEH® TN5 CNG Receptacles without filter

Buses and trucks running on natural gas have to be serviced and checked regularly, a process involving the discharge of their pressurized fuel tanks. The WEH® TK21 CNG Defueling nozzle has been designed for this specific purpose.

The defueling nozzle is simply engaged onto the WEH® TN5 CNG Receptacle of the bus or truck and the opening spindle fully turned until the receptacle is fully open. Discharge can now take place through the lateral media discharge.

Application
Defueling nozzle for discharging of CNG fuel tanks of buses and trucks through the filling receptacle. Only to be used with WEH® TN5 CNG Receptacles without filter. Operation only by specially trained personnel. Not for self-service operation!
Attention: The TK21 CNG may not be used for filling!

TECHNICAL DATA

Characteristics	Basic version
Technical nominal size (TNW)	8 mm
Nominal pressure	PN = 250 bar (3,600 psi)
Max. allowable operating pressure	PS = 350 bar (5,000 psi)
Temperature range	-40°C up to +85°C (-40 °F up to +185 °F)
Material	Corrosion resistant
Sealing material	Natural gas resistant
Design	With plastic thermal protection and opening spindle
Weight	Approx. 2.1 kg (4.63 lbs.)

Other designs available on request

» Defueling nozzle **TK21 CNG** for buses and trucks

ORDERING | WEH® TK21 CNG Defueling nozzle

approx. dimensions (mm)

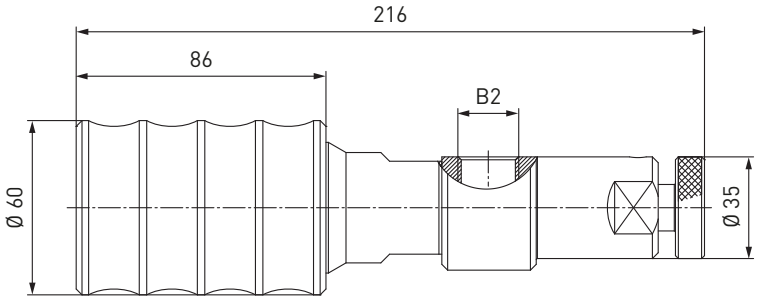

Part No.	Description	Pressure PS	B2 (female thread)
C1-12641-X2-X01	TK21 CNG	350 bar / 5,000 psi	G1/2"*

* acc. to DIN 3852-2

ACCESSORIES

The following accessories are available for the WEH® TK21 CNG Defueling nozzle:

Filling hoses

Filling hoses for connection to the defueling nozzle, complete with fittings and press-fittings supported by coil spring stubs.

Part No.	B1/B2 (female thread)	Hose length
E68-1033-3000	UNF 7/8"-14*	3 m
E68-1033-4000	UNF 7/8"-14*	4 m
E68-1033-5000	UNF 7/8"-14*	5 m

* acc. to SAE J514, 37° cone

Fittings

Stainless steel fittings for connecting port 'B2' of the defueling nozzle to the hose.

Part No.	Description	Connection defueling nozzle	Connection hose
W61524	Fitting	G1/2"* male thread	UNF 7/8"-14** male thread

* acc. to DIN 3852-2
** acc. to SAE J514, 37° cone

A detailed overview of all available screw connections is available on request.

Spare parts

Various parts are available as spares for the TK21 CNG defueling nozzle.

Part No.	Description
on request	Maintenance spray

» Emergency fueling set **TZ21 CNG** for cars

DESCRIPTION

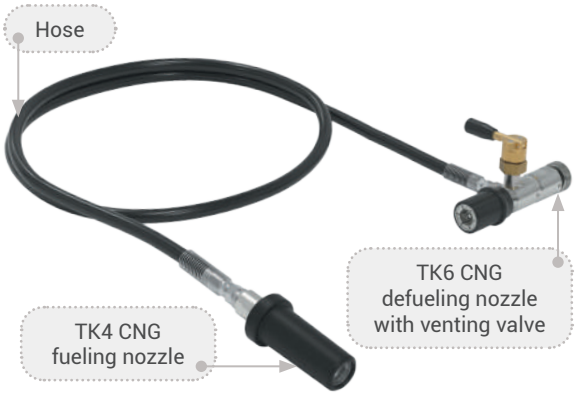

Features
- Refueling of broken down CNG cars with bi-fuelled service vehicles or mobile natural gas cylinders
- Only suitable for special WEH® TN1 CNG Receptacles (without filter)
- Consisting of WEH® TK4 CNG Fueling nozzle, WEH® TK6 CNG defueling nozzle with integrated venting valve, hose and fittings
- Colour coding (200 bar / 3,000 psi black, 250 bar / 3,600 psi yellow)

The components for conversion of the service vehicle are NOT included in this fueling set!

A bi-fuelled (CNG and petrol) vehicle is equipped with a bypass with ball valve. Its manual operation circumvents the internal check valve in front of the pressure vessel (natural gas tank). This subsequent conversion can be effected without problems by any vehicle converter. The CNG tank of the service vehicle will be refuelled at the CNG fueling station. The service vehicle running for this purpose on petrol, drives to the broken down mono-fuelled vehicle. The broken down vehicle can be refuelled locally using the WEH® TZ21 CNG emergency fueling set.

The TK6 CNG defueling nozzle is placed onto the receptacle of the service vehicle. The TK4 CNG fueling nozzle is connected to the broken down vehicle. Both vehicles are connected with a hose to each other. By rotating the opening spindle at the TK6 CNG defueling nozzle the check valve of the WEH® TN1 CNG Receptacle opens. The ball valve at the bypass of the service vehicle is opened slowly. At the TK4 CNG fueling nozzle the natural gas is lead into the empty tank. After refueling the ball valve at the bypass of the service vehicle is closed. The opening spindle of the TK6 CNG defueling nozzle is rotated back and the check valve of the WEH® TN1 CNG Receptacle is closed. Then the integrated venting valve at the TK6 CNG vents the TZ21 CNG emergency fueling set. The TK6 CNG defueling nozzle and the TK4 CNG fueling nozzle can be removed. Now the monofuelled CNG vehicle can drive away with a refuelled CNG tank.

Note
A special WEH® TN1 CNG Receptacle (without filter) has to be installed at the service vehicle for proper function.
Please contact us!

Application
Emergency fueling set for refueling cars from a service vehicle.
Only to be used by specially trained service personnel. Not for self-service operation!

TECHNICAL DATA

Characteristics	Basic version	
Technical nominal size (TNW)	6 mm	
Nominal pressure	P30 acc. to ANSI NGV1 / B200 acc. to ISO 14469 PN = 200 bar (3,000 psi)	P36 acc. to ANSI NGV1 / B250 acc. to ISO 14469 PN = 250 bar (3,600 psi)
Max. allowable operating pressure	PS = 300 bar (4,300 psi)	PS = 350 bar (5,000 psi)
Temperature range	-40 °C up to +85 °C (-40 °F up to +185 °F)	
Material	Corrosion resistant	
Sealing material	Natural gas resistant	
Design	Consisting of TK4 CNG fueling nozzle, TK6 CNG defueling nozzle with venting valve, hose (3 m or 5 m) and fittings	

Other designs available on request

» Emergency fueling set **TZ21 CNG** for cars

ORDERING | WEH® TZ21 CNG Emergency fueling set

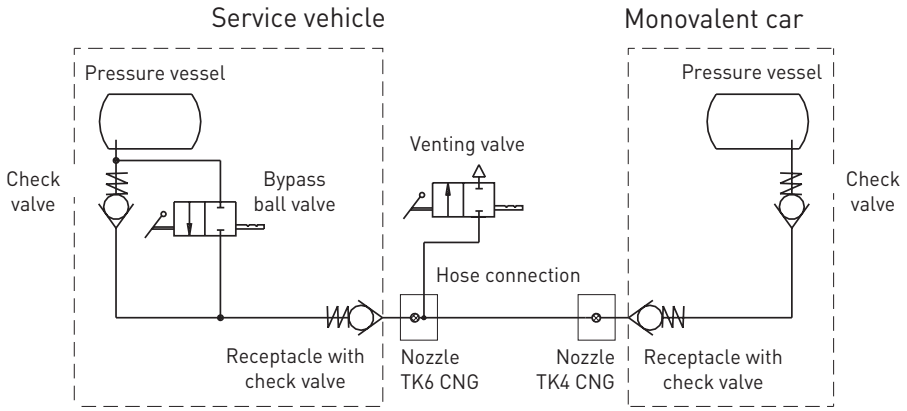

Part No.	Description	Hose length	Pressure PS
C1-126022	TZ21 CNG	3 m	350 bar / 5,000 psi
C1-126021-X01	TZ21 CNG	5 m	300 bar / 4,300 psi
C1-126023	TZ21 CNG	5 m	350 bar / 5,000 psi

ACCESSORIES

The following accessories are available for the WEH® TZ21 CNG Emergency fueling set:

Bypass

Bypass set for installation at the service vehicle, consisting of a 2-way ball valve and a TVR1 CNG check valve.

Part No.	Description
on request	Bypass set with tube Ø 6 mm

Spare parts

Various parts are available as spares for the TZ21 CNG emergency fueling set.

Part No.	Description
W132266	Spare parts set TK4 CNG 200 bar / 3,000 psi (black sliding sleeve incl. disc and 3 screws)
W132267	Spare parts set TK4 CNG 250 bar / 3,600 psi (yellow sliding sleeve incl. disc and 3 screws)
on request	Maintenance spray

» Emergency fueling set **TZ22 CNG** for buses and trucks

DESCRIPTION

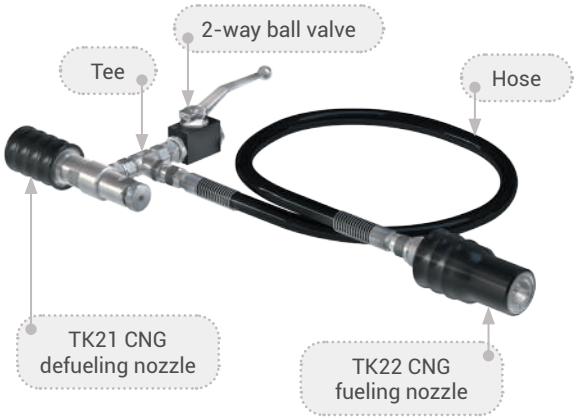

Features
- Refueling of broken down CNG buses or trucks with bi-fuelled service vehicles
- Only suitable for WEH® TN5 CNG Receptacles (without filter)
- Consisting of WEH® TK22 CNG fueling nozzle, WEH® TK21 CNG defueling nozzle, 2-way ball valve, hose and fittings

The components for conversion of the service vehicle are NOT included in this fueling set!

A bi-fuelled (CNG and petrol) vehicle is equipped with a bypass with ball valve. Its manual operation circumvents the internal check valve in front of the pressure vessel (natural gas tank). This subsequent conversion can be effected without problems by any vehicle converter. The CNG tank of the service vehicle will be refuelled at the CNG fueling station. The service vehicle running for this purpose on petrol, drives to the broken down mono-fuelled vehicle. The broken down vehicle can be refuelled locally using the WEH® TZ22 CNG emergency fueling set.

The TK21 CNG defueling nozzle is placed onto the receptacle of the service vehicle. The TK22 CNG fueling nozzle is connected to the broken down vehicle. Both vehicles are connected with a hose to each other. By rotating the opening spindle at the TK21 CNG defueling nozzle the check valve of the WEH® TN5 CNG Receptacle opens. The ball valve at the bypass of the service vehicle is opened slowly. At the TK22 CNG fueling nozzle the natural gas is lead into the empty tank. After refueling the ball valve at the bypass of the service vehicle is closed. The opening spindle of the TK21 CNG defueling nozzle is rotated back and the check valve of the WEH® TN5 CNG Receptacle is closed. Then the system is vented by actuating the 2-way ball valve. The TK21 CNG defueling nozzle and the TK22 CNG fueling nozzle can be removed.
Now the monofuelled CNG vehicle can drive away with a refuelled CNG tank.

Note
A WEH® TN5 CNG Receptacle (without filter) has to be installed at the service vehicle for proper function.

Application
Emergency fueling set for refueling buses and trucks from a service vehicle.
Only to be used by specially trained service personnel. Not for self-service operation!

TECHNICAL DATA

Characteristics	Basic version
Technical nominal size (TNW)	8 mm
Nominal pressure	P30HD acc. to ANSI NGV1 / C200 acc. to ISO 14469 PN = 200 bar (3,000 psi)
Max. allowable operating pressure	PS = 300 bar (4,300 psi)
Temperature range	-40 °C up to +85 °C (-40 °F up to +185 °F)
Material	Corrosion resistant
Sealing material	Natural gas resistant
Design	Consisting of TK22 CNG fueling nozzle, TK21 CNG defueling nozzle, 2-way ball valve, hose (5 m) and fittings

Other designs available on request

» Emergency fueling set **TZ22 CNG** for buses and trucks

ORDERING | WEH® TZ22 CNG Emergency fueling set

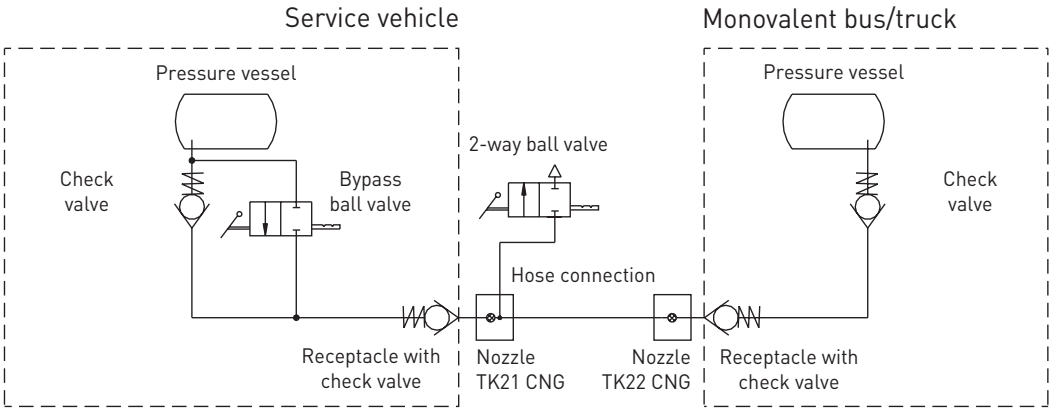

Part No.	Description	Hose length	Pressure PS
C1-68558-X1-X01	TZ22 CNG	5 m	300 bar / 4,300 psi

ACCESSORIES

The following accessories are available for the WEH® TZ22 CNG Emergency fueling set:

Bypass

Bypass set for installation at the service vehicle, consisting of a 2-way ball valve and a TVR1 CNG check valve.

Part No.	Description
on request	Bypass set with tube Ø 6 mm

Spare parts

Various parts are available as spares for the TZ22 CNG emergency fueling set.

Part No.	Description
W127951	Spare parts set TK22 CNG 200 bar / 3,000 psi (grip sleeve incl. metal sleeve and circlip)
on request	Maintenance spray

CNG hoses

DESCRIPTION

Features
- Coil spring stubs on both sides
- Different lengths available
- Permanently bonded hoses possible
- Tailor-made according to customers‘ specifications

We also offer filling and venting hoses with press-fittings supported by coil spring stubs for connecting fueling nozzle and breakaway coupling or dispenser. The hoses are available with the appropriated fittings. The filling and venting hoses can be delivered in different standard sizes and also bonded permanently together.

Application
Filling and venting hoses for installation at the dispenser.

TECHNICAL DATA

Characteristics	Basic version
Max. allowable operating pressure PS	Depending on the design
Temperature range	-40 °C up to +85 °C (-40 °F up to +185 °F)
Sealing material	Natural gas resistant
Conformity / Tests / Approvals	Comply to NFPA 52

» CNG hoses

ORDERING | Hose sets in connection with TSA1 CNG / TSA5 CNG breakaway coupling

Filling and venting hoses for connecting fueling nozzle and TSA1 CNG / TSA5 CNG breakaway coupling, complete with fittings and press-fittings supported by coil spring stubs. The designs for TK17 CNG, TK16 CNG and TK26 CNG fueling nozzles are also available with permanently bonded filling and venting hose. Please contact us!

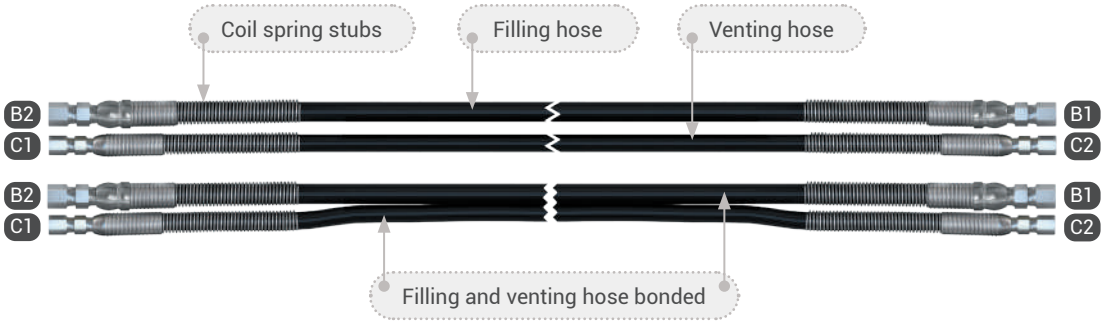

Hose sets for TK17 CNG / TK16 CNG

Part No.	B1/B2 (female thread)	C1/C2 (female thread)	Hose length	Pressure PS
C1-50487	UNF 9/16"-18*	UNF 7/16"-20*	3 m	345 bar / 5,000 psi
C1-42304	UNF 9/16"-18*	UNF 7/16"-20*	4 m	345 bar / 5,000 psi
C1-58587	UNF 9/16"-18*	UNF 7/16"-20*	5 m	345 bar / 5,000 psi

* acc. to SAE J514, 37° cone

Hose sets for TK10 CNG / TK24 CNG

Part No.	B1/B2 (female thread)	C1/C2 (female thread)	Hose length	Pressure PS
C1-106385	UNF 7/16"-20*	UNF 7/16"-20*	3 m	345 bar / 5,000 psi
C1-106386	UNF 7/16"-20*	UNF 7/16"-20*	4 m	345 bar / 5,000 psi
C1-106387	UNF 7/16"-20*	UNF 7/16"-20*	5 m	345 bar / 5,000 psi

* acc. to SAE J514, 37° cone

Hose sets for TK26 CNG

Part No.	B1/B2 (female thread)	C1/C2 (female thread)	Hose length	Pressure PS
C1-101749	UNF 7/8"-14*	UNF 9/16"-18*	3 m	345 bar / 5,000 psi
C1-102079	UNF 7/8"-14*	UNF 9/16"-18*	4 m	345 bar / 5,000 psi
C1-102508	UNF 7/8"-14*	UNF 9/16"-18*	5 m	345 bar / 5,000 psi

* acc. to SAE J514, 37° cone

» CNG hoses

ORDERING | Hose sets in connection with TSA2 CNG / TSA6 CNG inline breakaway coupling

Filling and venting hoses for connecting fueling nozzle / dispenser and TSA2 CNG / TSA6 CNG inline breakaway coupling, complete with fittings and press-fittings supported by coil spring stubs.

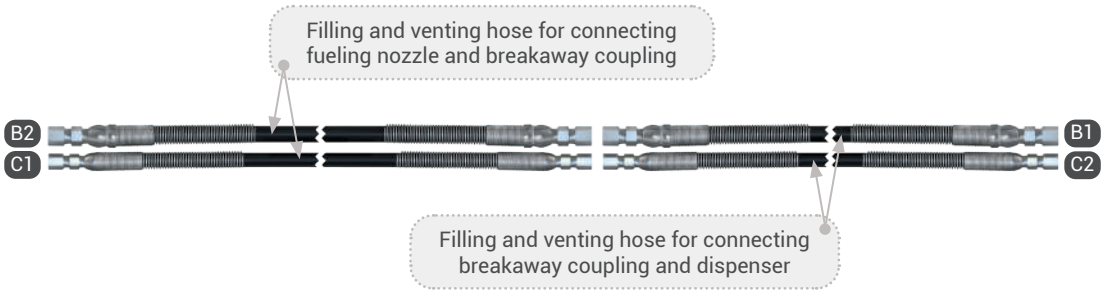

Hose sets for TK17 CNG / TK16 CNG

Part No.	B1/B2 (female thread)	C1/C2 (female thread)	Hose length	Pressure PS
on request	UNF 9/16"-18*	UNF 7/16"-20*	2.5 | 0.5 m	345 bar / 5,000 psi
on request	UNF 9/16"-18*	UNF 7/16"-20*	3.5 | 0.5 m	345 bar / 5,000 psi
on request	UNF 9/16"-18*	UNF 7/16"-20*	4.5 | 0.5 m	345 bar / 5,000 psi

* acc. to SAE J514, 37° cone

Hose sets for TK10 CNG / TK24 CNG

Part No.	B1/B2 (female thread)	C1/C2 (female thread)	Hose length	Pressure PS
C1-106395	UNF 7/16"-20*	UNF 7/16"-20*	2.5 | 0.5 m	345 bar / 5,000 psi
C1-106396	UNF 7/16"-20*	UNF 7/16"-20*	3.5 | 0.5 m	345 bar / 5,000 psi
C1-106397	UNF 7/16"-20*	UNF 7/16"-20*	4.5 | 0.5 m	345 bar / 5,000 psi

* acc. to SAE J514, 37° cone

Hose sets for TK26 CNG

Part No.	B1/B2 (female thread)	C1/C2 (female thread)	Hose length	Pressure PS
on request	UNF 7/8"-14*	UNF 9/16"-18*	2.5 | 0.5 m	345 bar / 5,000 psi
on request	UNF 7/8"-14*	UNF 9/16"-18*	3.5 | 0.5 m	345 bar / 5,000 psi
on request	UNF 7/8"-14*	UNF 9/16"-18*	4.5 | 0.5 m	345 bar / 5,000 psi

* acc. to SAE J514, 37° cone

» CNG hoses

ORDERING | Filling hoses

Filling hoses for connecting fueling / defueling nozzle and dispenser, complete with fittings and press-fittings supported by coil spring stubs.

Filling hoses for TK4 CNG / TK1 CNG / TK6 CNG

Part No.	B1/B2 (female thread)	Hose length	Pressure PS
E68-1031-0500	UNF 9/16"-18*	0.5 m	345 bar / 5,000 psi
E68-1031-3000	UNF 9/16"-18*	3 m	345 bar / 5,000 psi
E68-1031-4000	UNF 9/16"-18*	4 m	345 bar / 5,000 psi
E68-1031-5000	UNF 9/16"-18*	5 m	345 bar / 5,000 psi

* acc. to SAE J514, 37° cone

Filling hoses for TK10 CNG / TK24 CNG

Part No.	B1/B2 (female thread)	Hose length	Pressure PS
E68-1032-0500	UNF 7/16"-20*	0.5 m	345 bar / 5,000 psi
E68-1032-3000	UNF 7/16"-20*	3 m	345 bar / 5,000 psi
E68-1032-4000	UNF 7/16"-20*	4 m	345 bar / 5,000 psi
E68-1032-5000	UNF 7/16"-20*	5 m	345 bar / 5,000 psi

* acc. to SAE J514, 37° cone

Filling hoses for TK22 CNG / TK23 CNG / TK21 CNG

Part No.	B1/B2 (female thread)	Hose length	Pressure PS
E68-1033-0500	UNF 7/8"-14*	0.5 m	345 bar / 5,000 psi
E68-1033-3000	UNF 7/8"-14*	3 m	345 bar / 5,000 psi
E68-1033-4000	UNF 7/8"-14*	4 m	345 bar / 5,000 psi
E68-1033-5000	UNF 7/8"-14*	5 m	345 bar / 5,000 psi

* acc. to SAE J514, 37° cone

» Italian standard

DESCRIPTION

Features
- Push-Pull actuation
- High-grade materials
- Compact design

Fueling nozzles must be adapted to country-specific standards as the NGV1 standard and the ISO 14469 are not yet used worldwide. We, therefore, adapted our WEH® TK4 CNG Fueling nozzle for refueling vehicles with NGV1 standard / ISO 14469 at Italian fueling stations. And for refueling vehicles with Italian standard at NGV1 / ISO 14469 fueling stations we have designed the WEH® TK4i CNG and WEH® TW04 CNG Adapter nozzles.

Application
Adaptor nozzle for CNG fast filling of cars with NGV1 / ISO 14469 receptacle profile with fueling nozzles acc. to Italian standard or cars with Italian receptacle profile with fueling nozzles acc. to NGV1 standard / ISO 14469.
Operation only by specially trained service personnel. Not for self-service operation!

Description	Car	Fueling station
TK4 CNG	P30 acc. to ANSI NGV1 / B200 acc. to ISO 14469	G1/2" male thread (Italian standard)
TK4i CNG	G1/2" male thread (Italian standard) G1/2" (new Italian standard)	P30 acc. to ANSI NGV1 / B200 acc. to ISO 14469
TW04 CNG	G1/2" male thread (Italian standard)	P30 acc. to ANSI NGV1 / B200 acc. to ISO 14469

TECHNICAL DATA

Characteristics	Basic version
Nominal pressure	P30 acc. to ANSI NGV1 / B200 acc. to ISO 14469 PN = 200 bar (3,000 psi)
Max. allowable operating pressure	PS = 300 bar (4,300 psi)
Temperature range	-40 °C up to +85 °C (-40 °F up to +185 °F)
Material	Corrosion resistant
Sealing material	Natural gas resistant

Other designs available on request

» Italian standard

ORDERING | WEH® TK4 CNG Adaptor nozzle

Adaptor nozzle for refueling a car having a NGV1 / ISO 14469 receptacle profile with a fueling nozzle acc. to Italian standard (G1/2" male thread). **Not for self-service operation!**

approx. dimensions (mm)

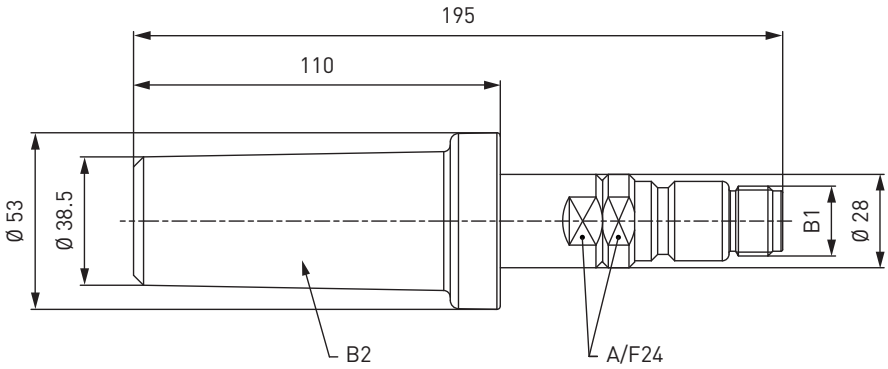

Part No.	Description	Pressure PS	B1 (male thread)	B2
C1-125999-X01	TK4 CNG	300 bar / 4,300 psi	G1/2" (Italian standard)	P30 acc. to ANSI NGV1 / B200 acc. to ISO 14469

ORDERING | WEH® TK4i CNG Adaptor nozzle

Adaptor nozzle for refueling a car having a receptacle profile acc. to **Italian standard (G1/2" male thread)** and **new Italian standard (without male thread)** with a fueling nozzle acc. to NGV1 standard / ISO 14469.
Not for self-service operation!

approx. dimensions (mm)

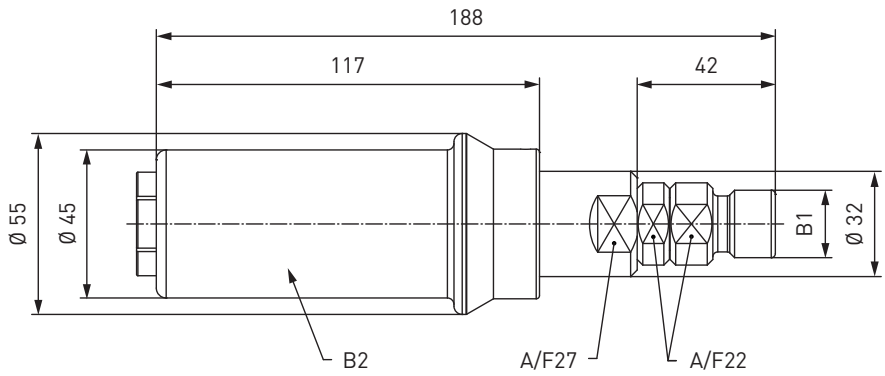

Part No.	Description	Pressure PS	B1	B2
C1-18148-X5-X01	TK4i CNG	300 bar / 4,300 psi	P30 acc. to ANSI NGV1 / B200 acc. to ISO 14469	G1/2" (Italian standard)

» NZ/GOST standard

DESCRIPTION

Features
- Push-Pull actuation
- Plastic thermal protection
- WEH® Jaw locking mechanism
- High-grade materials
- Compact design

Fueling nozzles must be adapted to country-specific standards as the NGV1 standard and the ISO 14469 are not yet used worldwide. We, therefore, adapted our WEH® TK4 CNG Fueling nozzle for refueling vehicles with NGV1 standard / ISO 14469 at fueling stations in China, South America, Southeast Asia, Russia, etc. We offer special versions for installation at fueling stations having NZ or GOST standard.

Application
Adaptor nozzle for CNG fast filling of cars having a NGV1 / ISO 14469 receptacle profile at car fueling stations with NZ or GOST standard. Operation only by specially trained service personnel. Not for self-service operation!

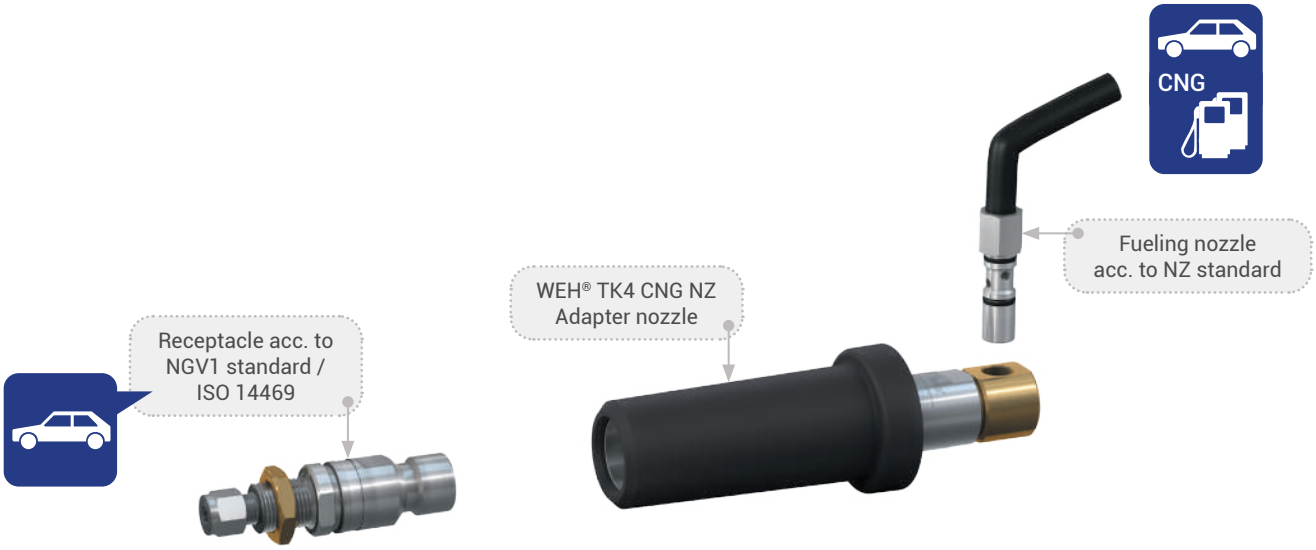

TECHNICAL DATA

Characteristics	Basic version
Nominal pressure	P30 acc. to ANSI NGV1 / B200 acc. to ISO 14469 PN = 200 bar (3,000 psi)
Max. allowable operating pressure	PS = 300 bar (4,300 psi)
Temperature range	-40 °C up to +85 °C (-40 °F up to +185 °F)
Material	Corrosion resistant
Sealing material	Natural gas resistant

Other designs available on request

» NZ/GOST standard

ORDERING | WEH® TK4 CNG NZ Adaptor nozzle

Adaptor nozzle for refueling a car having a NGV1 / ISO 14469 receptacle profile at fueling stations with a fueling nozzle acc. to NZ standard. **Not for self-service operation!**

approx. dimensions (mm)

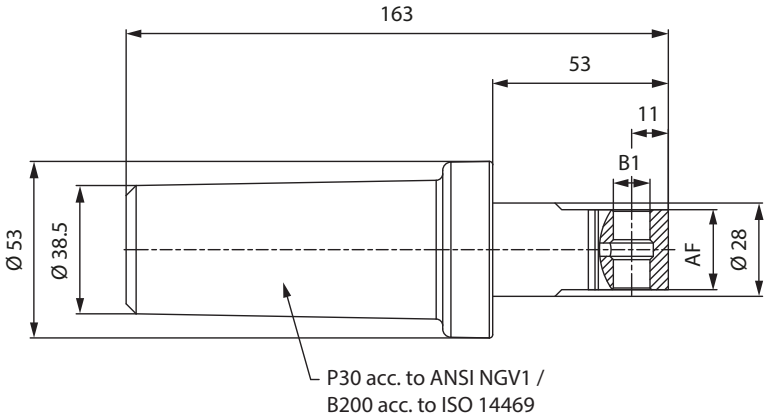

Part No.	Description	Pressure PS	B1	AF
C1-126024-X01	TK4 CNG NZ	300 bar / 4,300 psi	NZ Ø 11.0 (e.g. Brasil, Pakistan, Bangladesh, India)	24
C1-126025-X01	TK4 CNG NZ	300 bar / 4,300 psi	NZ Ø 12.0 (e.g. China)	25
C1-126026-X01	TK4 CNG NZ	300 bar / 4,300 psi	NZ Ø 1/2" / Ø 12.7 (e.g. Argentina)	24

ORDERING | WEH® TK4 CNG GOST Adaptor nozzle

Adaptor nozzle for refueling a car having a NGV1 / ISO 14469 receptacle profile at fueling stations with a fueling nozzle acc. to GOST standard. **Not for self-service operation!**

approx. dimensions (mm)

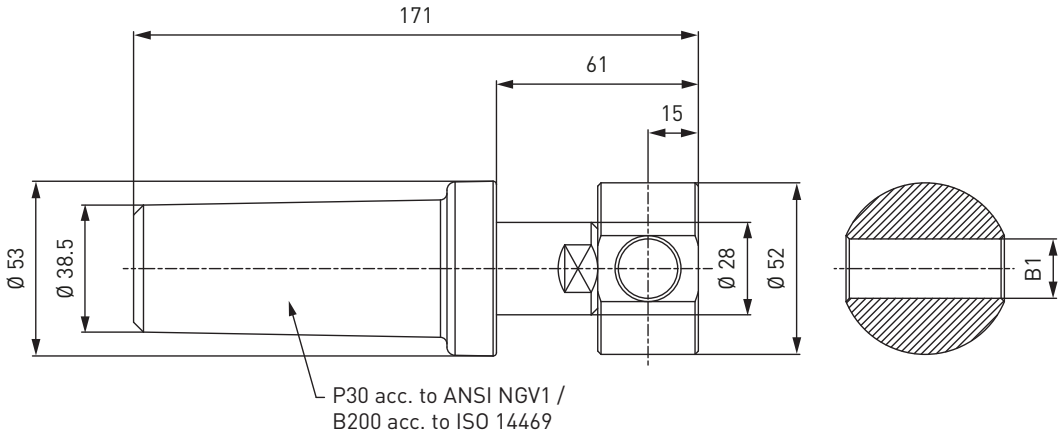

Part No.	Description	Pressure PS	B1
C1-126027-X01	TK4 CNG GOST	300 bar / 4,300 psi	GOST Ø 18.0 (Russia)

» NZ/GOST standard

DESCRIPTION

Features
- Compatible with NZ or GOST standard
- Sealing-friendly design

Fueling products must be adapted to country-specific standards as the NGV1 standard and the ISO 14469 are not yet used worldwide. We, therefore, adapted our WEH® TN1 CNG Receptacle for refueling vehicles with NZ or GOST standard at NGV1 / ISO 14469 fueling stations in China, South America, Southeast Asia, Russia, etc.
We offer TN1 CNG adaptor receptacles for connection to the NZ or GOST receptacle of the vehicle. The adaptor receptacle can also be permanently installed.

Application
Adaptor receptacle for CNG refueling of cars having a NZ or GOST receptacle profile at car fueling stations with NGV1 standard / ISO 14469. Operation only by specially trained service personnel. Not for self-service operation!

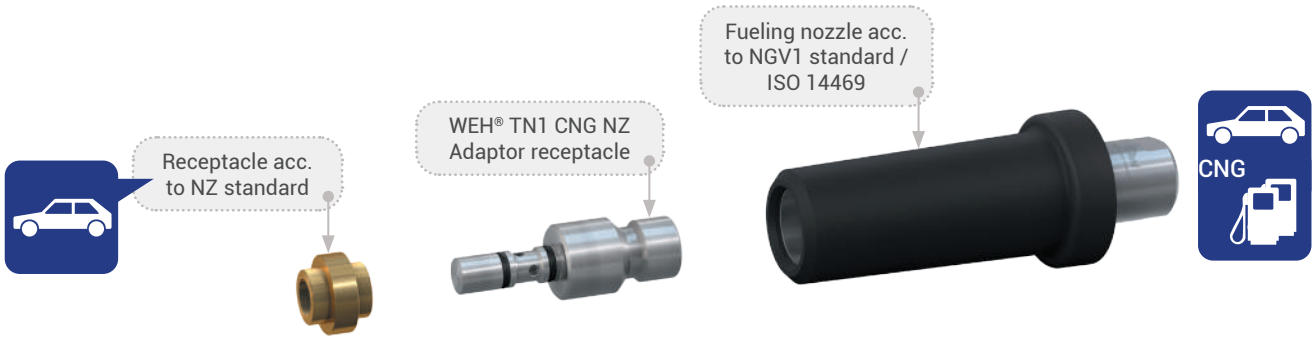

TECHNICAL DATA

Characteristics	Basic version
Nominal pressure	PN = 200 bar (3,000 psi)
Max. allowable operating pressure	PS = 300 bar (4,300 psi)
Temperature range	-40 °C up to +120 °C (-40 °F up to +248 °F)
Material	Corrosion resistant
Sealing material	Natural gas resistant

Other designs available on request

» NZ/GOST standard

ORDERING | WEH® TN1 CNG NZ Adaptor receptacle

Adaptor receptacle for refueling a car having a NZ receptacle profile at fueling stations with a fueling nozzle acc. to NGV1 standard / ISO 14469. **Not for self-service operation!**

approx. dimensions (mm)

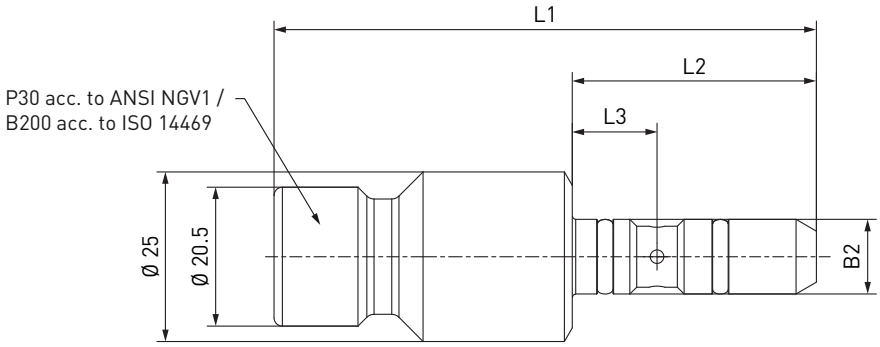

Part No.	Description	Pressure PS	B2	L1	L2	L3
C1-67266	TN1 CNG NZ	300 bar / 4,300 psi	NZ Ø 11.0 (e.g. Brasil, Pakistan, Bangladesh, India)	80	36	12.5

Other diameters available on request

ORDERING | WEH® TN1 CNG GOST Adaptor receptacle

Adaptor receptacle for refueling a car having a GOST receptacle profile at fueling stations with a fueling nozzle acc. to NGV1 standard / ISO 14469. **Not for self-service operation!**

approx. dimensions (mm)

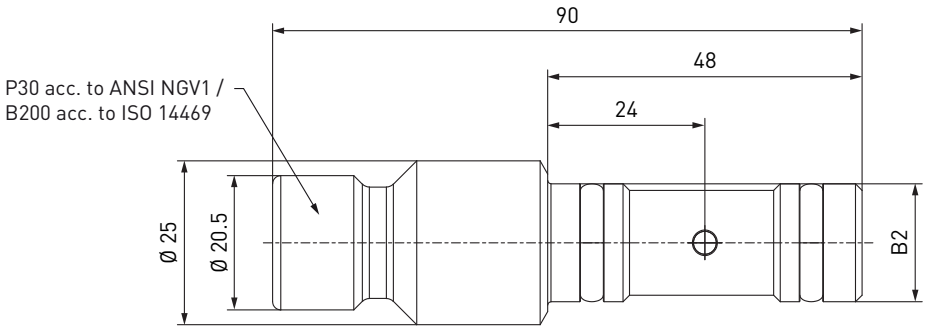

Part No.	Description	Pressure PS	B2
C1-77971	TN1 CNG GOST	300 bar / 4,300 psi	GOST Ø 18.0 mm (Russia)

» Buses and trucks

DESCRIPTION

Features
- Push-Pull actuation
- Plastic thermal protection
- WEH® Jaw locking mechanism
- Integrated shut-off valve
- Colour coding
  (200 bar / 3,000 psi black, 250 bar / 3,600 psi yellow)
- High-grade materials

WEH has developed special adaptor nozzles for refueling of CNG buses and trucks at car fueling stations and CNG cars at bus / truck fueling stations.

Application
Adaptor nozzle for fast filling of CNG buses and trucks at car fueling stations or for fast filling of CNG cars at bus / truck fueling stations acc. to NGV1 Standard / ISO 14469.
Operation only by specially trained service personnel. Not for self-service operation!

TK22N CNG:

Receptacle acc. to NGV1 / ISO 14469 (e.g. TN5 CNG)

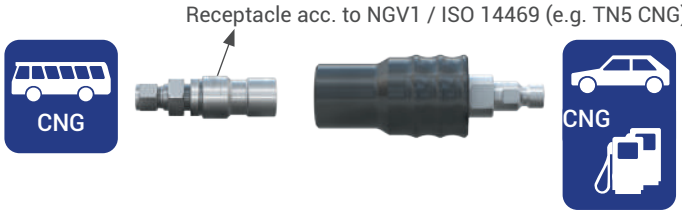

TK4-TN5 CNG:

Receptacle acc. to NGV1 / ISO 14469 (e.g. TN1 CNG)

TECHNICAL DATA

Characteristics	Basic version	
Nominal pressure	P30 acc. to ANSI NGV1 / B200 acc. to ISO 14469 or P30HD acc. to ANSI NGV1 / C200 acc. to ISO 14469 PN = 200 bar (3,000 psi)	P36 acc. to ANSI NGV1 / B250 acc. to ISO 14469 or P36HD acc. to ANSI NGV1 / C250 acc. to ISO 14469 PN = 250 bar (3,600 psi)
Max. allowable operating pressure	PS = 300 bar (4,300 psi)	PS = 350 bar (5,000 psi)
Temperature range	-40 °C up to +85 °C (-40 °F up to +185 °F)	
Material	Corrosion resistant	
Sealing material	Natural gas resistant	

Other designs available on request

» Buses and trucks

ORDERING | WEH® TK22N CNG Adaptor nozzle

CNG adaptor nozzle for refueling buses and trucks at car fueling stations. **Not for self-service operation!**

approx. dimensions (mm)

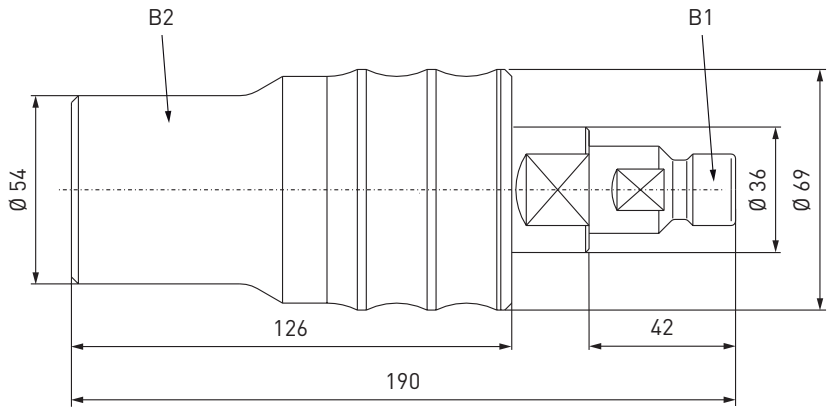

Part No.	Description	Pressure PS	B1	B2
C1-31219-X2-X01	TK22N CNG	300 bar / 4,300 psi	P30 acc. to ANSI NGV1 / B200 acc. to ISO 14469	P30HD acc. to ANSI NGV1 / C200 acc. to ISO 14469
C1-102480-X01	TK22N CNG	350 bar / 5,000 psi	P36 acc. to ANSI NGV1 / B250 acc. to ISO 14469	P36HD acc. to ANSI NGV1 / C250 acc. to ISO 14469

ORDERING | WEH® TK4-TN5 CNG Adaptor nozzle

CNG adaptor nozzle for refueling cars at bus or truck fueling stations. **Not for self-service operation!**

approx. dimensions (mm)

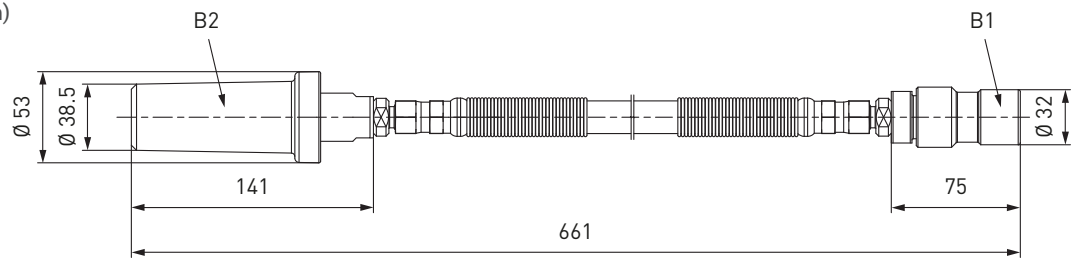

Part No.	Description	Pressure PS	B1	B2
C1-126038-X01	TK4-TN5 CNG	300 bar / 4,300 psi	P30HD acc. to ANSI NGV1 / C200 acc. to ISO 14469	P30 acc. to ANSI NGV1 / B200 acc. to ISO 14469
C1-126028-X01	TK4-TN5 CNG	350 bar / 5,000 psi	P36HD acc. to ANSI NGV1 / C250 acc. to ISO 14469	P36 acc. to ANSI NGV1 / B250 acc. to ISO 14469

» Technical appendix

Definitions

Abbreviation	Definition	
Pressure specifications	*(all pressure specifications are to be understood as overpressure, unless otherwise stated)*	
PN	Nominal pressure	Nominal pressure after temperature compensation at 15 °C (59 °F)
PS	Max. allowable operating pressure	Maximum allowable operating pressure acc. to Pressure Equipment Directive 2014/68/EU, Article 2 paragraph 8
PT	Hydrostatic test pressure	Hydrostatic test pressure acc. to Pressure Equipment Directive 2014/68/EU, Annex I no. 7.4
PP	Pilot pessure	Actuation pressure for hydraulic and pneumatic components
PC	Cracking pressure	Pressure at which the check valve opens and the first indication of flow occurs
WP	Working pressure	'Working pressure' means the maximum pressure to which a component is designed to be subjected to and which is the basis for determining the strength of the component under consideration
MAWP	Max. allowable working pressure	Max. allowable operating pressure at which the weakest point of the system or the vessel (e.g. cylinder valve) can operate at a certain temperature during normal operation
Dimensions		
L1, L2, L3 ...	Length specification	
D1, D2, D3 ...	Diameter specification	
A/F(1), A/F(2) ...	Wrench size specification	
Ports		
A / X	Customer-specific port (test piece, sample, cylinder valve, handwheel respiratory protective equipment)	
B1, B2, B3 ...	Media ports	
C1, C2, C3 ...	Gas recirculation ports	
P1, P2, P3 ...	Pilot pressure ports	
MA1, MA2 ...	Measuring ports	
Q	Drain port filter	
G	Mounting bores	
Others		
DN	PED-nominal size (DN)	Nominal size (DN) acc. to Pressure Equipment Directive 2014/68/EU, whereby the largest, pressurized diameter of the media or pilot pressure connections of the WEH Device (A, B1, B2, B3 or C1, C2, C3 and P1, P2, P3) which faces the customer´s pipe system, is relevant. Expressed by a rounded, dimensionless number, e. g. DN 25
TNW	Technical nominal size	The technical nominal size (formerly expressed by "effective diameter") is the smallest diameter available for the media flow of the respective pressure device. Expressed by a number with unit, e. g. 12 mm
µm	Max. diameter of the filtered particle	
Kv	Is the discharge of water in m^3/h at a pressure drop of 1 bar (14.5 psi), acc. to DIN/EN 60534-2	
Cv	Is the discharge of water in gallons per minute at a pressure drop of 1 psi, acc. to DIN/EN 60534-2	
IR	Infrared data interface	

» Technical appendix

Definitions

Abbreviation	Definition
ENR	Exchangeable data interface (exchangeable nozzle receiver)
TS	Maximum allowable temperature acc. to Pressure Equipment Directive 2014/68/EU, Article 2 paragraph 9
Breakaway force	Is the force range, in which the breakaway releases
NC	Normally closed (initial position of shut-off valve)
NO	Normally open (initial position of shut-off valve)

Technical explanations

Term	Definition
Temperature range	Is the temperature range in which the WEH® Product can be used. If no explicit information on medium and ambient temperature is given, this temperature range applies to both medium and environment.
Media temperature range	Is the temperature range of the medium used, which can flow through the WEH® Product (may change depending on the time of measurement).
Ambient temperature range	Is the temperature range of the environment in which the WEH® Product can be used.
Leak rate	Is the maximum external leak rate, which the WEH® Product exhibits in delivery condition.
Internal leak rate	The internal leak rate depends, among other things, on type of application, medium and pressure difference on the WEH® Product. On request it can be specified more precisely.
Max. side load	Is the max. allowable sum of all external forces that may act on the device under intended use. **Note:** External forces can affect the life time of WEH® Products and can cause damage. Tensile and transverse loads as well as vibrations and pressure impacts need to be considered, e.g. by user side measures such as on site mountings and similar. Therefore, lateral forces such as whipping hoses or other equipment must be avoided. WEH® Products should be installed in such a way, that lateral forces which could lead to leakage or damage can not occur. Special applications require a special consultation before selecting the product.
Products with pneumatic actuation	The customer has to ensure there is adequate axial movement when pneumatically actuated WEH® Products are used in automated systems, see maximum side load. Ideally the products should be mounted with a floating joint or introduced individually to prevent the possibly existing clamping jaws getting blocked or jammed in the thread of the test piece.
Sealing material	On request the WEH® Product can be adapted to customer specific applications regarding to the sealing materials used. The clarification of the media compatibility and suitability of the adapted WEH® Product for the final application is always the responsibility of the end user.
Corrosion resistant	WEH® Products are designed for use in temperate climate zones - with low levels of humidity and salinity in the air. An accelerated formation of rust or corrosion may occur at or near the sea. Therefore, reduce the inspection interval recommended for normal use and send in the WEH® Product for maintenance immediately if you notice increased soot, rust or corrosion.
Storage / life time of components	There are certain requirements for every WEH® Product. WEH® Products are generally products which may be subject to wear and fatigue during operation and depending on your individual application/use. For details - in particular regarding the corresponding minimum inspection and maintenance intervals – please refer to the respective operating instructions for the WEH® Product.

» Technical appendix

Further explanations

Subject	Definition
Technical data	Unless otherwise stated, the technical data in catalogs, data sheets and operating instructions are based on tests with nitrogen that are in the development phase or at the end of development. Leakage data are based on measurements with helium.
Intended use	The intended use of WEH® products can be found in the respective operating instructions. The following applications are generally excluded for all WEH® products, unless these are expressly permitted in the operating instructions: • applications in the aerospace industry, e.g. for installation or use in or for the construction of aircraft, rocket propulsion systems, space probes, satellites, etc. • shipping applications
Safe product selection	Our WEH® Products are designed to be operated by qualified professional users (insofar as WEH® Products are also designed to be operated by other users in individual cases, this is explicitly stated in the corresponding operating instructions). Please note that WEH does not know your system and therefore - also due to the large number of different potential applications of WEH® Products - cannot perform tests on all potential types of application. You alone are responsible for the selection, configuration and suitability of WEH® Products, especially according to the requirements of your system. Before purchasing WEH® Products, please particularly ensure that our products are compatible with your intended use, your performance data, your material and fluids, your system concept and your system limits according to our product specifications. Please also consider your technical and legal requirements for operation, handling and maintenance. The quality and safety of WEH® Products is our highest priority. For this reason, WEH® Products may not be used outside the specifications in the relevant data sheets and product descriptions. If you are not sure whether the WEH® Product is suitable for your system and intended use, please contact us in advance. We also strongly recommend that you refrain from using third-party spare parts or a combination of WEH® Products with unsuitable third-party products. You alone are responsible for reviewing the suitability of third-party products. WEH® Products and WEH® Spare parts comply with our quality and safety standards.
Explanation on the Pressure Equipment Directive	In general, WEH® Products with a maximum allowable operating pressure of more than 0.5 bar (PS) fall within the scope of application of the Pressure Equipment Directive 2014/68/EU, are generally classified as pressure accessories in accordance with Article 2 (5) of the same and are considered to be similar to piping. These WEH® Products may not be used as safety accessories. Furthermore, it is pointed out, that these WEH® Products are designed and placed on the market in accordance with the requirements of Article 4 (3) of the Pressure Equipment Directive 2014/68/EU. For some products a different classification and/or categorisation is required or can be conducted on request. In these cases, if legally required, a conformity assessment procedure in accordance with Annex III of the Pressure Equipment Directive 2014/68/EU can and will also be conducted and the conformity can be declared by means of an EU Declaration of Conformity in accordance with Annex IV of the Pressure Equipment Directive 2014/68/EU. In these cases, the EU Declaration of Conformity is enclosed with the product.
External change management	WEH reserves the right to update, optimise and adjust its products continuously. This may result in corresponding changes of the product. Customers will be informed proactively or unsolicited by WEH only in individual cases about product updates, product optimisations and/or product adaptations that have been carried out. You are free to contact WEH at any time to request information about any product updates, product optimisations and/or product adjustments.

» Brochure data

This catalog was created diligently and on the basis of decades of experience.

All information/recommendations in this catalog are non-binding and are particularly subject to possible deviations or changes. For any binding information/recommendations, please refer to the verified information/recommendations in our individual orders. Particularly, due to the wide range of possible applications of WEH® Products and the unknown parameters and operating conditions linked to them, the accuracy and/or completeness of the information/recommendations in this catalog cannot be guaranteed with respect to certain individual cases. In doing so, we would like to refer once again to the information/recommendations provided in individual orders.

The application limits indicated in this catalog (e.g. for pressure, temperature, etc.) are generally theoretical values determined in a test environment. As the concrete operating conditions could differ, we cannot ensure that these values apply to a specific customer application. During the practical use, you should particularly consider that the mutual influence of operational parameters could result in changes of the maximum values. Especially, in case of any unusual operating conditions, please contact WEH before using any WEH® Products. We therefore strongly recommend that you also require any necessary binding information/recommendations to be included by us in the individual orders.

Furthermore, we point out that we cannot assume any warranty or accept any responsibility for printing errors, incomplete information or misinterpretations. Illustrations and/or images are particularly provided for illustrative purposes only and may differ in some details from the actual product. Moreover, dimensions and other technical details in this catalog are non-binding information and are provided for illustrative purposes only. The product's exact form and design result exclusively from the specific individual order. In particular, certain information/recommendations in the catalog only become integral part of the contract if they have been expressly contractually agreed.

Only the latest version of our catalog and other product related documents is valid and applicable. Please ensure that you always use the latest catalog's and documents' versions. Please feel free to contact WEH at any time and request the latest versions.

Our General Terms and Conditions and the Agreement on Protection of Know-How and Quality Assurance shall apply to deliveries and other services, unless expressly agreed otherwise.
In principle, we do not accept the General Terms and Conditions of our customers or third parties. Thank you for your understanding.

WEH GmbH Verbindungstechnik
Josef-Henle-Str. 1
89257 Illertissen / Germany

Phone: **+49 7303 9609 704**
E-Mail: **h2-cng@weh.com**
Website: **www.weh.com**

More questions? – Great! Don't hesitate to contact our experts.

Part No. 192163

MD-10000-L01-R3.1.0-03