HINGES

INDEX - HINGES

CONTINUOUS HINGES

NEW		FinAlu® continuous hinge	33
		Aluminium profile continuous hinge - 50 mm	34
		Rolled knuckle continuous hinge - 15 mm width	35
		Rolled knuckle continuous hinge - 20 mm width	35
		Rolled knuckle continuous hinge - 25 mm width	36
		Rolled knuckle continuous hinge - 30 mm width	37
		Rolled knuckle continuous hinge - 32 mm width	38
		Rolled knuckle continuous hinge - 35 mm width	38
		Rolled knuckle continuous hinge - 40 mm width	39
		Rolled knuckle continuous hinge - 50 mm width	40
		Rolled knuckle continuous hinge - 57 mm width	41
		Rolled knuckle continuous hinge - 60 mm width	41
		Rolled knuckle continuous hinge - 63 mm width	42
		Rolled knuckle continuous hinge - 70 mm width	42
		Rolled knuckle continuous hinge - 76 mm width	42
		Rolled knuckle continuous hinge - 80 mm width	43
		Rolled knuckle continuous hinge - 100 mm width	43
		Rolled knuckle continuous hinge - 120 mm width	44
		Rolled knuckle continuous hinge - 127 mm width	44
NEW		Interleaf continuous hinge	45
		Polymer continuous hinges in 15.25 meter rolls	46
		Drilled continuous hinge with one cranked leaf	47
		Undrilled continuous hinge with one cranked leaf	47
		Continuous hinge with two cranked leaves	48
		Rolled knuckle continuous hinge “Imperial” dimension	48
		Double knuckle continuous hinge	49
		Seal gasket for double knuckle continuous hinge	49
		Humidity drain gasket	50

CONCEALED HINGES

		Concealed hinges A - 120° opening	51
		Concealed hinges B - 120° opening	51
		Concealed hinge with removable pin - 110° opening	52
		Concealed hinges with retractable pin	52
		Concealed pin hinges - 100° opening	53
		Concealed pin hinges - 120° opening	53
		Concealed hinges with spring - 95° opening	54
		Concealed hinges without spring - 95° opening	54
		Concealed hinge with friction - 90° opening	55
NEW		Concealed hinge with friction - 130° opening	55
		Concealed hinge - 180° opening	56
		Multi link concealed hinges - 180° opening	56
NEW		3-way adjustable concealed hinge	57
		Concealed hinge with friction - 180° opening	58
		Concealed hinge with removable pin - 180° opening	59
NEW		Long concealed spring hinges - 180 ° opening	60
		Concealed heavy duty hinge for flush doors - 90° opening	61
		Concealed heavy duty hinge for flush doors - 90° opening	61
		Concealed heavy duty hinge for flush doors - 90° opening	62
		Concealed weld-on springloaded pin hinge	62
		Concealed springloaded pin hinges A	63
		Concealed springloaded pin hinges B	63
NEW		Concealed hinge A - 90° opening	64
NEW		Concealed hinge B - 90° opening	64
NEW		Concealed hinge C - 90° opening	65
NEW		Heavy duty concealed hinge - opening 90°	66
		Concealed hinges - 90° opening	67
		Concealed hinges - 125° opening	68
NEW		Concealed hinges (size M) - 125° opening	69
		Concealed hinge - 110° opening	70

INDEX - HINGES

INDEX - HINGES

		Spring loaded concealed hinge - 110° opening	70
NEW		Concealed hinge - 7 axis - steel plates - 110° opening	71
NEW		Spring loaded concealed hinge - 7 axis - steel plates - 110° opening	71
		Spring loaded concealed hinges - 90° opening	72
		Spring loaded concealed hinges - 150° opening	72
		Concealed hinges with two cranked leaves - undrilled - 120° opening - version A	73
		Concealed hinges with two cranked leaves - drilled - 120° opening - version A	73
		Concealed hinges with two cranked leaves - undrilled - 120° opening - version B	74
		Concealed hinges with two cranked leaves - drilled - 120° opening - version B	74

HINGES WITH DUAL FUNCTION

NEW		Polymer hinges with or without adjustable spring torque	77
NEW		Spring hinges - aluminium profile 0.20 N.m - diameter 8	78
NEW		Spring hinges - aluminium profile 0.50 N.m - diameter 8	79
NEW		Spring hinges - aluminium profile 0.70 N.m - diameter 8	79
NEW		Spring hinges - aluminium profile 0.90 N.m - diameter 8	80
NEW		Spring hinges - aluminium profile 0.35 N.m - diameter 13	81
NEW		Spring hinges - aluminium profile 0.70 N.m - diameter 13	82
NEW		Spring hinges - aluminium profile 1.3 N.m - diameter 13	83
NEW		Spring hinges - aluminium profile 3.80 N.m - diameter 18	84
NEW		Stainless steel hinges with concealed spring 0.35 N.m	85
NEW		Stainless steel hinges with concealed spring 0.7 N.m	85
NEW		Stainless steel hinges with concealed spring 1.3 N.m	86
NEW		Compact spring hinges 1.6 N.m	87
NEW		Compact spring hinges 2.2 N.m	87
		Opening spring hinge 2.2 N.m	88
NEW		Opening spring hinges 120 mm long	89
NEW		Closing spring hinges 120 mm long	89
NEW		Opening spring hinges 180 mm long	90
NEW		Closing spring hinges 180 mm long	90
NEW		Opening spring hinges 240 mm long	91

INDEX - HINGES

NEW	Closing spring hinges 240 mm long	91
	Spring hinges 50 mm long	92
	Spring hinges 60 mm long - with 2 holes	92
	Spring hinge 60 mm long - with 4 holes	93
	Spring hinges 75 mm long - drilled	93
	Spring hinges 75 mm long - undrilled	94
	Spring hinges 80 mm long	94
	Spring hinges 160 mm long	95
	Spring hinges 170 mm long	95
	Cranked spring hinge 66 mm long	96
	Cranked spring hinge 60 mm long	96
	Spring loaded lift-off hinges for doors	97
	Lift-off rising hinge in stainless steel	98
NEW	Spring-assist torque hinge	99
NEW	Cover for spring-assist torque hinge	100
NEW	Balance-adjustable lift-assist hinge	101
NEW	Spring hinges with soft-close dampening	102
NEW	Soft close hinges for vertical application	103
NEW	Soft-close dampening hinges in aluminium	104
	Soft-close dampening hinge in stainless steel	105
	Soft-close dampening hinges in plastic	106
NEW	Soft-close dampening lift-off hinge	107
	Small friction hinges - adjustable	108
NEW	Large friction hinges - adjustable	108
NEW	Hinges with or without friction in stainless steel - friction torque 3 N.m	109
NEW	Hinges with or without friction in stainless steel - friction torque 4.5 N.m	109
NEW	Hinges with or without friction in stainless steel - friction torque 5 N.m	110
NEW	Hinges with or without friction in stainless steel - friction torque 8 N.m	110
NEW	Stainless steel torque hinge 2 N.m	111
NEW	Lift-off torque hinges	112

INDEX - HINGES

		One way torque hinge - constant torque 9 N.m / set	113
		Dual axis torque hinge - 30 x 60 mm	114
		Dual axis torque hinge - 50 x 76 mm	115
NEW		Torque hinge A	116
NEW		Torque hinge B	117
		Swivel torque hinge - torque 2 N.m	118
NEW		Swivel torque hinge with hole diameter 21.5 mm - 5 N.m	118
		Swivel torque hinge with hole diameter 34 mm - torque 7 N.m	119
		Mini torque hinges - torque 0.25 N.m	119
		Hi-Klik™ detent hinges - small	120
		Hi-Klik™ detent hinges - large	120
		Detent plastic hinges	121
		Hinge with stop at 115°	121
NEW		Multi angle locking hinge A with lever	122
NEW		Free axis hinge A	123
NEW		Multi angle locking hinge B with lever	124
NEW		Free axis hinge B	125
		Hinge with stop at 60°	126
NEW		Hinge with integrated stop at 60°	126
		Compression latching hinges	127
		Hinge for insulated door	128

HEAVY DUTY HINGES

		Forged hinges - 3 knuckles	129
		Forged hinges with reversed leaves - 3 knuckles	129
NEW		Forged hinges - 5 knuckles	130
		Forged lift-off hinges	131
		Half leaves for Modulo hinges - thickness 3 mm	133
		Half leaves for Modulo hinges - thickness 4 mm	133
		Half leaves for Modulo hinges - thickness 5 mm	134
		Half leaves for Modulo pin hinges - thickness 3 mm	134

		Half leaves for Modulo pin hinges - thickness 4 mm	135
		Half leaves for Modulo pin hinges - thickness 5 mm	135
		Pin in POM for Modulo system	136
		Expanded pin BG for Modulo system	136
		Headed pin BT for Modulo system	137
		Plug (VA) for Modulo system	137
NEW		Heavy duty hinge 115 x 70 mm - 5 knuckles	138
NEW		Heavy duty hinge 115 x 125 mm - 5 knuckles	138
NEW		Heavy duty hinge 115 x 155 mm - 5 knuckles	139
NEW		Heavy duty hinge 115 x 125 mm - 3 knuckles	139
NEW		Heavy duty hinge 115 x 155 mm - 3 knuckles	140
NEW		Heavy duty hinge 115 x 215 mm - 3 knuckles	140
		Heavy duty hinge - 66 x 230 mm	141
		Heavy duty hinge - 66 x 215 mm	141
		Heavy duty hinges - 65 x 230 mm	142
		Heavy duty hinge - 130 x 95 mm	142
NEW		Heavy duty hinge 63.5 x 38 mm	143
NEW		Heavy duty hinge 76 x 50 mm	143
NEW		Stainless steel dual washer hinge 101.6 x 73 mm	144
NEW		Polymer bushing and stainless steel washer hinge 101.6 x 76.2 mm	144
NEW		Bronze bushing hinge 101.6 x 76.2 mm	145
NEW		Polymer shrouded bushing hinge 101.6 x 76.2 mm	145
NEW		Polymer shrouded bushing hinge 101.6 x 88.9 mm	146
NEW		Polymer bushing lift-off hinge	146
NEW		Stainless steel and bronze shrouded bushing hinge 114.3 x 114.3 mm	147
		Round top weld-on steel hinges - brass washer	148
		Round top weld-on steel hinges - steel pin - ball bearing	148
		Round top weld-on steel hinges - steel pin - brass washer - with grease nipple	149
		Round top weld-on aluminium hinges - stainless steel pin - stainless steel washer	149
		Flat top weld-on steel hinges - brass washer	150

INDEX - HINGES

	Flat top weld-on stainless steel hinges - stainless steel pin - brass washer	150
	Flag hinges A - steel pin - brass washer	151
	Flag hinges B - steel pin - brass washer	151
	Heavy duty pin hinges	152

CARBON KEVLAR HINGES

	Carbon Kevlar hinges - 36 mm width	153
	Carbon Kevlar hinges - 50 mm width	153
	Carbon Kevlar hinges with glass fibre - 50 mm width	154

POLYMER HINGES

	Square design hinges with countersunk holes	155
	Square design hinges with studs	155
	Symmetrical design hinges	156
	Asymmetrical design hinges	156
	Polyamide hinges with countersunk holes	157
	Polyamide hinges with studs	157
	Polyamide hinges combined studs and holes	158
	Heavy duty plastic hinge - 180° opening	158
NEW	4-hole square polyamide hinge with carbon fibre	159
NEW	6-hole square polyamide hinges with carbon fibre	159
NEW	Symetrical polyamide hinges with carbon fibre	160
NEW	Asymmetrical polyamide hinges with carbon fibre	160
	Plastic hinge 63.5 mm long	161
	Plastic hinges 63.5 mm long with reversed leaves	161
	Lift-off hinges in plastic	162
	Plastic hinges 25.4 mm long	163
	Plastic hinges 38.1 mm and 50.8 mm long	163
	Plastic hinges 76.2 mm long	164
	Plastic hinges 88.9 mm and 101.6 mm long	164
	Polymer continuous hinges in 15.25 meter rolls	165

COMMON HINGES

NEW		Square design stainless steel hinge	166
		Hinge 30 x 30 mm	166
		Square hinges with two offset leaves and removable pin - no holes	167
NEW		Square hinges with two offset leaves and removable pin - with 4 holes	167
NEW		Square hinges with two offset leaves and removable pin - with 6 holes	168
		Square hinges with two offset leaves and riveted pin - with 4 holes	168
NEW		Square hinges with two offset leaves and riveted pin - with 6 holes	169
		Square hinges with no offset leaf and riveted pin - no holes	169
		Square hinges with no offset leaf and riveted pin - with 4 holes	170
NEW		Square hinges with no offset leaf and riveted pin - with 6 holes	170
		Hinge with nylon washers	171
		Hinge with oblong holes	171
NEW		Mini brass-plated steel hinges 15 x 9 mm	172
NEW		Mini brass-plated steel hinges 16 x 12 mm	172
NEW		Mini brass-plated steel hinges 20 x 14 mm	173
NEW		Mini brass-plated steel hinges 25 x 12 mm	173
NEW		Mini brass-plated steel hinges 25 x 16 mm	174
		Hinge 50 x 30 mm	175
		Hinges 50 x 40 mm	175
		Hinges 60 x 35 mm	176
		Hinge 62 x 44 mm	176
		Hinge 75 x 40 mm	177
		Small hinges 30 to 50 mm long	177
		Hinges 60 to 100 mm long	178
		Hinge 100 x 84 mm	178
NEW		Small FinAlu® hinges	179
NEW		Aluminium profile hinges 30 x 35 mm	180
NEW		Aluminium profile hinges 60 x 35 mm	180
NEW		Aluminium profile hinges 90 x 35 mm	181
NEW		Aluminium profile hinges 120 x 35 mm	181

INDEX - HINGES

	Aluminium profile hinges - diameter 13	182
	Heavy duty aluminium profile hinges	182
	Aluminium hinges - 50 mm width	183
	Aluminium hinges with reversed leaves - 50 mm width	183
	Clean room lift-off hinges 65 x 60 mm	184
	Aluminium lift-off hinges 80 x 80 mm	184
	Aluminium lift-off hinges 100 x 100 mm	185
	Brass hinge - 4 holes	185
	Brass hinges - 6 holes A	186
	Brass hinges - 6 holes B	186
	Lift-off hinges 30 mm long	187
	Lift-off hinges 40 mm long	187
	Lift-off hinges 50 x 30 mm	188
	Lift-off hinges 60 to 80 mm long	188
	Lift-off hinges 80 x 60 mm - stainless steel	189
	Lift-off hinges 80 x 80 mm - stainless steel with 6 holes	189
	Lift-off hinges 100 x 82 mm - stainless steel with 8 holes	190

VARIOUS HINGES

	Hinge for marine applications - 36.5 x 38 mm	191
	Hinge for marine applications - 36.5 x 56.5 mm	191
	Hinge for marine applications - 36.5 x 76 mm	192
	Hinges for marine applications - 36.5 x 65.5 mm	192
	Hinge for marine applications - 38.1 x 71.1 mm	193
	Hinge for marine applications - 52 x 70 mm	193
	Hinge for marine applications - 30 x 101 mm	194
	Hinge for marine applications - 38 x 178 mm	194

	Hinge for marine applications - 40.1 x 137.3 mm	195
	Brass hinge - 30 x 98.5 mm	195
	Brass hinge - 30 x 76 mm	196
	Small butt hinge with one cranked leaf 38 mm	197
	Small butt hinges with one cranked leaf and removable pin 38 mm	197
	Small butt hinge with one cranked leaf 50 mm	198
	Small butt hinge with one cranked leaf and removable pin 50 mm	198
	Small butt hinge with two cranked leaves and removable pin 38 x 18.5 mm	199
	Small butt hinge with two cranked leaves and removable pin 38 x 44.8 mm	199
	Small butt hinges with two cranked leaves and removable pin 55 x 38 mm	200
	Small butt hinge with two cranked leaves 55 x 53.7 mm	200
	Small butt hinges with one cranked leaf 38 mm	201
	Small butt hinge with two cranked leaves 60 mm	201
	Small butt hinge with one cranked leaf 60 mm	202
	Small butt hinge with one cranked leaf 66 mm	202
	Pin hinge with one cranked leaf	203
	Stainless steel hinge with removable pin	204
	Removable pin hinges with nylon washers	204
	Hinges 62 x 74 mm	205
	Hinge 20 x 65 mm	205
	Hinges 20 x 77mm and 22 x 120 mm	206
	Hinge 25 x 140 mm	206
	Hinges 30 x 140 mm	207
	Hinge 30 x 83 mm	207
	Zinc die-cast hinges 30 mm long	208
	Zinc die-cast hinge 60 mm long	208

INDEX - HINGES

Zinc die-cast hinge 90 x 60 mm	209
Zinc die-cast pin hinge for surface mounted door	209
Zinc die-cast lift-off hinges 25.5 mm	210
Zinc die-cast lift-off hinges 64 x 33 mm	210
Zinc die-cast lift-off hinges 64 x 50 mm	211
Zinc die-cast lift-off hinges 80 mm	211
Bolt-on hinges in 2 parts	212
Bolt-on hinges in 3 parts - 49 mm long	212
Bolt-on hinge in 3 parts - 36 mm long	213
Bolt-on hinge in 3 parts with plate	213
Brass hinge with removable pin - 3 knuckles	214
Brass hinges with removable pin - 4 knuckles	214
Lift-off hinges in aluminium profile with a stainless steel pin	215
Flag hinge with washer - 62 x 62 mm	215
Flag hinge without washer with two offset leaves	216
Flag hinge with washer with two offset leaves	216
Flag hinge without washer - flat knuckle	217
Flag hinge with washer - flat knuckle	217
Flag hinge without washer - drilled - flat knuckle	218
NEW Dual Axis Torque Hinge	219
Glass door hinge in brushed stainless steel	220
Glass door hinge in stainless steel	220

Technical information for pin or lift-off hinges

Way the door opens

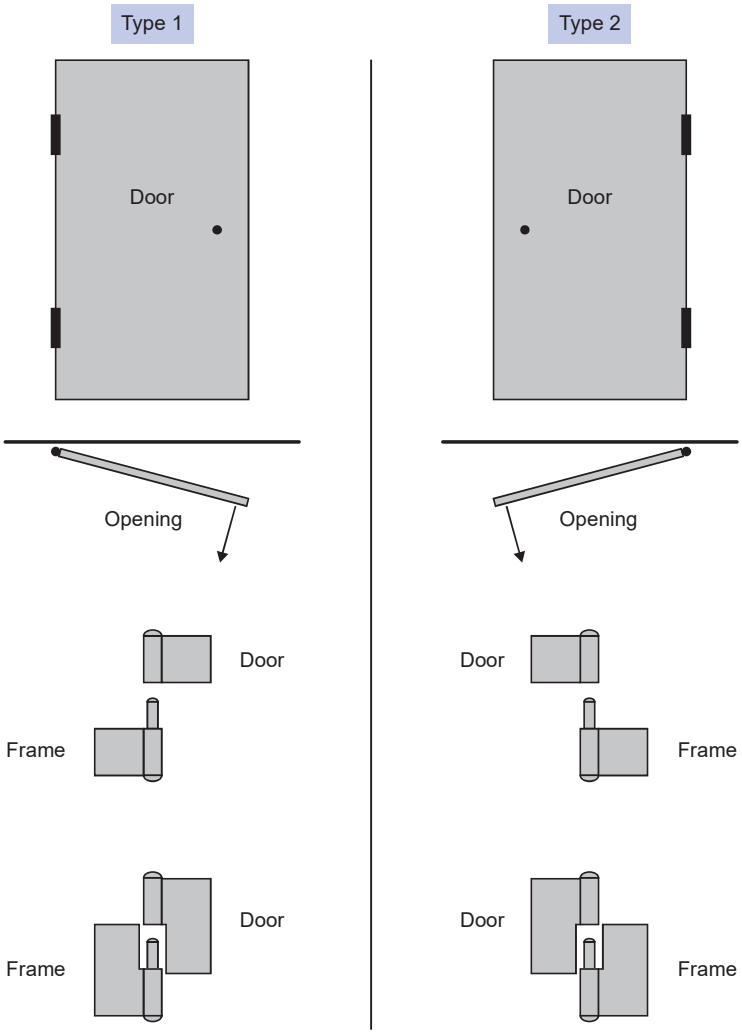

Mounting instruction

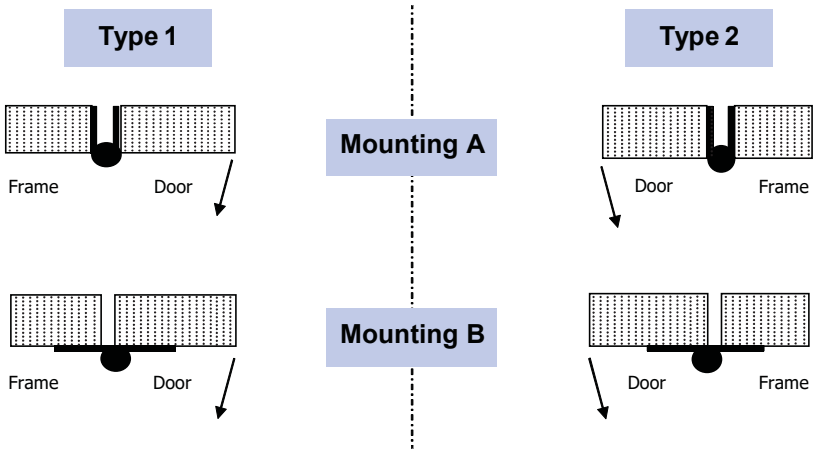

Caution:
Type 1 lift-off hinges mounted as A become Type 2 when mounted as B
Type 2 lift-off hinges mounted as A become Type 1 when mounted as B

Fixing holes configurations

Dimension (S) is the hole diameter.
For countersunk holes, dimension (S) is the inside diameter.

For countersunk holes, depending on hinge thickness and selected screws, different configurations may occur:

A

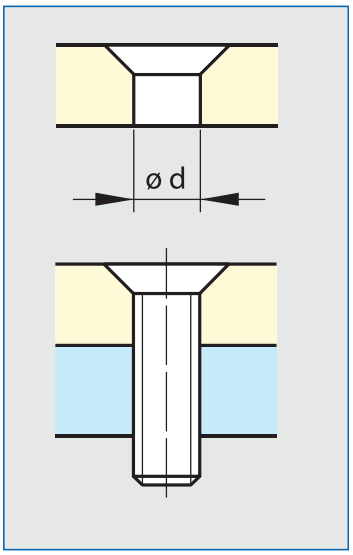

B

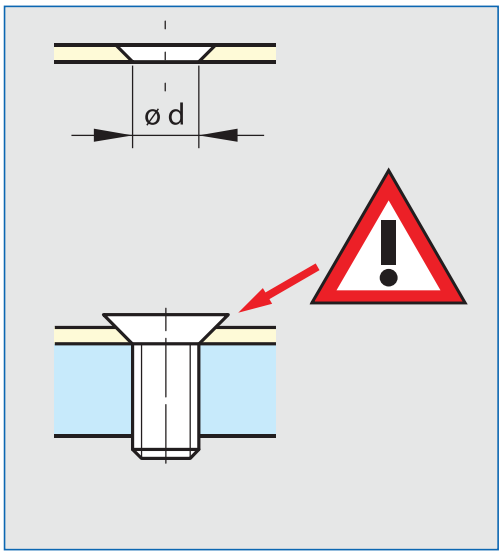

C

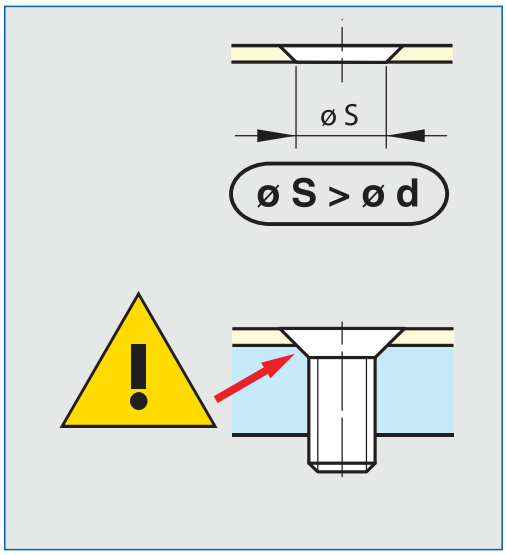

A: ideal situation (hinge thickness is large enough)
B: screw head protrudes from hinge (may occur if hinges are too thin)
C: screw head is flush but the mounting surface has to be enlarged (may occur if hinges are thin)

FinAlu® continuous hinge

NEW

270° ALU RoHS

Continuous hinges in aluminium profile with a small pin diameter.
This nice design can be used in many applications (medical, electronic enclosures, food equipment, transportation...).
These hinges have the same dimensions as hinges used in the aircraft industry.

	Part number	Material	Finish	A	B	C	D	E	Pin material	Note	Weight (g)
	72-1-4243	6082 T5 alu	anodised	915	31.75	1.3	2.2	12.7	stainless steel	undrilled	150
NS	72-1-4338	6082 T5 alu	blue anodised	915	31.75	1.3	2.2	12.7	stainless steel	undrilled	150
NS	72-1-4339	6082 T5 alu	red anodised	915	31.75	1.3	2.2	12.7	stainless steel	undrilled	150
NS	72-1-4340	6082 T5 alu	bronze anodised	915	31.75	1.3	2.2	12.7	stainless steel	undrilled	150
NS	72-1-4341	6082 T5 alu	gold anodised	915	31.75	1.3	2.2	12.7	stainless steel	undrilled	150
	72-1-4244	6082 T5 alu	raw	1830	31.75	1.3	2.2	12.7	stainless steel	undrilled	300
NEW	72-1-4418	6082 T5 alu	anodised	915	38.1	1.3	2.2	12.7	stainless steel	undrilled	170
NEW	72-1-4419	6082 T5 alu	raw	1830	38.1	1.3	2.2	12.7	stainless steel	undrilled	340
	72-1-4245	6082 T5 alu	anodised	915	44.45	1.3	2.2	12.7	stainless steel	undrilled	190
NS	72-1-4342	6082 T5 alu	blue anodised	915	44.45	1.3	2.2	12.7	stainless steel	undrilled	190
NS	72-1-4343	6082 T5 alu	red anodised	915	44.45	1.3	2.2	12.7	stainless steel	undrilled	190
NS	72-1-4344	6082 T5 alu	bronze anodised	915	44.45	1.3	2.2	12.7	stainless steel	undrilled	190
NS	72-1-4345	6082 T5 alu	gold anodised	915	44.45	1.3	2.2	12.7	stainless steel	undrilled	190
	72-1-4246	6082 T5 alu	raw	1830	44.45	1.3	2.2	12.7	stainless steel	undrilled	380
	72-1-4247	6082 T5 alu	anodised	915	63.5	1.3	2.2	12.7	stainless steel	undrilled	250
NS	72-1-4346	6082 T5 alu	blue anodised	915	63.5	1.3	2.2	12.7	stainless steel	undrilled	250
NS	72-1-4347	6082 T5 alu	red anodised	915	63.5	1.3	2.2	12.7	stainless steel	undrilled	250
NS	72-1-4348	6082 T5 alu	bronze anodised	915	63.5	1.3	2.2	12.7	stainless steel	undrilled	250
NS	72-1-4349	6082 T5 alu	gold anodised	915	63.5	1.3	2.2	12.7	stainless steel	undrilled	250
	72-1-4248	6082 T5 alu	raw	1830	63.5	1.3	2.2	12.7	stainless steel	undrilled	500

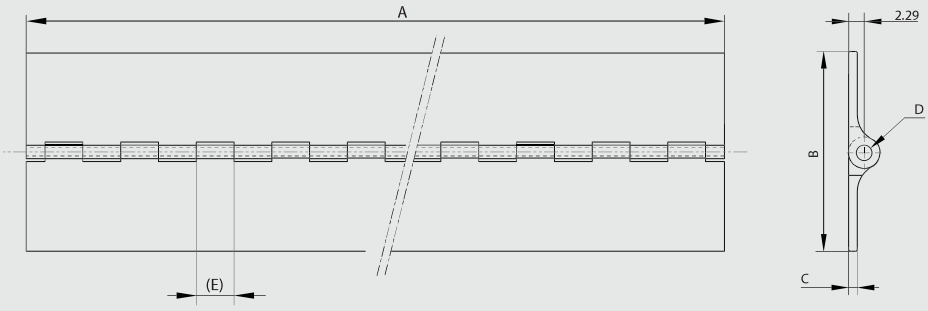

Aluminium profile continuous hinge - 50 mm

270° ALU RoHS

Opening angle 270°. Other lengths are available on request.
Specific drilling requirements are also available on request.

Part number	Material	Finish	A	B	C	D	E	Pin material	Note	Weight (g)
72-1-3316	6060 T5 alu	raw	2000	50	3	5.2	35.5	304 stainless steel	undrilled	1200

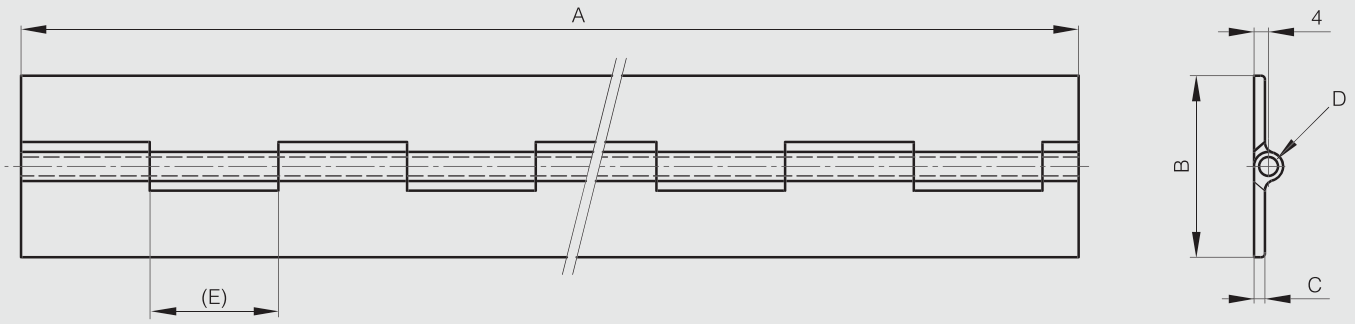

Rolled knuckle continuous hinge - 15 mm width

270° STEEL RoHS

Opening angle 270°. Other lengths and pin materials are available on request.
Specific drilling requirements are also available on request.

Part number	Material	Finish	A	B	C	D	E	Pin material	Note	Weight (g)
40-1-3327	steel	raw	2040	15	0.7	1.5	15	steel	undrilled	260

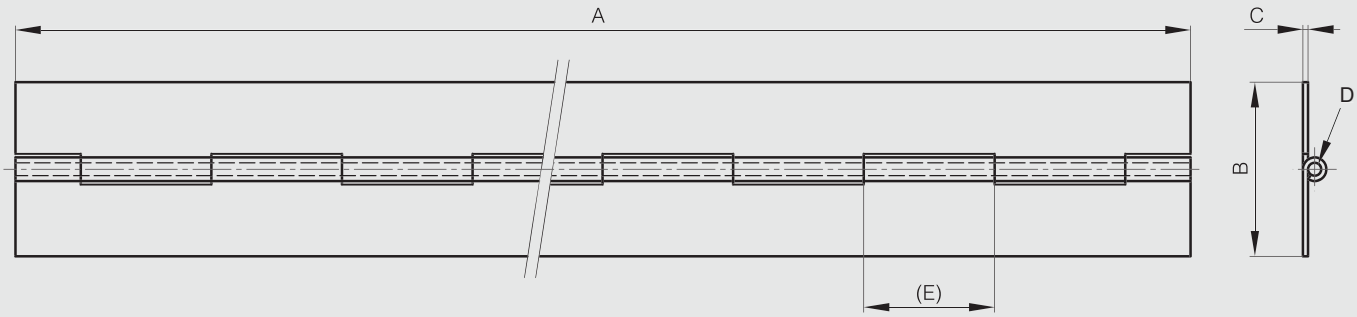

Rolled knuckle continuous hinge - 20 mm width

270° ALU STAINLESS STEEL STEEL RoHS

Opening angle 270°. Other lengths and pin materials are available on request.
Specific drilling requirements are also available on request.

Part number	Material	Finish	A	B	C	D	E	F	G	S	Pin material	Note	Weight (g)
40-1-3328	steel	raw	2040	20	0.8	2	15				steel	undrilled	370
40-1-3321	steel	raw	2040	20	0.8	2	15	11.5	60	2.8	steel	drilled	352
41-1-3529	5754 alu	raw	2000	20	0.6	2.4	15				steel	undrilled	150
42-1-3664	304 stainless steel	raw	2040	20	0.8	2	15				stainless steel	undrilled	377
42-1-4195	304 stainless steel	raw	2040	20	0.8	2	15	11.5	60	2.8	stainless steel	drilled	367

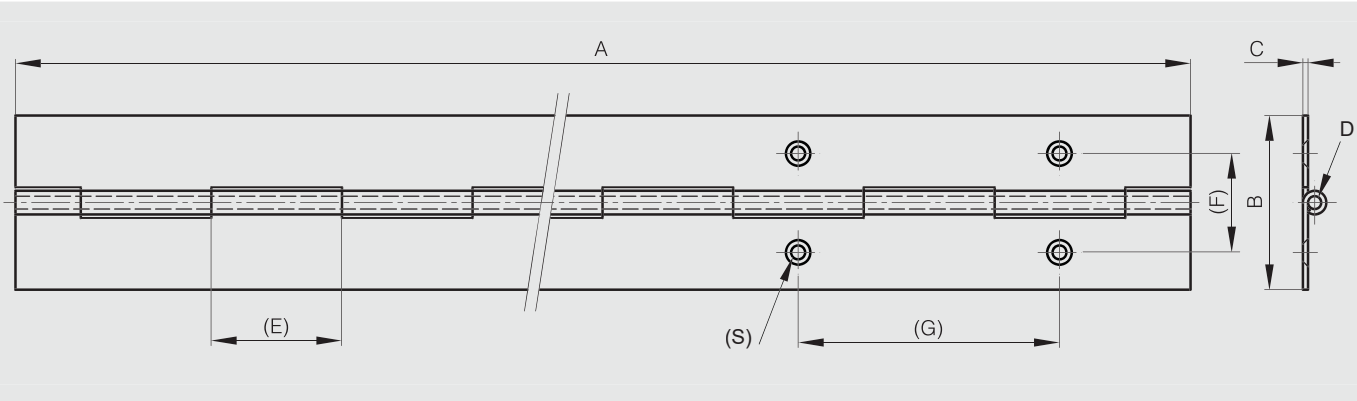

Rolled knuckle continuous hinge - 25 mm width

270° ALU STAINLESS STEEL STEEL RoHS

Opening angle 270°. Other lengths and pin materials are available on request.
Specific drilling requirements are also available on request.
Hinge in raw galvanised steel is made of pregalvanised steel. Therefore any cut surface is ungalvanised.

Part number	Material	Finish	A	B	C	D	E	F	G	S	Pin material	Note	Weight (g)
40-1-3329	steel	raw	2040	25	0.8	2	15				steel	undrilled	440
40-1-3322	steel	raw	2040	25	0.8	2	15	14	60	2.8	steel	drilled	436
40-1-4677	galvanised steel	raw	1800	25	1.2	3	30				brass	undrilled	626
41-1-3559	5754 alu	raw	1000	25	0.8	2	15				steel	undrilled	90
42-1-3910	304 stainless steel	raw	1020	25	0.8	2	15				stainless steel	undrilled	280
42-1-3767	304 stainless steel	raw	2040	25	0.8	2	15				stainless steel	undrilled	448
42-1-4196	304 stainless steel	raw	2040	25	0.8	2	15	14	60	3.6	stainless steel	drilled	437
42-1-4096	304 stainless steel	raw	1800	25	1	2	15				stainless steel	undrilled	500
42-1-3949	304 stainless steel	raw	2040	25	1	2	15				stainless steel	undrilled	558
42-1-4546	316L stainless steel	raw	1980	25	0.8	2	15				stainless steel	undrilled	445

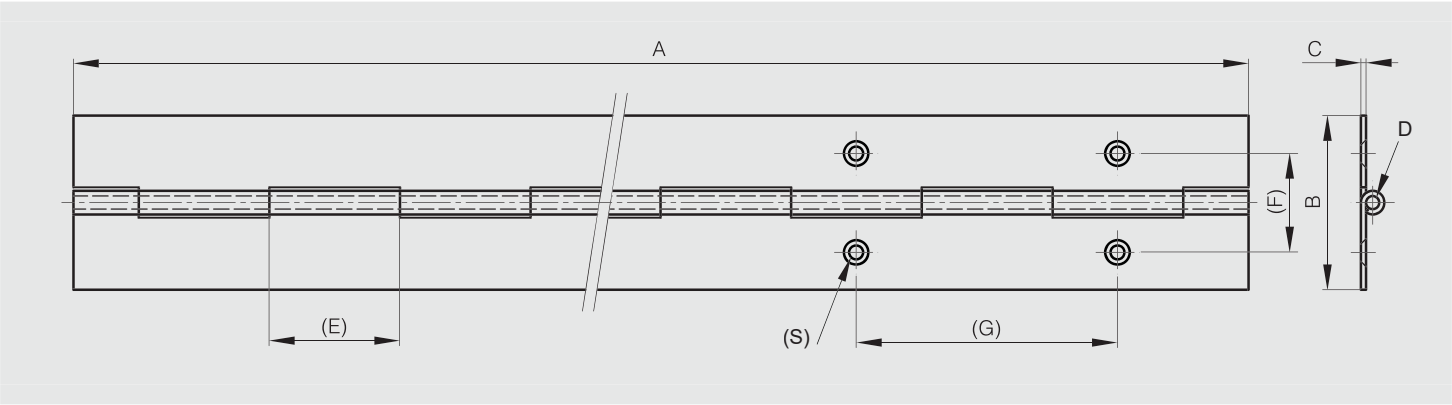

Rolled knuckle continuous hinge - 30 mm width

270° ALU STAINLESS STEEL STEEL RoHS

Opening angle 270°. Other lengths and pin materials are available on request.
Specific drilling requirements are also available on request.

Part number	Material	Finish	A	B	C	D	E	F	G	S	Pin material	Note	Weight (g)
40-1-3330	steel	raw	2040	30	0.8	2	15				steel	undrilled	510
40-1-3323	steel	raw	2040	30	0.8	2	15	16.8	60	3.9	steel	drilled	490
40-1-3679	steel	raw	2040	30	1	2	15				steel	undrilled	640
40-1-3680	steel	raw	2040	30	1	2	15	16.8	60	3.9	steel	drilled	640
40-1-4370	steel	raw	2000	30	2	6	30				steel	undrilled	1800
41-1-3560	5754 alu	raw	1980	30	1	2	15				aluminium	undrilled	205
42-1-3909	304 stainless steel	raw	1020	30	0.8	2	15				stainless steel	undrilled	255
42-1-3580	304 stainless steel	raw	2040	30	0.8	2	15				stainless steel	undrilled	522
42-1-4089	304 stainless steel	raw	1800	30	1	2	15				stainless steel	undrilled	500
42-1-3300	304 stainless steel	raw	2040	30	1	2	15				stainless steel	undrilled	670
42-1-4197	304 stainless steel	raw	2040	30	1	2	15	16.8	60	3.9	stainless steel	drilled	640
42-1-3950	304 stainless steel	raw	1995	30	1.5	4	30				stainless steel	undrilled	1283
42-1-3948	304 stainless steel	raw	1995	30	2	6	25				stainless steel	undrilled	1880
42-1-4082	316L stainless steel	raw	1020	30	1	2	15				stainless steel	undrilled	337
42-1-4000	316L stainless steel	raw	2040	30	1	2	15				stainless steel	undrilled	670

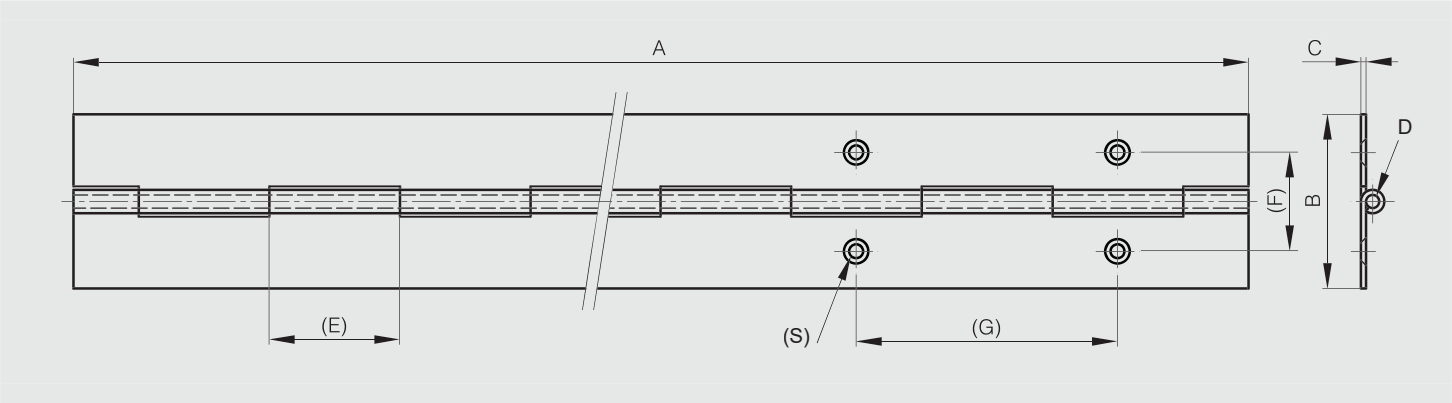

Rolled knuckle continuous hinge - 32 mm width

270° STAINLESS STEEL STEEL RoHS

Opening angle 270°. Other lengths and pin materials are available on request.
Specific drilling requirements are also available on request.

Part number	Material	Finish	A	B	C	D	E	Pin material	Note	Weight (g)
40-1-4771	steel	raw	1950	32	1.5	3	12.5	steel	undrilled	1030
42-1-4346	304 stainless steel	raw	1800	32	1.2	3	30	stainless steel	undrilled	810
42-1-4460	304 stainless steel	raw	1950	32	1.5	3	12.5	stainless steel	undrilled	1030

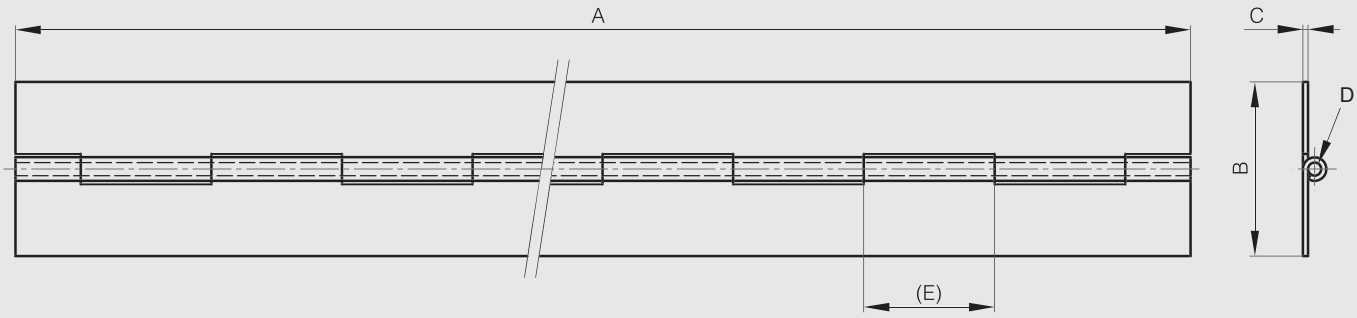

Rolled knuckle continuous hinge - 35 mm width

270° ALU STEEL RoHS

Opening angle 270°. Other lengths and pin materials are available on request.
Specific drilling requirements are also available on request.

Part number	Material	Finish	A	B	C	D	E	F	G	S	Pin material	Note	Weight (g)
40-1-3332	steel	raw	2040	35	1	2	15				steel	undrilled	700
40-1-3324	steel	raw	2040	35	1	2	15	19.5	60	4.5	steel	drilled	690
41-1-3532	5754 alu	raw	1995	35	1	3	30				aluminium	undrilled	262

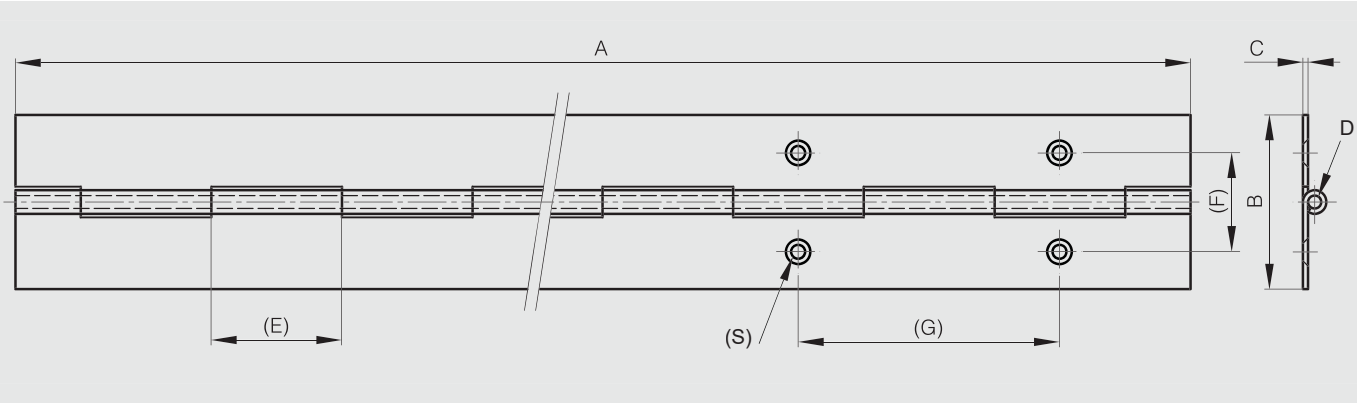

Rolled knuckle continuous hinge - 40 mm width

270° ALU STAINLESS STEEL STEEL RoHS

Opening angle 270°. Other lengths and pin materials are available on request.
Specific drilling requirements are also available on request.
Hinge in raw galvanised steel is made of pregalvanised steel. Therefore any cut surface is ungalvanised.

Part number	Material	Finish	A	B	C	D	E	F	G	S	Pin material	Note	Weight (g)
40-1-3703	steel	raw	2040	40	0.8	2	15				steel	undrilled	650
40-1-3681	steel	raw	2040	40	1.2	3	30				steel	undrilled	1077
40-1-3682	steel	raw	2040	40	1.2	3	30	22.7	60	4.2	steel	drilled	1081
40-1-4772	steel	raw	1950	40	1.5	3	12.5				steel	undrilled	1230
40-1-3683	steel	raw	2040	40	1.5	4	15				steel	undrilled	1403
40-1-4691	galvanised steel	raw	1800	40	1.2	3	30				brass	undrilled	1520
41-1-3540	5754 alu	raw	1000	40	1.2	3	30				aluminium	undrilled	180
41-1-3520	5754 alu	raw	2040	40	1.2	3	30				aluminium	undrilled	356
41-1-3521	5754 alu	raw	2000	40	1.5	4	15				aluminium	undrilled	500
42-1-4257	304 stainless steel	raw	1020	40	1.2	3	30				stainless steel	undrilled	530
42-1-4347	304 stainless steel	raw	1800	40	1.2	3	30				stainless steel	undrilled	940
42-1-4350	304 stainless steel	raw	2040	40	1.2	3	30				stainless steel	undrilled	1068
42-1-4349	304 stainless steel	raw	2040	40	1.2	3	30	22.7	60	4.2	stainless steel	drilled	1045
42-1-4461	304 stainless steel	raw	1950	40	1.5	3	12.5				stainless steel	undrilled	1230
42-1-3301	304 stainless steel	raw	2040	40	1.5	4	15				stainless steel	undrilled	1420
42-1-4199	304 stainless steel	raw	2040	40	1.5	4	15	22.7	60	4	stainless steel	drilled	1441
42-1-3770	304 stainless steel	raw	2040	44	2	6	30				stainless steel	undrilled	2463
42-1-4083	316L stainless steel	raw	1020	40	1.5	4	15				stainless steel	undrilled	700
42-1-4001	316L stainless steel	raw	2040	40	1.5	4	15				stainless steel	undrilled	1400
42-1-3665	430 stainless steel	raw	2040	40	0.8	2	15				stainless steel	undrilled	650

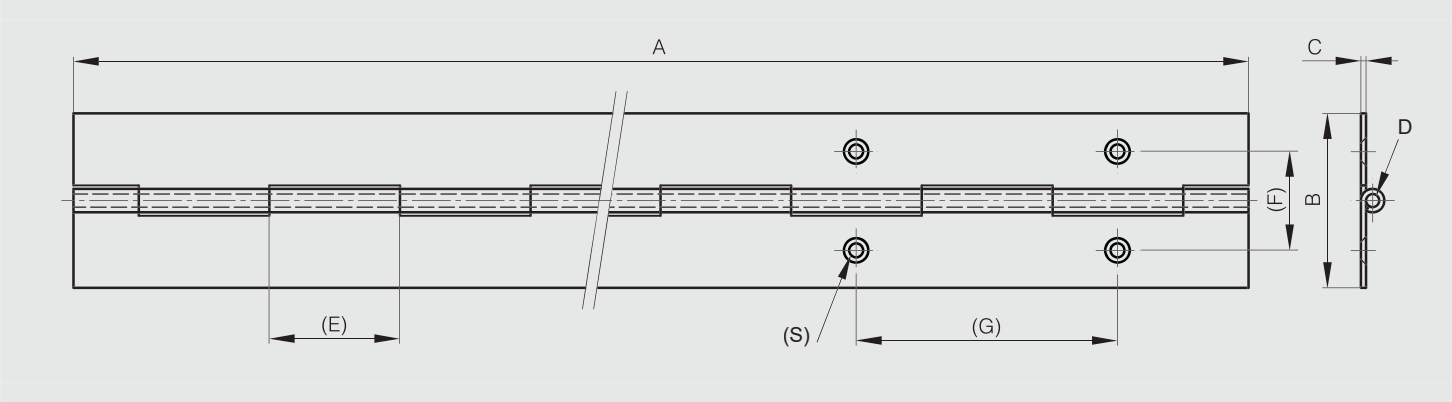

Rolled knuckle continuous hinge - 50 mm width

270° ALU STAINLESS STEEL STEEL RoHS

Opening angle 270°. Other lengths and pin materials are available on request.
Specific drilling requirements are also available on request.
Hinge in raw galvanised steel is made of pregalvanised steel. Therefore any cut surface is ungalvanised.

Part number	Material	Finish	A	B	C	D	E	F	G	S	Pin material	Note	Weight (g)
40-1-3704	steel	raw	2040	50	1.2	3	30				steel	undrilled	1317
40-1-3758	steel	raw	2040	50	1.2	3	30	28	60	4	steel	drilled	1270
40-1-4773	steel	raw	1950	50	1.5	3	12.5				steel	undrilled	1460
40-1-4355	steel	raw	2040	50	2	6	30				steel	undrilled	2540
40-1-4679	galvanised steel	raw	1800	50	1.2	3	30				brass	undrilled	1800
41-1-3531	5754 alu	raw	2040	50	1.2	3	30				aluminium	undrilled	459
41-1-3541	5754 alu	raw	1000	50	1.5	4	15				aluminium	undrilled	306
41-1-3522	5754 alu	raw	2000	50	1.5	4	15				aluminium	undrilled	612
42-1-4258	304 stainless steel	raw	1020	50	1.2	3	30				stainless steel	undrilled	650
42-1-4348	304 stainless steel	raw	1800	50	1.2	3	30				stainless steel	undrilled	1112
42-1-4353	304 stainless steel	raw	2040	50	1.2	3	30				stainless steel	undrilled	1300
42-1-4352	304 stainless steel	raw	2040	50	1.2	3	30	28	60	4	stainless steel	drilled	1270
42-1-4462	304 stainless steel	raw	1950	50	1.5	3	12.5				stainless steel	undrilled	1450
42-1-4219	304 stainless steel	raw	1800	50	1.5	4	15				stainless steel	undrilled	1500
42-1-3918	304 stainless steel	raw	1995	50	2	4	25				stainless steel	undrilled	2350
42-1-4259	316L stainless steel	raw	1000	50	1.2	3	30				stainless steel	undrilled	655
42-1-4354	316L stainless steel	raw	2040	50	1.2	3	30				stainless steel	undrilled	1310

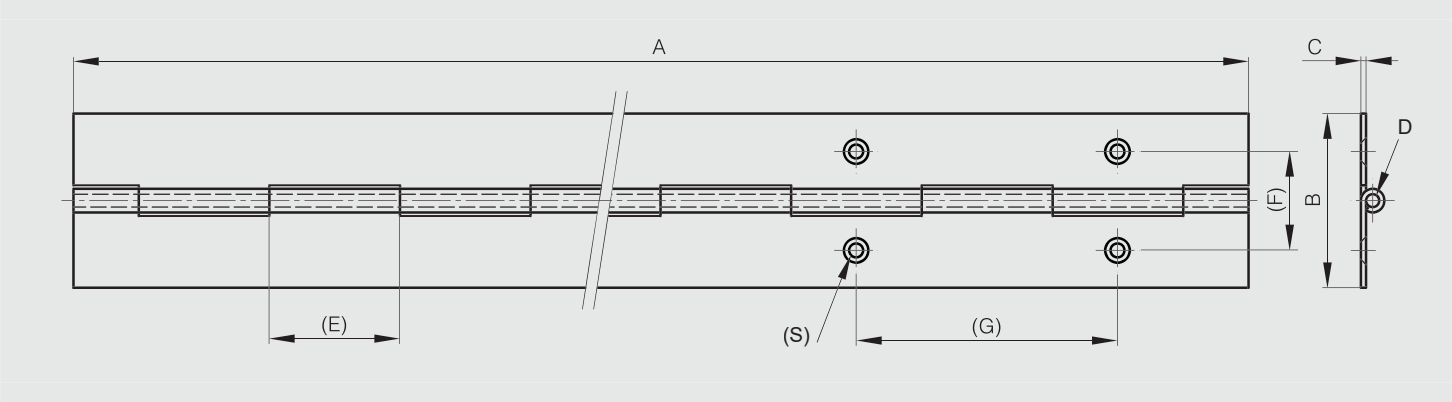

Rolled knuckle continuous hinge - 57 mm width

270° STAINLESS STEEL STEEL RoHS

Opening angle 270°. Other lengths and pin materials are available on request.
Specific drilling requirements are also available on request.
Hinge in raw galvanised steel is made of pregalvanised steel. Therefore any cut surface is ungalvanised.

Part number	Material	Finish	A	B	C	D	E	Pin material	Note	Weight (g)
40-1-4680	galvanised steel	raw	2160	57	1.5	4	15	brass	undrilled	2000
40-1-4682	galvanised steel	raw	2160	57	2	6	30	brass	undrilled	2970
42-1-4220	304 stainless steel	raw	2160	57	1.5	4	15	stainless steel	undrilled	2000

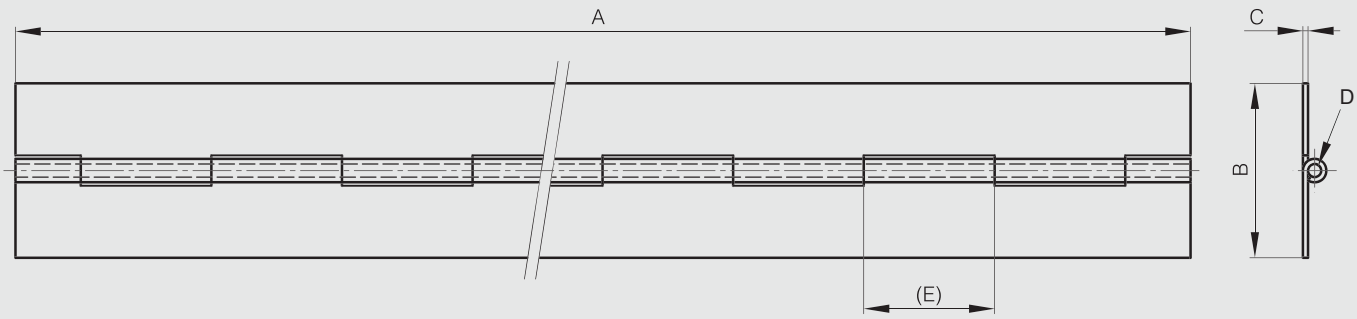

Rolled knuckle continuous hinge - 60 mm width

270° ALU STAINLESS STEEL STEEL RoHS

Opening angle 270°. Other lengths and pin materials are available on request.
Specific drilling requirements are also available on request.

Part number	Material	Finish	A	B	C	D	E	F	G	S	Pin material	Note	Weight (g)
40-1-3541	steel	raw	1995	60	1.5	5	40				steel	undrilled	2006
40-1-3335	steel	raw	2000	60	1.5	8	40				steel	undrilled	2622
40-1-4371	steel	raw	2040	60	2	6	30				steel	undrilled	2800
41-1-3523	5754 alu	raw	1995	60	2	6	30				aluminium	undrilled	998
42-1-4086	304 stainless steel	raw	1020	60	2	6	30				stainless steel	undrilled	1400
42-1-3302	304 stainless steel	raw	2040	60	2	6	30				stainless steel	undrilled	2844
42-1-4201	304 stainless steel	raw	2040	60	2	6	30	35	60	4	stainless steel	drilled	2800
42-1-4085	316L stainless steel	raw	1020	60	2	6	30				stainless steel	undrilled	1470
42-1-4002	316L stainless steel	raw	2040	60	2	6	30				stainless steel	undrilled	2913

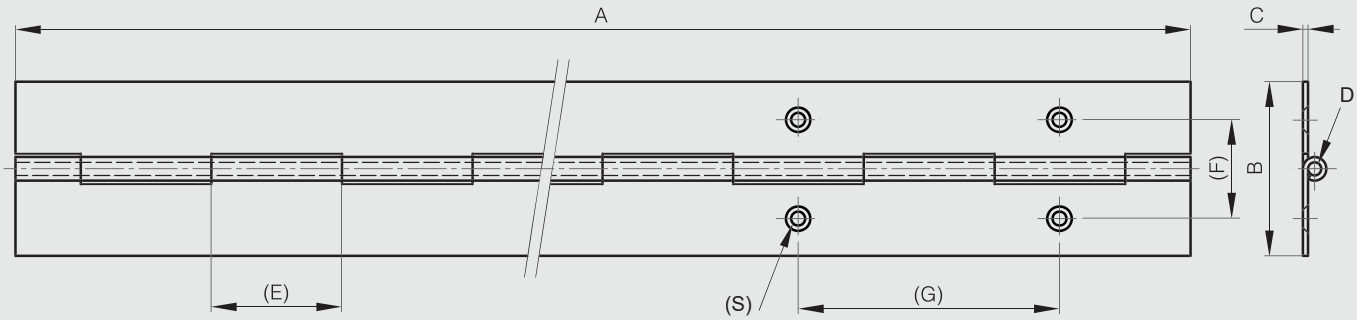

Rolled knuckle continuous hinge - 63 mm width

Opening angle 270°. Other lengths and pin materials are available on request.
Specific drilling requirements are also available on request.

Part number	Material	Finish	A	B	C	D	E	Pin material	Note	Weight (g)
42-1-4221	304 stainless steel	raw	1800	63	1.5	4	15	stainless steel	undrilled	1800

Rolled knuckle continuous hinge - 70 mm width

Opening angle 270°. Other lengths and pin materials are available on request.
Specific drilling requirements are also available on request.

Part number	Material	Finish	A	B	C	D	E	Pin material	Note	Weight (g)
40-1-4372	steel	raw	2040	70	2	6	30	steel	undrilled	3218
42-1-4097	304 stainless steel	raw	1800	70	1.5	4	15	stainless steel	undrilled	1900
42-1-3859	304 stainless steel	raw	2040	70	2	6	30	stainless steel	undrilled	3219

Rolled knuckle continuous hinge - 76 mm width

Opening angle 270°. Other lengths and pin materials are available on request.
Specific drilling requirements are also available on request.
Hinge in raw galvanised steel is made of pregalvanised steel. Therefore any cut surface is ungalvanised.

Part number	Material	Finish	A	B	C	D	E	Pin material	Note	Weight (g)
40-1-4681	galvanised steel	raw	2160	76	1.5	4	15	brass	undrilled	2952
42-1-4094	304 stainless steel	raw	2160	76	1.5	4	15	stainless steel	undrilled	2400

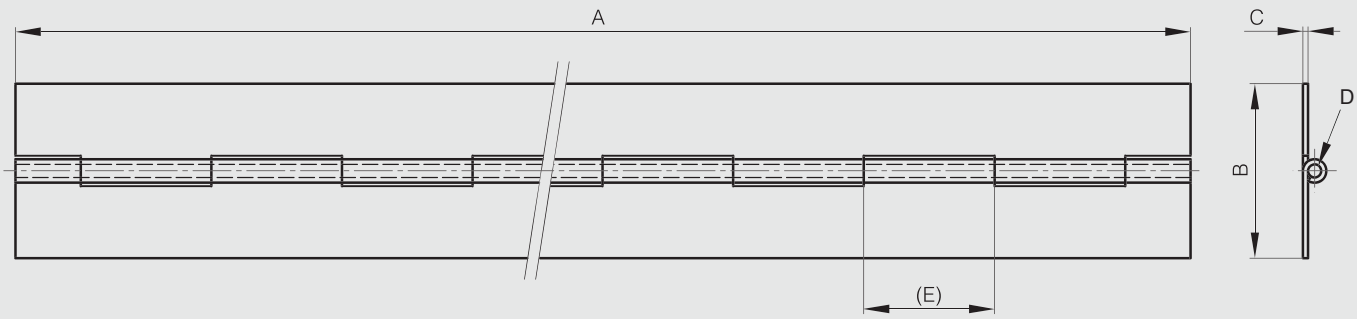

Rolled knuckle continuous hinge - 80 mm width

270° ALU STAINLESS STEEL STEEL RoHS

Opening angle 270°. Other lengths and pin materials are available on request.
Specific drilling requirements are also available on request.

Part number	Material	Finish	A	B	C	D	E	F	G	S	Pin material	Note	Weight (g)
40-1-4774	steel	raw	1950	80	1.5	3	12.5				steel	undrilled	2170
40-1-3542	steel	raw	2000	80	2	7.6	40				steel	undrilled	3900
40-1-4369	steel	raw	2000	80	3	6	40				steel	undrilled	5060
41-1-3558	5754 alu	raw	1995	80	3	6	40				aluminium	undrilled	1780
42-1-4463	304 stainless steel	raw	1950	80	1.5	3	12.5				stainless steel	undrilled	2170
42-1-3304	304 stainless steel	raw	1000	80	3	6	40				stainless steel	undrilled	2530
42-1-3569	304 stainless steel	raw	2000	80	3	6	40				stainless steel	undrilled	5060
42-1-4547	304 stainless steel	raw	2000	80	3	6	40	35	60	5.2	stainless steel	drilled	5000
42-1-4548	316L stainless steel	raw	1980	80	2	6	30				stainless steel	undrilled	3470

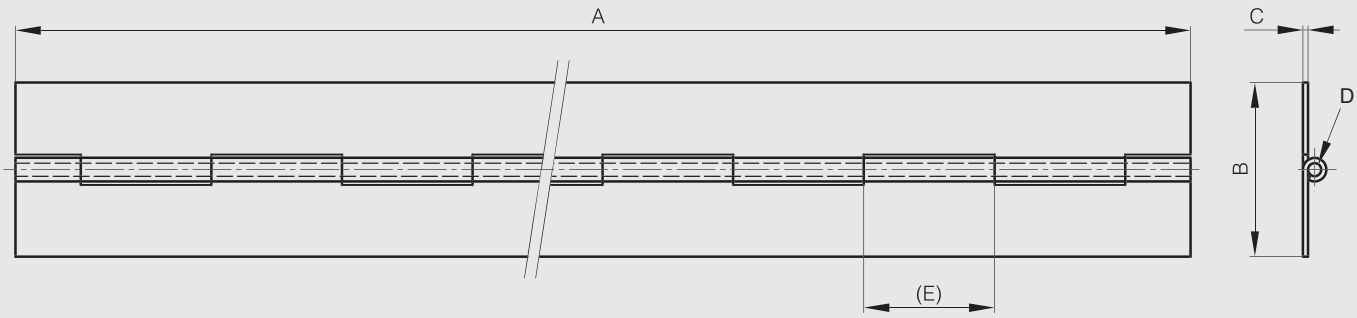

Rolled knuckle continuous hinge - 100 mm width

270° ALU STAINLESS STEEL STEEL RoHS

Opening angle 270°. Other lengths and pin materials are available on request.
Specific drilling requirements are also available on request.

Part number	Material	Finish	A	B	C	D	E	Pin material	Note	Weight (g)
40-1-3543	steel	raw	2000	100	3	10	40	steel	undrilled	7100
40-1-4769	steel	raw	1000	100	4	10	40	steel	undrilled	4690
41-1-3561	5754 alu	raw	1000	100	4	10	40	steel	undrilled	2030
42-1-4458	304 stainless steel	raw	1995	100	3	10	40	stainless steel	undrilled	7110
42-1-4459	304 stainless steel	raw	2000	100	3	6	40	stainless steel	undrilled	5930

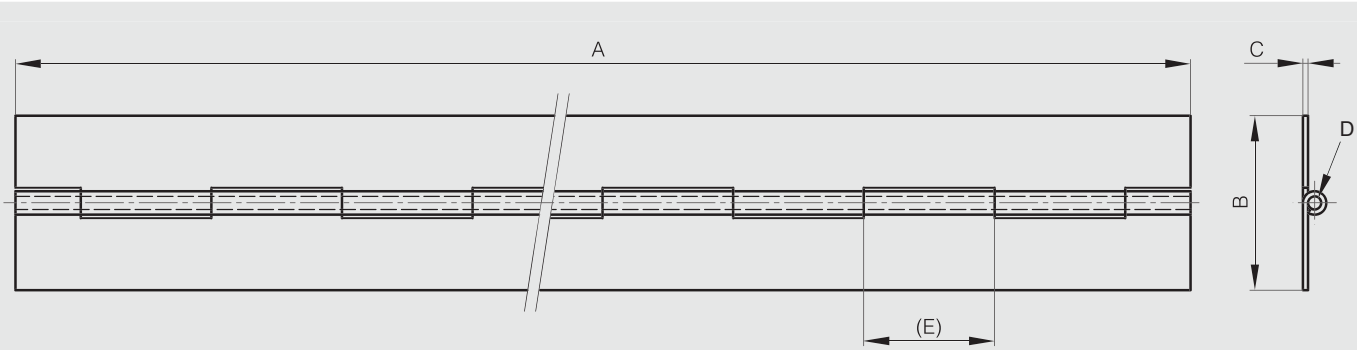

Rolled knuckle continuous hinge - 120 mm width

Opening angle 270°. Other lengths and pin materials are available on request.
Specific drilling requirements are also available on request.

Part number	Material	Finish	A	B	C	D	E	Pin material	Note	Weight (g)
40-1-4770	steel	raw	1000	120	5	10	40	steel	undrilled	6550
42-1-4095	304 stainless steel	raw	2100	120	2	6	30	stainless steel	undrilled	5000

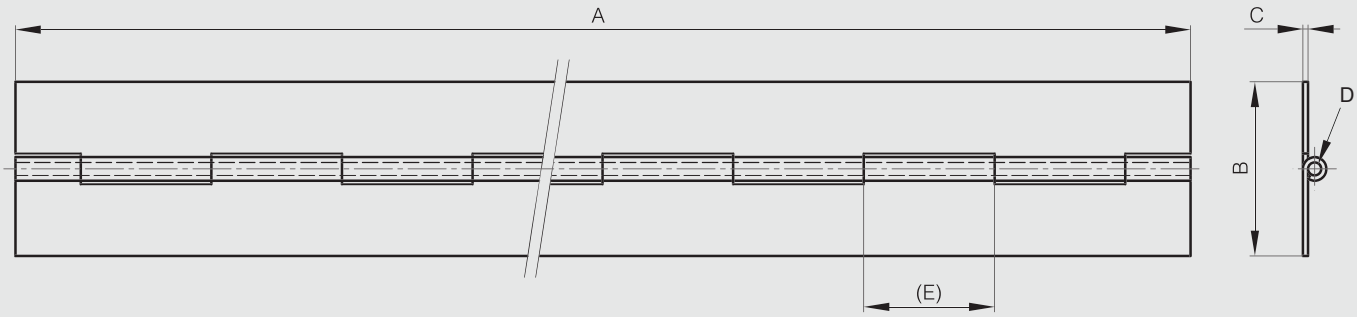

Rolled knuckle continuous hinge - 127 mm width

Opening angle 270°. Other lengths and pin materials are available on request.
Specific drilling requirements are also available on request.
Hinge in raw galvanised steel is made of pregalvanised steel. Therefore any cut surface is ungalvanised.

Part number	Material	Finish	A	B	C	D	E	Pin material	Note	Weight (g)
40-1-4685	galvanised steel	raw	2160	127	3	6	40	brass	undrilled	8000

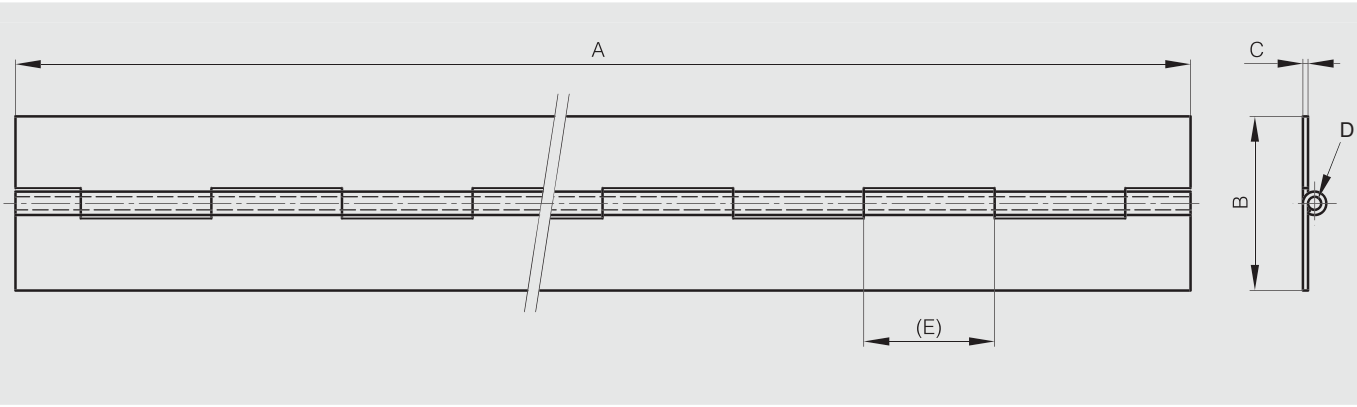

Interleaf continuous hinge

NEW

270° STAINLESS STEEL

The hinge sits directly on door frame for minimal gap (3mm).
Aesthetically stylish.
Maintenance free polymer shrouded bearings.

Tested to BS EN1935 Grade 14 (160kgs).

Produced mainly in stainless steel, for a complete description of the materials contact us.

	Part number	Material	Finish	A	B	C	D	E	S	Note	Weight (g)
NEW	42-7-4610	304 stainless steel	satin polished	2134	70.5	2.5	7	147	9	drilled	3400

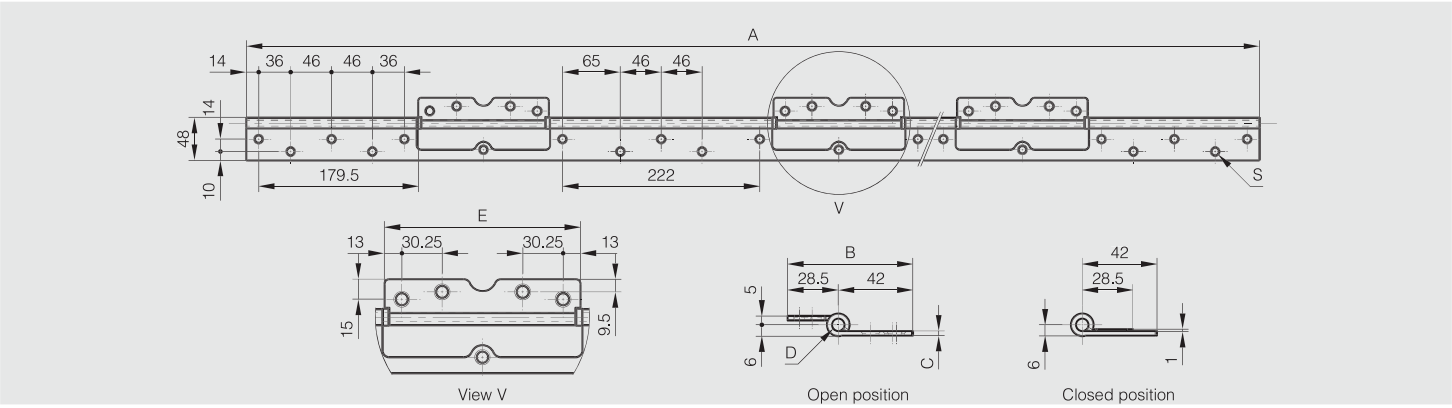

Polymer continuous hinges in 15.25 meter rolls

Technical features:
- Temperature: -40°C up to +80°C.
- Can be fixed with: rivets, screws, nails or clamps.
- Chemical resistance: oil, solvents, sea water and most chemical agents.
- Tensile resistance: 180 N/cm.
- Material offers excellent fatigue resistance.

Part number	Material	Finish	B	C	Weight (g)
44-7-3000	polypropylene	white	28.6	3.2	1080
44-7-3001	polypropylene	grey	28.6	3.2	1080
44-7-3002	polypropylene	black	28.6	3.2	1080
44-7-3003	polypropylene	white	38.1	3.2	1450
44-7-3004	polypropylene	grey	38.1	3.2	1450
44-7-3005	polypropylene	black	38.1	3.2	1450
44-7-3006	polypropylene	white	50.8	3.2	2300
44-7-3007	polypropylene	grey	50.8	3.2	2300
44-7-3008	polypropylene	black	50.8	3.2	2300
44-7-3009	polypropylene	white	76.2	3.2	3100
44-7-3010	polypropylene	grey	76.2	3.2	3100
44-7-3011	polypropylene	black	76.2	3.2	3100

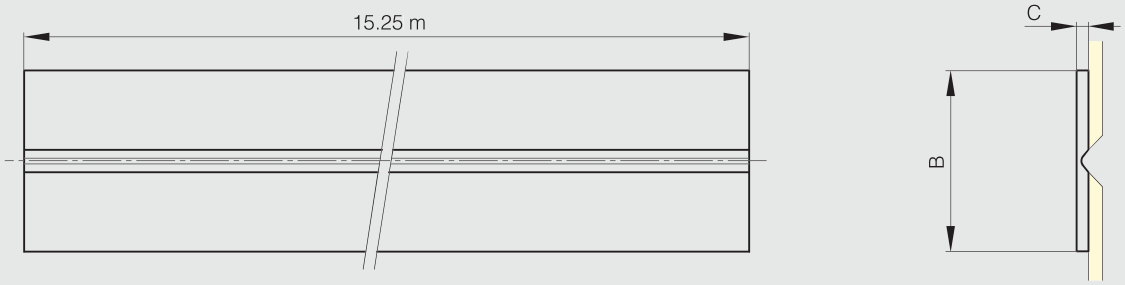

Drilled continuous hinge with one cranked leaf

Opening angle 270°. Other lengths and pin materials are available on request.
Specific drilling requirements are also available on request.

Part number	Material	Finish	A	B	C	D	E	F	G	H	S	Pin material	Note	Weight (g)
39-1-3631	steel	zinc plated	2000	31.5	1	2	30	7.5	60	20	3.5	304 stainless steel	drilled	860
39-1-3630	304 stainless steel	raw	1995	31.5	1	2	30	7.5	60	20	3.5	304 stainless steel	drilled	860

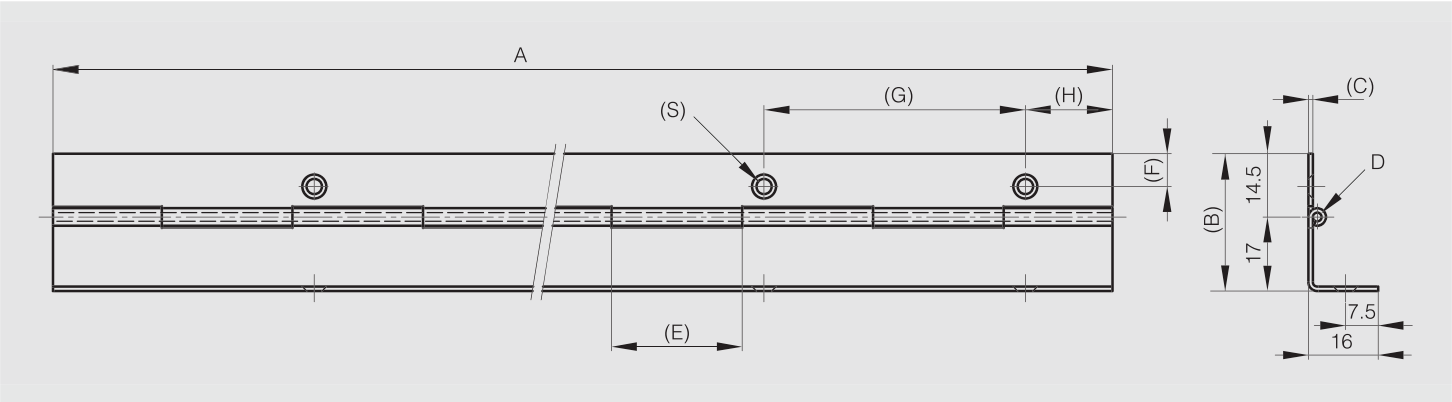

Undrilled continuous hinge with one cranked leaf

Opening angle 270°. Other lengths and pin materials are available on request.
Specific drilling requirements are also available on request.

Part number	Material	Finish	A	B	C	D	E	Pin material	Note	Weight (g)
39-1-3632	steel	zinc plated	1995	44	1.5	3	25	304 stainless steel	undrilled	1756
39-1-3633	304 stainless steel	raw	1995	44	1.5	3	25	304 stainless steel	undrilled	1859
39-1-3300	430 stainless steel	raw	1600	44	1.5	3	25	304 stainless steel	undrilled	1430

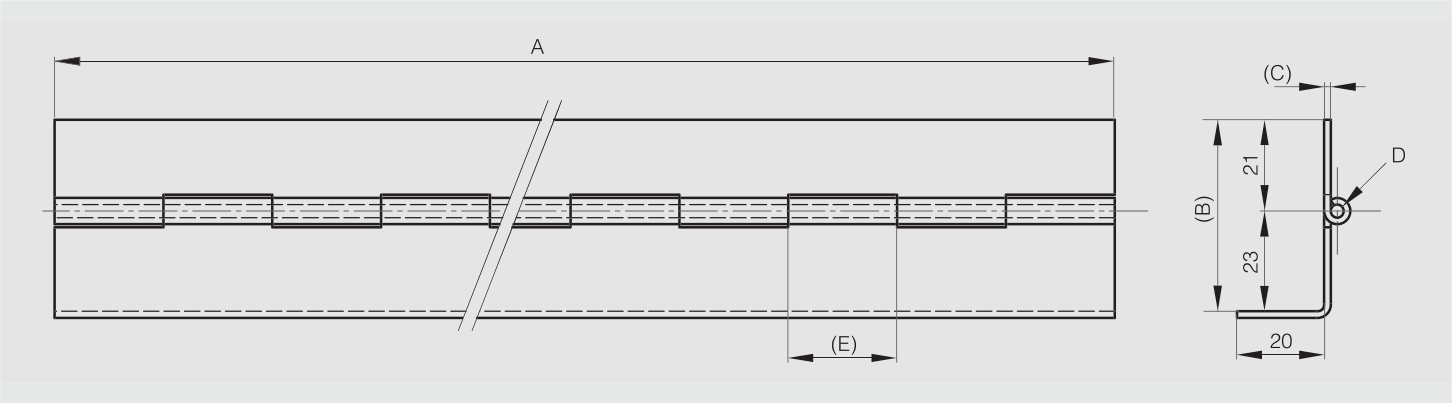

Continuous hinge with two cranked leaves

270° STAINLESS STEEL STEEL RoHS

Opening angle 270°. Other lengths and pin materials are available on request.
Specific drilling requirements are also available on request.

Part number	Material	Finish	A	B	C	D	E	Pin material	Note	Weight (g)
39-1-3634	steel	zinc plated	1995	46	1.5	3	25	304 stainless steel	undrilled	1910
39-1-3635	304 stainless steel	raw	2000	46	1.5	3	25	304 stainless steel	undrilled	1944

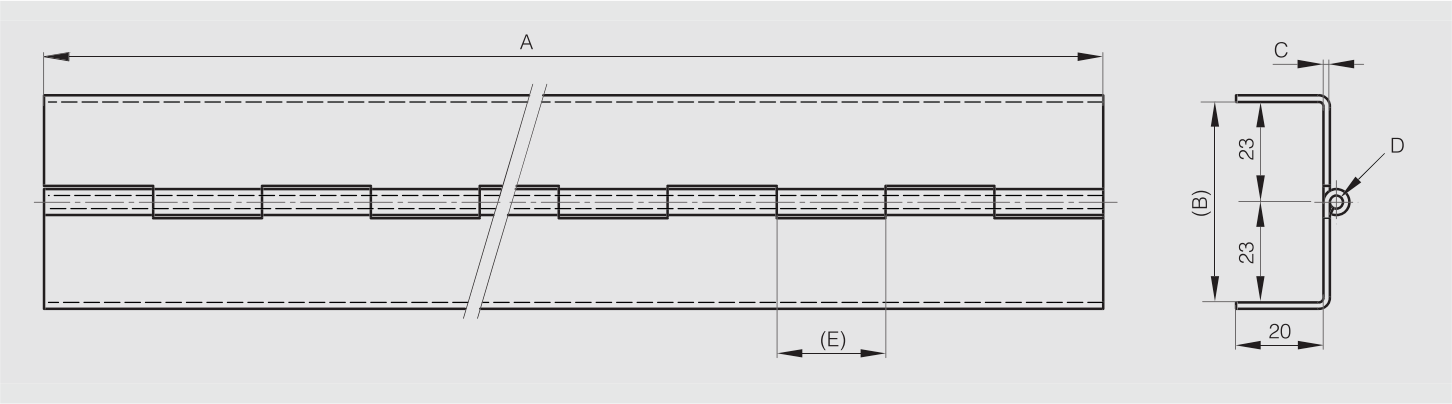

Rolled knuckle continuous hinge “Imperial” dimension

270° STAINLESS STEEL RoHS

Part number	Material	Finish	A	B	C	D	E	Pin material	Note	Weight (g)
42-1-4089 UK	304 stainless steel	raw	6’	1″ 1/4	0.04″	0.08″	5/8″	stainless steel	undrilled	500
42-1-4094 UK	304 stainless steel	raw	7’	3″	1/16″	5/32″	5/8″	stainless steel	undrilled	2400
42-1-4095 UK	304 stainless steel	raw	7’	5″	0.08″	1/4″	1″ 1/4	stainless steel	undrilled	5000
42-1-4096 UK	304 stainless steel	raw	6’	1″	0.04″	0.08″	5/8″	stainless steel	undrilled	500
42-1-4097 UK	304 stainless steel	raw	6’	2″ 3/4	1/16″	5/32″	5/8″	stainless steel	undrilled	1900
42-1-4219 UK	304 stainless steel	raw	6’	2″	1/16″	5/32″	5/8″	stainless steel	undrilled	1500
42-1-4220 UK	304 stainless steel	raw	7’	2″ 1/4	1/16″	5/32″	5/8″	stainless steel	undrilled	2000
42-1-4221 UK	304 stainless steel	raw	6’	2″ 1/2	1/16″	5/32″	5/8″	stainless steel	undrilled	1800
42-1-4346 UK	304 stainless steel	raw	6’	1″ 1/4	3/64″	1/8″	3/4″	stainless steel	undrilled	810
42-1-4347 UK	304 stainless steel	raw	6’	1″ 1/2	3/64″	1/8″	3/4″	stainless steel	undrilled	940
42-1-4348 UK	304 stainless steel	raw	6’	2″	3/64″	1/8″	3/4″	stainless steel	undrilled	1112

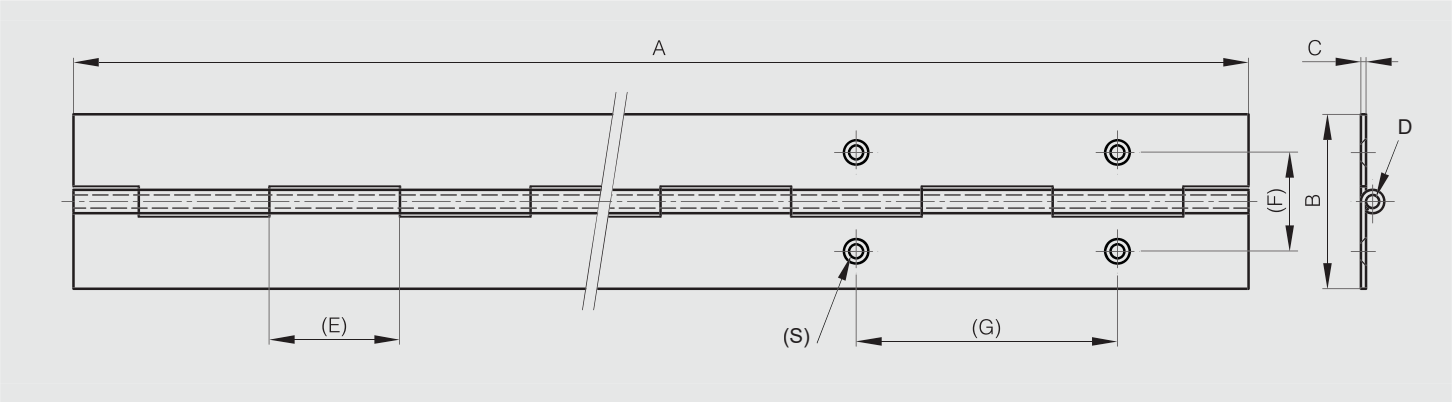

Double knuckle continuous hinge

180° ALU RoHS

Hinge in aluminium profile for 180° opening angle.
Delivered without watertight gasket (to be ordered separately).
With fixed friction washers.
Non-drilled hinges.

Part number	Material	Finish	A	D	K	Pin material	Weight (g)
73-1-3520	6060 T5 alu	clear anodised	2000	5	65	304 stainless steel	2500
73-1-3521	6060 T5 alu	clear anodised	2500	5	15	304 stainless steel	3140
73-1-3522	6060 T5 alu	clear anodised	3000	5	115	304 stainless steel	3780

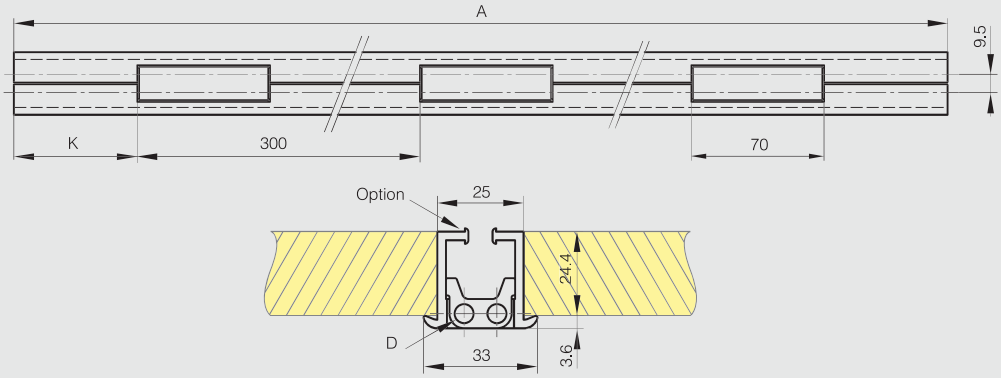

Seal gasket for double knuckle continuous hinge

POLYMER RoHS

Gasket made of soft rubber with a steel clip-on core and foam rubber.

Part number	Material	A	Weight (g)
27-1-3816	reinforced rubber profile	2000	235
27-1-3817	reinforced rubber profile	2500	317
27-1-3818	reinforced rubber profile	3000	405

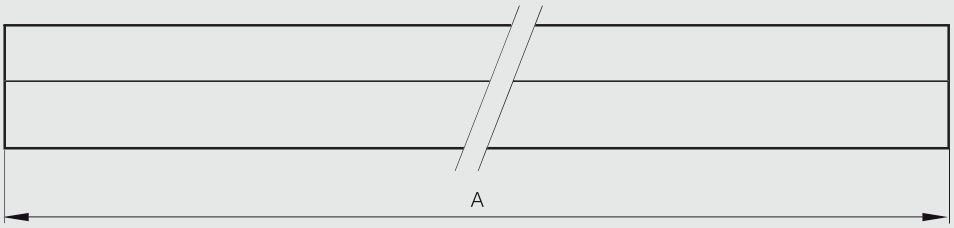

Humidity drain gasket

Moisture collector to be positionned on the floor in line with the double knuckle hinge (when closed).

POLYMER RoHS

Part number	Material	A	B	Weight (g)
99-7-3691	polyurethane	27.6	21	4

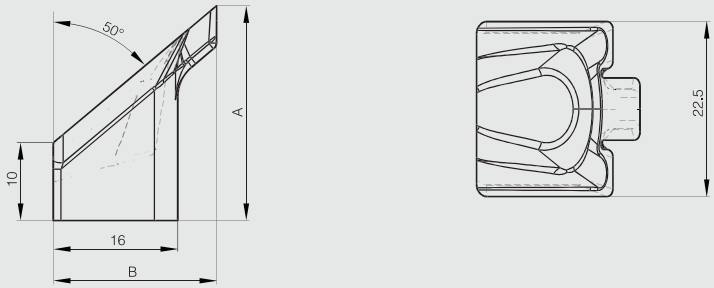

Concealed hinges A - 120° opening

120° STAINLESS STEEL STEEL RoHS

Zinc plated steel version: small flat side in raw steel.
Natural POM pin diameter 6.
For pin with groove, optimal use of circlips DIN 6799 RS4 or O-ring 99-7-3723 (on request).
Produced mainly in stainless steel, for a complete description of the materials contact us.

Part number	Material	Finish	A	C	D	Pin material	Weight (g)
60-1-3760	steel	zinc plated	60	2.5	6	zinc plated pin	99
60-1-3779	steel	zinc plated	60	2.5	6	zinc plated grooved pin	100
60-1-3761	steel	zinc plated	60	2.5	6	Delrin POM pin	85
62-1-3570	304 stainless steel	raw	60	2.5	6	304 stainless steel pin	99
62-1-3584	304 stainless steel	raw	60	2.5	6	303 stainless steel grooved pin	98
62-1-3571	304 stainless steel	raw	60	2.5	6	Delrin POM pin	85

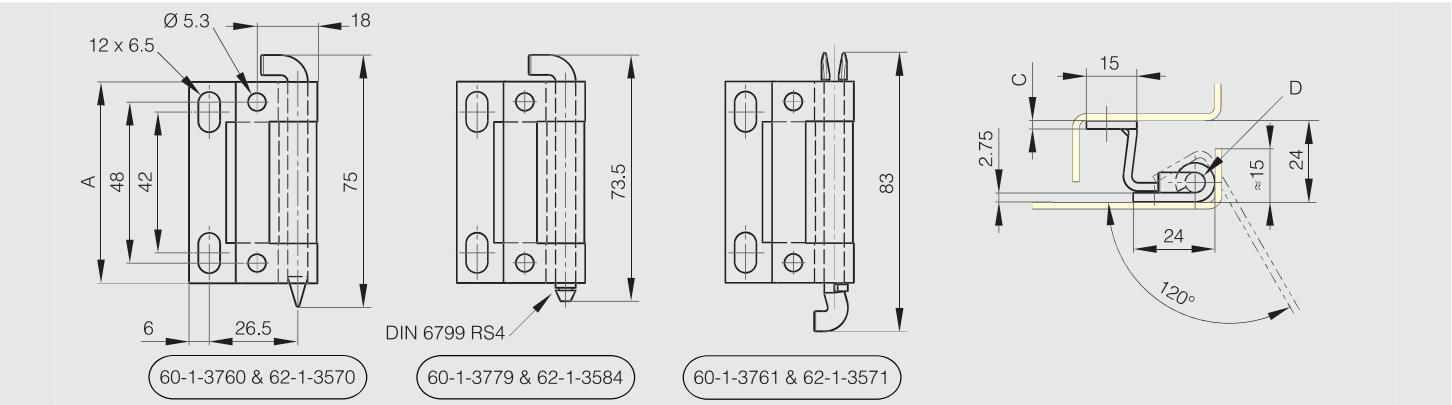

Concealed hinges B - 120° opening

120° STAINLESS STEEL STEEL RoHS

Zinc plated steel version: small flat side in raw steel.
Natural POM pin diameter 6.
For pin with groove, optimal use of circlips DIN 6799 RS4 or O-ring 99-7-3723 (on request).
Produced mainly in stainless steel, for a complete description of the materials contact us.

Part number	Material	Finish	A	C	D	Pin material	Weight (g)
60-1-3762	steel	zinc plated	60	2.5	6	zinc plated pin	93
60-1-3778	steel	zinc plated	60	2.5	6	zinc plated grooved pin	92
60-1-3763	steel	zinc plated	60	2.5	6	Delrin POM pin	79
62-1-3572	304 stainless steel	raw	60	2.5	6	304 stainless steel pin	91
62-1-3585	304 stainless steel	raw	60	2.5	6	303 stainless steel grooved pin	91
62-1-3573	304 stainless steel	raw	60	2.5	6	Delrin POM pin	75

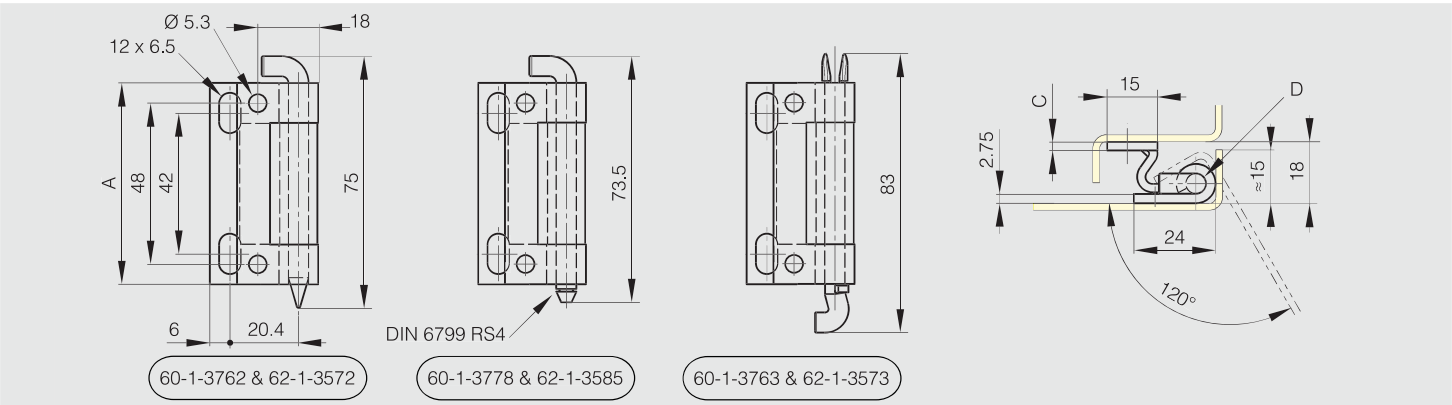

Concealed hinge with removable pin - 110° opening

110° STEEL RoHS

Male leaf in raw steel.
Female leaf in zinc plated steel with stud.
Removable pin in POM.

Part number	Material	Finish	A	B	C	Pin material	Note	Weight (g)
60-1-3918	steel	raw / zinc plated	50	18	1.5	POM pin	male leaf in raw steel	42

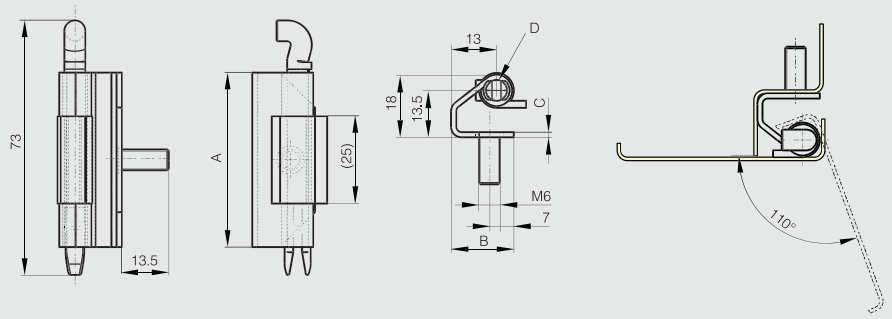

Concealed hinges with retractable pin

120° STAINLESS STEEL RoHS

Quick-release concealed hinge for tool-free door removal with fixed retractable pin.

Part number	Material	Finish	A	B	E	W	Weight (g)
62-1-9000	304 stainless steel	raw	126	17.5	3	122°	95
62-1-9001	304 stainless steel	raw	126	20.5	4	117°	102
62-1-9002	304 stainless steel	raw	126	23.9	4.5	112°	105

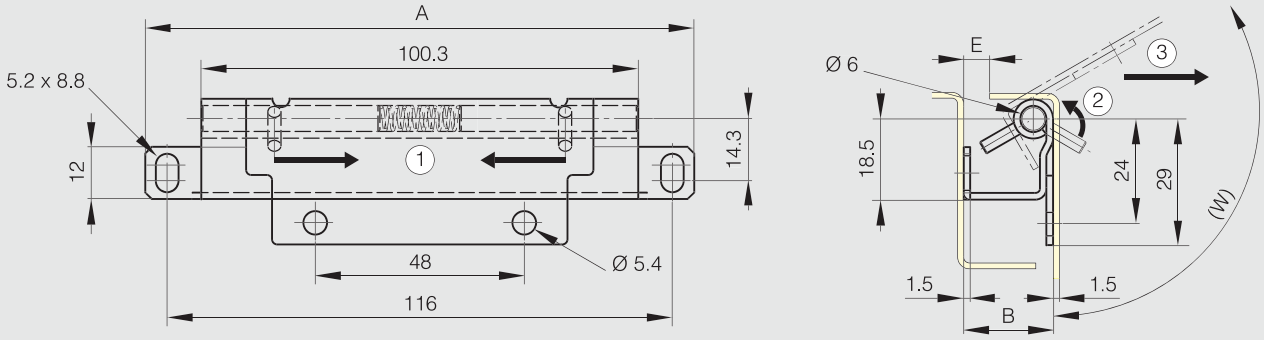

Concealed pin hinges - 100° opening

100° STAINLESS STEEL STEEL RoHS

Non handed fitting.
Removable pin in 304 stainless steel.

Part number	Material	Finish	A	C	D	E	Weight (g)
12-1-3537	steel	raw	80	2	4	40	45
12-1-3538	304 stainless steel	raw	80	2	4	40	45

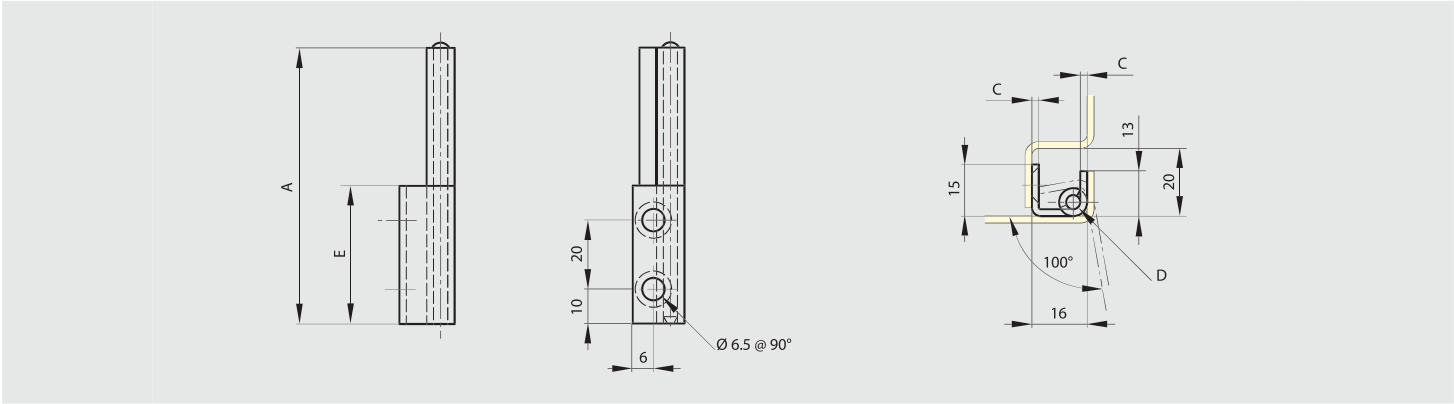

Concealed pin hinges - 120° opening

120° STAINLESS STEEL STEEL RoHS

Non handed fitting.
Removable pin in 304 stainless steel.

Part number	Material	Finish	A	C	D	E	Weight (g)
12-1-3524	steel	raw	80	3	6	40	107
12-1-3528	304 stainless steel	raw	80	3	6	40	107

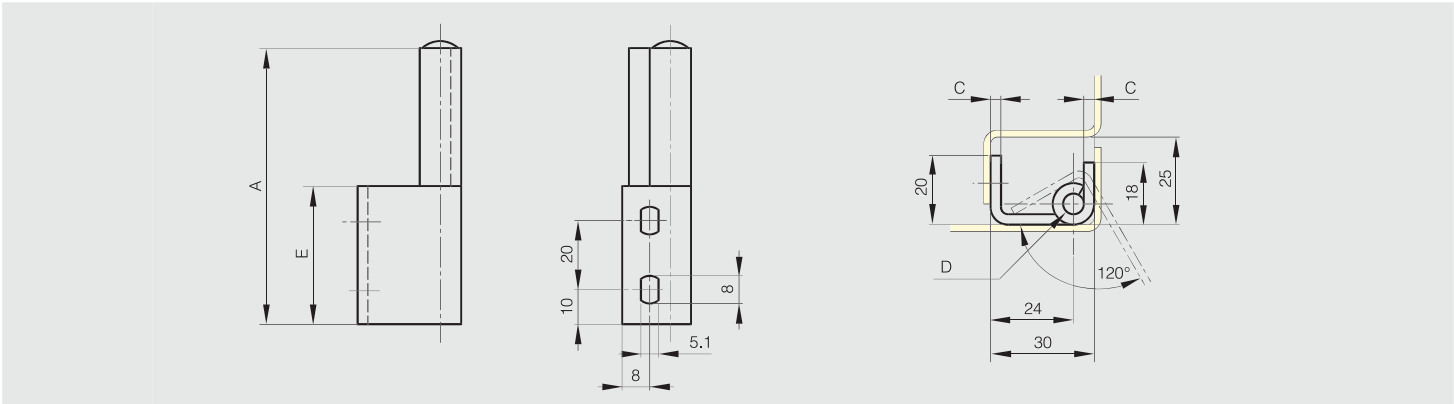

Concealed hinges with spring - 95° opening

90° STAINLESS STEEL STEEL RoHS

Concealed hinges with 2 positions:
- Rest position: door remains open with an angle of 10°.
- Opened position: door opens up to 95°.

Closing of door due to spring action and door remains slightly opened.
Applications for parcel box:
- Door automatically opens after code entry.
- Door doesn't remain in opened position.

Part number	Material	Finish	A	B	C	D	Weight (g)
71-1-3812	steel	zinc plated	51	75	3	6	200
71-1-3867	304 stainless steel	raw	51	75	3	6	200

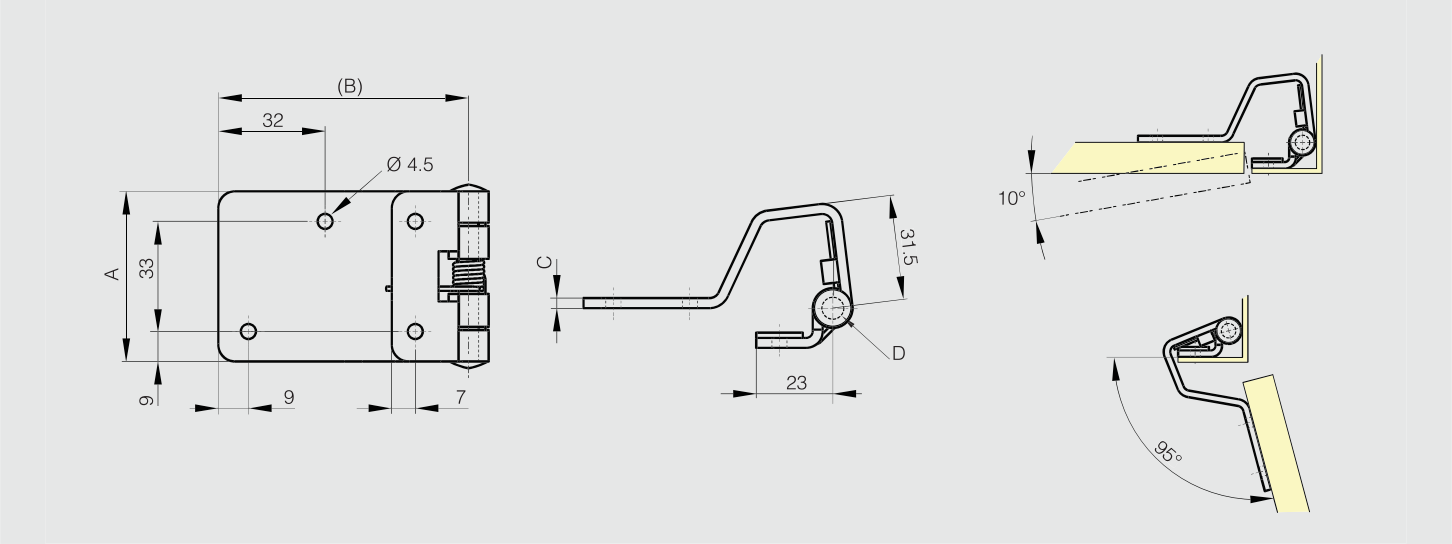

Concealed hinges without spring - 95° opening

90° STAINLESS STEEL STEEL RoHS

Part number	Material	Finish	A	B	C	D	Weight (g)
60-1-4007	steel	zinc plated	51	75	3	6	210
62-1-4008	304 stainless steel	raw	51	75	3	6	210

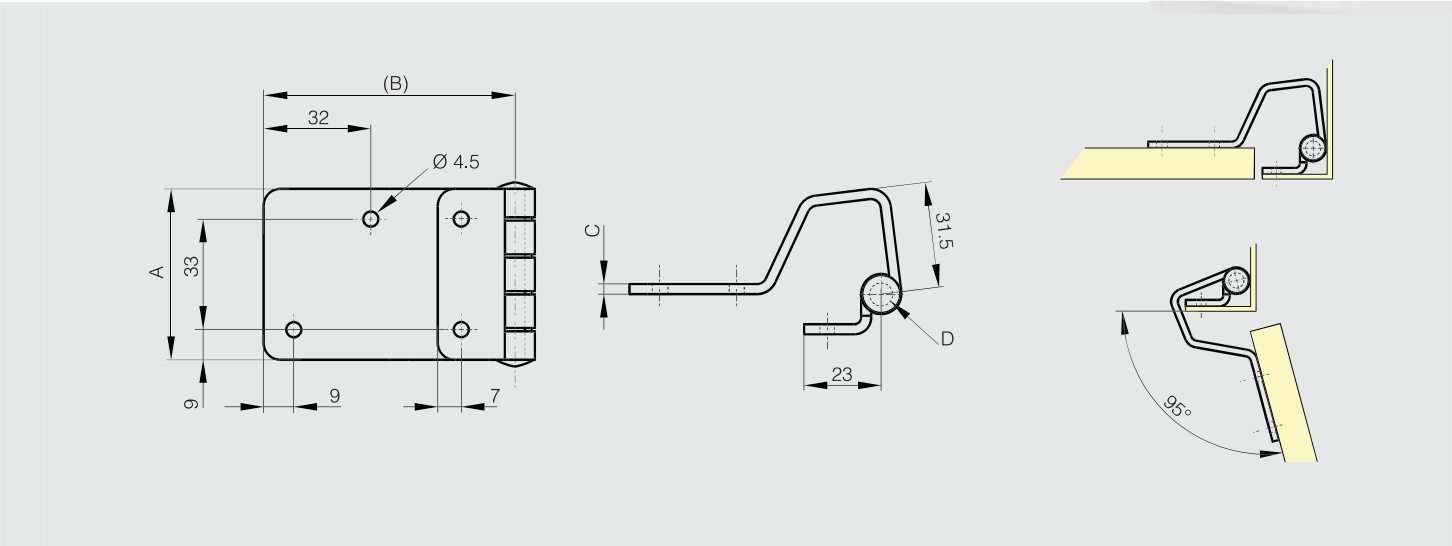

Concealed hinge with friction - 90° opening

90° STAINLESS STEEL RoHS

Initial torque (0.7 N.m) may vary from -20% to +40%.
For indoor use only.
Can be used both for horizontal and vertical applications.
Cycle life: 20,000 cycles.
Produced mainly in stainless steel, for a complete description of the materials contact us.

Part number	Material	Finish	A	B	C	Torque	Weight (g)
70-7-3623	304 stainless steel	polished	40	67	29.5	0.7 N.m	51

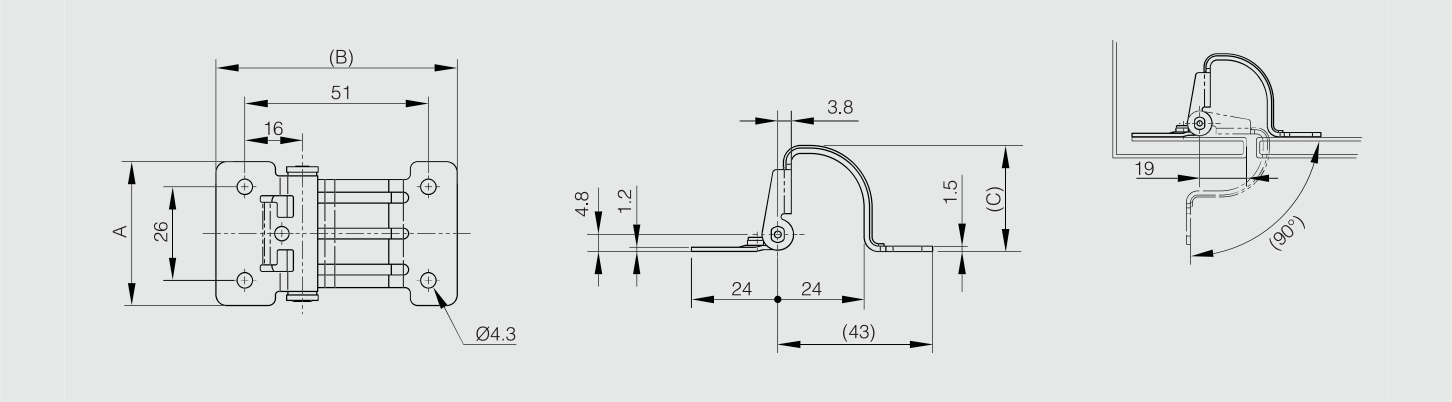

Concealed hinge with friction - 130° opening

NEW

130° STAINLESS STEEL RoHS

Initial torque (0.7 N.m) may vary from -20% to +40%.
For indoor use only.
Can be used both for horizontal and vertical applications.
Cycle life: 20,000 cycles.
Pin: 303 stainless steel
Produced mainly in stainless steel, for a complete description of the materials contact us.

	Part number	Material	Finish	A	B	C	Torque	Weight (g)
NEW	70-7-3658	304 stainless steel	polished	40	61	30	0.7 N.m	88

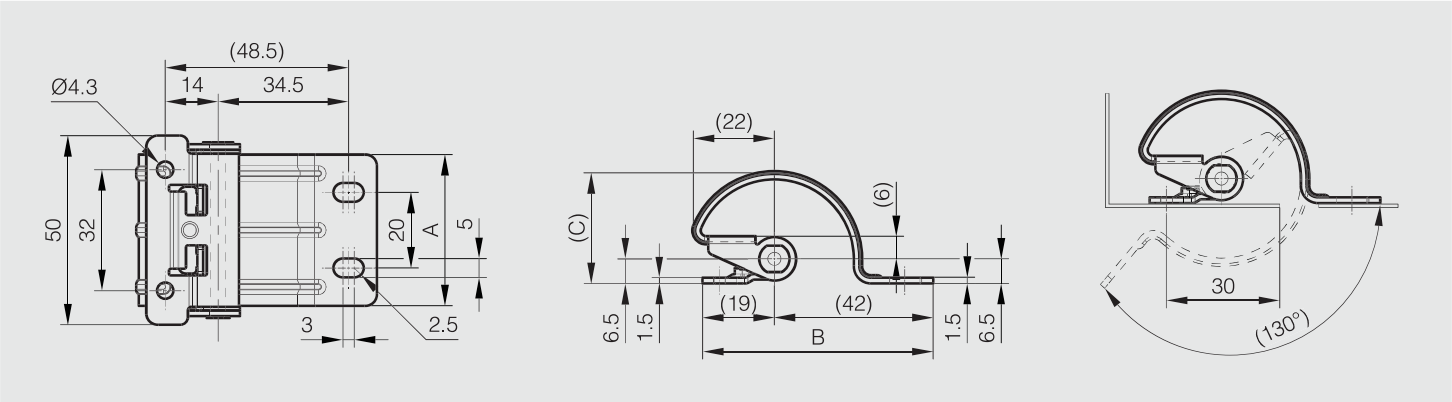

Concealed hinge - 180° opening

180° STAINLESS STEEL RoHS

Part number	Material	Finish	A	B	C	D	E	F	S	Weight (g)
70-7-3544	304 stainless steel	satin	50	19	38	14	18.2	11	2.7	33

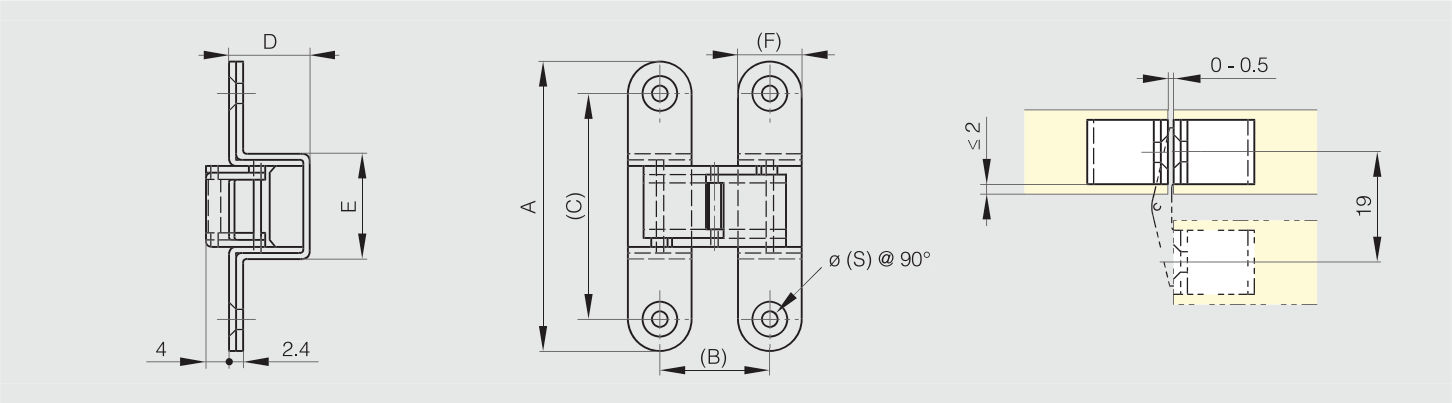

Multi link concealed hinges - 180° opening

Links and pins: 303 and 304 stainless steel or steel.

180° ZAMAK

Part number	Material	Finish	A	B	C	D	E	F	G	H	S	X	Y	Weight (g)
70-7-3539	zinc die-cast	chrome plated satin	43	18	32	13	11	22	5	5	3.5	≤ 2.3	0.8	37
70-7-3540	zinc die-cast	chrome plated satin	45	22.7	32	18.5	13	19	5	6	3.5	≤ 3	0.8	55
70-7-3541	zinc die-cast	chrome plated satin	60	22.2	47	18.5	13	33	6.5	6.5	4.3	≤ 3	1	103
70-7-3542	zinc die-cast	chrome plated satin	70	26.6	53	23	16.1	35	7	9	4.6	≤ 3.5	1.2	167
70-7-3543	zinc die-cast	chrome plated satin	100	33.2	80	27.5	20	52	9.5	9.5	5.3	≤ 4.8	1.8	350

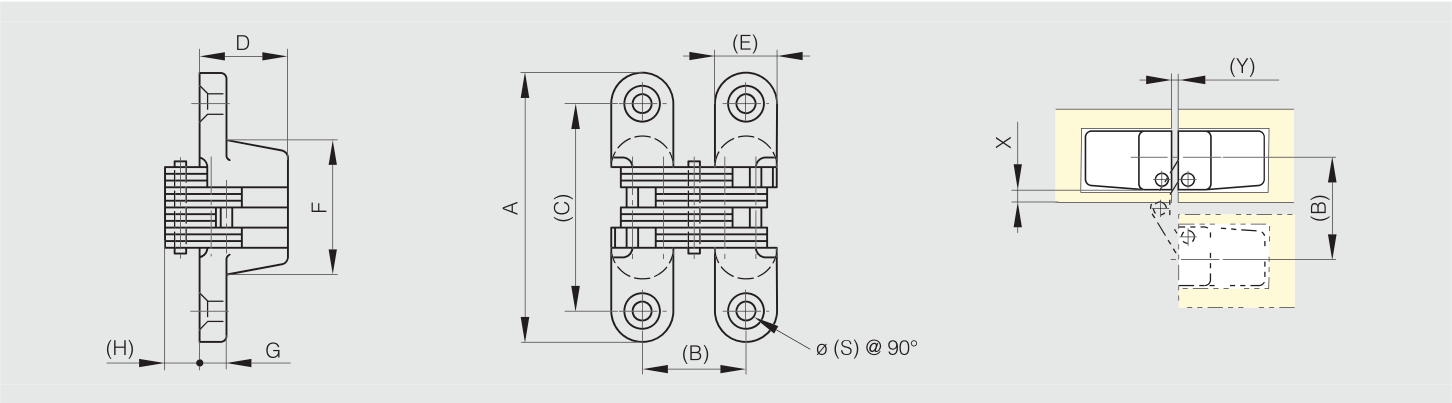

Concealed hinges for nested doors only

3-way adjustable concealed hinge

NEW

180° ZAMAK RoHS

3-way adjustment function allows vertical, horizontal and depth adjustment after hinge installation.
Can be split into two parts (one for the frame and one for the door) making installation easy.
Horizontal adjustment: ±1.5 mm
Vertical adjustment: ±1.5 mm
Depth adjustment: ±1 mm
Door thickness: min. 23 mm
4 screws included.

	Part number	Material	Finish	A	B	C	Weight (g)
NEW	70-7-3660	zinc die cast	silver	90	18	16	195

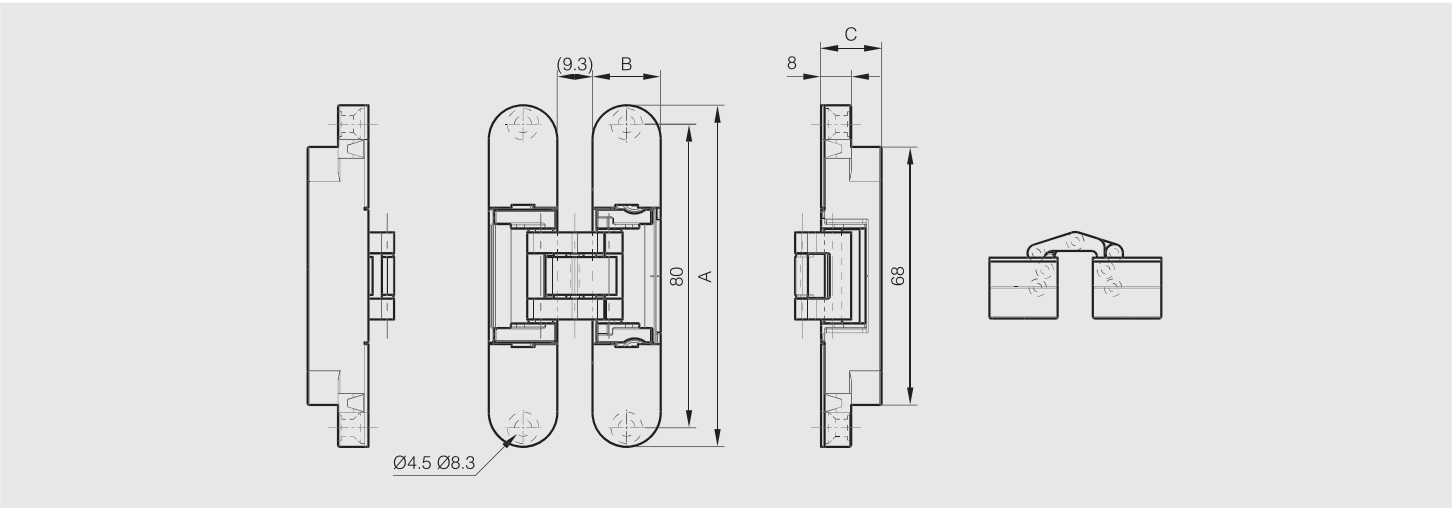

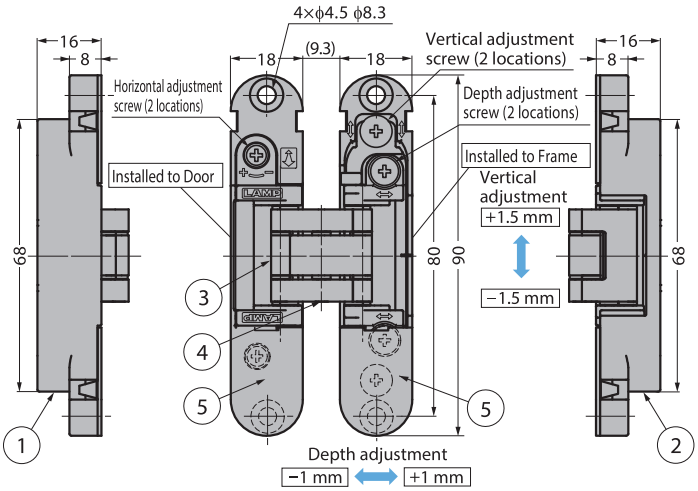

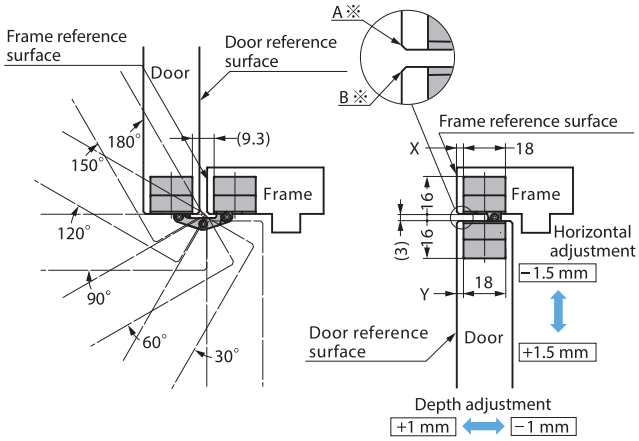

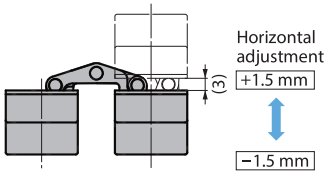

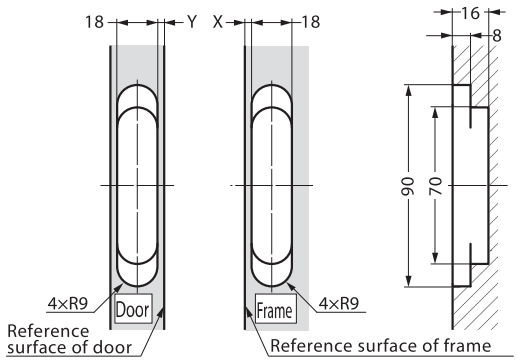

Concealed hinge with friction - 180° opening

180° ZAMAK RoHS

180° opening angle.
Free stop for safety. Maximum friction torque of 5 N.m for one hinge (when lid is closed).
Torque decreases as the opening angle increases, making easier to open the lid.

Part number	Material	Finish	A	B	C	S	Weight (g)
70-7-3635	zinc die-cast	satin chrome	70	31.6	53	4.6	208

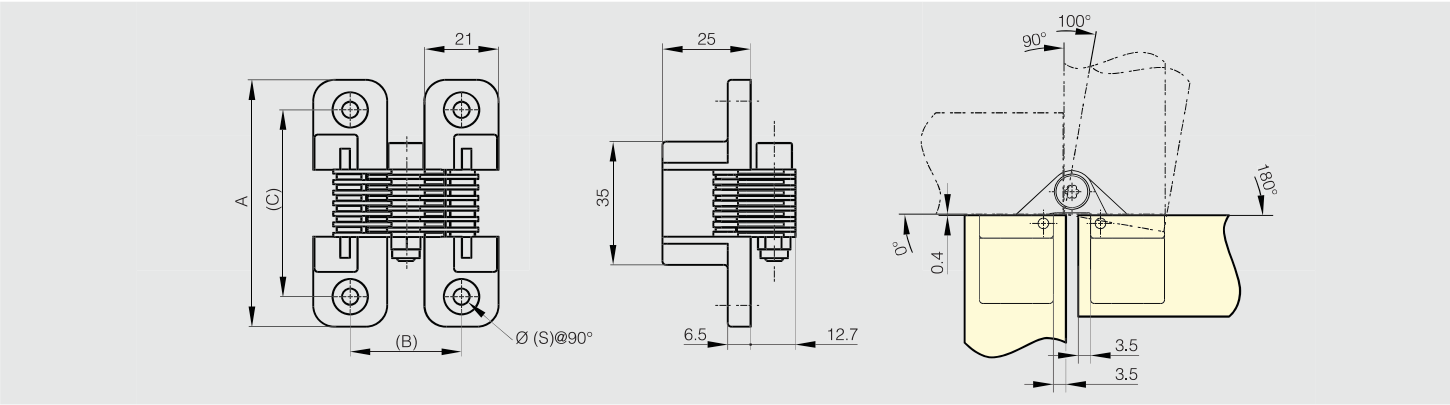

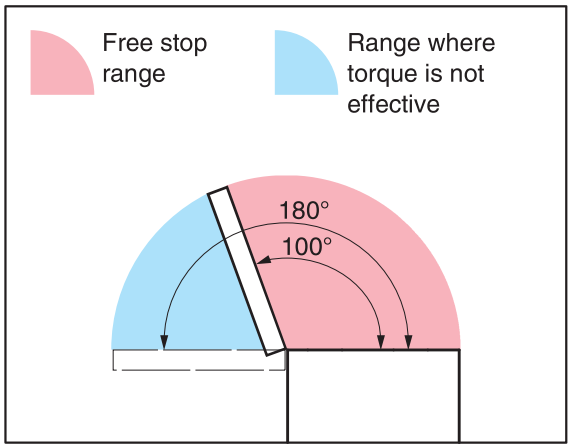

Install stopper to hold the door within the range where torque is not effective.

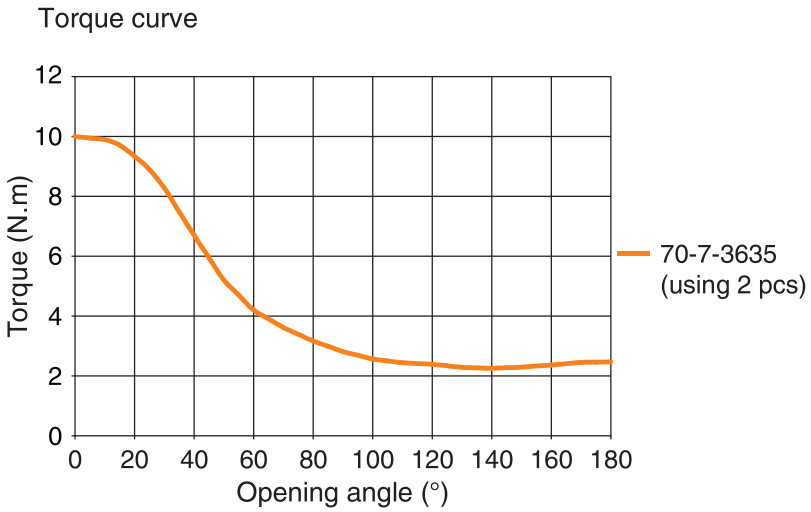

Concealed hinge with removable pin - 180° opening

Patented concealed hinge for metallic enclosures with a 180° opening.
Removable pin makes disassembly of doors easy.
Door thickness max: 1 mm.

Part number	Material	Finish	A	Weight (g)
73-1-3504	steel	raw	100	123

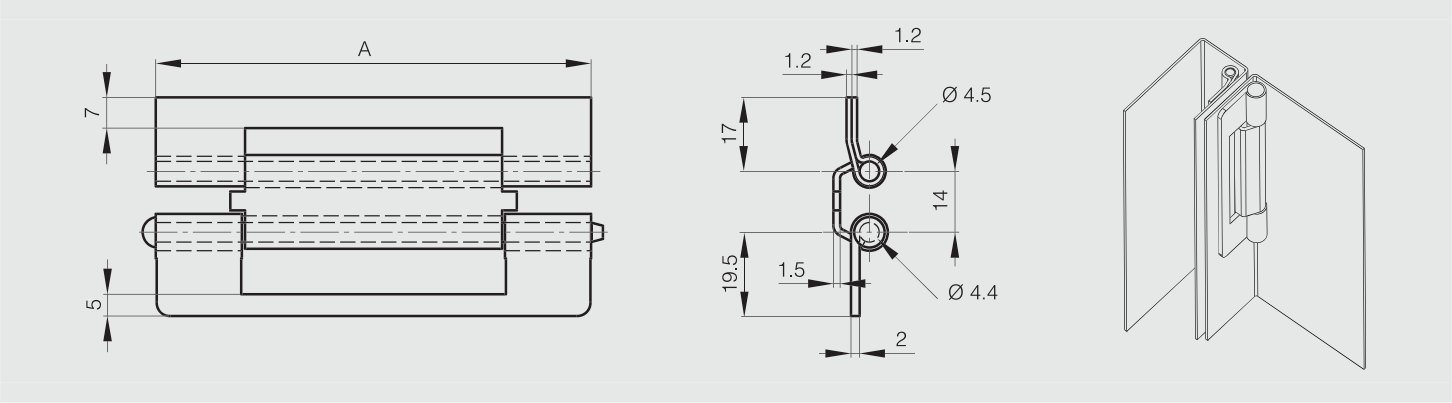

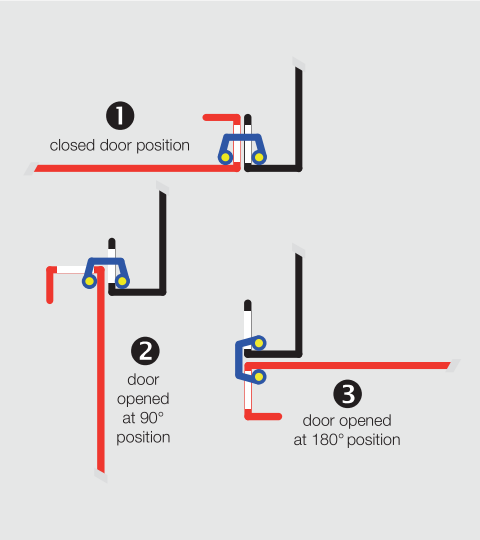

Operating of the 180° concealed hinge

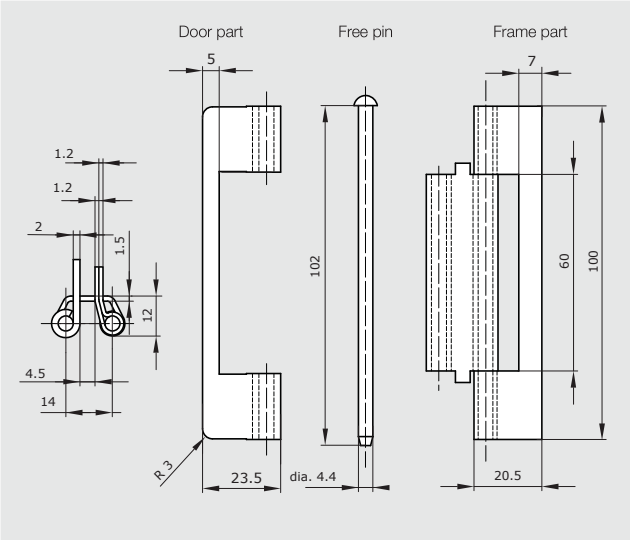

Dimensions of the 180° concealed hinge

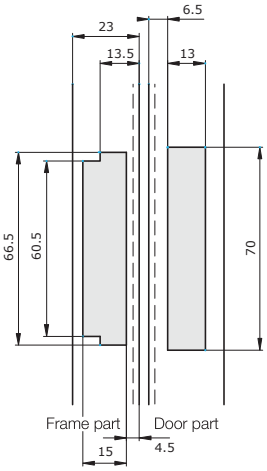

Cut-out to be made for hinge fitting

Long concealed spring hinges - 180 ° opening

NEW

180° STAINLESS STEEL STEEL RoHS

Patented concealed hinge 180° opening with double axis for sheet metal applications.
The springs make it possible to prioritize the 2 axis in order to have an adapted door movement.

Stainless steel pins and springs.

	Part number	Material	Finish	A	B	C	D	E	F	G	H	K	L	S	Weight (g)
NEW	40-1-4843	steel	zinc plated	500	90	3	6	30	71.4	60	49	68	10	6.6	3300
NEW	42-1-4612	304 stainless steel	raw	500	90	3	6	30	71.4	60	49	68	10	6.6	3300

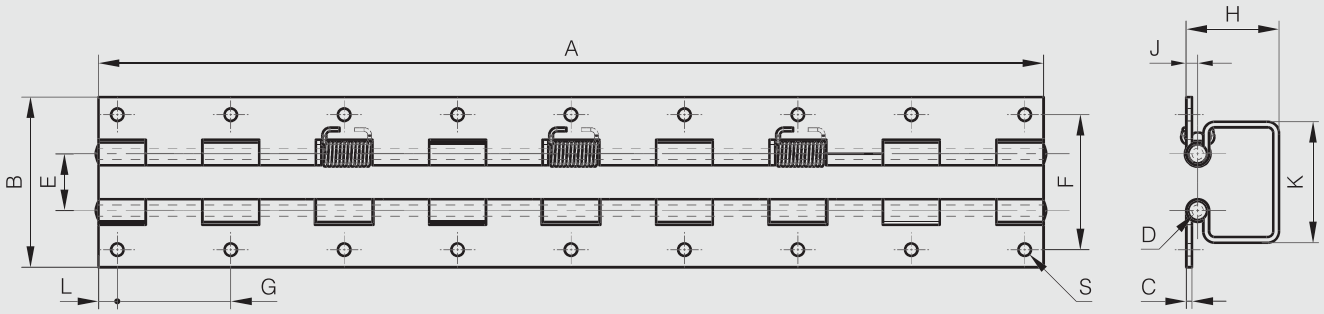

Concealed heavy duty hinge for flush doors - 90° opening

90° STAINLESS STEEL STEEL RoHS

Concealed hinge for LH or RH application. The 2 main hinge parts have a central guide to prevent door from sagging during adjustement.

Part number	Material	Finish	A	B	C	D	Weight (g)
85-7-1321	steel	raw / zinc plated	60	48	3	6	189
85-7-2331	304 stainless steel	raw	60	48	3	6	189

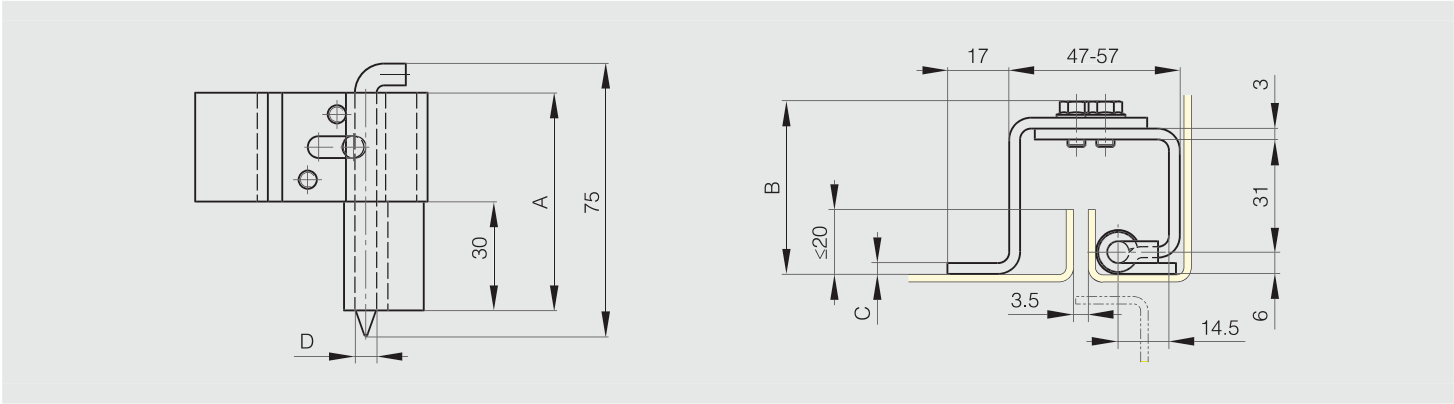

Concealed heavy duty hinge for flush doors - 90° opening

90° STAINLESS STEEL STEEL RoHS

Concealed hinge for LH or RH application. The 2 main hinge parts have a central guide to prevent door from sagging during adjustement.

Part number	Material	Finish	A	B	C	D	Weight (g)
85-7-1333	steel	raw / zinc plated	80	62	4	8	430
85-7-2334	304 stainless steel	raw	80	62	4	8	427

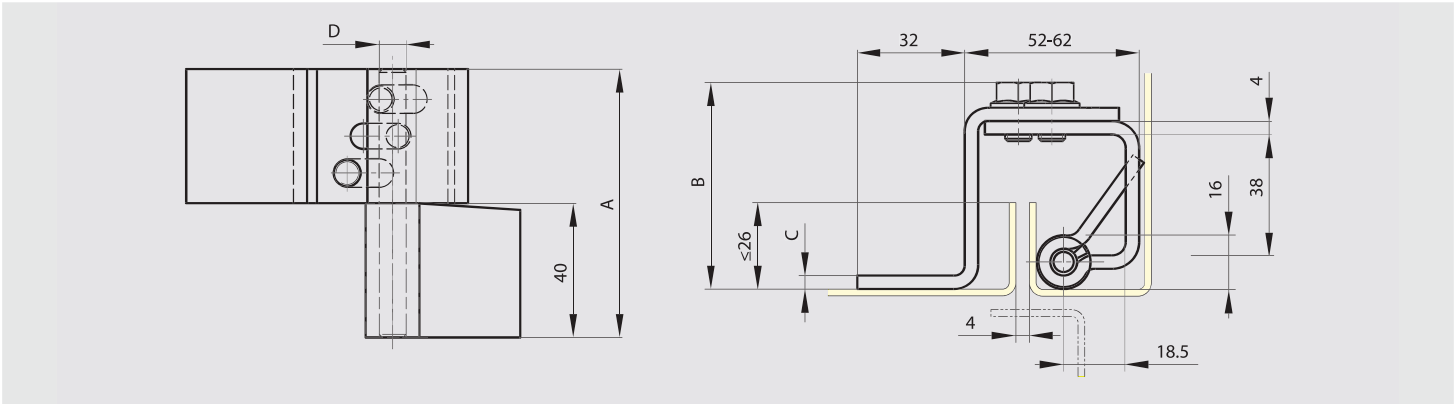

Concealed heavy duty hinge for flush doors - 90° opening

90° STAINLESS STEEL STEEL RoHS

Concealed hinge for LH or RH application. The 2 main hinge parts have a central guide to prevent door from sagging during adjustement.

Part number	Material	Finish	A	B	C	D	Weight (g)
85-7-1331	steel	raw / zinc plated	80	61	4	8	412
85-7-2332	304 stainless steel	raw	80	61	4	8	412

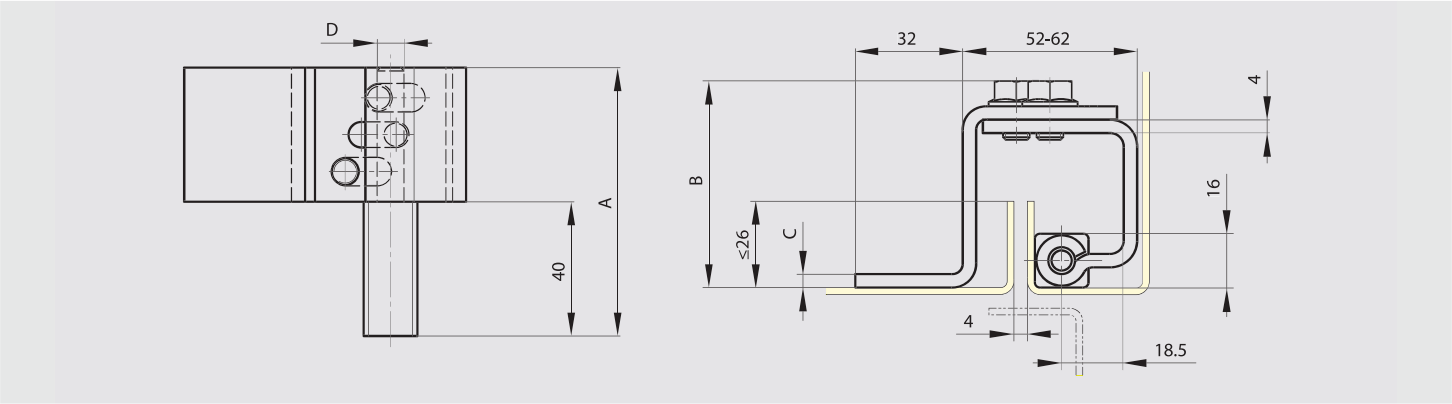

Concealed weld-on springloaded pin hinge

110° STEEL RoHS

Part number	Material	Finish	A	B	K	Weight (g)
85-7-1030	steel	raw	53	15	15	70

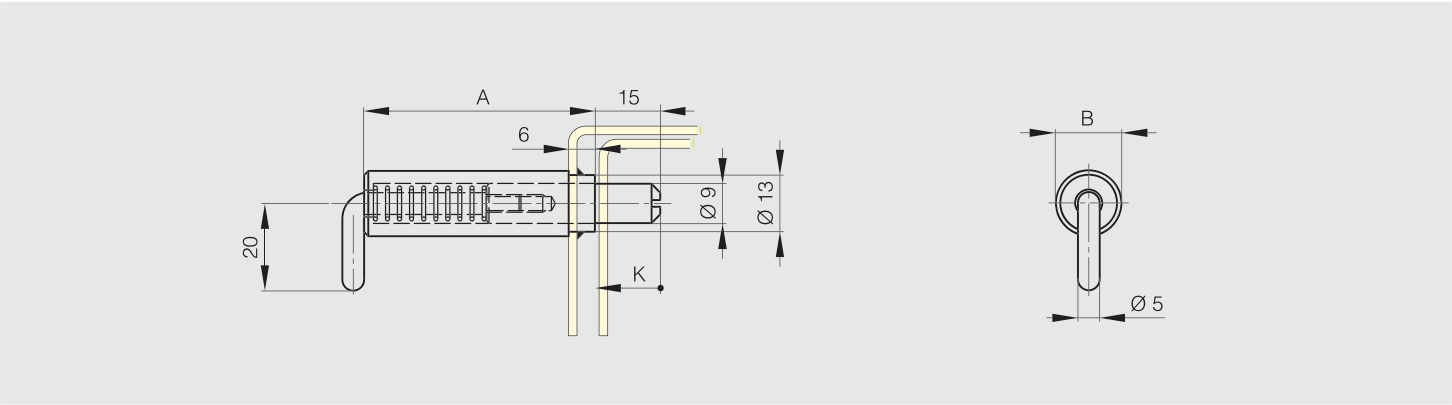

Concealed hinges for nested doors only

Concealed springloaded pin hinges A

STAINLESS STEEL STEEL RoHS

Stainless steel spring.
Hinges in raw steel and zinc plated steel with a zinc plated pin.
304 stainless steel pin for hinges in stainless steel.
Circlip in 1.4122 stainless steel.

Part number	Material	Finish	A	B	C	D	K	Note	Weight (g)
12-1-3856	steel	raw	82	18.2	2.8	6	12	type 2	46
12-1-3857	steel	raw	82	18.2	2.8	6	12	type 1	46
12-1-3854	steel	zinc plated	82	18.2	2.8	6	12	type 2	46
12-1-3855	steel	zinc plated	82	18.2	2.8	6	12	type 1	46
12-1-3858	304 stainless steel	raw	82	18.2	2.8	6	12	type 2	46
12-1-3859	304 stainless steel	raw	82	18.2	2.8	6	12	type 1	46

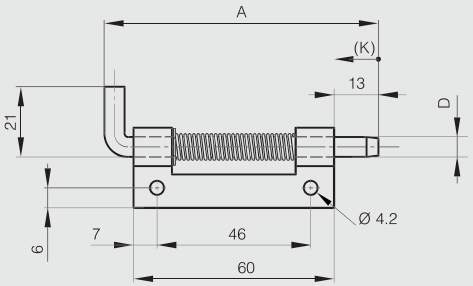

12-1-3857 & 12-1-3855 & 12-1-3859

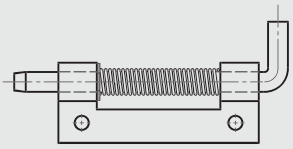

12-1-3856 & 12-1-3854 & 12-1-3858

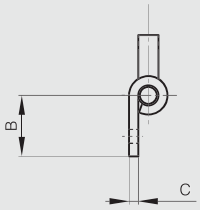

Concealed springloaded pin hinges B

STAINLESS STEEL STEEL RoHS

Stainless steel spring.
Zinc plated pin for hinges in raw steel and zinc plated steel.
304 stainless steel pin for hinges in stainless steel.
Circlip in 1.4122 stainless steel.

Part number	Material	Finish	A	B	C	D	K	Note	Weight (g)
12-1-3950	steel	raw	82	21	14	5	12	type 2	39
12-1-3951	steel	raw	82	21	14	5	12	type 1	39
12-1-3860	steel	zinc plated	82	21	14	5	12	type 2	39
12-1-3861	steel	zinc plated	82	21	14	5	12	type 1	39
12-1-3862	304 stainless steel	raw	82	21	14	5	12	type 2	39
12-1-3863	304 stainless steel	raw	82	21	14	5	12	type 1	39

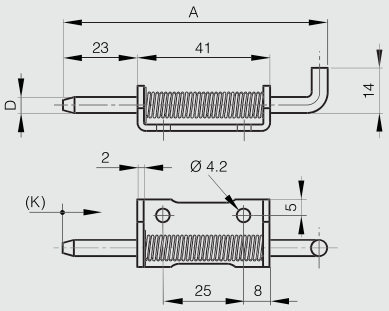

12-1-3951 & 12-1-3861 & 12-1-3863

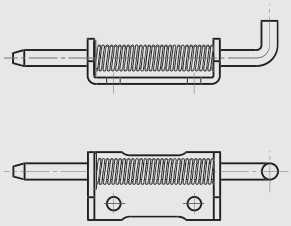

12-1-3950 & 12-1-3860 & 12-1-3862

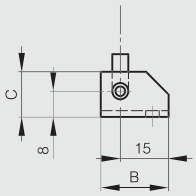

Concealed hinge A - 90° opening

NEW

90° STAINLESS STEEL STEEL RoHS

Main features:
- For nested doors or surface mounted doors.
- For horizontal applications mainly.
- 90° opening max.

Same installation as «Concealed hinge C - 90° opening».
Door thickness max. 20mm.
Minimal gap of 0.5 to 1.5mm between door and frame.

	Part number	Material	Finish	A	B	Weight (g)
	70-1-3628	steel	zinc plated	30.2	126.5	83
NEW	70-1-3656	304 stainless steel	raw	30.2	126.5	83

Concealed hinge B - 90° opening

NEW

90° STAINLESS STEEL STEEL RoHS

Main features:
- For nested doors or surface mounted doors.
- For horizontal applications mainly.
- 90° opening max.

Same installation as «Concealed hinge C - 90° opening».
Door thickness max. 20mm.
Minimal gap of 0.5 to 1.5mm between door and frame.

	Part number	Material	Finish	A	B	Weight (g)
	70-1-3627	steel	zinc plated	30.2	126.5	83
NEW	70-1-3655	304 stainless steel	raw	30.2	126.5	83

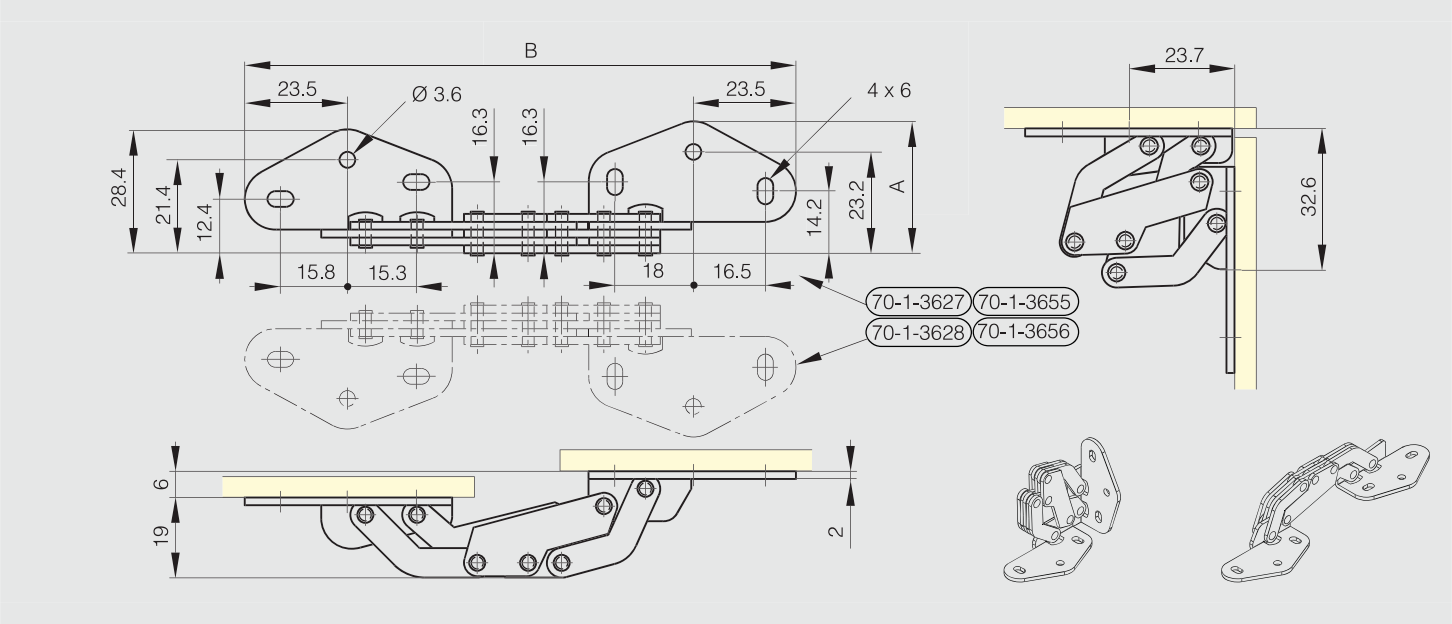

Concealed hinge C - 90° opening

NEW

90° STAINLESS STEEL STEEL RoHS

Main features:
- For nested doors or surface mounted doors.
- For horizontal applications mainly.
- 90° opening max.

Door thickness max. 20mm.
Minimal gap of 0.5 to 1.5mm between door and frame.

	Part number	Material	Finish	A	B	Weight (g)
	70-1-3626	steel	zinc plated	58.6	126.5	160
NEW	70-1-3654	304 stainless steel	raw	58.6	126.5	160

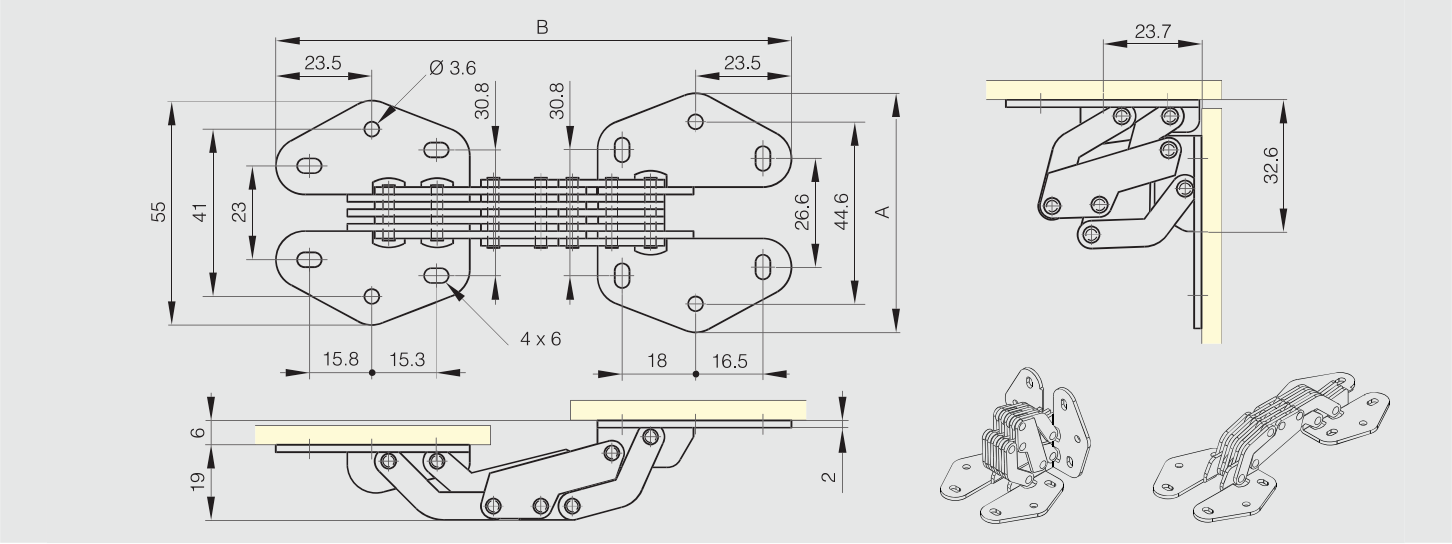

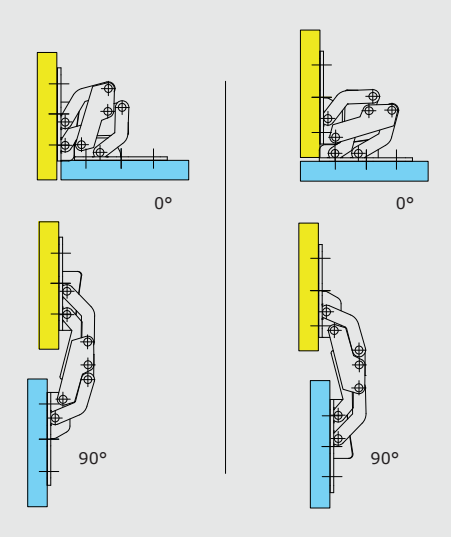

Nested door assembly shown

Surface mounted assembly shown

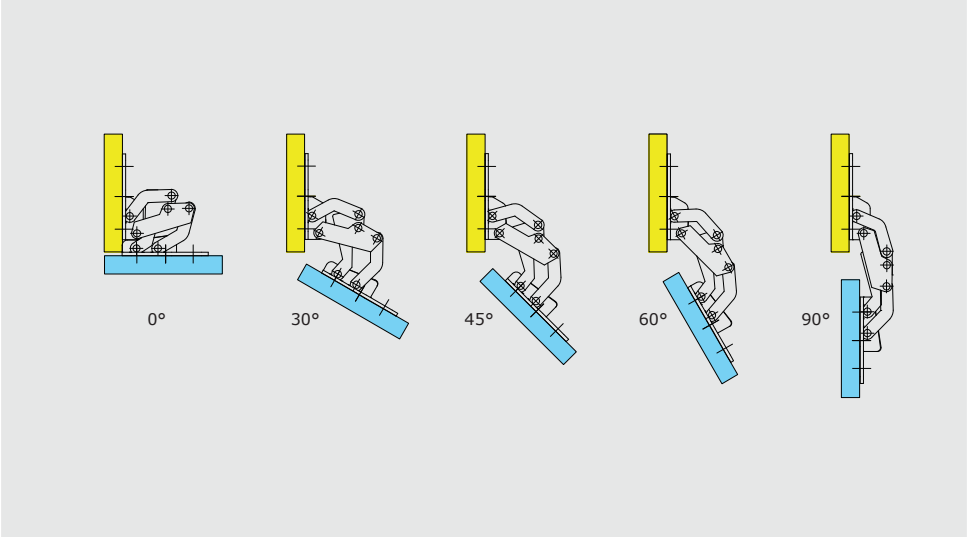

Surface mounted assembly shown

Heavy duty concealed hinge - opening 90°

NEW

90° ACIER RoHS

Heavy duty concealed hinge.
Hinge tested by pairs on a 15 kg vertical application, door 800mm x 600mm.
Cycle life: 10,000 cycles.

Main Features :
- For nested doors or surface mounted doors.
- High resistance to bending and twisting.
- For horizontal or vertical application.
- 90 °opening max.

Door thickness max 20 mm.
Minimal gap of 0.5 to 1.5 mm between frame and door.

	Part number	Material	Finish	A	B	C	Weight (g)
NEW	70-1-3657	steel	zinc plated	101	173.4	74.3	67

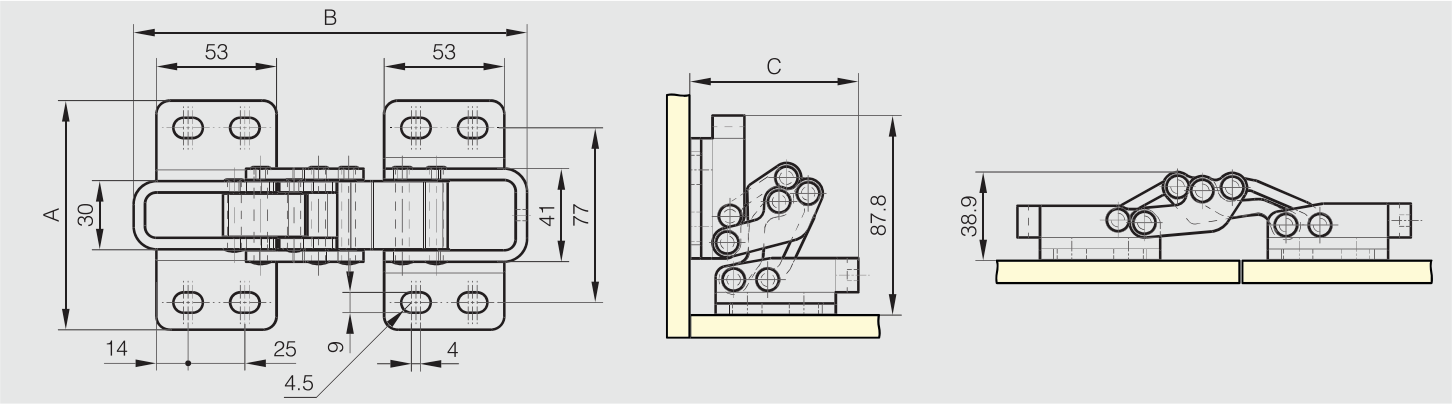

Concealed hinges - 90° opening

90° STAINLESS STEEL STEEL RoHS

Pins and links in 430 stainless steel for 70-1-3520.
Pins and links in 316L stainless steel for 70-1-3625.
Mounting features:
- For nested doors or surface mounted doors.
- LH or RH options.
- For horizontal or vertical applications.

Part number	Material	Finish	A	B	C	Weight (g)
70-1-3520	steel	zinc plated	44	29	32	67
70-1-3625	316L stainless steel	raw	44	29	32	65

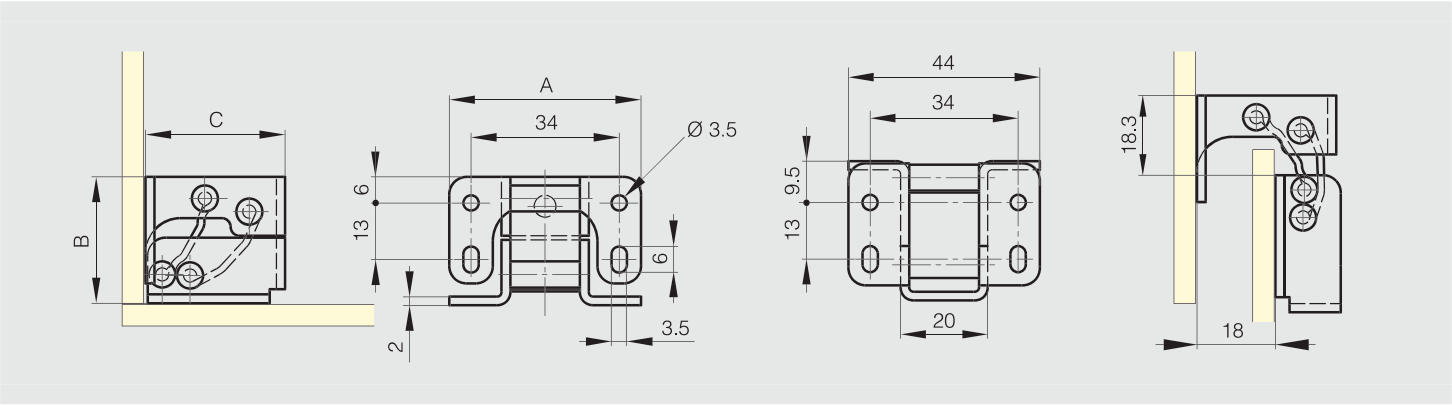

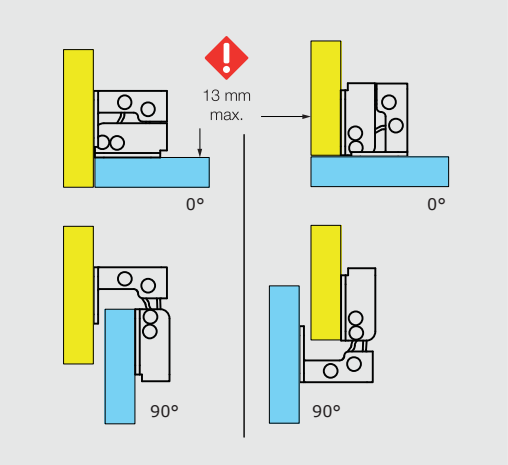

Nested door assembly shown

Surface mounted assembly shown

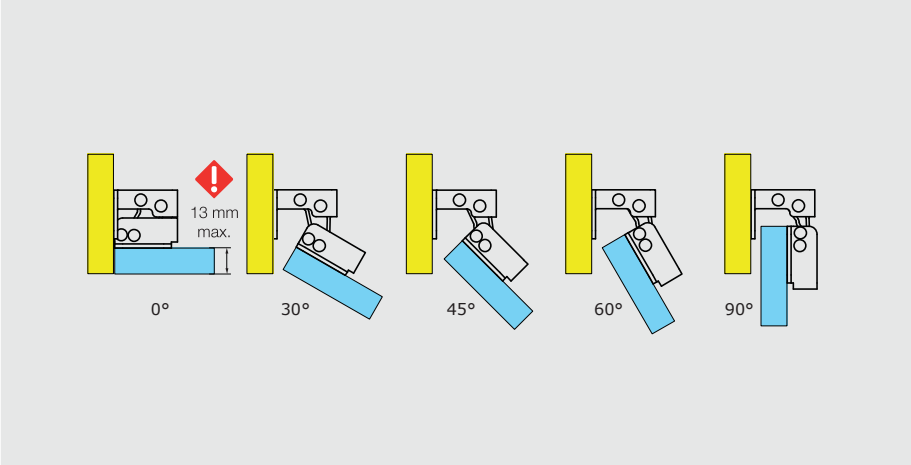

Nested door assembly shown

Concealed hinges - 125° opening

120° STAINLESS STEEL STEEL RoHS

Links in aluminium.
Pins in 430 stainless steel for 70-1-3639.
Pins in 304 Cu stainless steel for 70-1-3640.
Mounting features:
- For nested doors or surface mounted doors.
- LH or RH options.
- For horizontal or vertical applications.

Opening angle differs according to door thickness:
- 2 mm thickness: opening angle of 125°.
- 8 mm thickness: opening angle of 110°.
- 13 mm thickness: opening angle of 100°.

Please ask us for bespoke solutions.
Produced mainly in stainless steel, for a complete description of the materials contact us.

Part number	Material	Finish	A	B	C	Weight (g)
70-1-3639	steel	zinc plated	44	29	32	60
70-1-3640	316L stainless steel	raw	44	29	32	60

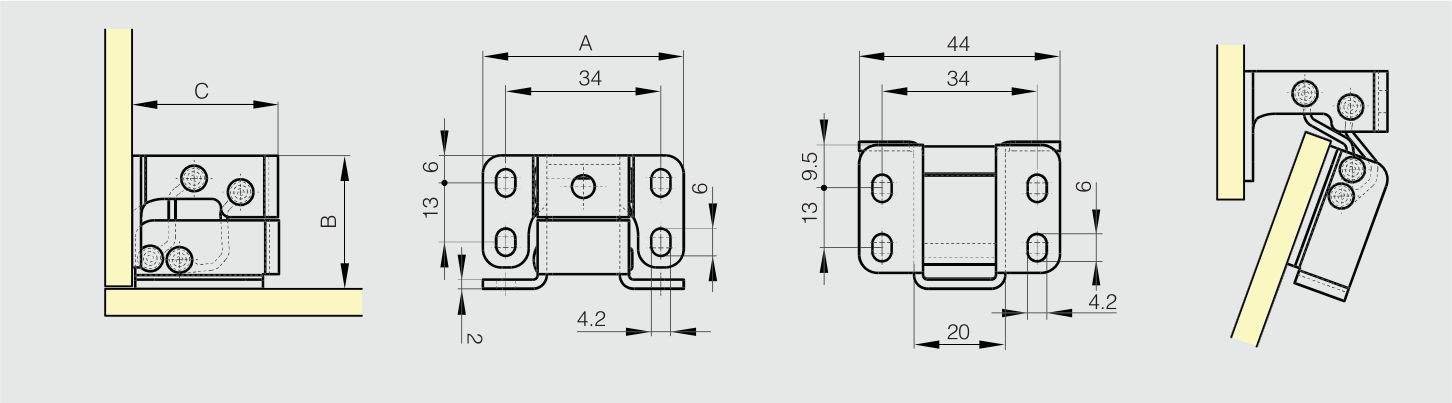

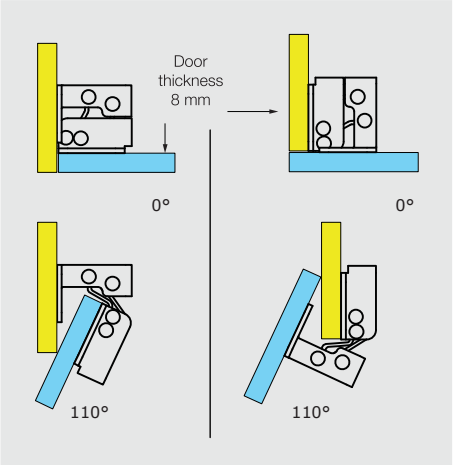

Nested door assembly shown

Surface mounted assembly shown

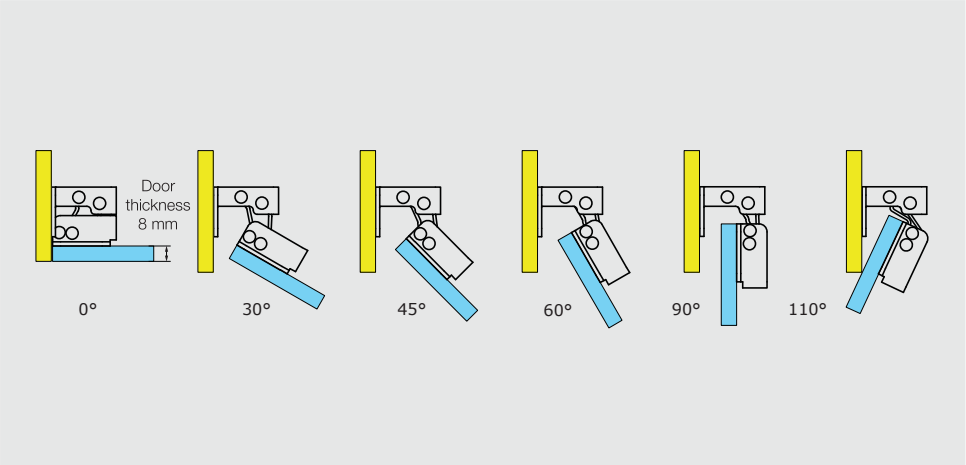

Nested door assembly shown

Concealed hinges (size M) - 125° opening

NEW

120° STAINLESS STEEL STEEL RoHS

Links in aluminium.
Pins in zinc plated steel for 70-1-3647.
Pins in 304 Cu stainless steel for 70-1-3648.

Mounting features:
- For nested doors or surface mounted doors.
- LH or RH options.
- For horizontal or vertical applications.

Opening angle differs according to door thickness:
- For thickness up to 10 mm: opening angle of 125°.
- 15 mm thickness: opening angle of 115°.
- 20 mm thickness: opening angle of 108°.

Please ask us for bespoke solutions.

	Part number	Material	Finish	A	B	C	Weight (g)
NEW	70-1-3647	steel	zinc plated	77	55.2	54	250
NEW	70-1-3648	316L stainless steel	raw	77	55.2	54	250

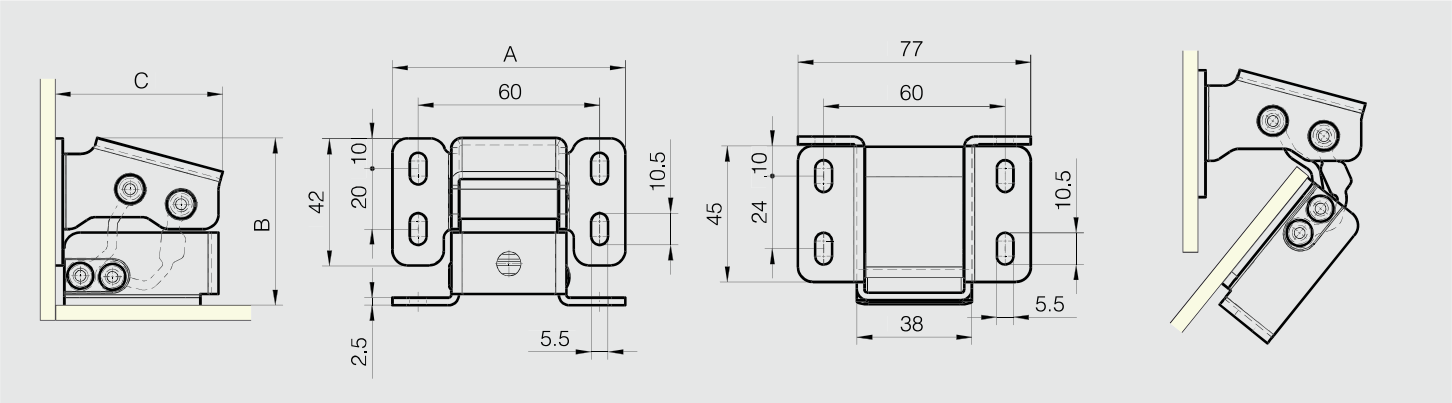

Concealed hinge - 110° opening

110° STEEL RoHS

Heavy duty concealed hinge.
Tested to 10,000 cycles using 2 hinges with a door weight of 25 kg measuring 1 m x 1 m.
Links in anodised aluminium.

Part number	Material	Finish	A	B	C	Weight (g)
70-1-3557	steel	zinc plated	102	80.5	76	520

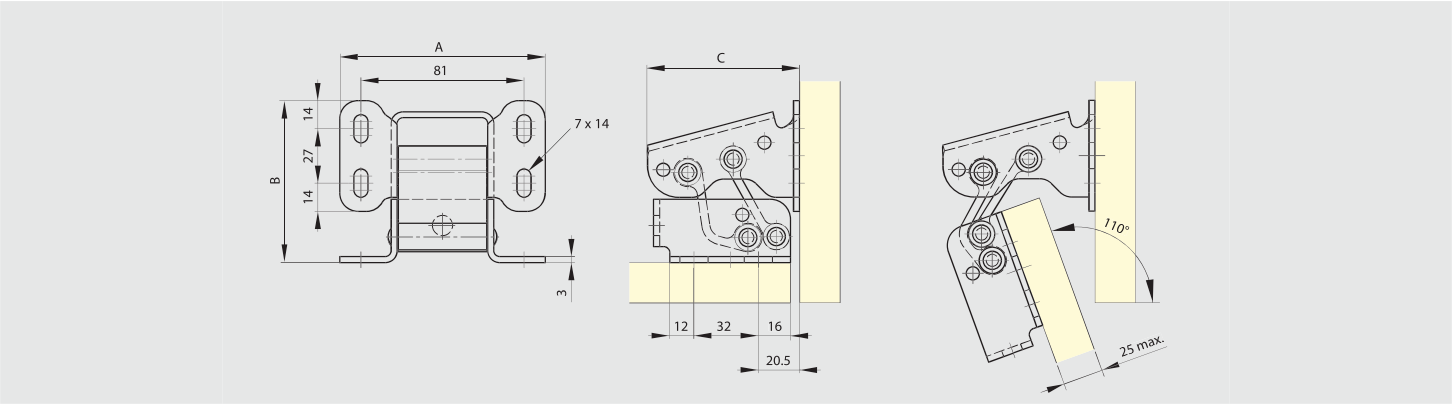

Spring loaded concealed hinge - 110° opening

110° STEEL RoHS

For horizontal applications only.
Fixing plates in polymer.

Part number	Material	Finish	A	B	C	Weight (g)
71-1-3611	steel	black zinc plated	60	162.4	71.4	132

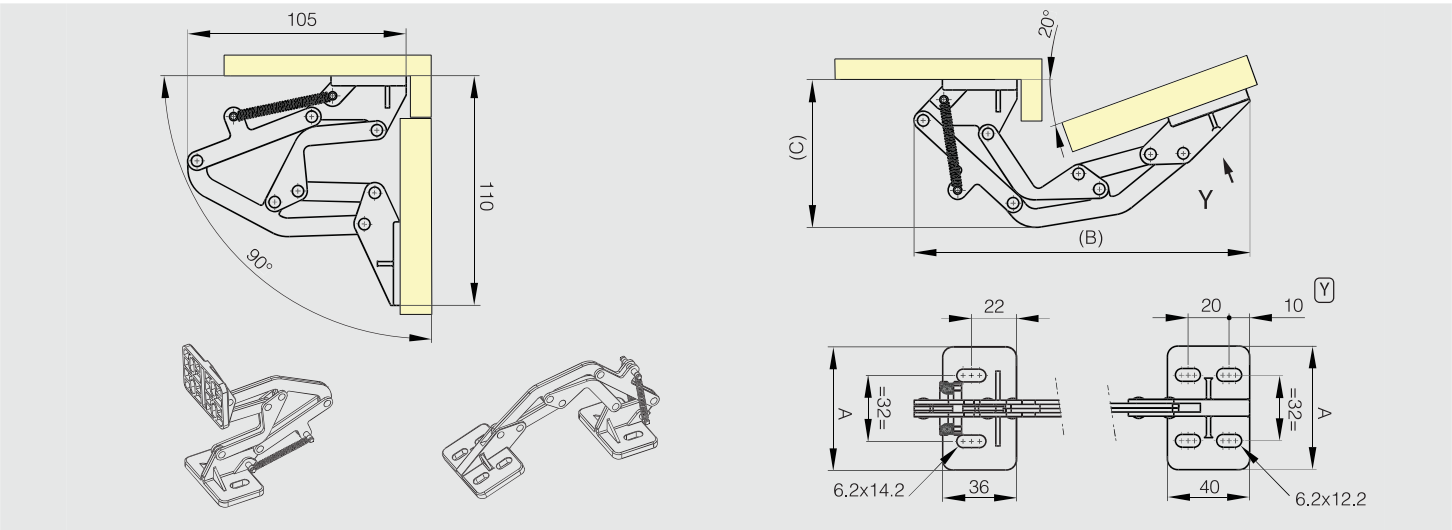

Concealed hinge - 7 axis - steel plates - 110° opening

NEW

110° STEEL RoHS

For horizontal applications only.
Fixing plates in steel.

	Part number	Material	Finish	A	B	C	Note	Weight (g)
NEW	70-1-3645	steel	zinc plated	50	166	74.7	without spring	208

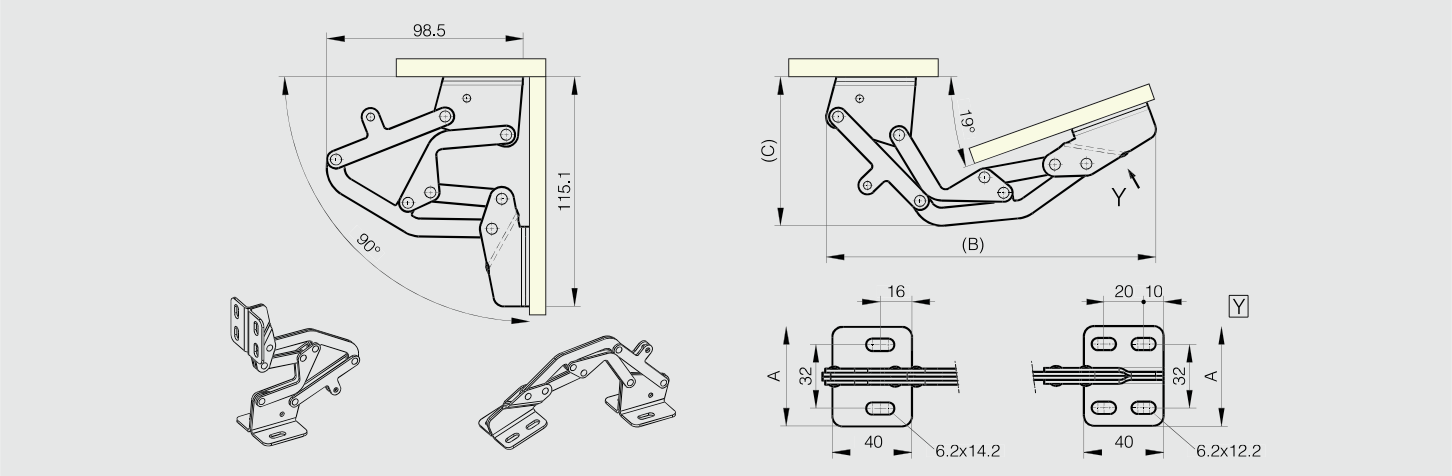

Spring loaded concealed hinge - 7 axis - steel plates - 110° opening

NEW

110° STEEL RoHS

For horizontal applications only.
Fixing plates in steel.
Opening spring force: 1 N.m / hinge
Closing spring force: 3 N.m / hinge

	Part number	Material	Finish	A	B	C	Note	Weight (g)
NEW	70-1-3646	steel	zinc plated	50	166	74.7	with spring	222

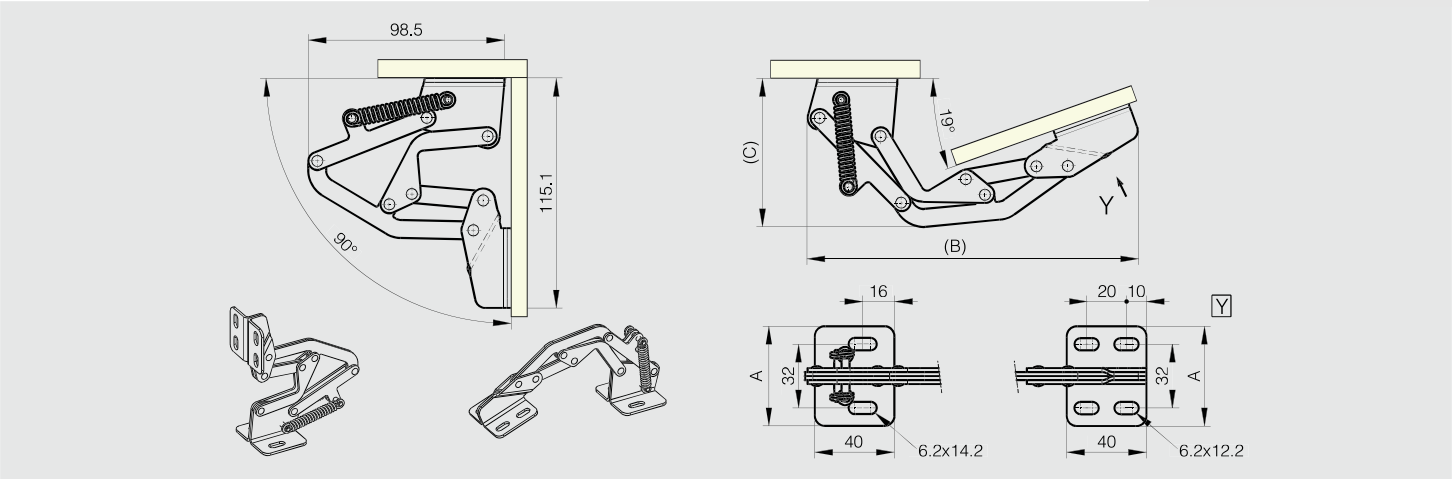

Spring loaded concealed hinges - 90° opening

90° STAINLESS STEEL STEEL RoHS

Produced mainly in stainless steel, for a complete description of the materials contact us.

Part number	Material	Finish	A	B	C	Weight (g)
70-1-9003	steel	nickel plated	44	104.5	26	70
70-1-9000	316 stainless steel	raw	44	104.5	26	70

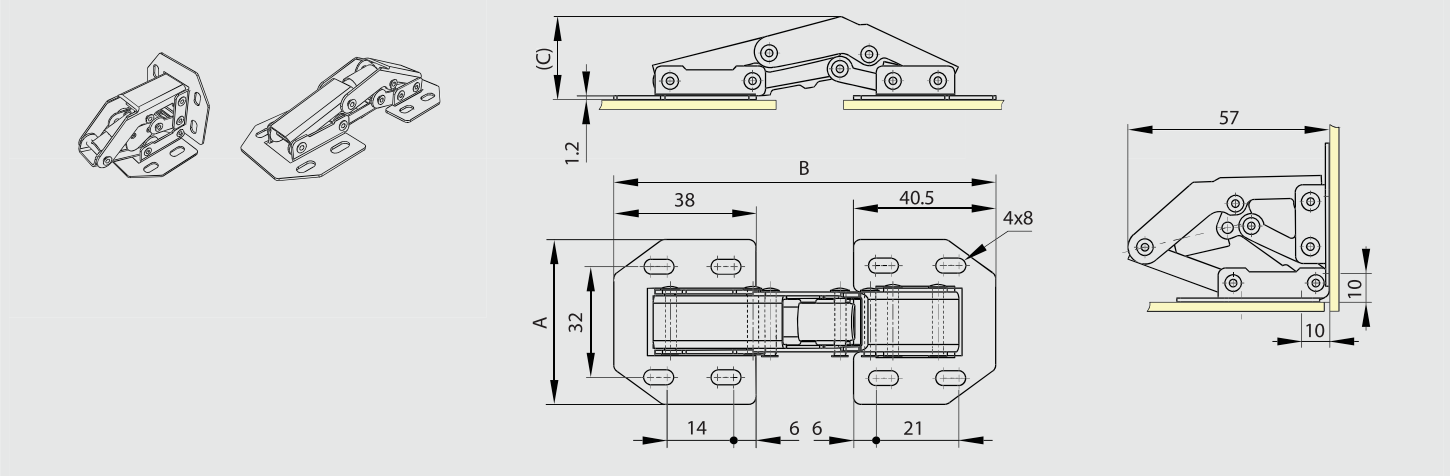

Spring loaded concealed hinges - 150° opening

150° STAINLESS STEEL STEEL RoHS

For door thickness max: 20 mm.
Produced mainly in stainless steel, for a complete description of the materials contact us.

Part number	Material	Finish	A	B	C	Weight (g)
70-1-9001	steel	nickel plated	52	121	73.5	140
70-1-9002	304 stainless steel	raw	52	121	73.5	140

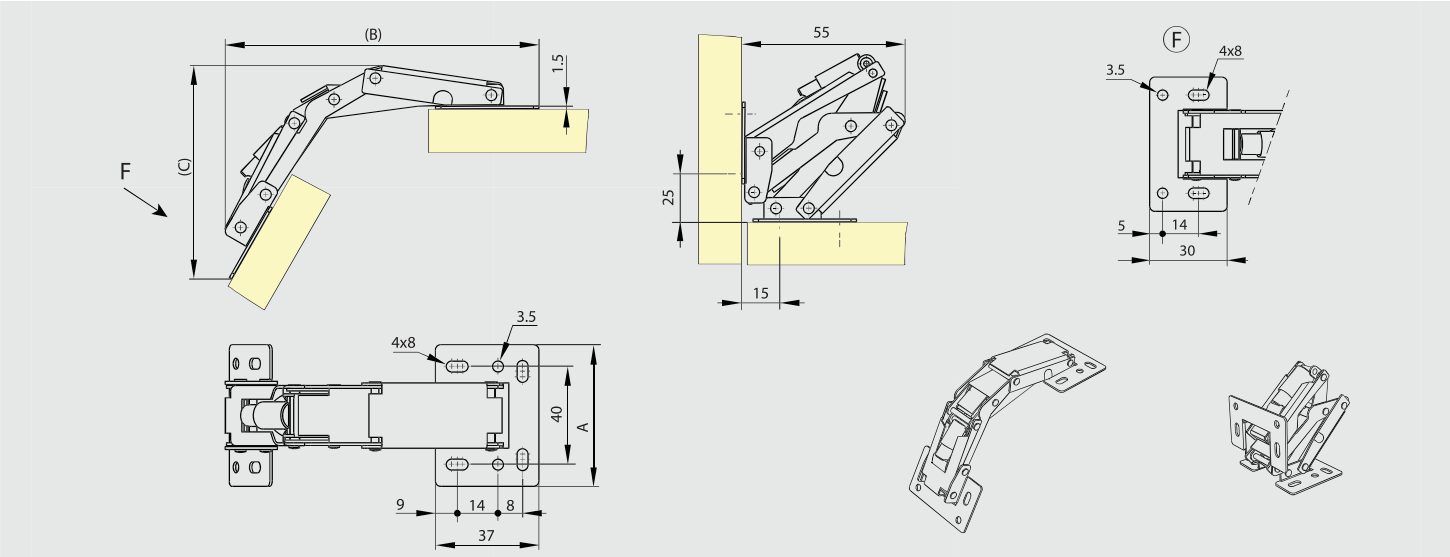

Concealed hinges with two cranked leaves - undrilled - 120° opening - version A

120° STAINLESS STEEL RoHS

Hinges for side door of baggage compartment (bus and coach, bodywork...)

Part number	Material	Finish	A	B	C	D	E	Weight (g)
39-1-3885	304 stainless steel	raw	300	44.1	1.5	3	12.5	440
39-1-3887	304 stainless steel	raw	600	44.1	1.5	3	12.5	880

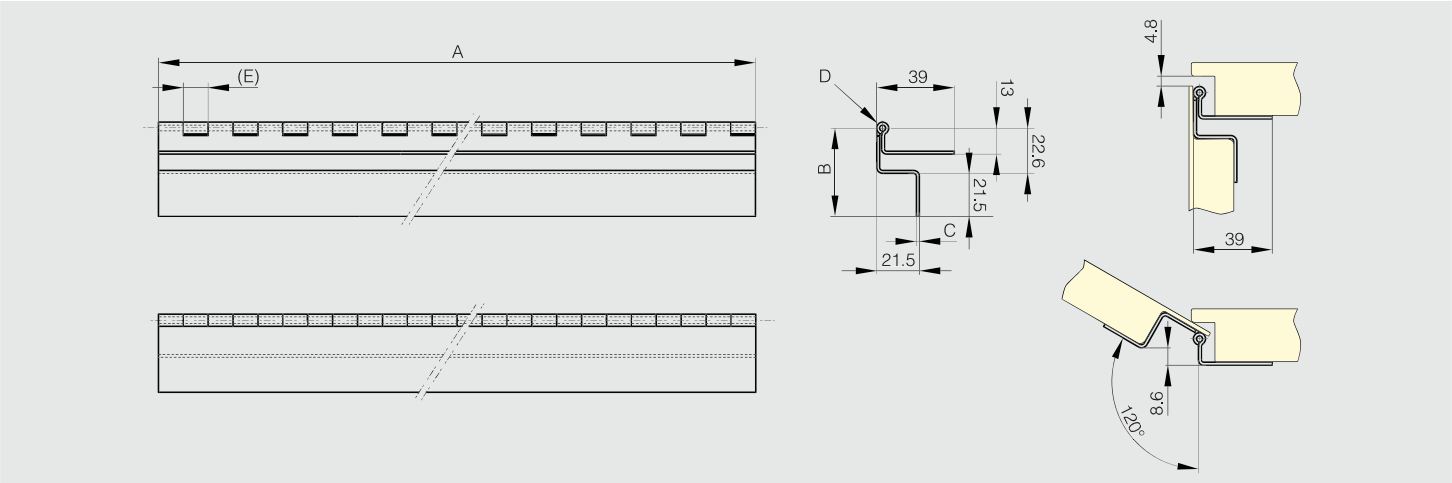

Concealed hinges with two cranked leaves - drilled - 120° opening - version A

120° STAINLESS STEEL RoHS

Hinges for side door of baggage compartment (bus and coach, bodywork...)
Use rivets for 4.2 diameter holes (door side).
Use self-drilling screws for 12.2 diameter holes (frame side).

Part number	Material	Finish	A	B	C	D	E	G	H	Weight (g)
39-1-3886	304 stainless steel	raw	300	44.1	1.5	3	12.5	160	70	430
39-1-3888	304 stainless steel	raw	600	44.1	1.5	3	12.5	160	60	870

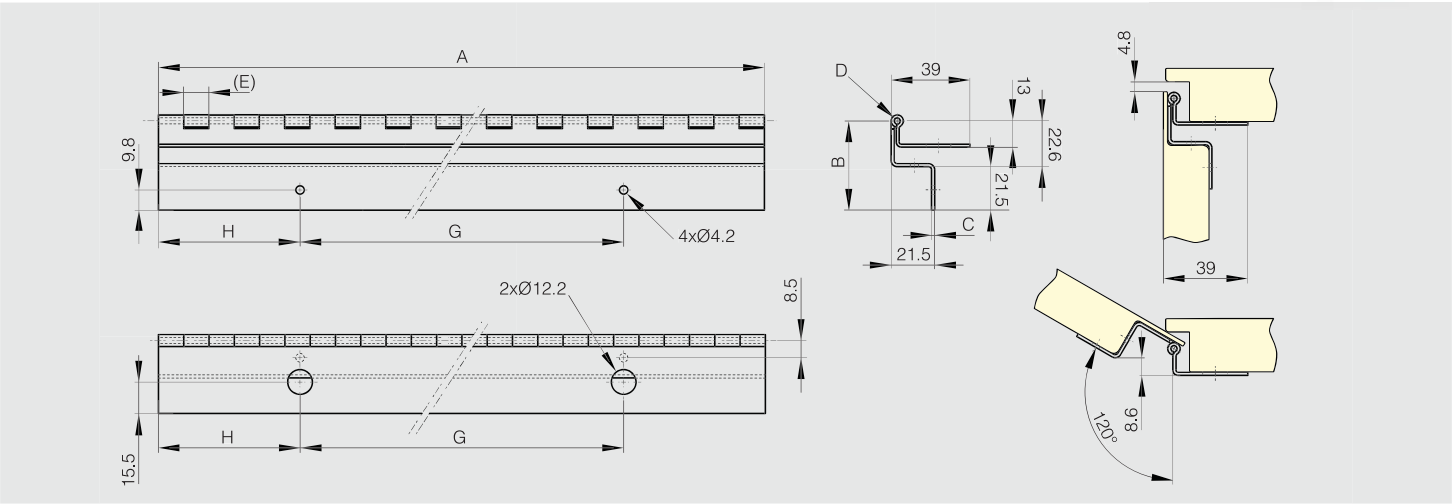

Concealed hinges with two cranked leaves - undrilled - 120° opening - version B

120° STAINLESS STEEL RoHS

Hinges for side door of baggage compartment (bus and coach, bodywork...)

Part number	Material	Finish	A	B	C	D	E	Weight (g)
39-1-3889	304 stainless steel	raw	300	54.1	1.5	3	12.5	430
39-1-3891	304 stainless steel	raw	600	54.1	1.5	3	12.5	870

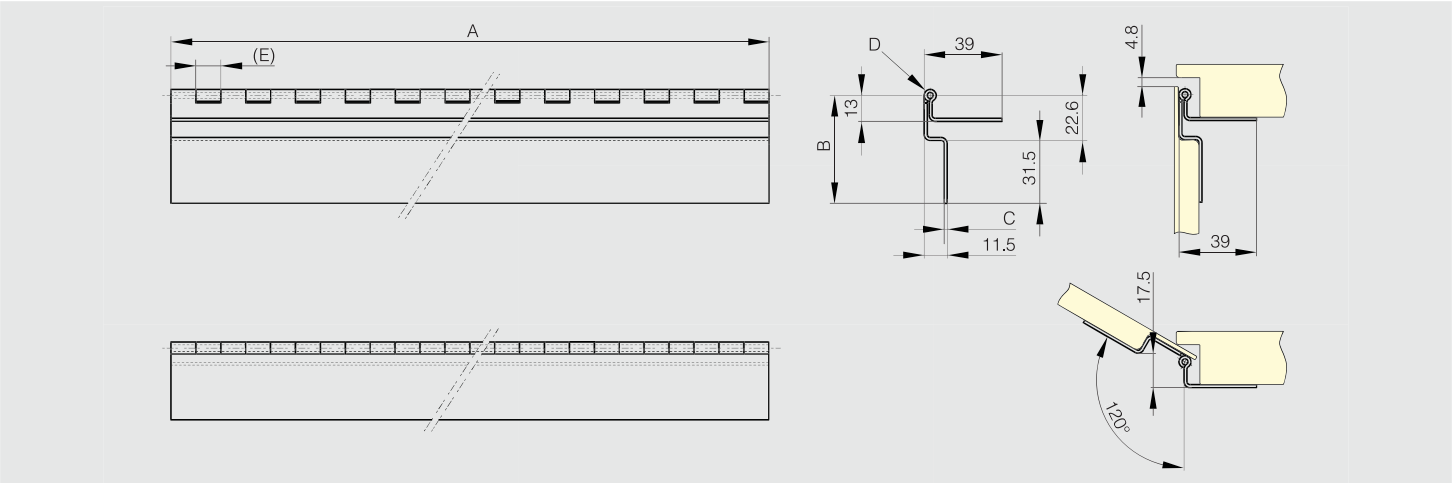

Concealed hinges with two cranked leaves - drilled - 120° opening - version B

120° STAINLESS STEEL RoHS

Hinges for side door of baggage compartment (bus and coach, bodywork...)
Use rivets for 4.2 diameter holes (door side).
Use self-drilling screws for 12.2 diameter holes (frame side).

Part number	Material	Finish	A	B	C	D	E	G	H	J	K	L	Weight (g)
39-1-3890	304 stainless steel	raw	300	54.1	1.5	3	12.5	160	30	80	70	160	430
39-1-3892	304 stainless steel	raw	600	54.1	1.5	3	12.5	260	40	130	60	160	870

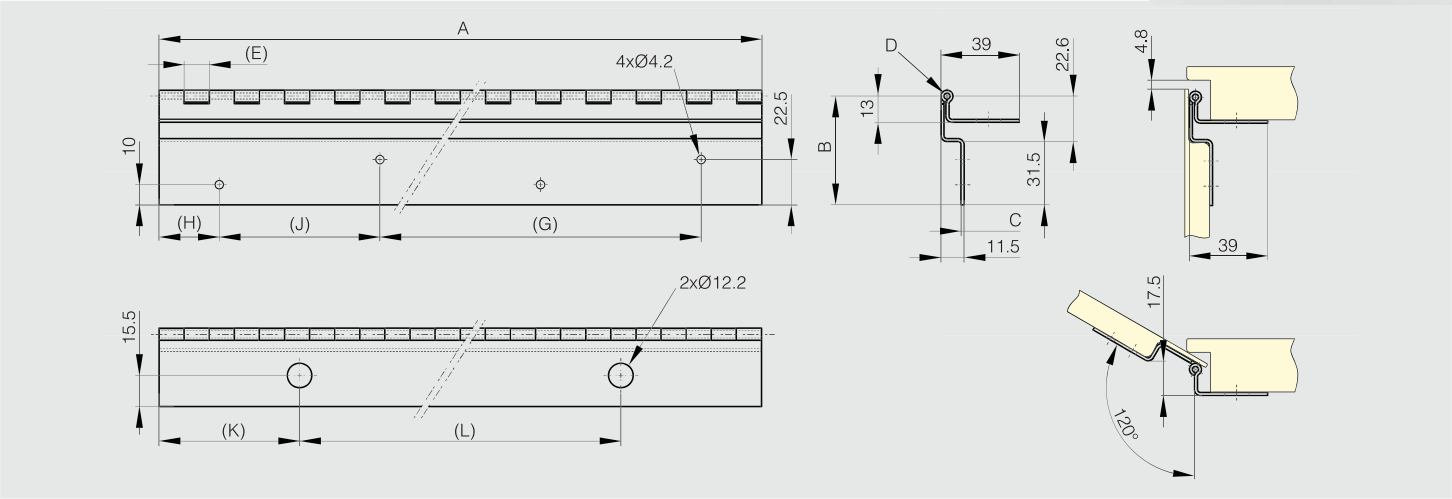

The way a spring hinge opens relates to the spring type

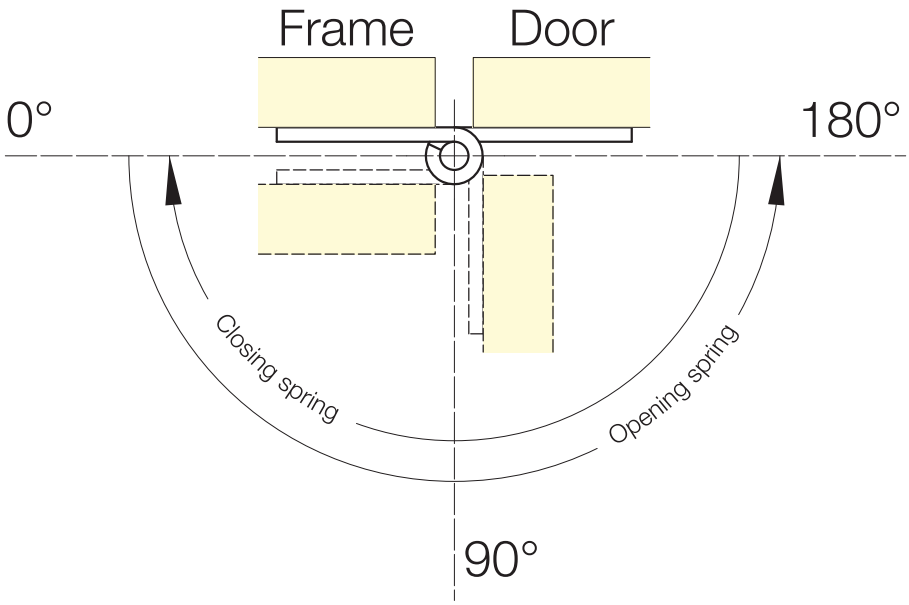

Angles of opening or closing

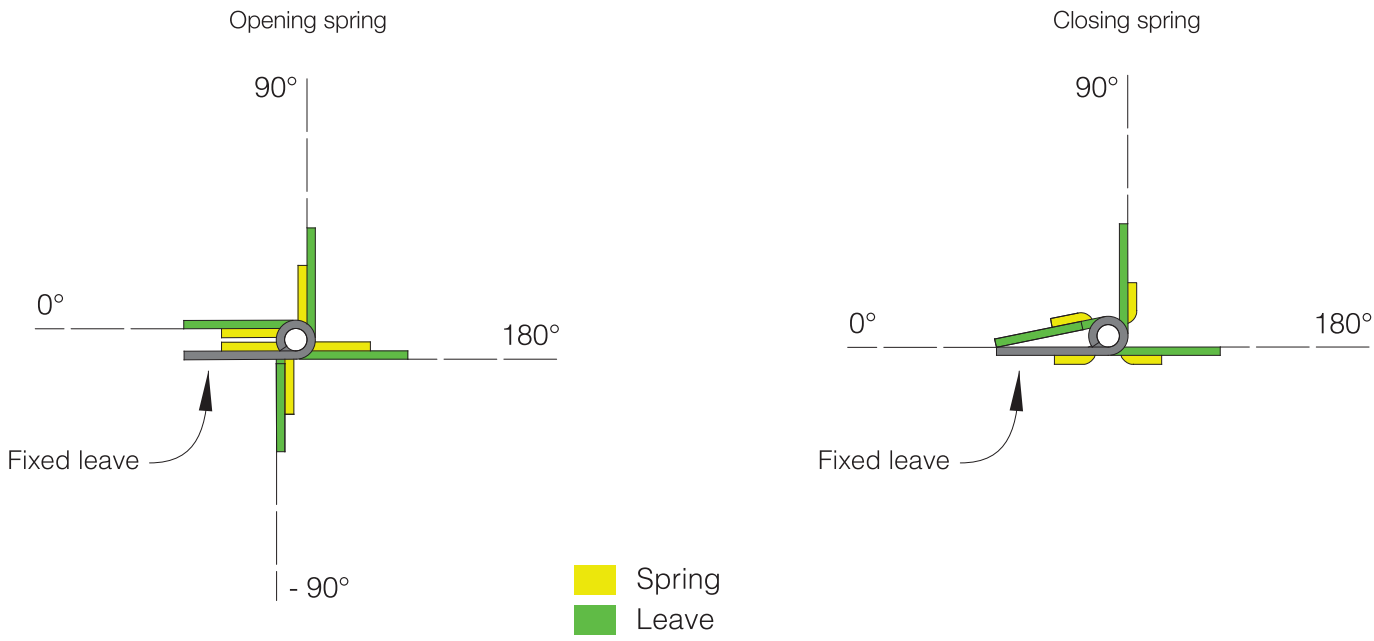

Definition of spring hinge torques

M: hinge torque at various positions
M(0°): torque when hinge leaves are parallel
M(90°): torque when leaves are at 90°
M(180°): torque when leaves are at 180°

Spring hinges delivered as shown

When delivered, hinges have the following position:

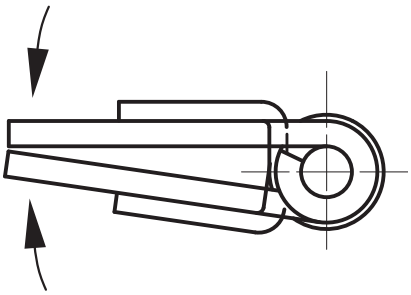

Hinge with closing spring

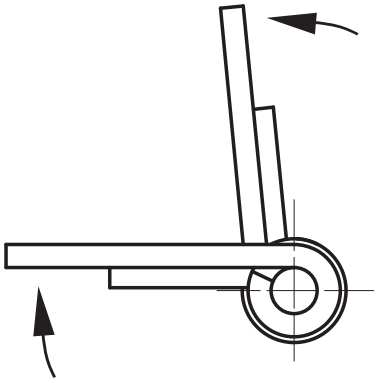

Hinge with opening spring

Mounting and opening direction

Concealed mounting	Surface mounting

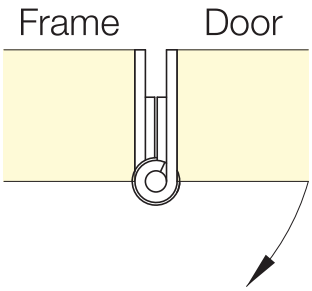

Hinge with **opening** spring

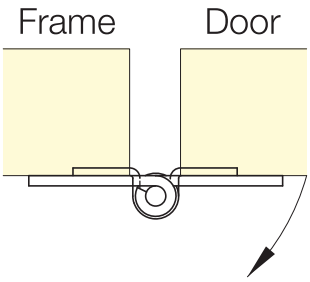

Hinge with **closing** spring

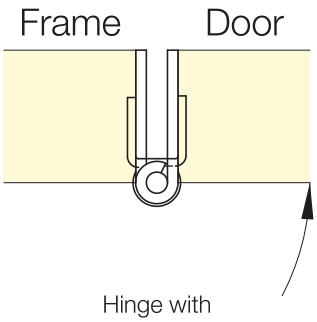

Hinge with **closing** spring

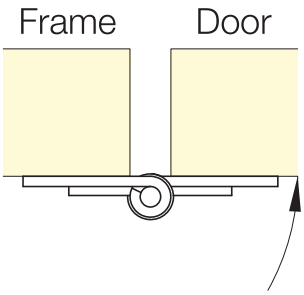

Hinge with **opening** spring

Arrows indicate rotation of hinge due to the effect of the spring

Polymer hinges with or without adjustable spring torque

NEW

180° POLYMER RoHS

Hinge with adjustable spring torque.

Opening spring force on delivery:
M(0°): 0.75 N.m / M(90°): 0.5 N.m / M(180°): 0.25 N.m
Recommended maximum torque for opening spring: 1.1 N.m at 60° (4 clicks).

Closing spring force on delivery:
M(0°): 0 N.m / M(90°): 0.25 N.m / M(180°): 0.5 N.m
Recommended maximum torque for closing spring: 1.1 N.m at 120° (6 clicks).

Material: 30% GF reinforced PA 6.
Spring in Bezinal steel.
Other components in POM.

Spring force adjusted with a T27 Torx key in option (part number 99-1-3729).
Adjustment instructions: scan the QR code.

	Part number	Material	Finish	A	B	C	D	Note	Weight (g)
NEW	54-1-3552	polymer	black	75	65	5	13	opening spring	45
NEW	54-1-3553	polymer	black	75	65	5	13	closing spring	45
NEW	54-1-3554	polymer	black	75	65	5	13	without spring	38

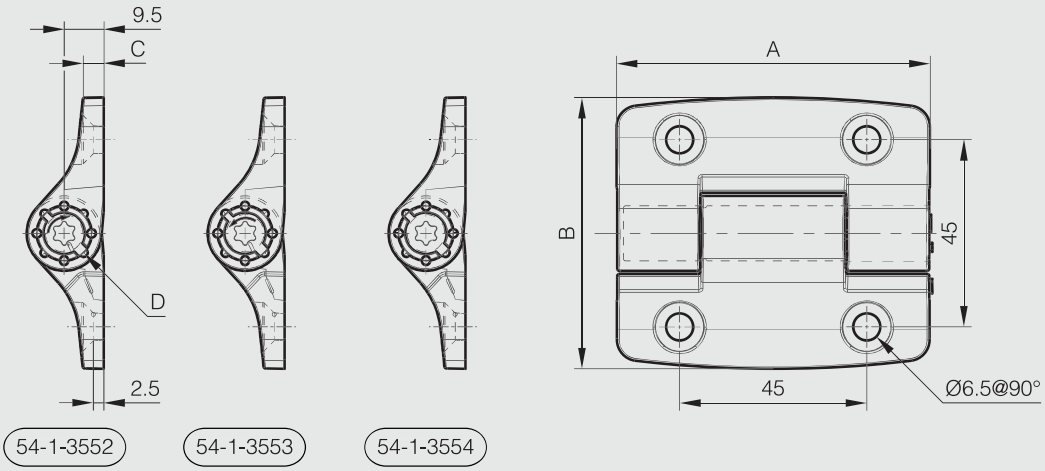

Instructions

opening spring

closing spring

Spring hinges - aluminium profile 0.20 N.m - diameter 8

NEW

180° ALU RoHS

Opening spring force:
M(0°): 0.23 N.m / M(90°): 0.15 N.m / M(180°): 0.08 N.m
Closing spring force:
M(0°): 0.08 N.m / M(90°): 0.15 N.m / M(180°): 0.23 N.m

2 other versions available: with friction or with detent mechanism.

	Part number	Material	Finish	A	B	C	D	Note	Weight (g)
	72-1-4256	6060 T5 alu	clear anodised	30	35	3.3	8	opening spring	10
	72-1-4257	6060 T5 alu	black anodised	30	35	3.3	8	opening spring	10
NS	72-1-4318	6060 T5 alu	clear anodised	30	35	3.3	8	opening spring / with M3 studs	13
NS	72-1-4319	6060 T5 alu	black anodised	30	35	3.3	8	opening spring / with M3 studs	13
	72-1-4275	6060 T5 alu	clear anodised	30	35	3.3	8	closing spring	10
	72-1-4276	6060 T5 alu	black anodised	30	35	3.3	8	closing spring	10
NS	72-1-4333	6060 T5 alu	clear anodised	30	35	3.3	8	closing spring / with M3 studs	13
NS	72-1-4334	6060 T5 alu	black anodised	30	35	3.3	8	closing spring / with M3 studs	13

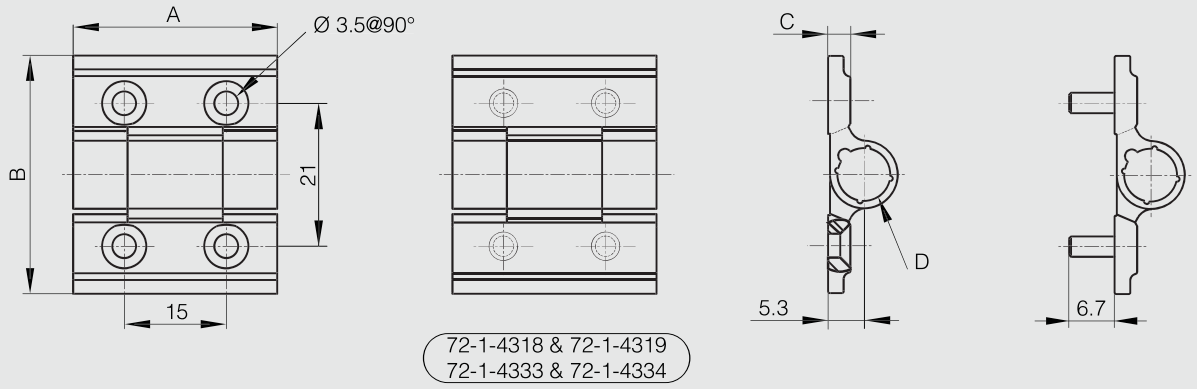

Spring hinges - aluminium profile 0.50 N.m - diameter 8

NEW

180° ALU RoHS

Opening spring force:
M(0°): 0.48 N.m / M(90°): 0.3 N.m / M(180°): 0.16 N.m

	Part number	Material	Finish	A	B	C	D	Note	Weight (g)
NEW	72-1-4309	6060 T5 alu	clear anodised	60	35	3.3	8	opening spring	20
NEW	72-1-4310	6060 T5 alu	black anodised	60	35	3.3	8	opening spring	20

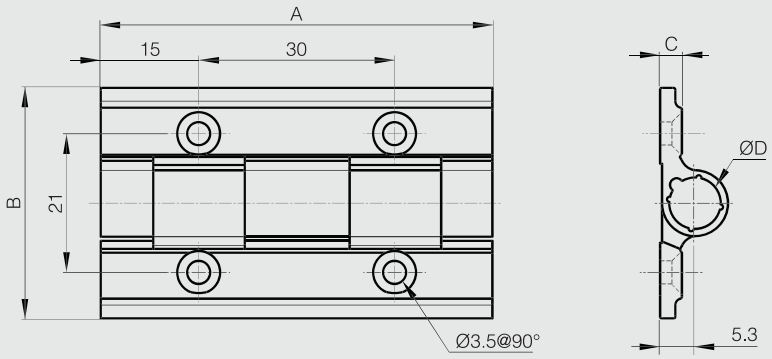

Spring hinges - aluminium profile 0.70 N.m - diameter 8

NEW

180° ALU RoHS

Opening spring force:
M(0°): 0.7 N.m / M(90°): 0.5 N.m / M(180°): 0.3 N.m

	Part number	Material	Finish	A	B	C	D	Note	Weight (g)
NEW	72-1-4314	6060 T5 alu	clear anodised	90	35	3.3	8	opening spring	40
NEW	72-1-4315	6060 T5 alu	black anodised	90	35	3.3	8	opening spring	40

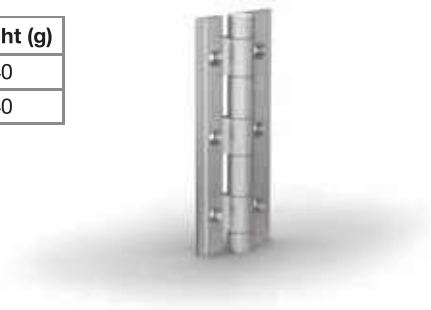

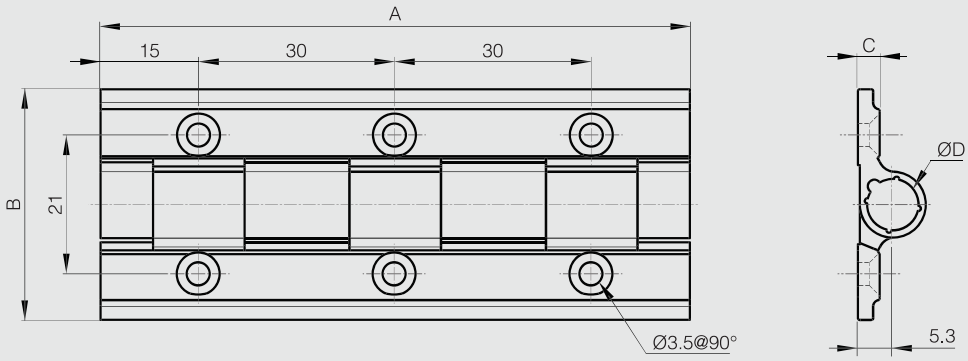

Spring hinges - aluminium profile 0.90 N.m - diameter 8

NEW

180° ALU RoHS

Opening spring force:
M(0°): 0.92 N.m / M(90°): 0.7 N.m / M(180°): 0.44 N.m

	Part number	Material	Finish	A	B	C	D	Note	Weight (g)
NEW	72-1-4316	6060 T5 alu	clear anodised	120	35	3.3	8	opening spring	50
NEW	72-1-4317	6060 T5 alu	black anodised	120	35	3.3	8	opening spring	50

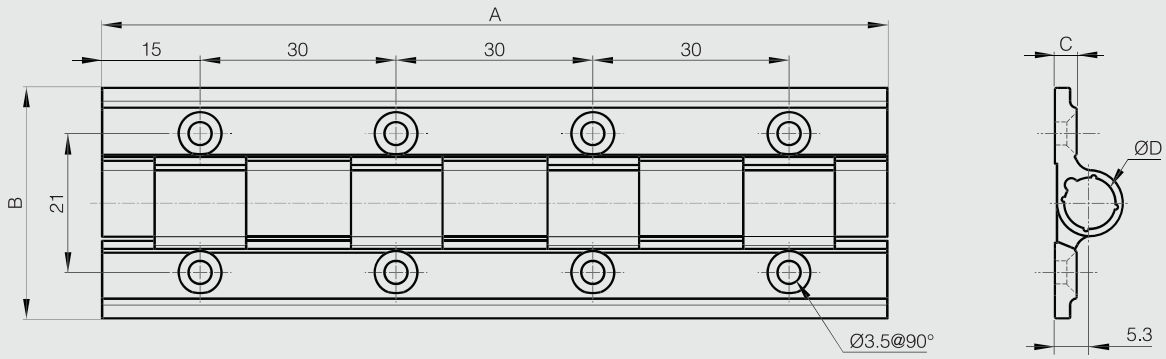

Spring hinges - aluminium profile 0.35 N.m - diameter 13

NEW

180° ALU RoHS

Opening spring force:
M(0°): 0.35 N.m / M(90°): 0.24 N.m / M(180°): 0.12 N.m
Closing spring force:
M(0°): 0.12 N.m / M(90°): 0.24 N.m / M(180°): 0.35 N.m

3 other versions available: free swinging, with friction or with detent mechanism.

	Part number	Material	Finish	A	B	C	D	Note	Weight (g)
	72-1-4220	6060 T5 alu	clear anodised	67	55	4.5	13	opening spring	62
	72-1-4221	6060 T5 alu	black anodised	67	55	4.5	13	opening spring	60
	72-1-4292	6060 T5 alu	clear anodised	67	55	4.5	13	opening spring/ delivered flat	63
	72-1-4293	6060 T5 alu	black anodised	67	55	4.5	13	opening spring/ delivered flat	63
NS	72-1-4366	6060 T5 alu	blue anodised	67	55	4.5	13	opening spring/ delivered flat	60
NS	72-1-4367	6060 T5 alu	red anodised	67	55	4.5	13	opening spring/ delivered flat	60
NS	72-1-4368	6060 T5 alu	bronze anodised	67	55	4.5	13	opening spring/ delivered flat	60
NS	72-1-4369	6060 T5 alu	gold anodised	67	55	4.5	13	opening spring/ delivered flat	60
NEW	72-1-4323	6060 T5 alu	clear anodised	67	55	4.5	13	opening spring / delivered flat / with M6 studs	80
NEW	72-1-4324	6060 T5 alu	black anodised	67	55	4.5	13	opening spring / delivered flat / with M6 studs	80
	72-1-4286	6060 T5 alu	clear anodised	67	55	4.5	13	closing spring	63
	72-1-4287	6060 T5 alu	black anodised	67	55	4.5	13	closing spring	63
NS	72-1-4370	6060 T5 alu	blue anodised	67	55	4.5	13	closing spring	60
NS	72-1-4371	6060 T5 alu	red anodised	67	55	4.5	13	closing spring	60
NS	72-1-4372	6060 T5 alu	bronze anodised	67	55	4.5	13	closing spring	60
NS	72-1-4373	6060 T5 alu	gold anodised	67	55	4.5	13	closing spring	60
NS	72-1-4336	6060 T5 alu	clear anodised	67	55	4.5	13	closing spring / with M6 studs	79
NS	72-1-4337	6060 T5 alu	black anodised	67	55	4.5	13	closing spring / with M6 studs	79

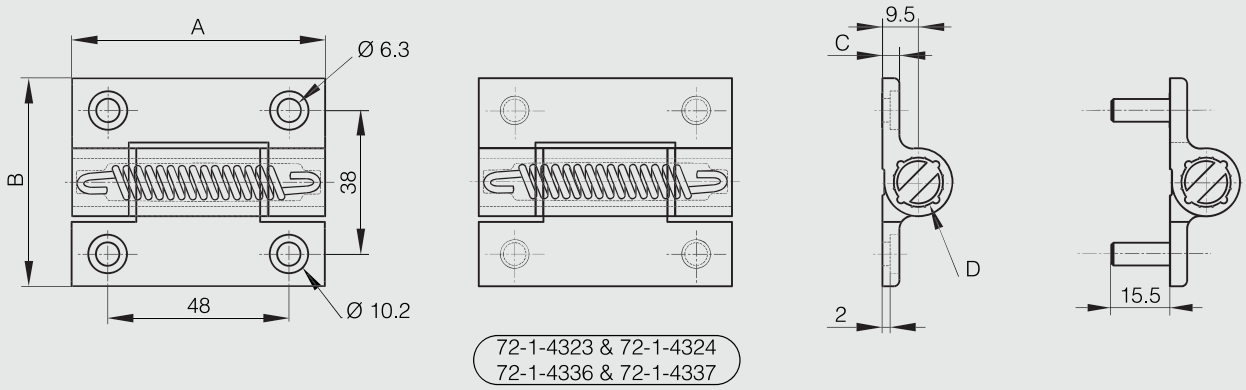

Spring hinges - aluminium profile 0.70 N.m - diameter 13

NEW

180° ALU RoHS

Opening spring force:
M(0°): 0.7 N.m / M(90°): 0.45 N.m / M(180°): 0.23 N.m
Closing spring force:
M(0°): 0.23 N.m / M(90°): 0.45 N.m / M(180°): 0.7 N.m

3 other versions available: free swinging, with friction or with detent mechanism.

	Part number	Material	Finish	A	B	C	D	Note	Weight (g)
	72-1-4218	6060 T5 alu	clear anodised	67	55	4.5	13	opening spring	68
	72-1-4219	6060 T5 alu	black anodised	67	55	4.5	13	opening spring	66
	72-1-4294	6060 T5 alu	clear anodised	67	55	4.5	13	opening spring / delivered flat	66
	72-1-4295	6060 T5 alu	black anodised	67	55	4.5	13	opening spring / delivered flat	66
NS	72-1-4374	6060 T5 alu	blue anodised	67	55	4.5	13	opening spring/ delivered flat	66
NS	72-1-4375	6060 T5 alu	red anodised	67	55	4.5	13	opening spring/ delivered flat	66
NS	72-1-4376	6060 T5 alu	bronze anodised	67	55	4.5	13	opening spring/ delivered flat	66
NS	72-1-4377	6060 T5 alu	gold anodised	67	55	4.5	13	opening spring/ delivered flat	66
NEW	72-1-4325	6060 T5 alu	clear anodised	67	55	4.5	13	opening spring / delivered flat / with M6 studs	85
NEW	72-1-4326	6060 T5 alu	black anodised	67	55	4.5	13	opening spring / delivered flat / with M6 studs	85
	72-1-4272	6060 T5 alu	clear anodised	67	55	4.5	13	closing spring	65
	72-1-4273	6060 T5 alu	black anodised	67	55	4.5	13	closing spring	65
NS	72-1-4378	6060 T5 alu	blue anodised	67	55	4.5	13	closing spring	65
NS	72-1-4379	6060 T5 alu	red anodised	67	55	4.5	13	closing spring	65
NS	72-1-4380	6060 T5 alu	bronze anodised	67	55	4.5	13	closing spring	65
NS	72-1-4381	6060 T5 alu	gold anodised	67	55	4.5	13	closing spring	65
NEW	72-1-4322	6060 T5 alu	clear anodised	67	55	4.5	13	closing spring / with M6 studs	84
NS	72-1-4335	6060 T5 alu	black anodised	67	55	4.5	13	closing spring / with M6 studs	84

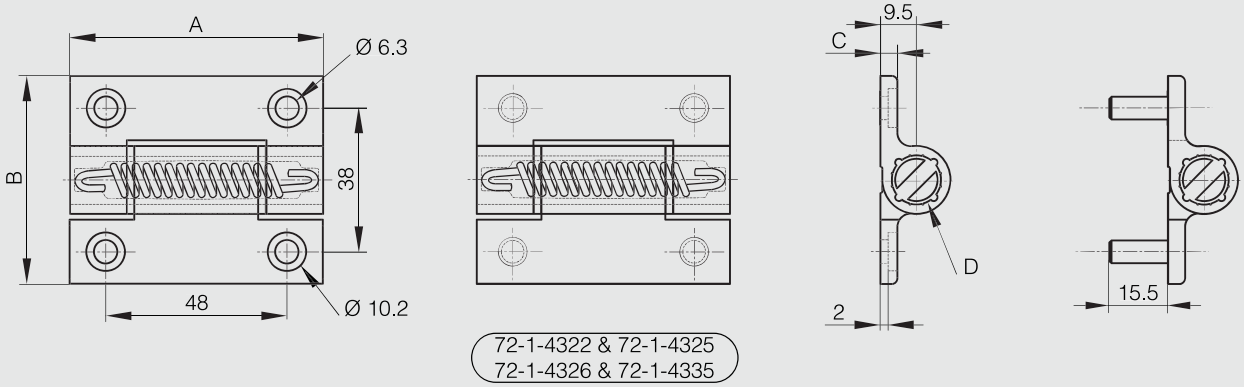

Spring hinges - aluminium profile 1.3 N.m - diameter 13

NEW

180° ALU RoHS

Opening spring force:
M(0°): 1.3 N.m / M(90°): 1.1 N.m / M(180°): 0.9 N.m
Closing spring force:
M(0°): 0.5 N.m / M(90°): 0.7 N.m / M(180°): 1 N.m

3 other versions available: free swinging, with friction or with detent mechanism.

	Part number	Material	Finish	A	B	C	D	Note	Weight (g)
	72-1-4222	6060 T5 alu	clear anodised	67	55	4.5	13	opening spring	68
	72-1-4223	6060 T5 alu	black anodised	67	55	4.5	13	opening spring	68
	72-1-4296	6060 T5 alu	clear anodised	67	55	4.5	13	opening spring / delivered flat	68
	72-1-4297	6060 T5 alu	black anodised	67	55	4.5	13	opening spring / delivered flat	68
NS	72-1-4382	6060 T5 alu	blue anodised	67	55	4.5	13	opening spring/ delivered flat	68
NS	72-1-4383	6060 T5 alu	red anodised	67	55	4.5	13	opening spring/ delivered flat	68
NS	72-1-4384	6060 T5 alu	bronze anodised	67	55	4.5	13	opening spring/ delivered flat	68
NS	72-1-4385	6060 T5 alu	gold anodised	67	55	4.5	13	opening spring/ delivered flat	68
NEW	72-1-4327	6060 T5 alu	clear anodised	67	55	4.5	13	opening spring / delivered flat / with M6 studs	87
NEW	72-1-4328	6060 T5 alu	black anodised	67	55	4.5	13	opening spring / delivered flat / with M6 studs	87
	72-1-4260	6060 T5 alu	clear anodised	67	55	4.5	13	closing spring	67
	72-1-4261	6060 T5 alu	black anodised	67	55	4.5	13	closing spring	67
NS	72-1-4386	6060 T5 alu	blue anodised	67	55	4.5	13	closing spring	67
NS	72-1-4387	6060 T5 alu	red anodised	67	55	4.5	13	closing spring	67
NS	72-1-4388	6060 T5 alu	bronze anodised	67	55	4.5	13	closing spring	67
NS	72-1-4389	6060 T5 alu	gold anodised	67	55	4.5	13	closing spring	67
NEW	72-1-4320	6060 T5 alu	clear anodised	67	55	4.5	13	closing spring / with M6 studs	86
NEW	72-1-4321	6060 T5 alu	black anodised	67	55	4.5	13	closing spring / with M6 studs	86

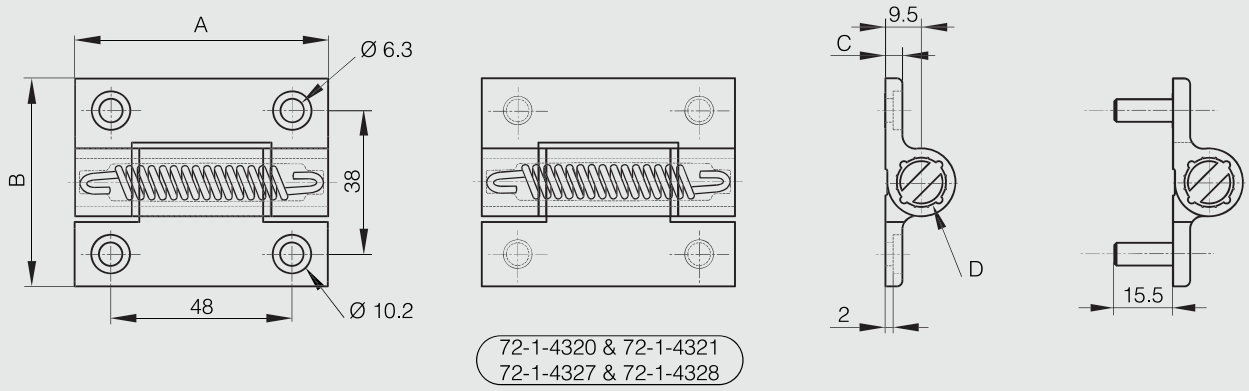

Spring hinges - aluminium profile 3.80 N.m - diameter 18

NEW

180° ALU RoHS

Opening spring force:
M(0°): 3.80 N.m / M(90°): 3.10 N.m / M(180°): 2.40 N.m
Closing spring force:
M(0°): 2.20 N.m / M(90°): 2.90 N.m / M(180°): 3.50 N.m

Free swinging hinge without spring available (part number: 72-1-4241 in colorless or 72-1-4242 in black).

	Part number	Material	Finish	A	B	C	D	Note	Weight (g)
	72-1-4231	6082 T5 alu	clear anodised	100	82.5	5.5	18	opening spring	185
	72-1-4232	6082 T5 alu	black anodised	100	82.5	5.5	18	opening spring	183
	72-1-4258	6082 T5 alu	clear anodised	100	82.5	5.5	18	closing spring	191
	72-1-4259	6082 T5 alu	black anodised	100	82.5	5.5	18	closing spring	191
NEW	72-1-4331	6082 T5 alu	clear anodised	100	82.5	5.5	18	closing spring / with M6 studs	188
NEW	72-1-4332	6082 T5 alu	black anodised	100	82.5	5.5	18	closing spring / with M6 studs	188

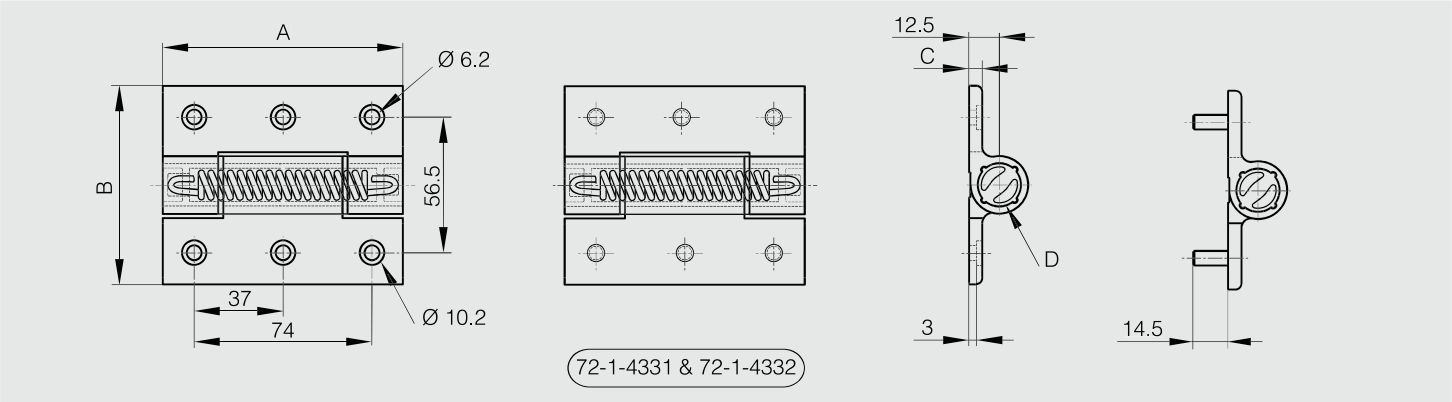

Stainless steel hinges with concealed spring 0.35 N.m

NEW

180° STAINLESS STEEL RoHS

Opening spring force:
M(0°): 0.35 N.m / M(90°): 0.24 N.m / M(180°): 0.12 N.m
Closing spring force:
M(0°): 0.12 N.m / M(90°): 0.24 N.m / M(180°): 0.35 N.m

Spring in Bezinal steel.
Washers in POM.

316 stainless steel version : please contact us.

	Part number	Material	Finish	A	B	C	D	Note	Weight (g)
NEW	72-1-4409	304 stainless steel	deburred	67	55	4.5	13	opening spring/ delivered flat	170
NEW	72-1-4410	304 stainless steel	deburred	67	55	4.5	13	closing spring	170

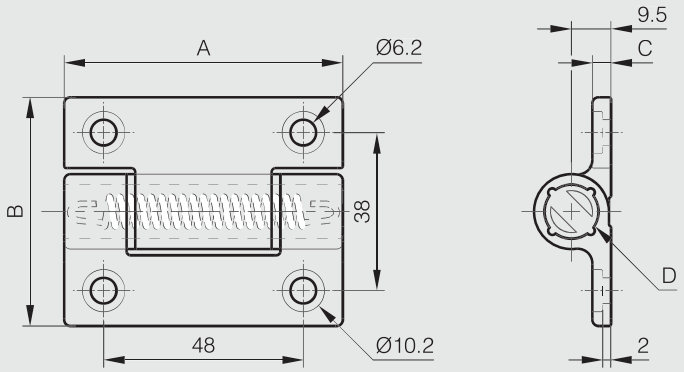

Stainless steel hinges with concealed spring 0.7 N.m

NEW

180° STAINLESS STEEL RoHS

Opening spring force:
M(0°): 0.7 N.m / M(90°): 0.45 N.m / M(180°): 0.23 N.m
Closing spring force:
M(0°): 0.23 N.m / M(90°): 0.45 N.m / M(180°): 0.7 N.m

Spring in Bezinal steel.
Washers in POM.

316 stainless steel version : please contact us.

	Part number	Material	Finish	A	B	C	D	Note	Weight (g)
NEW	72-1-4411	304 stainless steel	deburred	67	55	4.5	13	opening spring/ delivered flat	170
NEW	72-1-4412	304 stainless steel	deburred	67	55	4.5	13	closing spring	170

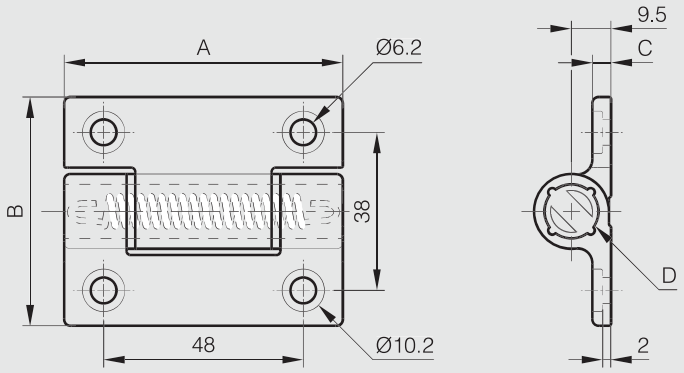

Stainless steel hinges with concealed spring 1.3 N.m

NEW

180° INOX RoHS

Opening spring force:
M(0°): 1.3 N.m / M(90°): 1.1 N.m / M(180°): 0.9 N.m
Closing spring force:
M(0°): 0.5 N.m / M(90°): 0.7 N.m / M(180°): 1 N.m

Spring in Bezinal steel.
Washers in POM.

316 stainless steel version : please contact us.

	Part number	Material	Finish	A	B	C	D	Note	Weight (g)
NEW	72-1-4413	304 stainless steel	deburred	67	55	4.5	13	opening spring/ delivered flat	170
NEW	72-1-4414	304 stainless steel	deburred	67	55	4.5	13	closing spring	170

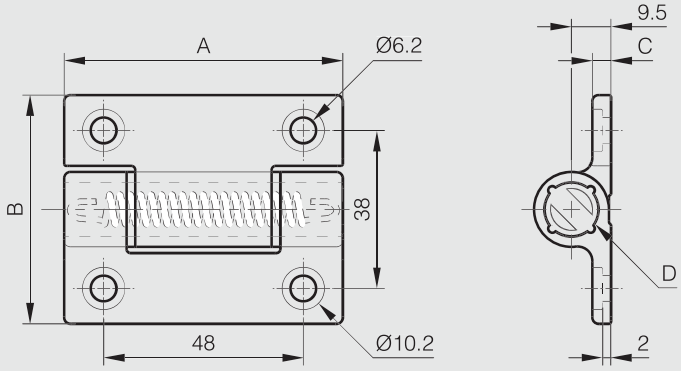

Compact spring hinges 1.6 N.m

NEW

270° STAINLESS STEEL RoHS

Opening spring force:
M(0°) : 1.6 N.m / M(90°) : 1.2 N.m / M(180°) : 0.84 N.m

Closing spring force:
M(0°) : 0.75 N.m / M(90°) : 1.2 N.m / M(180°) : 1.65 N.m

Spring: stainless steel

	Part number	Material	Finish	A	B	C	D	Note	Weight (g)
NEW	71-1-3912	304 stainless steel	raw	85	55	2	5	opening spring / delivered flat	107
NEW	71-1-3914	304 stainless steel	raw	85	55	2	5	closing spring / delivered flat	107

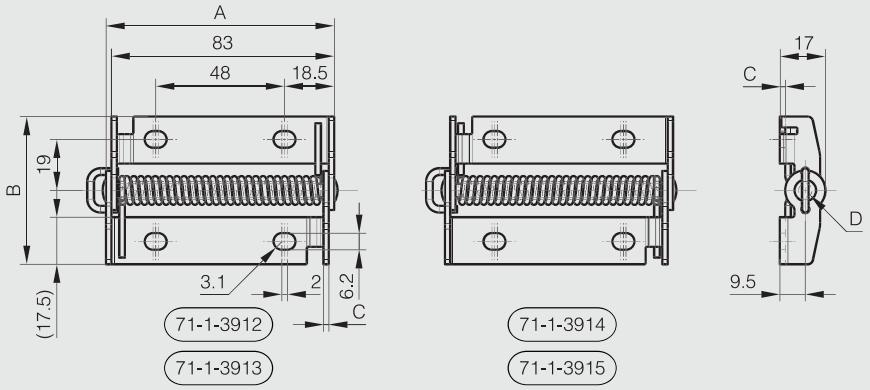

Compact spring hinges 2.2 N.m

NEW

270° STAINLESS STEEL RoHS

Opening spring force:
M(0°) : 2.2 N.m / M(90°) : 1.6 N.m / M(180°) : 1.1 N.m

Closing spring force:
M(0°) : 1.0 N.m / M(90°) : 1.6 N.m / M(180°) : 2.2 N.m

Spring: stainless steel

	Part number	Material	Finish	A	B	C	D	Note	Weight (g)
NEW	71-1-3913	304 stainless steel	raw	85	55	2	5	opening spring / delivered flat	107
NEW	71-1-3915	304 stainless steel	raw	85	55	2	5	closing spring / delivered flat	107

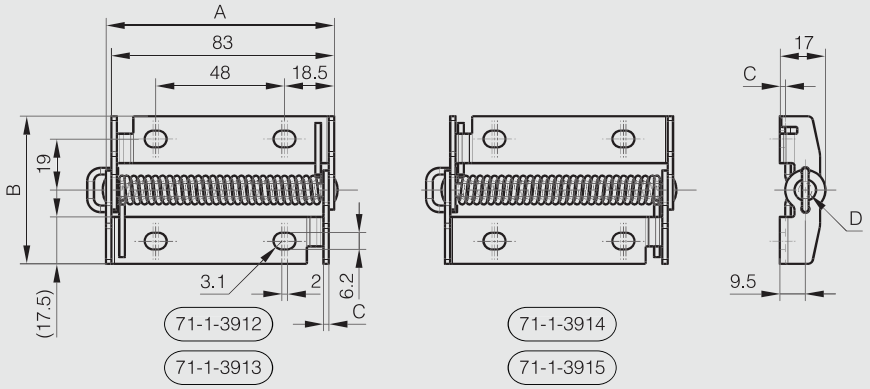

Opening spring hinge 2.2 N.m

Opening spring force:
M(0°): 2.2 N.m / M(90°): 1.7 N.m / M(180°): 1.2 N.m

Pin in 304 stainless steel. Spring in Bezinal steel.

Part number	Material	Finish	A	B	C	D	Weight (g)
71-1-3851	steel	zinc plated	105	80	3	6	239

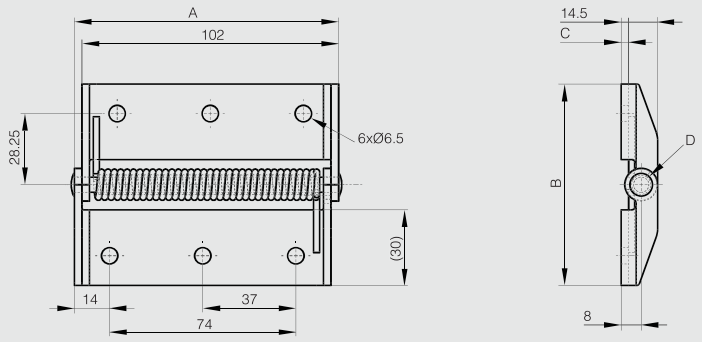

Opening spring hinges 120 mm long

NEW

270° ALU STAINLESS STEEL STEEL RoHS

Opening spring force:
M(0°): 0.85 N.m / M(90°): 0.56 N.m / M(180°): 0.28 N.m
Stainless steel spring.

	Part number	Material	Finish	A	B	C	D	F	G	S	Note	Weight (g)
	71-1-3799	steel	raw	120	40	1.5	4				undrilled	83
	71-1-3805	steel	zinc plated	120	40	1.5	4	22.7	60	4	drilled	83
NS	71-1-3885	steel	zinc plated	120	40	1.5	4	22.7	60	4	with M5 studs	94
	71-1-3860	5754 alu	raw	120	40	1.5	4				undrilled	45
	71-1-3861	5754 alu	raw	120	40	1.5	4	22.7	60	4	drilled	45
NS	71-1-3887	5754 alu	raw	120	40	1.5	4	22.7	60	4	with M5 studs	57
	71-1-3787	304 stainless steel	raw	120	40	1.5	4				undrilled	83
	71-1-3793	304 stainless steel	raw	120	40	1.5	4	22.7	60	4	drilled	83
NEW	71-1-3879	304 stainless steel	raw	120	40	1.5	4	22.7	60	4	with M5 studs	94

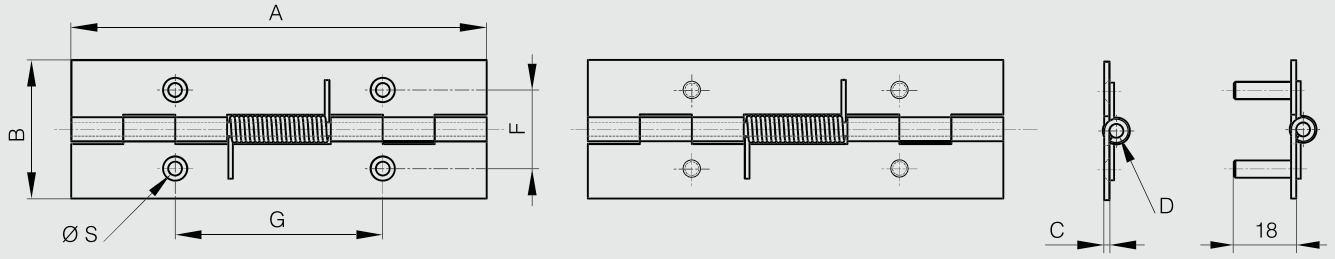

71-1-3793 & 71-1-3805 & 71-1-3861

71-1-3879 & 71-1-3885 & 71-1-3887

Closing spring hinges 120 mm long

NEW

270° ALU STAINLESS STEEL STEEL RoHS

Closing spring force:
M(0°): 0.28 N.m / M(90°): 0.56 N.m / M(180°): 0.85 N.m
Stainless steel spring.

	Part number	Material	Finish	A	B	C	D	F	G	S	Note	Weight (g)
	71-1-3802	steel	raw	120	40	1.5	4				undrilled	82
	71-1-3808	steel	zinc plated	120	40	1.5	4	22.7	60	4	drilled	83
NS	71-1-3886	steel	zinc plated	120	40	1.5	4	22.7	60	4	with M5 studs	94
	71-1-3862	5754 alu	raw	120	40	1.5	4				undrilled	45
	71-1-3863	5754 alu	raw	120	40	1.5	4	22.7	60	4	drilled	45
NS	71-1-3888	5754 alu	raw	120	40	1.5	4	22.7	60	4	with M5 studs	57
	71-1-3790	304 stainless steel	raw	120	40	1.5	4				undrilled	83
	71-1-3796	304 stainless steel	raw	120	40	1.5	4	22.7	60	4	drilled	83
NEW	71-1-3880	304 stainless steel	raw	120	40	1.5	4	22.7	60	4	with M5 studs	94

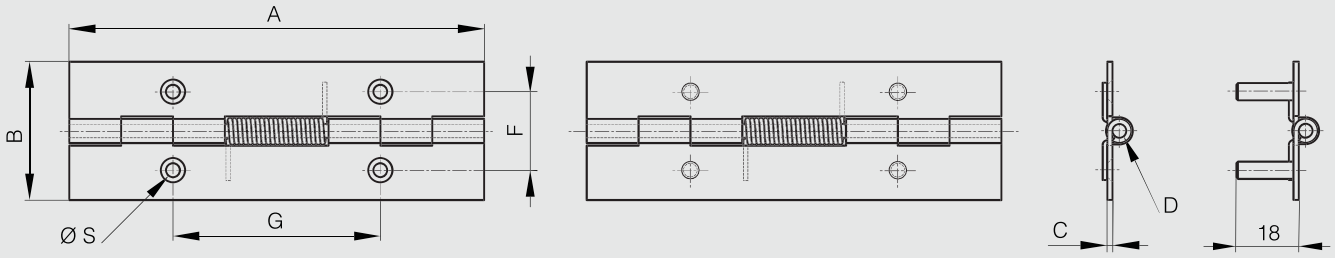

71-1-3796 & 71-1-3808 & 71-1-3863

71-1-3880 & 71-1-3886 & 71-1-3888

Opening spring hinges 180 mm long

NEW

270° STAINLESS STEEL STEEL RoHS

Opening spring force:
M(0°): 1.7 N.m / M(90°): 1.1 N.m / M(180°): 0.56 N.m

Stainless steel spring.

	Part number	Material	Finish	A	B	C	D	F	G	S	Note	Weight (g)
	71-1-3800	steel	raw	180	40	1.5	4				undrilled	124
	71-1-3806	steel	zinc plated	180	40	1.5	4	22.7	60	4	drilled	125
NS	71-1-3890	steel	zinc plated	180	40	1.5	4	22.7	60	4	with M5 studs	142
	71-1-3788	304 stainless steel	raw	180	40	1.5	4				undrilled	124
	71-1-3794	304 stainless steel	raw	180	40	1.5	4	22.7	60	4	drilled	124
NS	71-1-3881	304 stainless steel	raw	180	40	1.5	4	22.7	60	4	with M5 studs	142

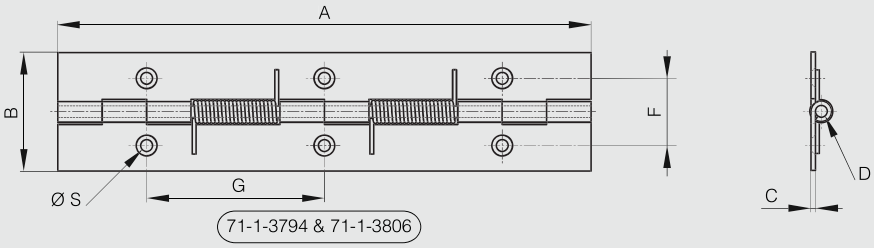

71-1-3794 & 71-1-3806

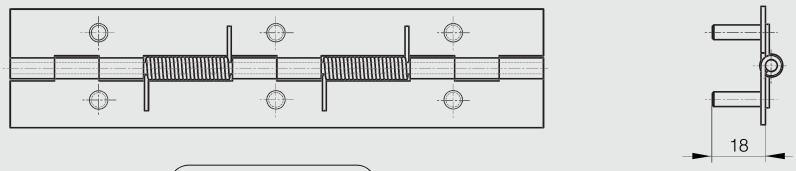

71-1-3881 & 71-1-3890

Closing spring hinges 180 mm long

NEW

270° STAINLESS STEEL STEEL RoHS

Closing spring force:
M(0°): 0.56 N.m / M(90°): 1.1 N.m / M(180°): 1.7 N.m

Stainless steel spring.

	Part number	Material	Finish	A	B	C	D	F	G	S	Note	Weight (g)
	71-1-3803	steel	raw	180	40	1.5	4				undrilled	124
	71-1-3809	steel	zinc plated	180	40	1.5	4	22.7	60	4	drilled	124
NS	71-1-3891	steel	zinc plated	180	40	1.5	4	22.7	60	4	with M5 studs	142
	71-1-3791	304 stainless steel	raw	180	40	1.5	4				undrilled	124
	71-1-3797	304 stainless steel	raw	180	40	1.5	4	22.7	60	4	drilled	124
NS	71-1-3889	304 stainless steel	raw	180	40	1.5	4	22.7	60	4	with M5 studs	142

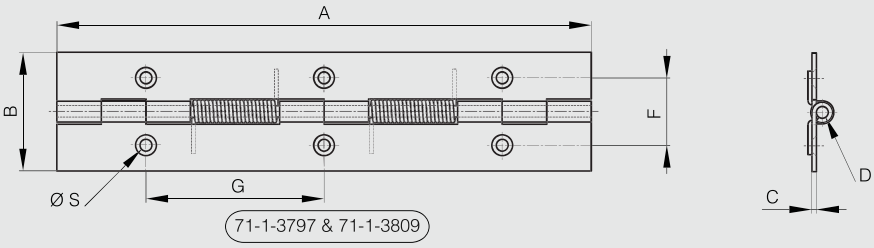

71-1-3797 & 71-1-3809

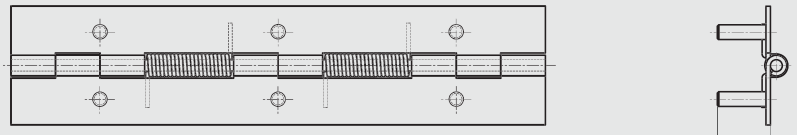

71-1-3889 & 71-1-3891

Opening spring hinges 240 mm long

NEW

270° STAINLESS STEEL STEEL RoHS

Opening spring force:
M(0°): 2.55 N.m / M(90°): 1.68 N.m / M(180°): 0.84 N.m

Stainless steel spring.

	Part number	Material	Finish	A	B	C	D	F	G	S	Note	Weight (g)
	71-1-3801	steel	raw	240	40	1.5	4				undrilled	164
	71-1-3807	steel	zinc plated	240	40	1.5	4	22.7	60	4	drilled	165
NS	71-1-3893	steel	zinc plated	240	40	1.5	4	22.7	60	4	with M5 studs	187
	71-1-3789	304 stainless steel	raw	240	40	1.5	4				undrilled	165
	71-1-3795	304 stainless steel	raw	240	40	1.5	4	22.7	60	4	drilled	164
NS	71-1-3882	304 stainless steel	raw	240	40	1.5	4	22.7	60	4	with M5 studs	187

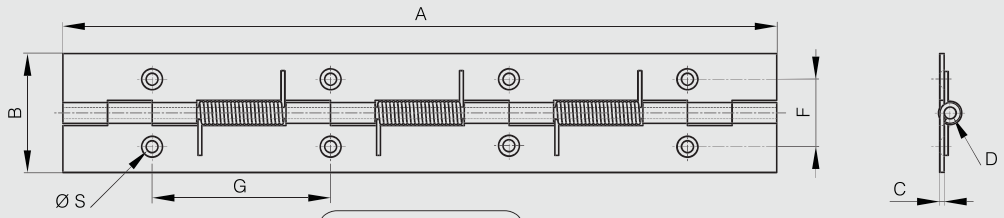

71-1-3795 & 71-1-3807

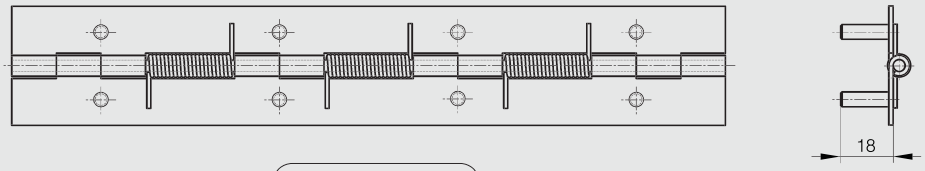

71-1-3882 & 71-1-3893

Closing spring hinges 240 mm long

NEW

270° STAINLESS STEEL STEEL RoHS

Closing spring force:
M(0°): 0.84 N.m / M(90°): 1.68 N.m / M(180°): 2.55 N.m

Stainless steel spring.

	Part number	Material	Finish	A	B	C	D	F	G	S	Note	Weight (g)
	71-1-3804	steel	raw	240	40	1.5	4				undrilled	164
	71-1-3810	steel	zinc plated	240	40	1.5	4	22.7	60	4	drilled	164
NS	71-1-3894	steel	zinc plated	240	40	1.5	4	22.7	60	4	with M5 studs	187
	71-1-3792	304 stainless steel	raw	240	40	1.5	4				undrilled	165
	71-1-3798	304 stainless steel	raw	240	40	1.5	4	22.7	60	4	drilled	164
NS	71-1-3792	304 stainless steel	raw	240	40	1.5	4	22.7	60	4	with M5 studs	187

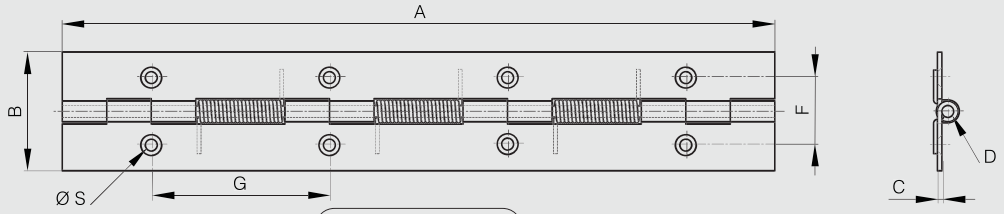

71-1-3798 & 71-1-3810

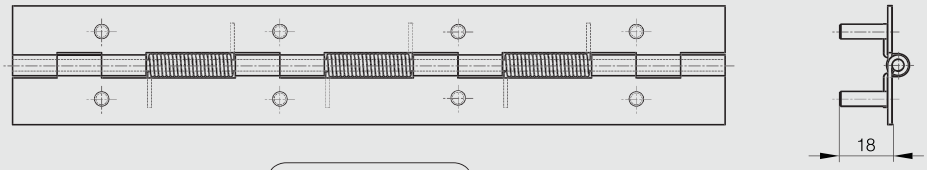

71-1-3892 & 71-1-3894

Spring hinges 50 mm long

270° ALU STAINLESS STEEL STEEL RoHS

Opening spring force:
M(0°): 1.5 N.m / M(90°): 1.1 N.m / M(180°): 0.65 N.m

Closing spring force:
M(0°): 0.25 N.m / M(90°): 0.65 N.m / M(180°): 1.1 N.m

Part number	Material	Finish	A	B	C	D	F	G	S	Note	Weight (g)
71-1-3519	steel	zinc plated	50	50	2	4	9	30	5	stainless steel opening spring	50
71-1-3619	steel	zinc plated	50	50	2	4	9	30	5	stainless steel closing spring	50
71-1-3856	5754 alu	raw	50	50	2	4	9	30	5	Bezinal steel opening spring	22
71-1-3857	5754 alu	raw	50	50	2	4	9	30	5	Bezinal steel closing spring	22
71-1-3553	304 stainless steel	raw	50	50	2	4	10	30	5	stainless steel opening spring	50
71-1-3586	304 stainless steel	raw	50	50	2	4	10	30	5	stainless steel closing spring	50

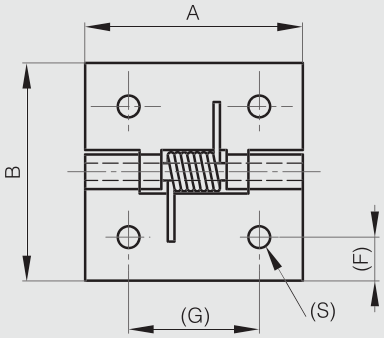

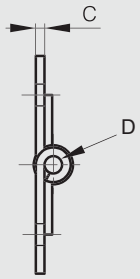

Spring hinges 60 mm long - with 2 holes

270° STEEL RoHS

Opening spring force:
M(0°): 0.09 N.m / M(90°): 0.07 N.m / M(180°): 0.045 N.m

Closing spring force:
M(0°): 0.045 N.m / M(90°): 0.07 N.m / M(180°): 0.09 N.m

Part number	Material	Finish	A	B	C	D	F	G	S	Note	Weight (g)
71-1-3579	steel	raw	60	35	1	3	7.5	35	5	stainless steel opening spring	22
71-1-3617	steel	raw	60	35	1	3	7.5	35	5	stainless steel closing spring	23

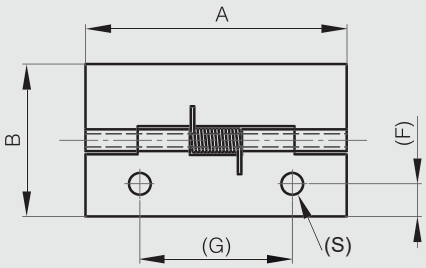

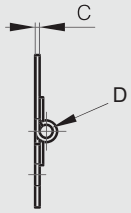

Spring hinge 60 mm long - with 4 holes

Opening spring force:
M(0°): 0.11 N.m / M(90°): 0.09 N.m / M(180°): 0.07 N.m

Part number	Material	Finish	A	B	C	D	F	G	S1	S2	Note	Weight (g)
71-1-3560	430 stainless steel	raw	60	35	1	3	7.5	35	3.1	5	stainless steel opening spring	22

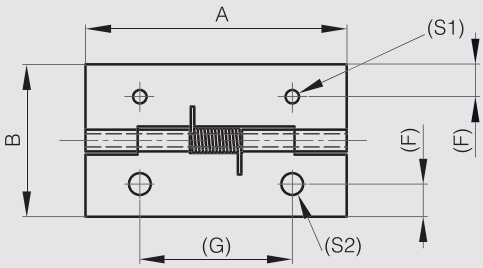

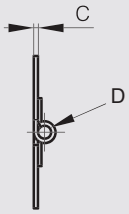

Spring hinges 75 mm long - drilled

Opening spring force:
M(0°): 0.12 N.m / M(90°): 0.09 N.m / M(180°): 0.06 N.m

Part number	Material	Finish	A	B	C	D	F	G	S	Note	Weight (g)
71-1-3305	steel	raw	75	20	0.8	2	11.2	60	2.8	stainless steel opening spring	12
71-1-3582	304 stainless steel	raw	75	20	0.8	2	11.2	60	2.8	stainless steel opening spring	12

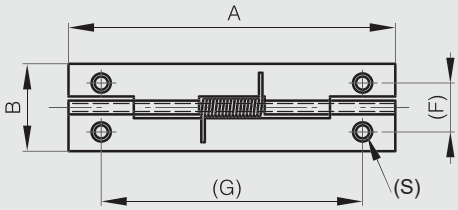

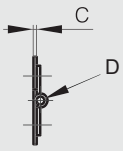

Spring hinges 75 mm long - undrilled

Opening spring force:
M(0°): 0.12 N.m / M(90°): 0.095 N.m / M(180°): 0.07 N.m

Part number	Material	Finish	A	B	C	D	Note	Weight (g)
71-1-3309	steel	raw	75	30	0.8	2	stainless steel opening spring	18
71-1-3583	304 stainless steel	raw	75	30	0.8	2	stainless steel opening spring	19

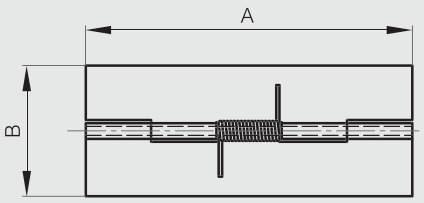

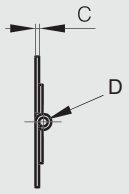

Spring hinges 80 mm long

Opening spring force:
M(0°): 0.17 N.m / M(90°): 0.12 N.m / M(180°): 0.065 N.m

Part number	Material	Finish	A	B	C	D	F	G	S	Note	Weight (g)
71-1-3578	304 stainless steel	raw	80	23.5	1	3	4.5	60	4	stainless steel opening spring	25
71-1-3304	430 stainless steel	raw	80	23.5	1	3	4.5	60	4	stainless steel opening spring	25

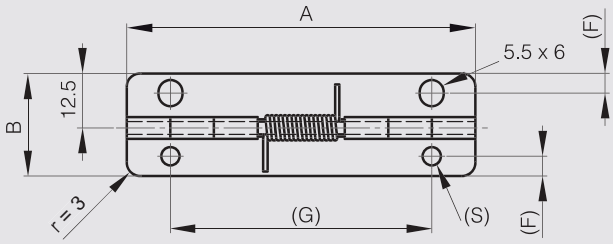

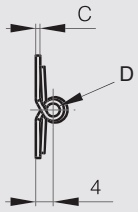

Spring hinges 160 mm long

Opening spring force for part numbers 71-1-3580 and 71-1-3581:
M(0°): 0.9 N.m / M(90°): 0.86 N.m / M(180°): 0.6 N.m

Closing spring force for part numbers 71-1-3618 and 71-1-3835:
M(0°): 0.12 N.m / M(90°): 0.44 N.m / M(180°): 0.55 N.m

Punched pin.

Part number	Material	Finish	A	B	C	D	F	G	S	Note	Weight (g)
71-1-3580	steel	raw	160	46	3	6.5	30	70	4.2	stainless steel opening spring	208
71-1-3618	steel	raw	160	46	3	6.5	30	70	4.2	stainless steel closing spring	208
71-1-3581	304 stainless steel	raw	160	46	3	6.5	30	70	4.2	stainless steel opening spring	208
71-1-3835	304 stainless steel	raw	160	46	3	6.5	30	70	4.2	stainless steel closing spring	208

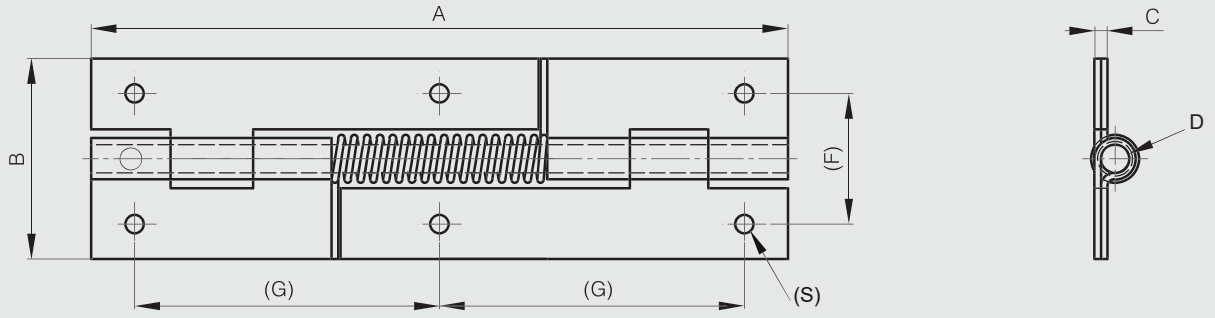

Spring hinges 170 mm long

Opening spring force:
M(0°): 0.24 N.m / M(90°): 0.19 N.m / M(180°): 0.14 N.m

Part number	Material	Finish	A	B	C	D	Note	Weight (g)
71-1-3303	steel	raw	170	30	0.8	2	stainless steel opening spring	41
71-1-3522	304 stainless steel	raw	170	30	0.8	2	stainless steel opening spring	42

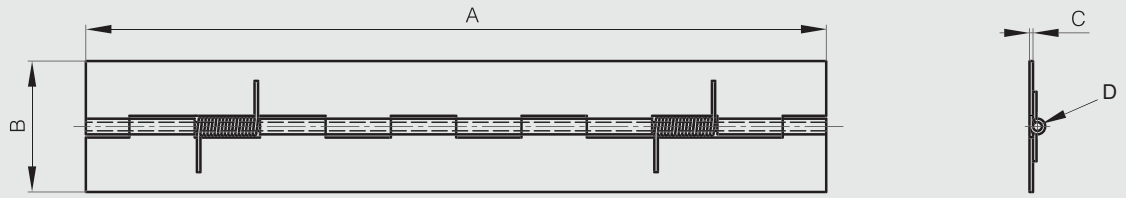

Cranked spring hinge 66 mm long

Spring force:
M (0°): 0.07 N.m / M (90°): 0.22 N.m / M (180°): 0.38 N.m

Part number	Material	Finish	A	B	C	D	Note	Weight (g)
71-1-3649	316 stainless steel	brightened	66	22.5	1.5	4	closing spring	39

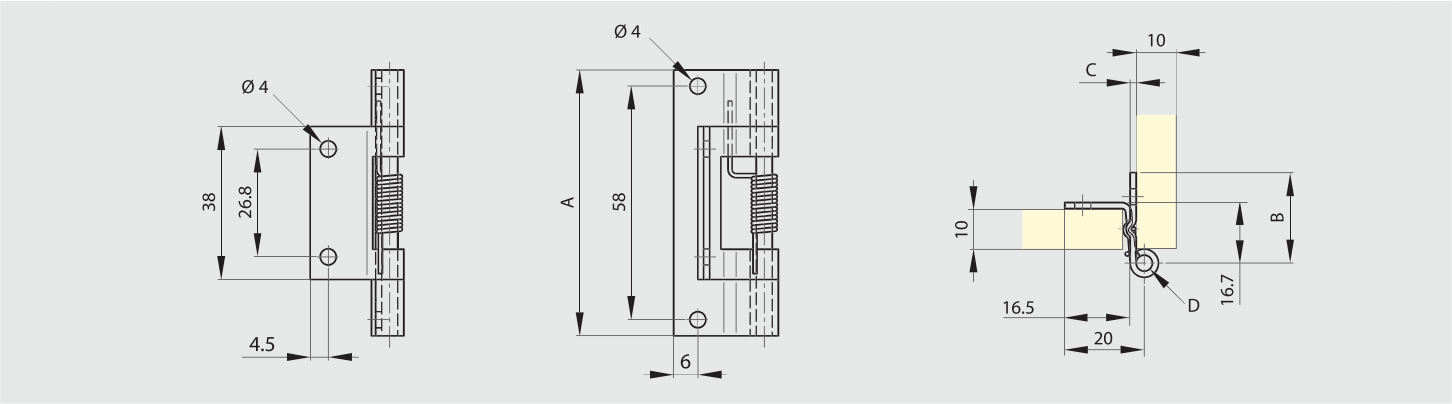

Cranked spring hinge 60 mm long

Spring force:
M (0°): 0.03 N.m / M (90°): 0.16 N.m / M (180°): 0.32 N.m

Part number	Material	Finish	A	B	C	D	Note	Weight (g)
71-1-3622	316 stainless steel	raw	60	30	1.5	3	closing spring	40

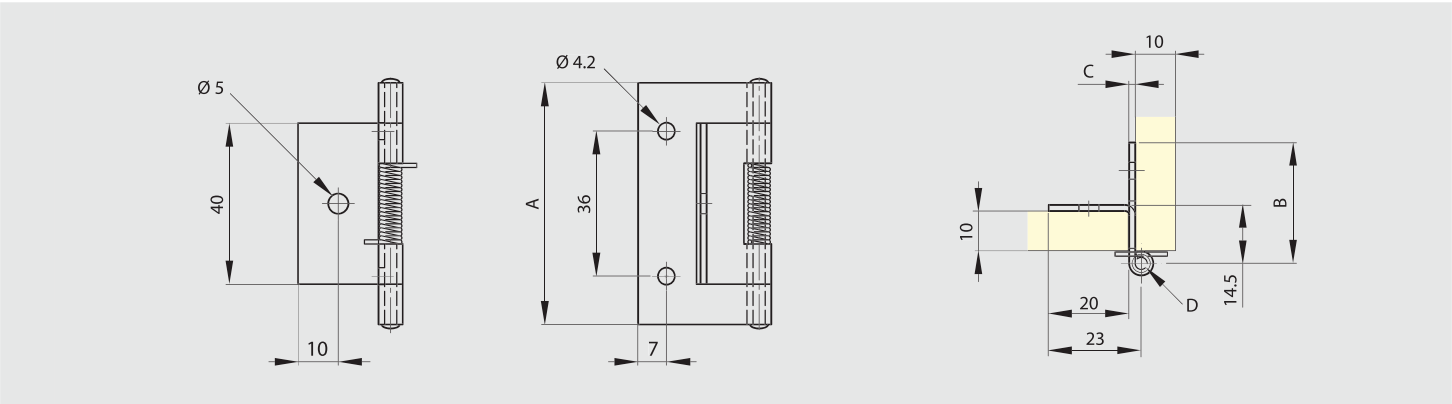

Spring loaded lift-off hinges for doors

Hinges with integrated spring system, sold in pairs.
Brass washer.
Shuts door automatically.
Resistance of the spring: 500 000 cycles. Adjustable spring system.
Opening angle 180°.

Part number	Material	Finish	A	B	D	Weight (g)
14-7-3745	steel	raw	250	25	22	592

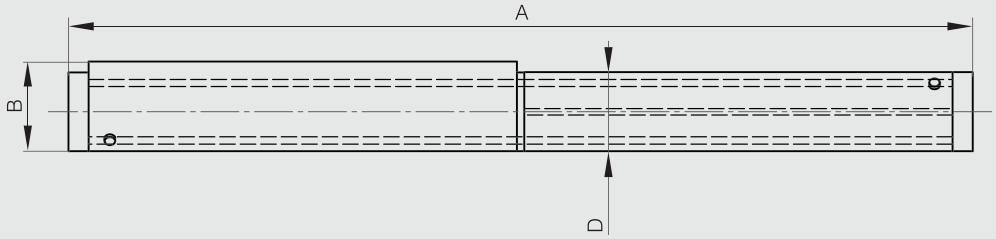

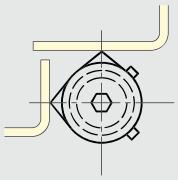

Lift-off rising hinge in stainless steel

Ramp integrated in the pin allows automatic closing by gravity.

Part number	Material	Finish	A	B	C	D	Note	Weight (g)
14-1-3886	304 stainless steel	brushed	80	80	3	8	type 2	216
14-1-3892	304 stainless steel	brushed	80	80	3	8	type 1	216

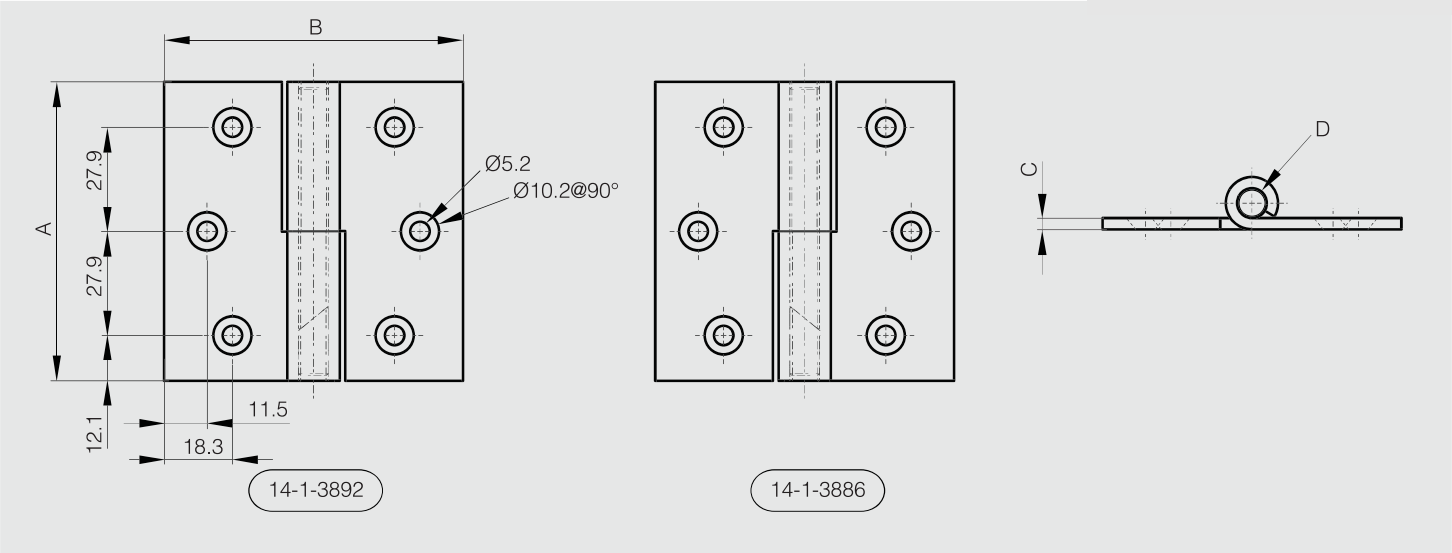

Spring-assist torque hinge

NEW

100° STAINLESS STEEL RoHS

The built-in spring makes lids feel lighter to open (the hinge is for top-opening lids).
The retaining torque is adjustable with a hex key (0 to 3.5 N.m).
Cycling resistance: 50,000 cycles.
Operating temperature: 0°/+40°C.

The hinge is delivered with a pin attached. It keeps the hinge open.
Please do not detach until the hinge is installed.

Optional cover is sold separately (22-7-3556).

	Part number	Material	Finish	A	B	Spring torque	Weight (g)
NEW	71-7-3910	304 stainless steel	polished	70	66	2.2 - 2.9 N.m	218
NEW	71-7-3911	304 stainless steel	polished	70	66	3.5 - 4.4 N.m	222

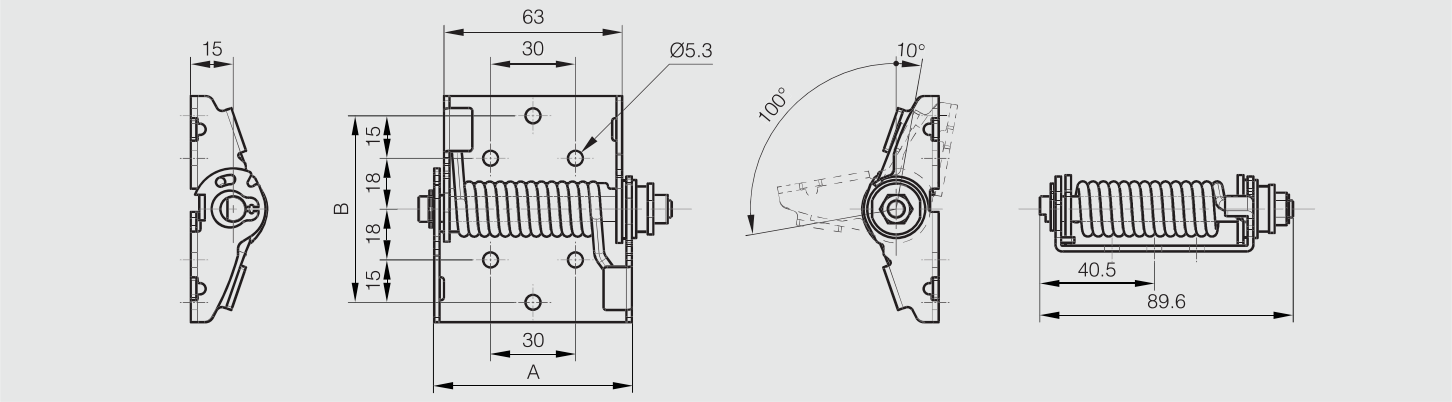

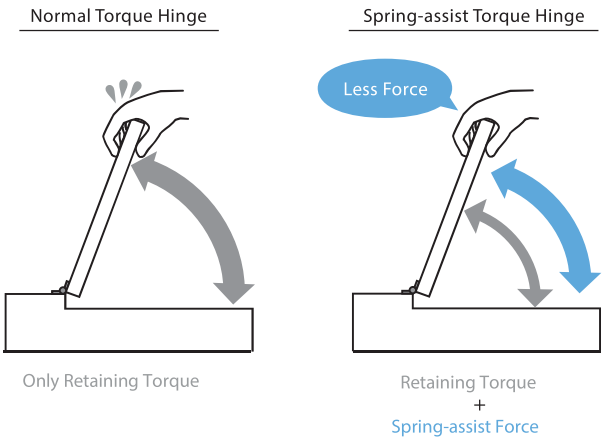

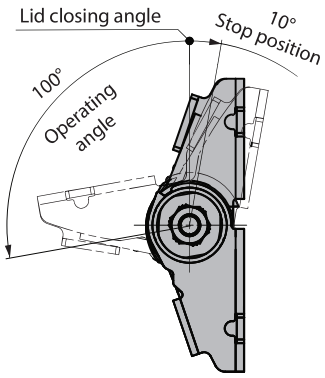

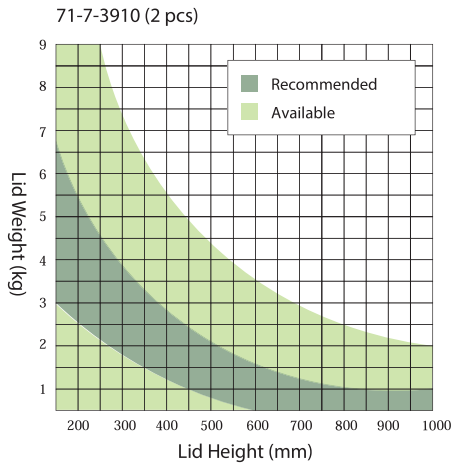

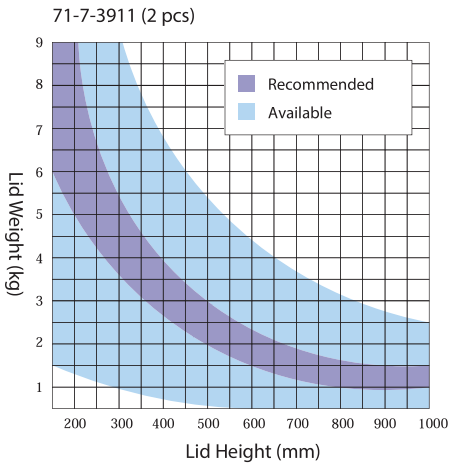

Available Range
- Free-stop: 0° to 100°

Recommended Range
- Free-stop: 0° to 100°
- Moves very llightly: 1° to 99°

* Spring-assisted lid moment is close to 0 N.m.

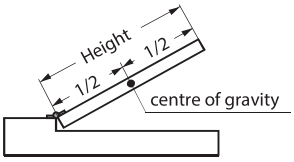

Calculation Condition:
The centre of gravity is at the centre of the lid.

Cover for spring-assist torque hinge

Cover spring-assist torque hinges 71-7-3910 and 71-7-3911.

	Part number	Material	Finish	A	B	Weight (g)
NEW	22-7-3556	PBT	white	90.4	90	41

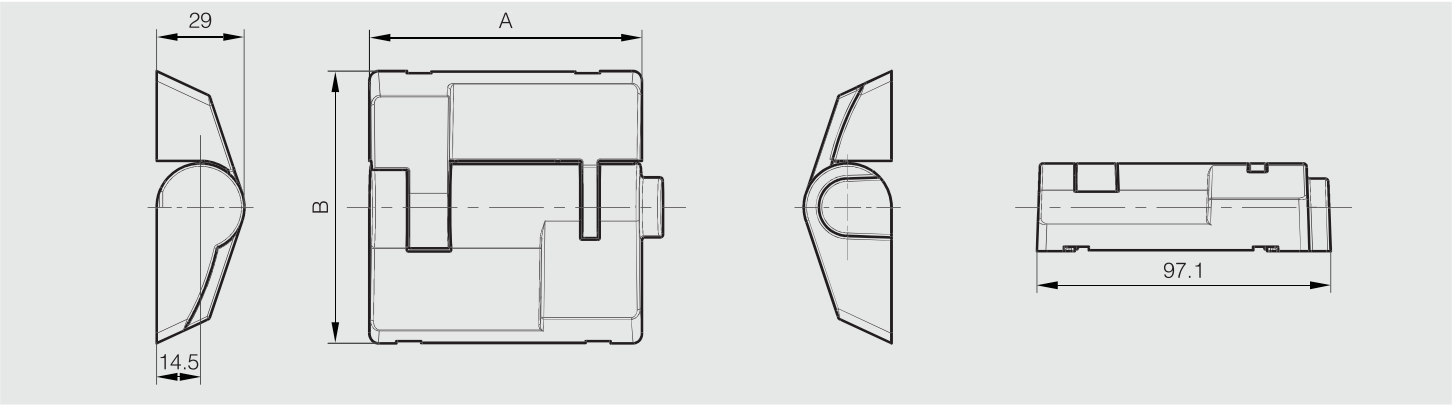

Balance-adjustable lift-assist hinge

NEW 100° STAINLESS STEEL RoHS

Easy to lift heavy top-opening lids due to spring tension (lift-assist).
A built-in damper prevent lids from slamming shut (soft-close).
Adjustable torque by turning a screw (+/-10%).
Designed for horizontal applications with top-opening / upward-opening lids and doors.
Included : a plastic cover for clean appearance.

	Part number	Material	Finish	A	B	C	Torque	Weight (g)
NEW	75-7-0012	430 stainless steel	light grey	180	276	52.7	15 N.m	3400

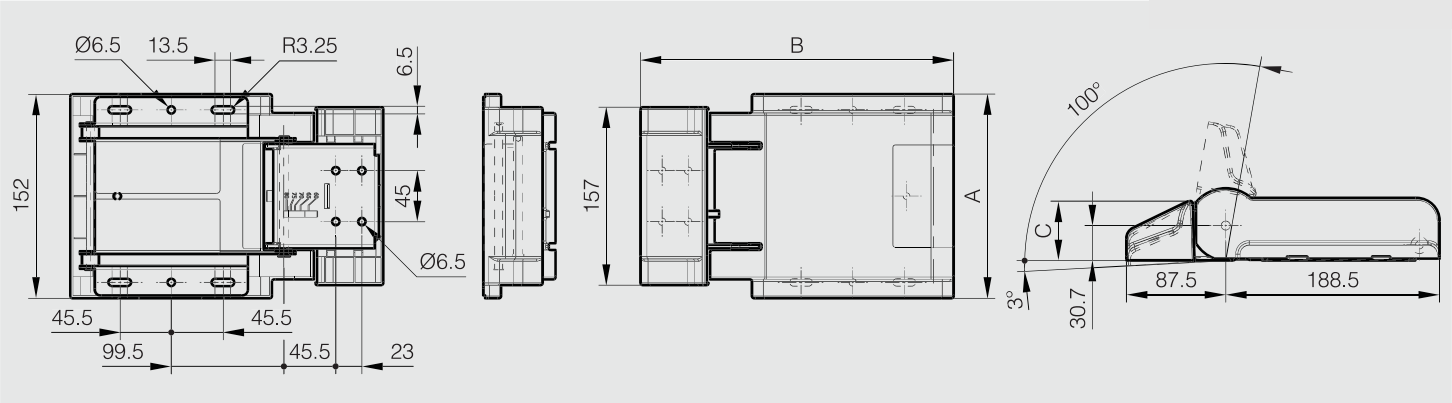

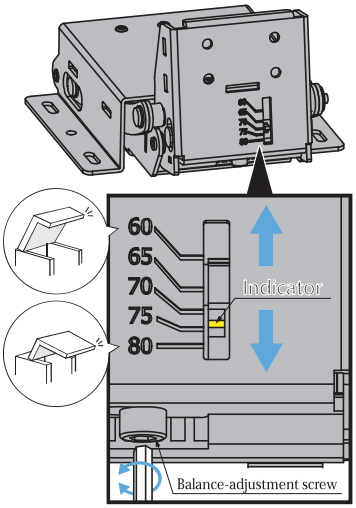

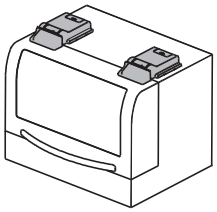

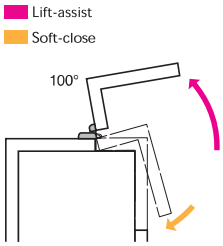

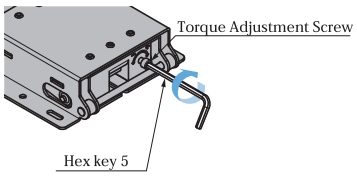

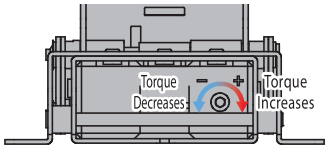

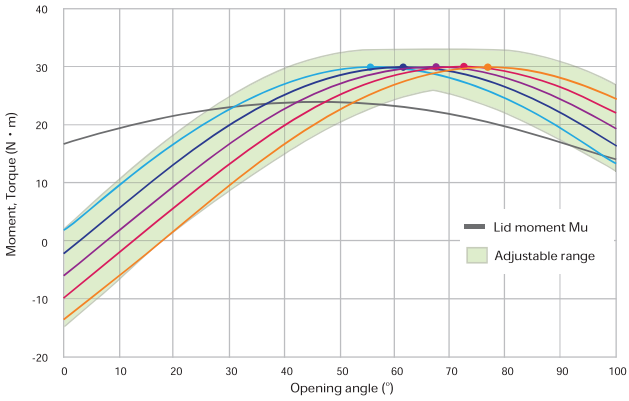

[Indicator's Scale]
60 65 70 (default) 75 80 ● Angle of peak torque

Lid moment Mu > Hinge torque・・・Force is applied in the closing direction of lid.
Lid moment Mu < Hinge torque・・・Force is applied in the opening direction of lid.
Lid specs (example) : X=170mm Y=175mm L=244mm m=8.6kg
(Setting the indicator to 60 is the right adjustment in this case.)

Calculation formula $Mu = m \times L \times \cos\theta$

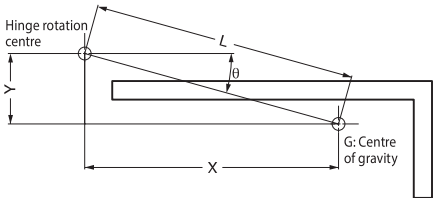

Spring hinges with soft-close dampening

NEW

115° ALU RoHS

2 versions : opening spring version (75-1-0008) or closing spring version (75-1-0009).
For horizontal application.
Easy to lift heavy top-opening due to spring tension (lift-assist).

- Damper working direction: shown by the arrow in the drawing.
- In order not to damage the damping system, the opening angle is limited to 115° by an integrated stop.
- Do not force the door to close faster in damper effective direction. It can cause damage to the product.
- Damping works correctly when the door is opened more than 90 ° before being released (priming).

- Torque damping from 1.7 to 2.5 N.m.
- Spring torque is different depending on part number :
Opening spring torque for 75-1-0008 : M(180°) : 2.70 Nm / M(65°) : 3.69 Nm
Closing spring torque for 75-1-0009 : M(0°) : 2.68 Nm / M(115°) : 3.65 Nm

- Operating temperature: 0 to +40°C.

Please contact us for more information.

	Part number	Material	Finish	A	B	C	D	Torque	Note	Weight (g)
NEW	75-1-0008	6082 T5 Alu	clear anodised	150	82.5	5.5	18	1.7 – 2.5 N.m	opening spring	32
NEW	75-1-0009	6082 T5 Alu	clear anodised	150	82.5	5.5	18	1.7 – 2.5 N.m	closing spring	32

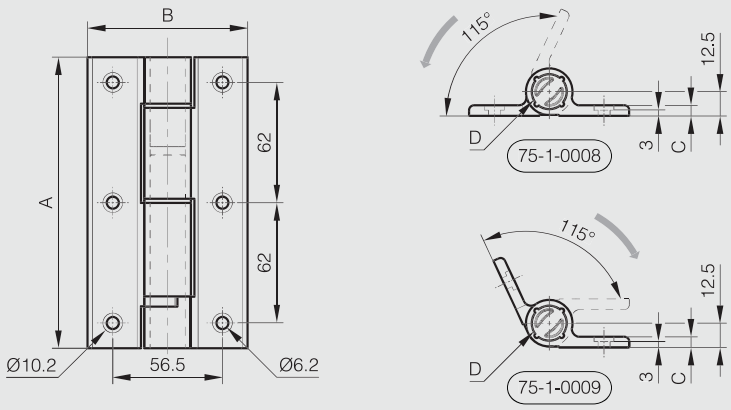

Soft close hinges for vertical application

NEW

180° POLYMER RoHS

Closing speed of doors is adjustable with a hex key.
Comes with seft-close function which can hold doors closed.
Please use with stoppers to prevent doors from opening over 180°.
Cycling resistance: 50,000 cycles
Operating temperature: 0 to +40°C
Screw cover (included)

	Part number	Material	Finish	A	B	C	Weight (g)
NEW	75-7-0010	polyamide	black	65	68.5	17	85
NEW	75-7-0011	polyamide	light grey	65	68.5	17	85

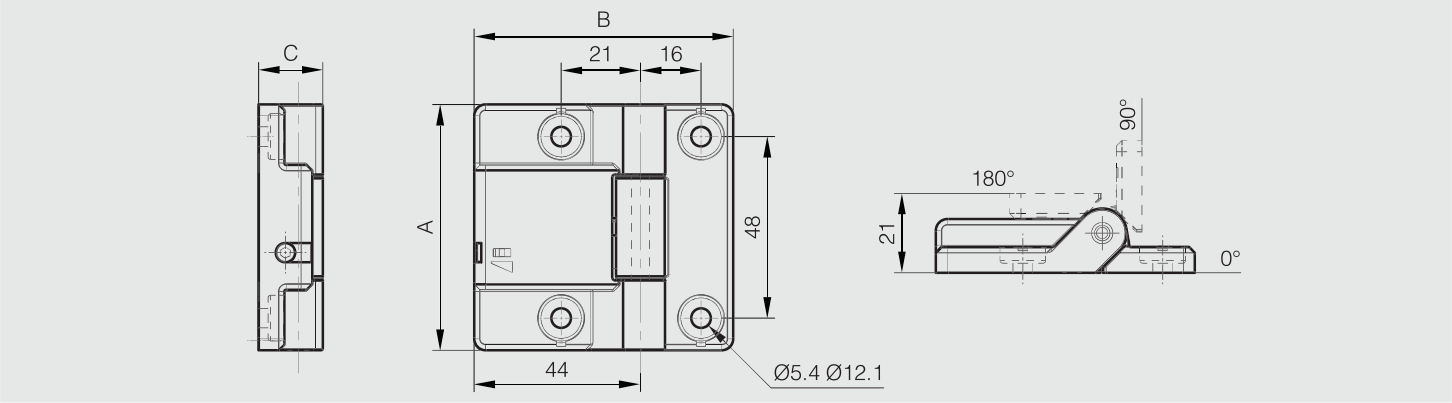

Free
Soft and self closing

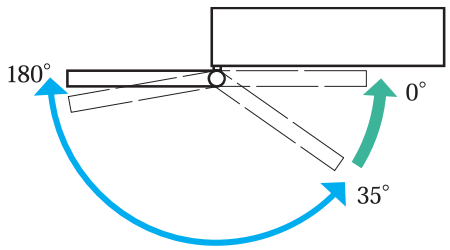

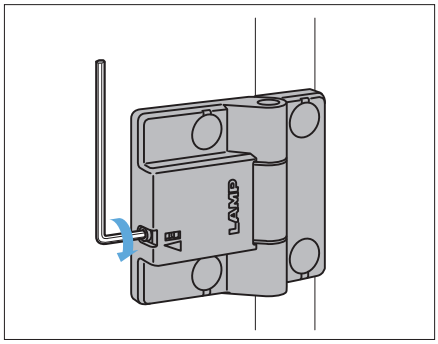

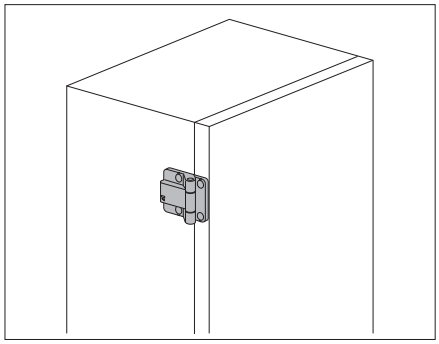

Soft-close dampening hinges in aluminium

NEW

115° ALU RoHS

- Soft-close dampening hinge: soft-close damper keeps lid from slamming shut when the hinge is moved.
- Damper working direction: shown by the arrow in the drawing.
- Operating angle: 115°.
- If the opening angle is wider than 115° (+/- 5°), mechanism is broken and damper doesn't work any longer.
- **Provide a door stopper to prevent from overturning beyond the prescribed angle range.**
- Do not force the door to close faster in damper effective direction. It can cause damage to the product.
- When the door opening angle is small, the dampers may not work smoothly.
- Torque moment (for one hinge): 2.5 to 4.5 N.m.
- Torque calculation:

Torque (N.m) = L (m) x 1/2 x W (kg) x 9.8 with:

- L = door height in metre.
- W = door weight in kilo.

- Operating temperature: 0 to +40°C.
- Soft close of a door (vertical application): door closing system.

Put together with a spring hinge with same dimension (72-1-4231 or 72-1-4232), an automatic soft close of a door is possible without any other component.
Please ask us for more information.

	Part number	Material	Finish	A	B	C	D	Torque	Note	Weight (g)
	75-1-0004	6082 T5 alu	clear anodised	100	82.5	5.5	18	2.5 - 4.5 N.m	Damper working direction when opening the hinge	175
	75-1-0006	6082 T5 alu	clear anodised	100	82.5	5.5	18	2.5 - 4.5 N.m	Damper working direction when closing the hinge	175
NEW	75-1-0007	6082 T5 alu	clear anodised	100	82.5	5.5	18	2.5 - 4.5 N.m	Damper working direction when closing the hinge	179

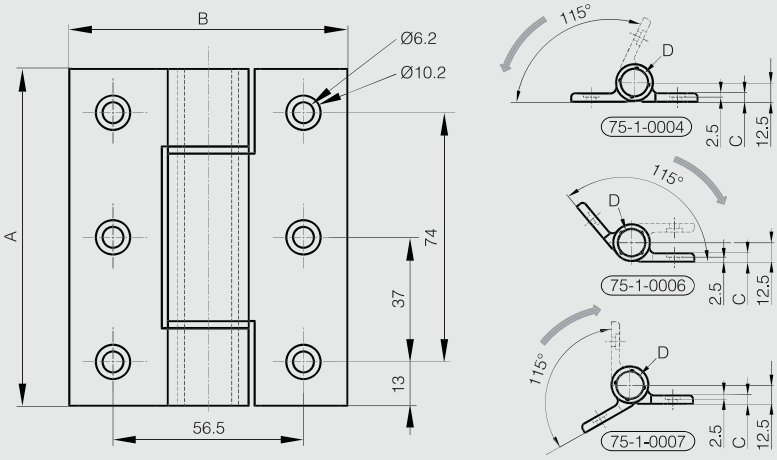

Soft-close dampening hinge in stainless steel

115° STAINLESS STEEL RoHS

- Soft-close dampening hinge: soft-close damper keeps lid from slamming shut when the hinge is put in the closed position.
- Damper working direction: shown by the arrow in the drawing.
- Operating angle: 115°.
- Do not force the door to close faster in damper effective direction. It can cause damage to the product.
- When the door opening angle is small, the dampers may not work smoothly.
- Torque moment (for one hinge): 2.2 to 3.0 N.m.
- Torque calculation:

Torque (N.m) = L (m) x 1/2 x W (kg) x 9.8 with:

• L = door height in metre.
• W = door weight in kilo.

- Operating temperature: 0 to + 40°C.
- Soft close of a door (vertical application): door closing system.

Please ask us for more information.

Part number	Material	Finish	A	B	C	D	Torque	Note	Weight (g)
75-1-0003	304 stainless steel	raw	80	40	3	16	2.2 - 3.0 N.m	Damper working direction when closing the hinge	300

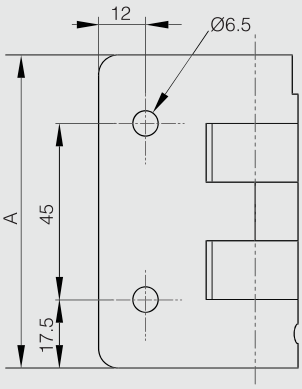

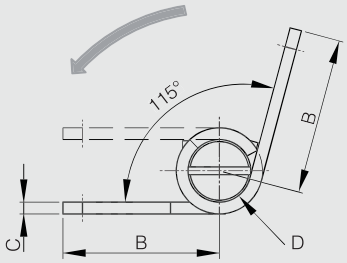

Soft-close dampening hinges in plastic

115° POLYMER RoHS

- Soft close dampening hinge: soft-close damper keeps lid from slamming shut.
- Operating angle: 115°.
- If the opening angle is wider than 115° (+/- 5°), mechanism is broken and damper doesn't work any longer.
- **Provide a door stopper to prevent from overturning beyond the prescribed angle range.**
- Do not force the door to close faster in damper effective direction. It can cause damage to the product.
- When the door opening angle is small, the dampers may not work smoothly.
- Torque moment (pair): 10 to 14 N.m.
- Torque calculation:

Torque (N.m) = L (m) x 1/2 x W (kg) x 9.8 with:

• L = door height in metre.
• W = door weight in kilo.

- Operating temperature: 0 to +40°C
- 2 damper working directions available:

• part number 54-7-3543: damper working direction when opening the hinge (as shown by the arrow on the drawing).
• part number 54-7-3544: damper working direction when closing the hinge (not shown).

- Mounting examples: see drawings.

Part number	Material	Finish	A	B	C	D	Torque	Note	Weight (g)
54-7-3543	polymer	dark grey	115	72	26.5	26	5 - 7 N.m	Damper working direction when opening the hinge: hinge without marking color (backside)	182
54-7-3544	polymer	dark grey	115	72	26.5	26	5 - 7 N.m	Damper working direction when closing the hinge: hinge with red marking color (backside)	184

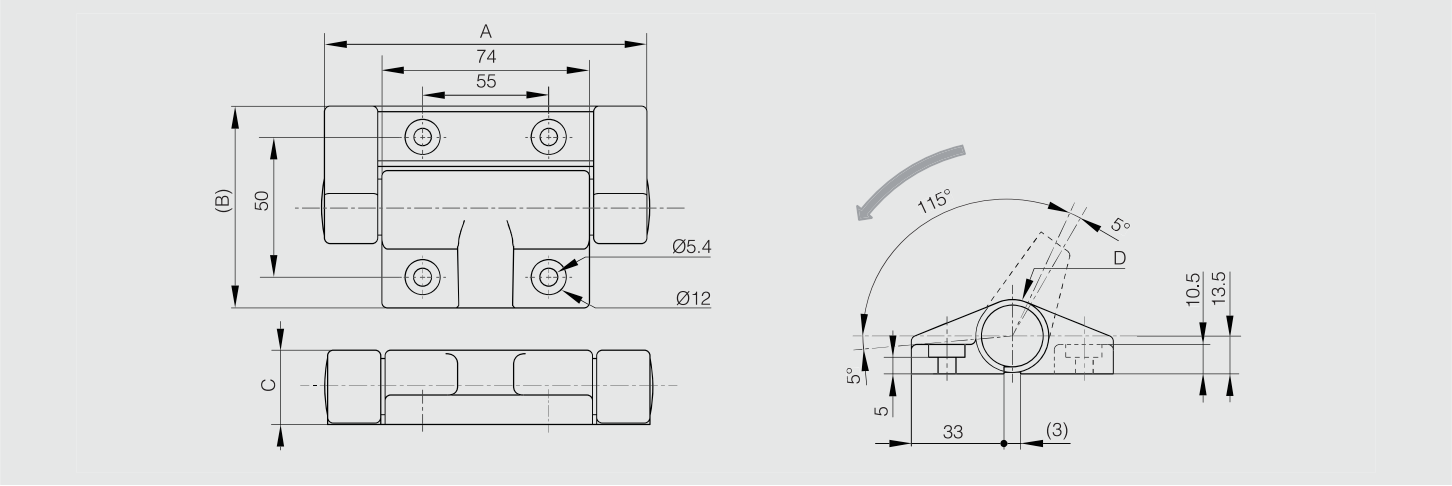

Damper working direction when opening the hinge

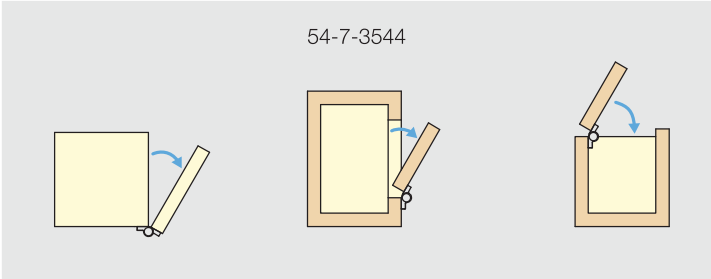

Damper working direction when closing the hinge

Soft-close dampening lift-off hinge

NEW

115° POLYMER RoHS

- Soft close dampening lift-off hinges: soft-close damper keeps lid from slamming shut.
- Sold in pairs (type 1 and type 2).
- Lift-off hinge type 1 has a grey shaft and the damper working direction is clockwise.
- Lift-off hinge type 2 has a white shaft and the damper working direction is counter-clockwise (shown on the drawing).
- Operating angle: 115°.
- If the opening angle is wider than 115° (+/- 5°), mechanism is broken and damper doesn't work any longer.
- **Provide a door stopper to prevent from overturning beyond the prescribed angle range.**
- Do not force the door to close faster in damper effective direction. It can cause damage to the product.
- When the door opening angle is small, the dampers may not work smoothly.
- Torque moment (pair):
• 3 to 5 N.m for part number 12-7-4280.
• 5 to 7 N.m for part number 12-7-4241.
- Torque calculation:
Torque (N.m) = L (m) x 1/2 x W (kg) x 9.8 with:
• L = door height in metre.
• W = door weight in kilo.
- Operating temperature: 0 to +40°C.

	Part number	Material	Finish	A	B	C	D	Torque	Note	Weight (g)
NEW	12-7-4280	polymer	dark grey	75	80	26.5	26	3 - 5 N.m / pair	sold in pairs	180
	12-7-4241	polymer	dark grey	75	60	26.5	26	5 - 7 N.m / pair	sold in pairs	180

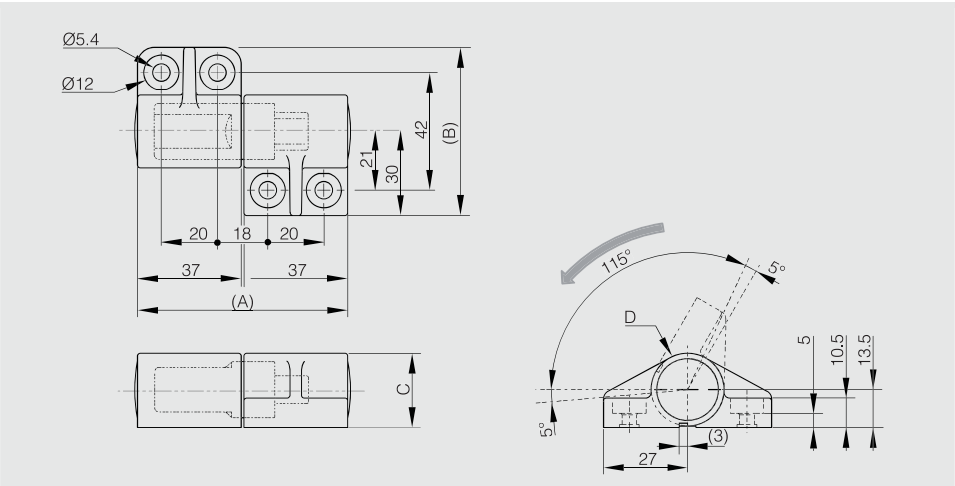

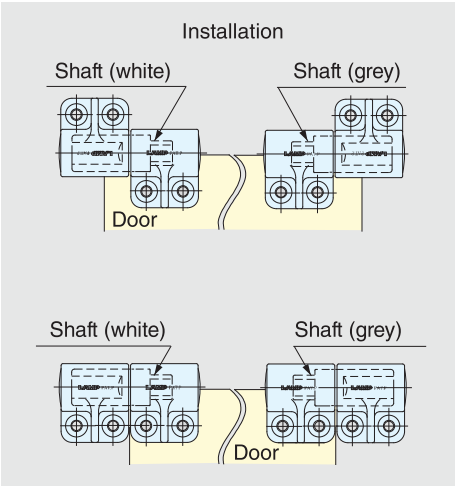

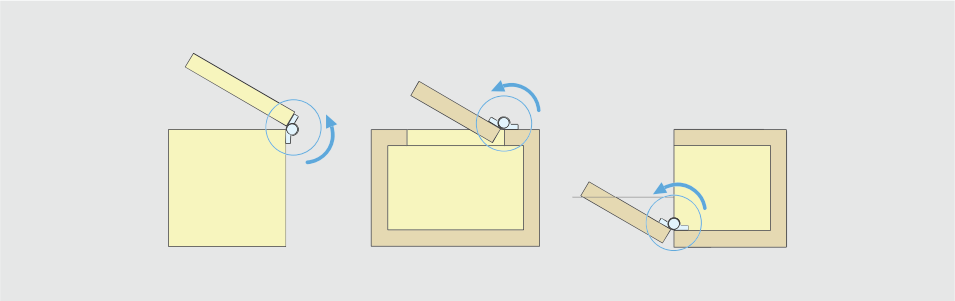

Small friction hinges - adjustable

180° ALU RoHS

Small size friction hinge to maintain a lid / door in position.
The friction torque is adjustable with a hex key.
2 other versions available: with spring or with detent function.

Part number	Material	Finish	A	B	C	D	S	Torque	Weight (g)
72-1-4136	6060 T5 alu	raw	30	35	3.3	8	3.5	0 - 1 N.m	11
72-1-4160	6060 T5 alu	clear anodised	30	35	3.3	8	3.5	0 - 1 N.m	11
72-1-4137	6060 T5 alu	black anodised	30	35	3.3	8	3.5	0 - 1 N.m	11

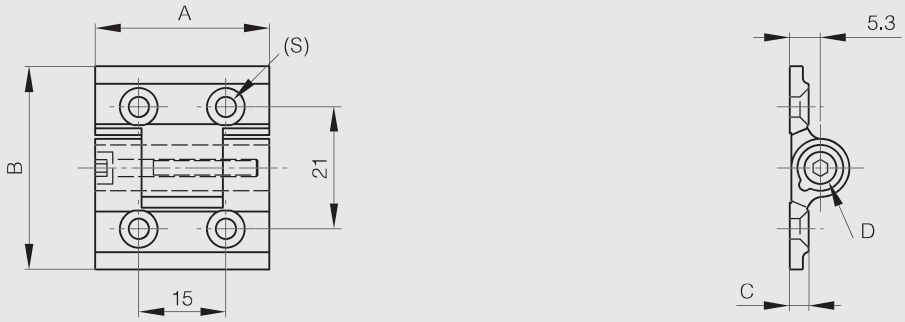

Large friction hinges - adjustable

NEW

180° ALU RoHS

Large size friction hinge to maintain a lid / door in position.
The friction torque is adjustable with a hex key.
Available with a choice of studs or holes.
3 other versions available: with spring, with detent function or free swinging.

	Part number	Material	Finish	A	B	C	D	Torque	Note	Weight (g)
	72-1-4145	6060 T5 alu	clear anodised	65	55	4.5	13	0 - 5 N.m	fixing by screw CHC M6	68
	72-1-4146	6060 T5 alu	black anodised	65	55	4.5	13	0 - 5 N.m	fixing by screw CHC M6	68
	72-1-4147	6060 T5 alu	clear anodised	65	55	4.5	13	0 - 5 N.m	fixing by M6 studs	85
	72-1-4148	6060 T5 alu	black anodised	65	55	4.5	13	0 - 5 N.m	fixing by M6 studs	85
NS	72-1-4362	6060 T5 alu	blue anodised	65	55	4.5	13	0 - 5 N.m	fixing by screw CHC M6	66
NS	72-1-4363	6060 T5 alu	red anodised	65	55	4.5	13	0 - 5 N.m	fixing by screw CHC M6	66
NS	72-1-4364	6060 T5 alu	bronze anodised	65	55	4.5	13	0 - 5 N.m	fixing by screw CHC M6	66
NS	72-1-4365	6060 T5 alu	gold anodised	65	55	4.5	13	0 - 5 N.m	fixing by screw CHC M6	66

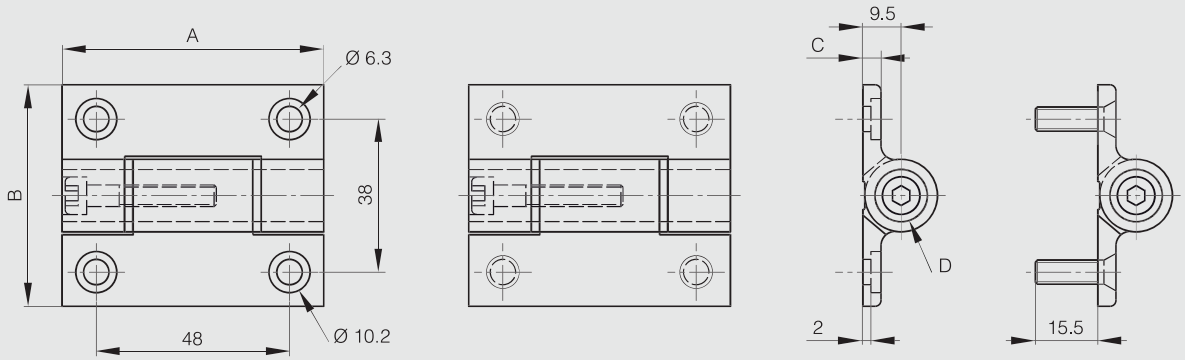

Hinges with or without friction in stainless steel - friction torque 3 N.m

NEW

180° STAINLESS STEEL RoHS

Constant torque. Stable at various temperatures. (from -40°C to +80°C)
Pin in stainless steel.
Plugs in polyethylene.

	Part number	Material	Finish	A	B	C	D	Torque	Pin material	Note	Weight (g)
NEW	62-1-3719	301 stainless steel	raw	85	55	2	8	3 N.m	stainless steel	with friction	121
	62-1-3711	304 stainless steel	raw	85	55	2	8		304 stainless steel	no torque	122

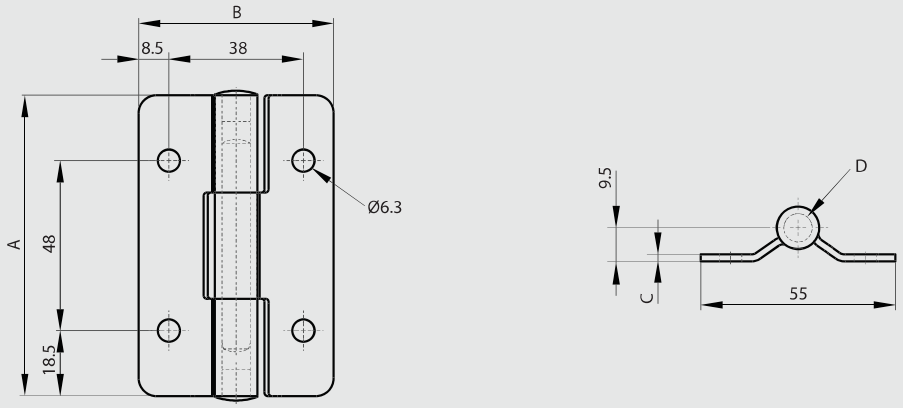

Hinges with or without friction in stainless steel - friction torque 4.5 N.m

NEW

180° STAINLESS STEEL RoHS

Constant torque. Stable at various temperature (from -40°C to +80°C)
Pin in stainless steel.
Plugs in polyethylene.

	Part number	Material	Finish	A	B	C	D	Torque	Pin material	Note	Weight (g)
NEW	62-1-3747	301 stainless steel	raw	115	55	2	8	4.5 N.m	stainless steel	with friction	170
NEW	62-1-3748	304 stainless steel	raw	115	55	2	8		304 stainless steel	no torque	170

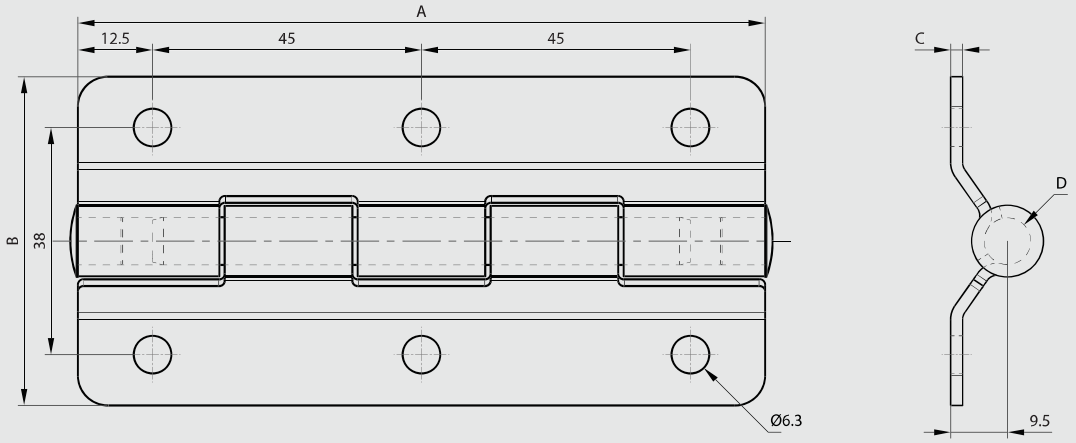

Hinges with or without friction in stainless steel - friction torque 5 N.m

NEW

180° STAINLESS STEEL RoHS

Constant torque. Stable at various temperatures (from -40° to 80°C).
Pin in stainless steel.
Plugs in polyethylene.

	Part number	Material	Finish	A	B	C	D	Torque	Pin material	Note	Weight (g)
NEW	62-1-3720	301 stainless steel	raw	85	55	2	12	5 N.m	stainless steel	with friction	155
	62-1-3713	304 stainless steel	raw	85	55	2	12		304 stainless steel	no torque	161

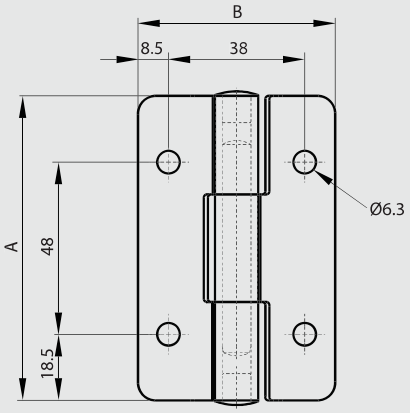

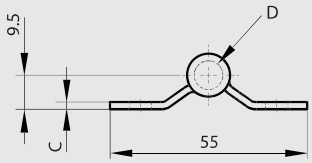

Hinges with or without friction in stainless steel - friction torque 8 N.m

NEW

180° STAINLESS STEEL RoHS

Constant torque. Stable at various temperatures (from -40°C to +80°C).
Pin in stainless steel.
Plugs in polyethylene.

	Part number	Material	Finish	A	B	C	D	Torque	Pin material	Note	Weight (g)
NEW	62-1-3732	301 stainless steel	raw	85	65	3	12	8 N.m	stainless steel	with friction	230
NEW	62-1-3733	304 stainless steel	raw	85	65	3	12		304 stainless steel	no torque	230

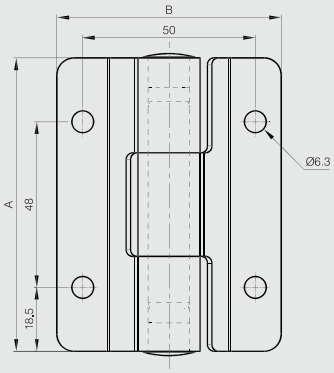

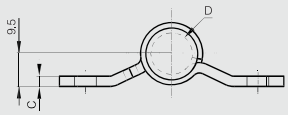

Stainless steel torque hinge 2 N.m

NEW

270° STAINLESS STEEL RoHS

A combination of plastic and metal is used for friction to prevent metallic dust.
For vertical and horizontal applications.
Cycle life: 20,000 cycles.
Operating temperature: -10°C / +40°C
Torque 2 N.m+/-25%
Produced mainly in stainless steel, for a complete description of the materials contact us.

	Part number	Material	Finish	A	B	C	Torque	Weight (g)
NEW	52-7-4136	stainless steel 304	polished	50	50	12	2 N.m	60

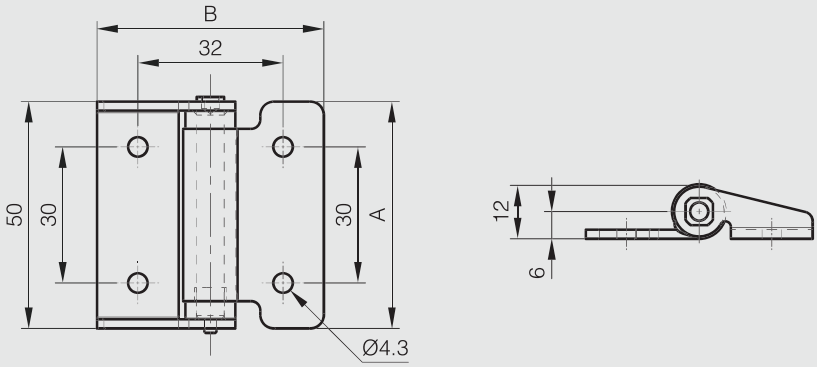

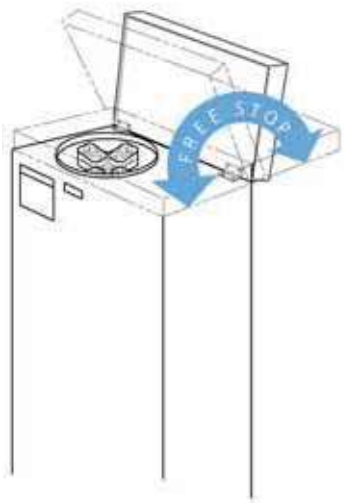

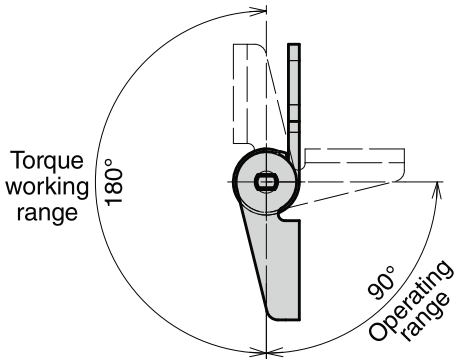

Lift-off torque hinges

NEW

180° STAINLESS STEEL RoHS

For vertical or horizontal applications.
Cycle life: 30,000 cycles.
14-7-3907 and 14-7-3906: torque 0.3 N.m +/- 67%
14-7-3904 and 14-7-3905: torque 1.6 N.m +/- 20%
Produced mainly in stainless steel, for a complete description of the materials contact us.

	Part number	Material	Finish	A	B	C	D	E	F	G	S	Torque	Note	Weight (g)
NEW	14-7-3906	304 stainless steel	polished	50	35	2	10	25	5	30	4.5	0.3 N.m	Type 1	42
NEW	14-7-3907	304 stainless steel	polished	50	35	2	10	25	5	30	4.5	0.3 N.m	Type 2	42
NEW	14-7-3904	304 stainless steel	polished	75	50	2	12	32	6	50	4.5	1.6 N.m	Type 1	96
NEW	14-7-3905	304 stainless steel	polished	75	50	2	12	32	6	50	4.5	1.6 N.m	Type 2	96

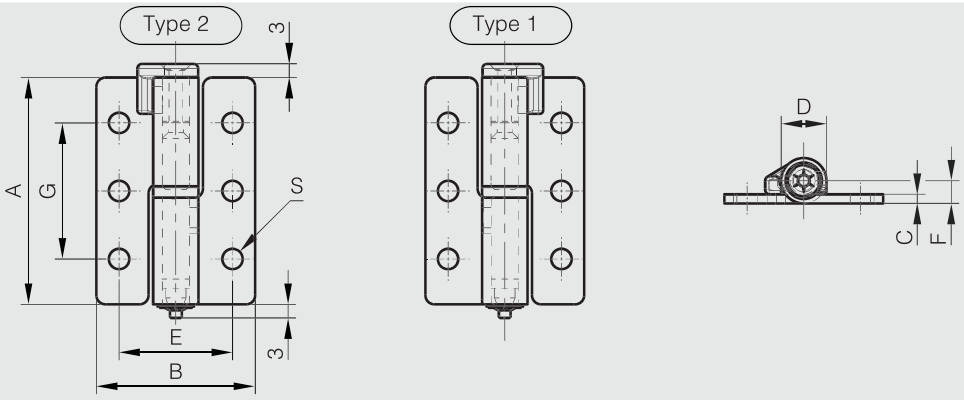

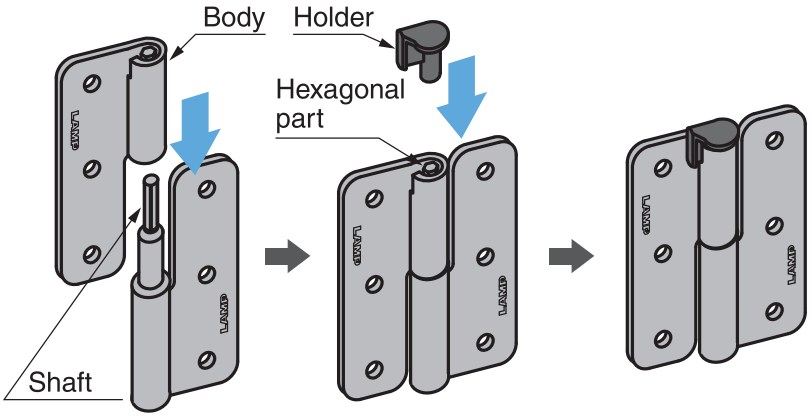

Insert the body into axis, and then insert the holder into the hexagonal part of axis to generate torque.
To detach, use a tool to push the holder out.

One way torque hinge - constant torque 9 N.m / set

- Aluminium torque hinge.
- Friction in one direction only: allows for frictionless handling of the door inthe opposite direction.
- Tested over 30,000 cycles.
- Torque is constant in torque direction.
- Sold in pairs (left / right).
- Ideal to prevent shock to the door and / or safety.
- Torque moment (per set): 9 N.m.
- Initial torque may vary from -20% to +40%.
- Not suited for vibration environment.
- Torque will be affected by temperature.
- Do not lubricate.
- For indoor use only.
- Body in aluminium, shaft in stainless steel, sleeve and cover in polyacetal (POM).

Part number	Material	Finish	A	B	C	D	Torque	Note	Weight (g)
72-7-4250	aluminium	anodised	77.5	60	16	21	9 N.m / set	torque in the clockwise direction sold in pairs	271
72-7-4251	aluminium	anodised	77.5	60	16	21	9 N.m / set	torque in the anti clockwise direction sold in pairs	270

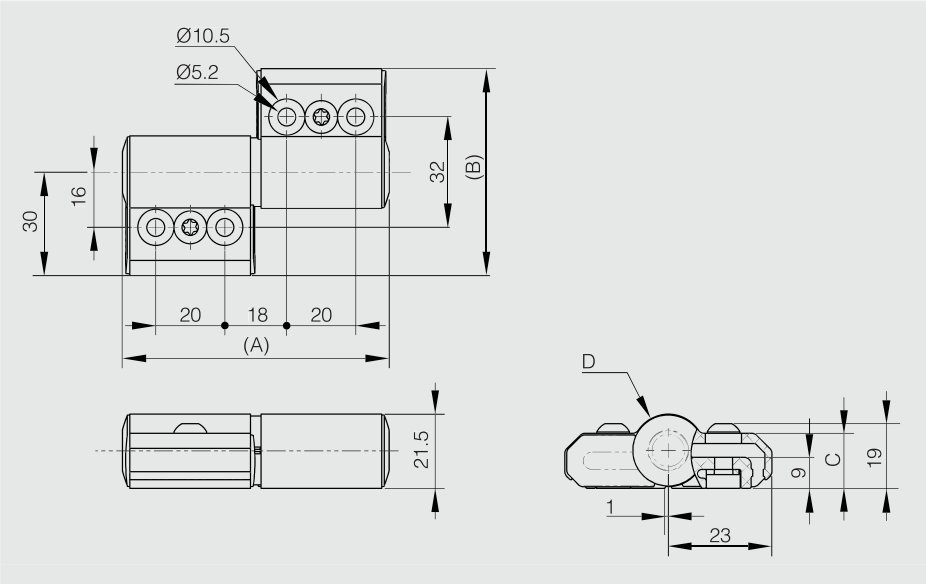

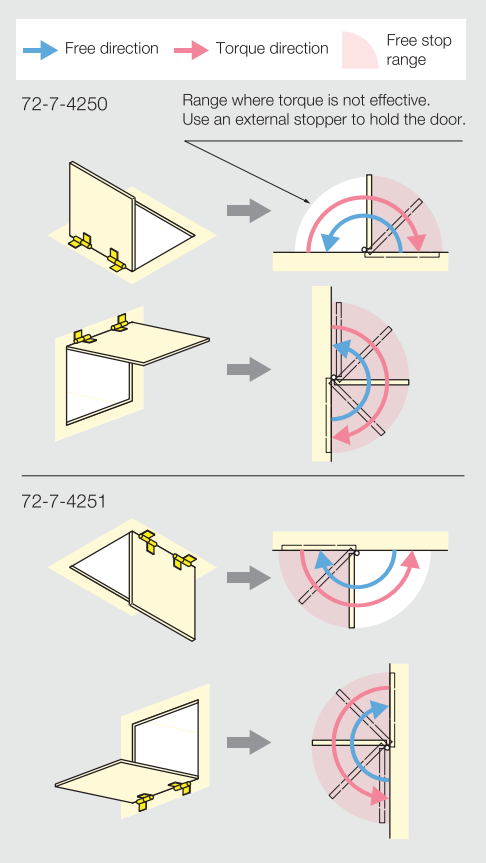

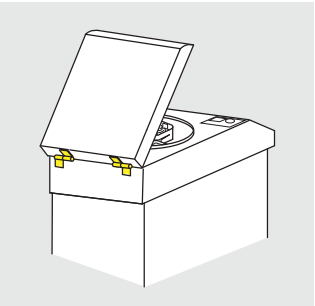

Installation

Dual axis torque hinge - 30 x 60 mm

- Dual axis: free stop at any angle in tilt & swivel.
- Provide torque stability in both directions.
- Torque per piece (tilting): 2.9 N.m.
- Torque per piece (swiveling): 1.4 N.m.
- Suitable for monitor screens.
- Rotation upon axis X can occur from 0 ° to 180 °.
- Rotation upon axis Z can occur up to 360 °.

Produced mainly in stainless steel, for a complete description of the materials contact us.

Part number	Material	Finish	A	B	C	Torque	Weight (g)
70-7-3622	430 stainless steel	polished	30	60	51.5	2.9 N.m (axis X) 1.4 N.m (axis Z)	92

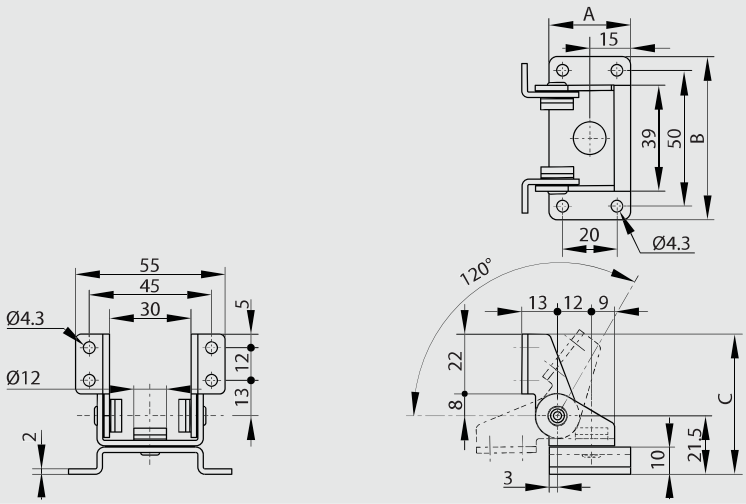

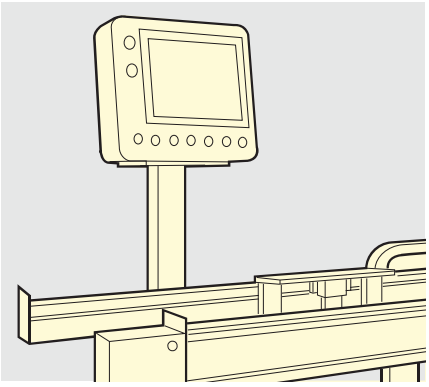

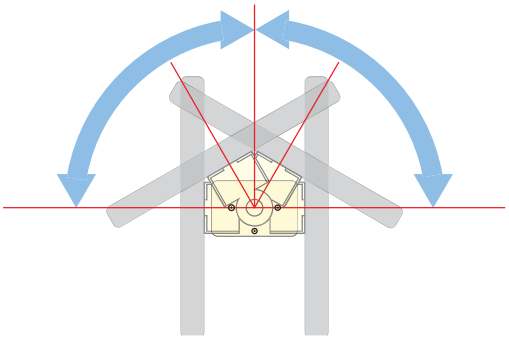

Swivel

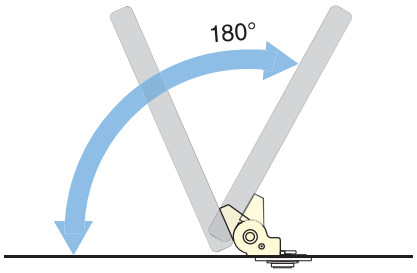

Tilt

Dual axis torque hinge - 50 x 76 mm

- Dual axis: free stop at any angle in tilt & swivel.
- Provide torque stability in both directions.
- Torque per piece (tilting): 7 N.m.
- Torque per piece (swiveling) 3 N.m.
- Suitable for monitor screens.
- Rotation upon axis X is free but can be blocked from 0° to 120° with a dditional pin.
-Rotation upon axis Z is free but can be blocked at 30° or 90° with additional pins (various holes in the fixing plate).
-Electric cables can go through a hole in the middle of the flixing plate.

Produced mainly in stainless steel, for a complete description of the materials contact us.

Part number	Material	Finish	A	B	Torque	Weight (g)
70-7-3621	430 stainless steel	polished	50	76	7 N.m (axis X) 3 N.m (axis Z)	232

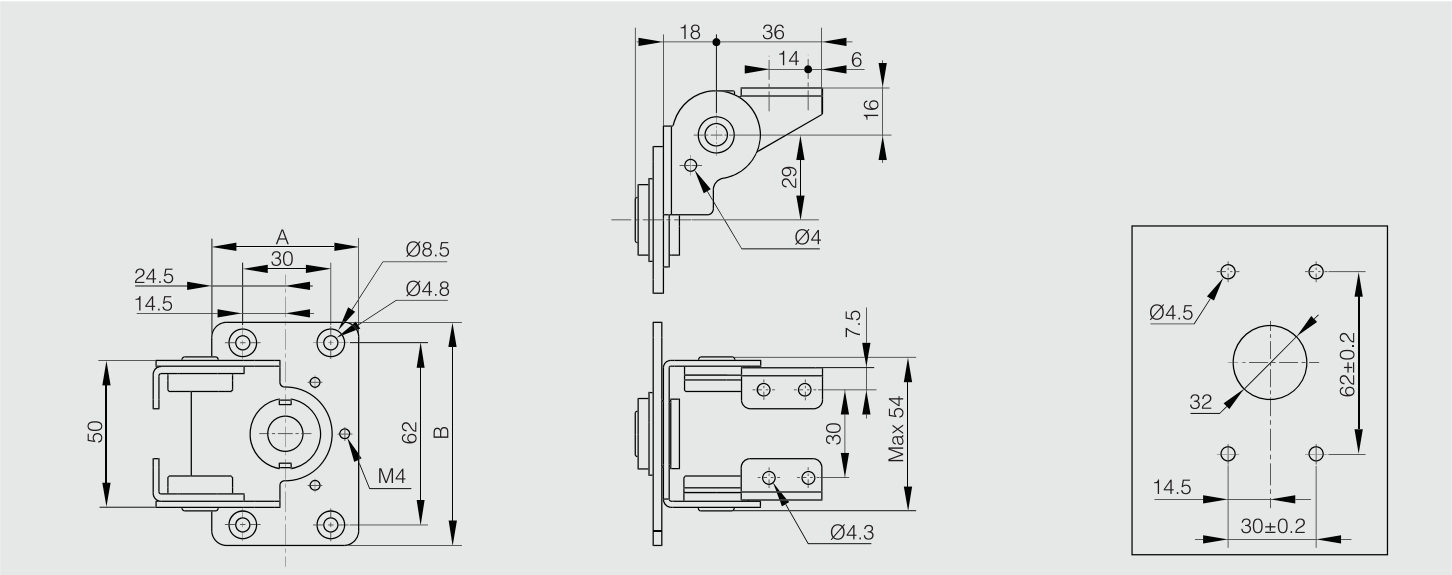

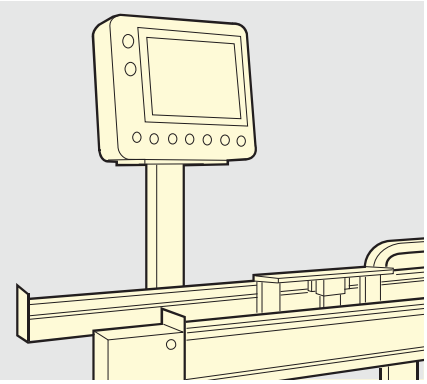

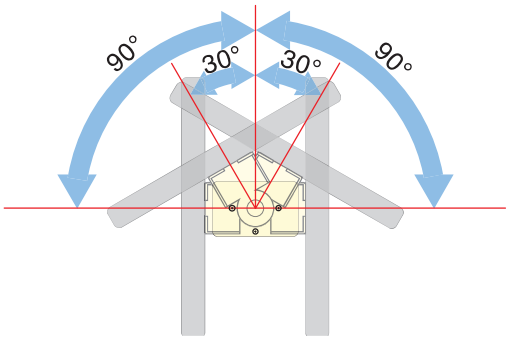

Swivel

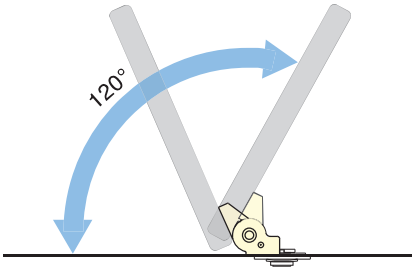

Tilt

Torque hinge A

NEW

180° STAINLESS STEEL RoHS

Provides torque stability in both directions.
For pair using: please use the same torque in both hinges.
When installing, ensure that both hinge axis are aligned.
Cycle life: 20,000 cycles.
Operating temperature: 0°C - 40°C.
For horizontal applications.

	Part number	Material	Finish	A	B	C	Torque	Note	Weight (g)
NEW	15-7-3578	430 stainless steel	polished	66	16.5	2	2.0 N.m	Type 1	30
NEW	15-7-3579	430 stainless steel	polished	66	16.5	2	2.0 N.m	Type 2	30
NEW	15-7-3580	430 stainless steel	polished	66	16.5	2	3.0 N.m	Type 1	30
NEW	15-7-3581	430 stainless steel	polished	66	16.5	2	3.0 N.m	Type 1	30
NEW	15-7-3582	430 stainless steel	polished	80	18.5	2	4.5 N.m	Type 1	65
NEW	15-7-3583	430 stainless steel	polished	80	18.5	2	4.5 N.m	Type 2	65

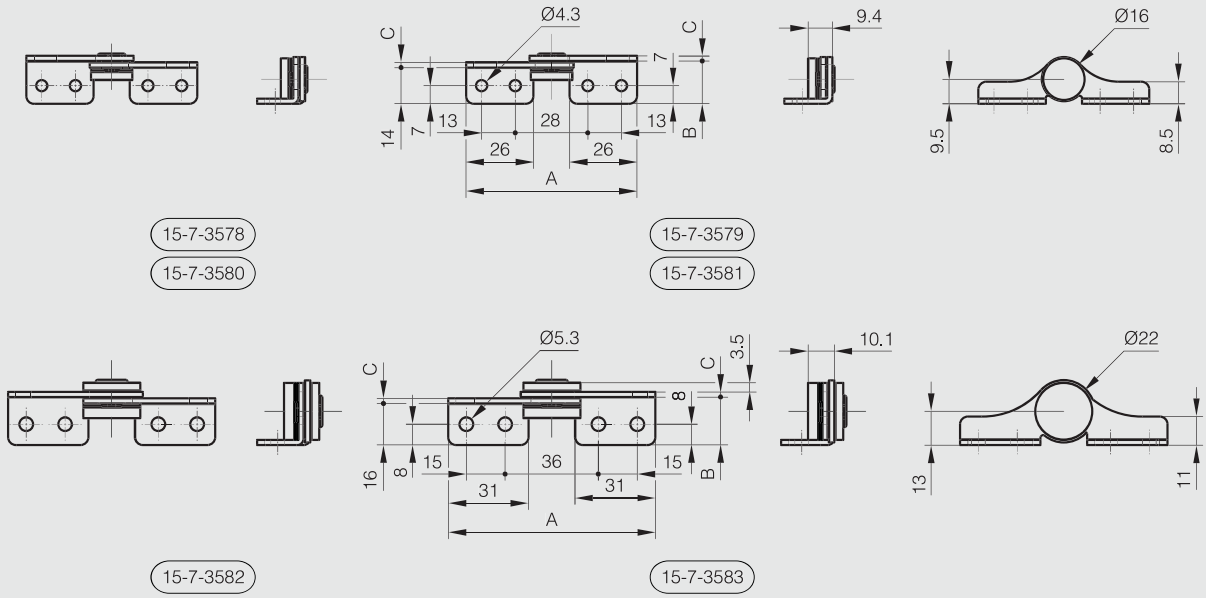

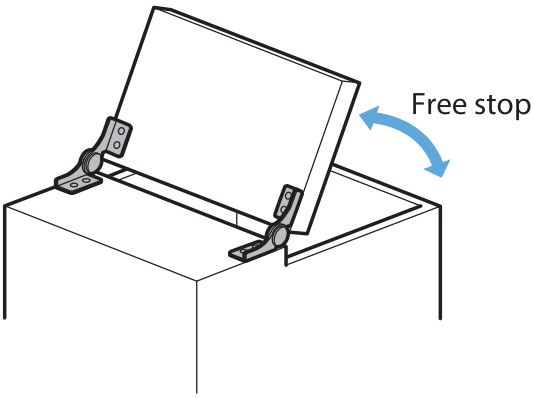

Torque hinge B

NEW

180° STAINLESS STEEL RoHS

Provides torque stability in both directions.
For pair using: Please use the same torque in both hinges.
When installing, ensure that both hinge axis are aligned.
Can not be used around water because not all parts are made of stainless steel.
Cycle life: 20,000 cycles.
Operating temperature: 0°C - 40°C.

	Part number	Material	Finish	A	B	C	Torque	Note	Weight (g)
NEW	15-7-3574	430 stainless steel	polished	43	33	2.5	0.7 N.m	Type 1	31
NEW	15-7-3575	430 stainless steel	polished	43	33	2.5	0.7 N.m	Type 2	31
NEW	15-7-3576	430 stainless steel	polished	43	33	2.5	2.0 N.m	Type 1	32
NEW	15-7-3577	430 stainless steel	polished	43	33	2.5	2.0 N.m	Type 2	32
NEW	15-7-3562	430 stainless steel	polished	43	33	2.5	3.0 N.m	Type 1	32
NEW	15-7-3563	430 stainless steel	polished	43	33	2.5	3.0 N.m	Type 2	32
NEW	15-7-3564	430 stainless steel	polished	48	40	3	4.5 N.m	Type 1	67
NEW	15-7-3565	430 stainless steel	polished	48	40	3	4.5 N.m	Type 2	67

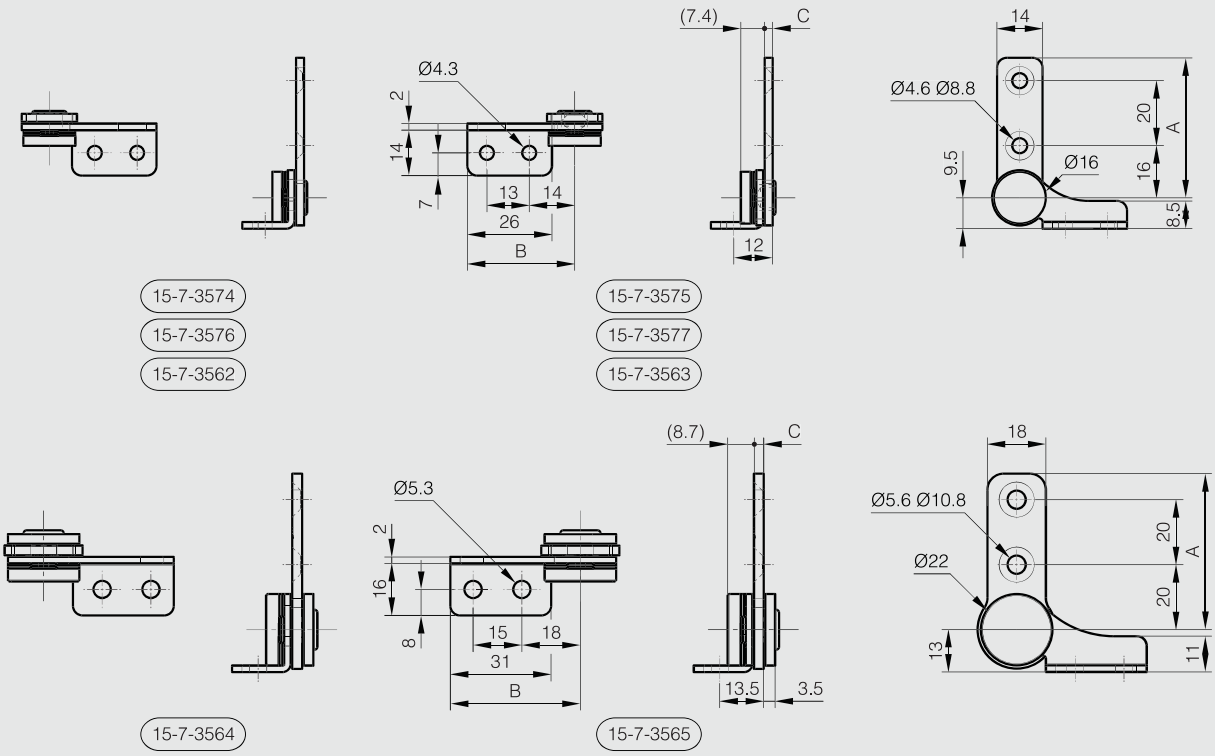

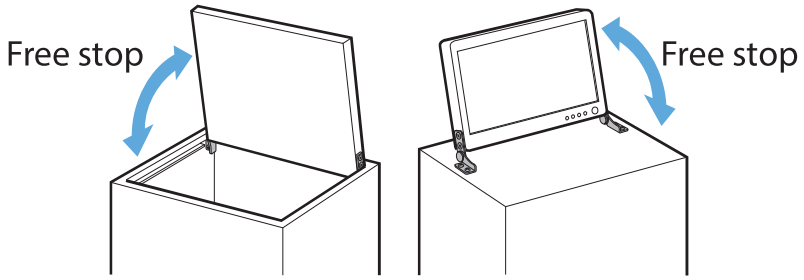

Swivel torque hinge - torque 2 N.m

Rotation angle: 360°.
Friction torque: 2 N.m.
For indoor applications (industrial control panels and monitors).

Part number	Material	Finish	A	B	Torque	Weight (g)
70-7-3636	430 stainless steel	polished	56	56	2 N.m	50

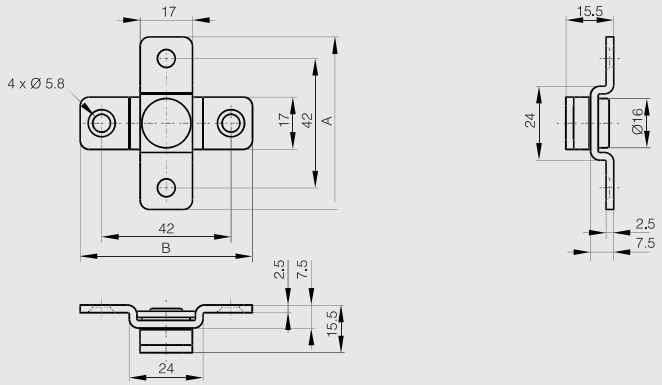

Swivel torque hinge with hole diameter 21.5 mm - 5 N.m

Rotation angle: 360°.
Friction torque: 3 or 5 N.m.
Center hole for easy cable management.
For indoor applications (industrial control panels and monitors).
Produced mainly in stainless steel, for a complete description of the materials contact us.

	Part number	Material	Finish	A	B	Torque	Weight (g)
	70-7-3637	430 stainless steel	polished	60	25	5 N.m	174
NEW	70-7-3661	430 stainless steel	polished	60	25	3 N.m	174

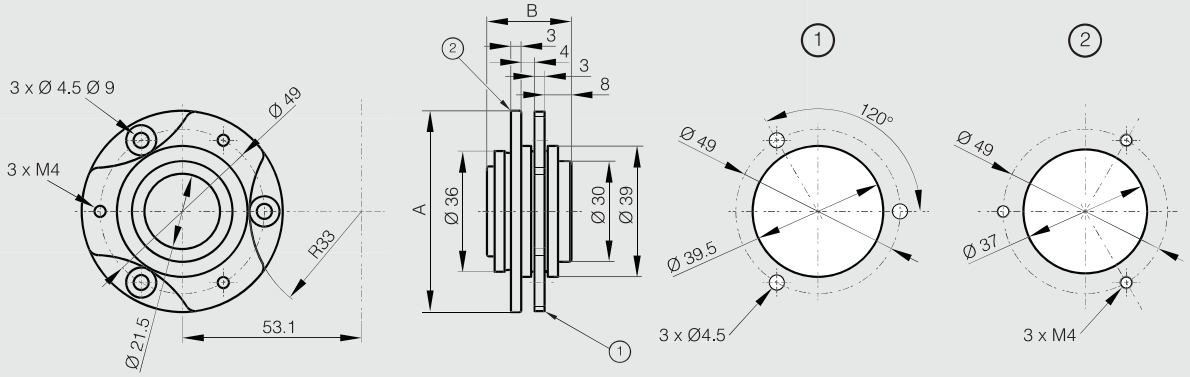

Swivel torque hinge with hole diameter 34 mm - torque 7 N.m

Rotation angle: 360°.
Friction torque: 7 N.m.
Center hole for easy cable management.
For indoor applications (industrial control panels and monitors).
Produced mainly in stainless steel, for a complete description of the materials contact us.

Part number	Material	Finish	A	B	Torque	Weight (g)
70-7-3638	430 stainless steel	polished	87	20.5	7 N.m	282

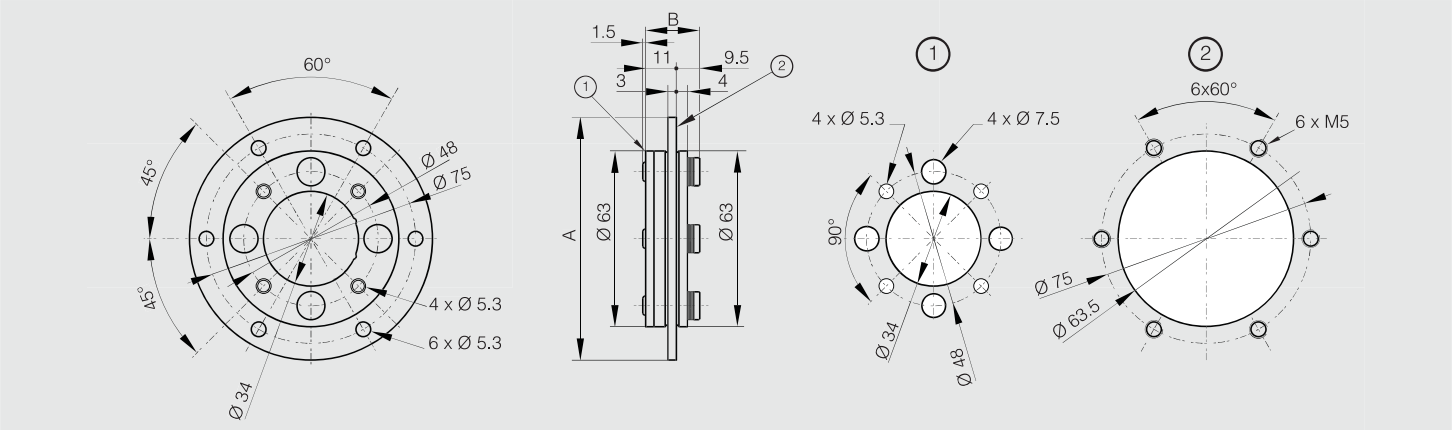

Mini torque hinges - torque 0.25 N.m

Passed 20,000 open/close test.
Pin in 304 stainless steel.

Part number	Material	Finish	A	B	C	D	F	G	S	Torque	Weight (g)
54-7-3547	POM	black	40	28	2.5	2	5	25	3.2	0.25 N.m	5
54-7-3548	POM	white	40	28	2.5	2	5	25	3.2	0.25 N.m	5

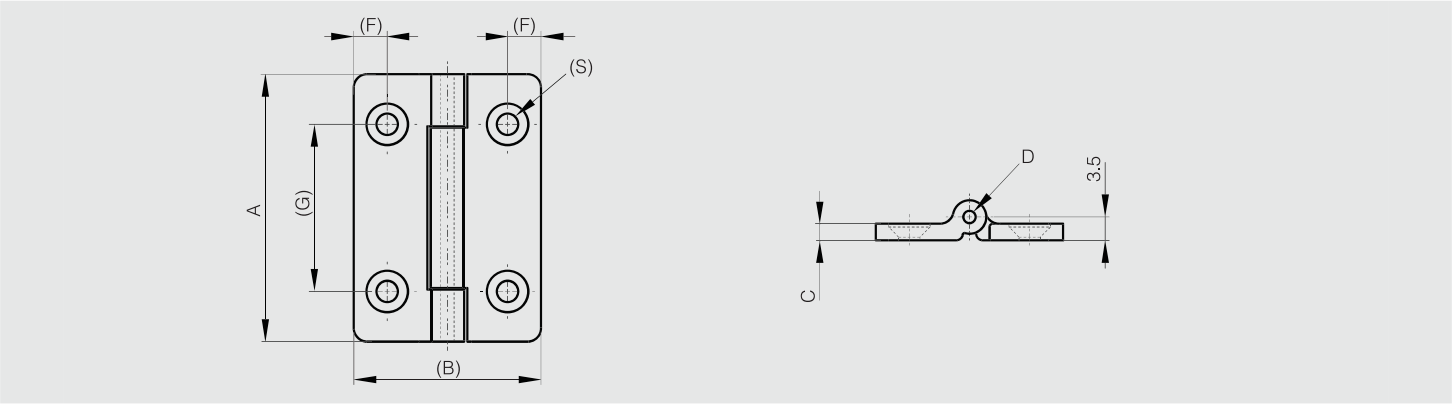

Hi-Klik™ detent hinges - small

270° ALU RoHS

Indented every 30°.
Torque is preset.
3 other versions available: free swinging, with spring or with friction mechanism.

Part number	Material	Finish	A	B	C	D	Torque	Weight (g)
72-1-4235	6060 T5 alu	clear anodised	30	35	3.3	8	0.4 N.m	10
72-1-4236	6060 T5 alu	black anodised	30	35	3.3	8	0.4 N.m	10

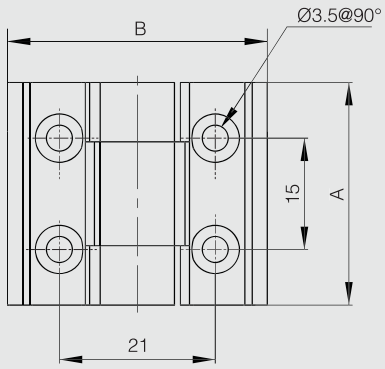

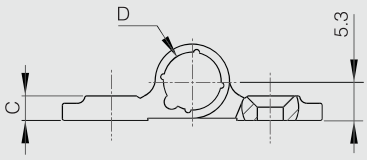

Hi-Klik™ detent hinges - large

270° ALU RoHS

Indented every 30°. 4 torque values.
Torque is preset.
3 other versions available: free swinging, with spring or with friction mechanism.

Part number	Material	Finish	A	B	C	D	Torque	Weight (g)
72-1-4197	6060 T5 alu	black anodised	67	55	4.5	13	1.8 N.m	106
72-1-4198	6060 T5 alu	black anodised	67	55	4.5	13	2.5 N.m	107
72-1-4225	6060 T5 alu	black anodised	67	55	4.5	13	3.2 N.m	107
72-1-4233	6060 T5 alu	black anodised	67	55	4.5	13	5 N.m	107

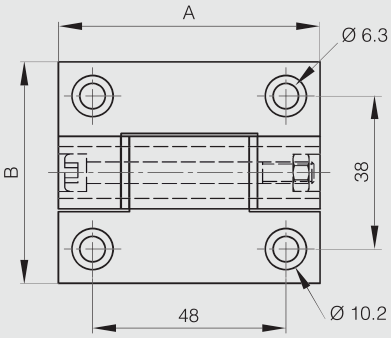

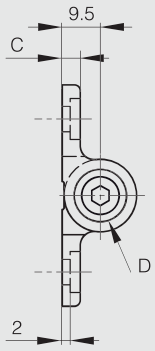

Detent plastic hinges

270° POLYMER RoHS

Holds door leaves in 4 different positions (90° each).
Maximum door weight: 1.2 kg/pair.
303 stainless steel pin.

Part number	Material	Finish	A	B	Torque	Weight (g)
54-7-3509	polyacetal	ivory	50	60	0.49 N.m	32
54-7-3510	polyacetal	black	50	60	0.49 N.m	32

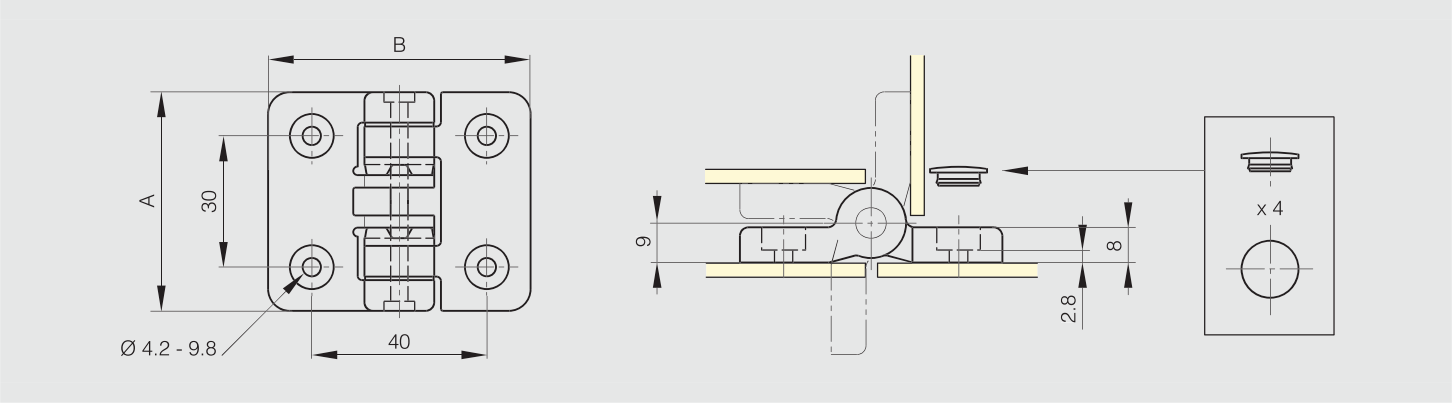

Hinge with stop at 115°

115° STAINLESS STEEL RoHS

Produced mainly in stainless steel, for a complete description of the materials contact us.

Part number	Material	Finish	A	B	C	Weight (g)
52-7-3960	304 stainless steel	polished	40	105	3	122

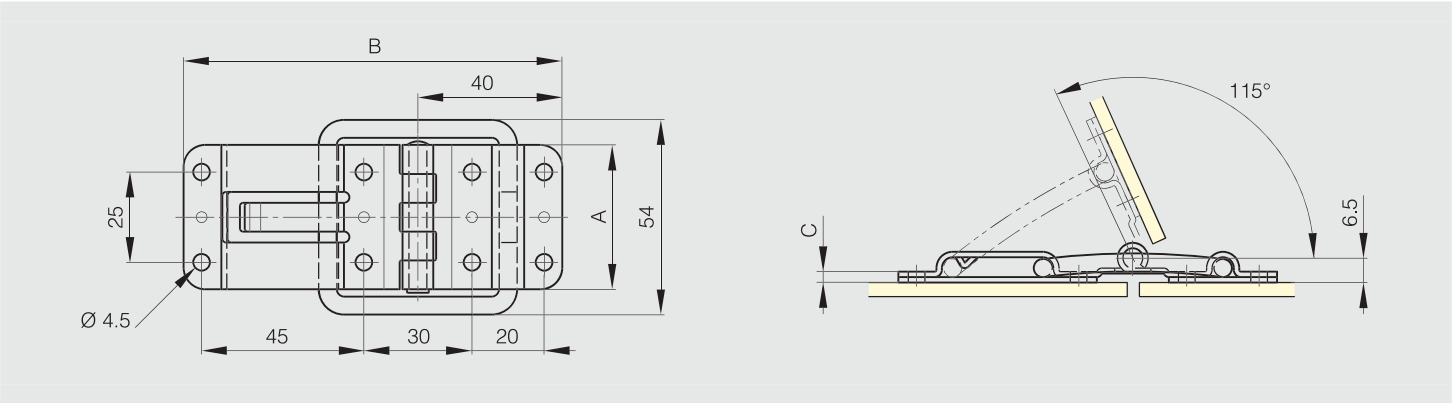

Multi angle locking hinge A with lever

NEW

180° STEEL RoHS

Easily adjusts the flap angle by toggling the lever.
Lock allows the hinge to be held in position from 0° to 180° in 10° increments.
The flap is temporarily unlocked while the lever is pushed.
The flap stays unlocked when the lever is lifted.
Hinge can be used with free axis hinge A (15-7-3568 or 15-7-3569).
Lever, pin, cover: plastic.
Recommended screws: M5.
Unlocking torque: 45 N.m.

	Part number	Material	Finish	A	B	C	Note	Weight (g)
NEW	15-7-3566	steel	nickel plated	94.5	30	4	Type 1	351
NEW	15-7-3567	steel	nickel plated	94.5	30	4	Type 2	351

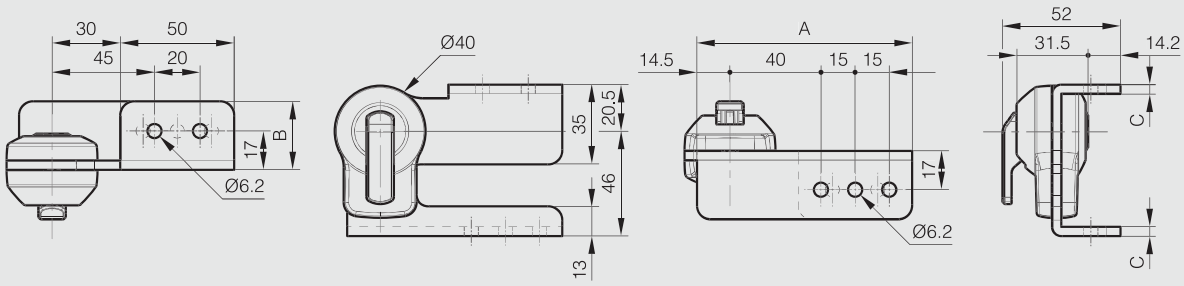

15-7-3566

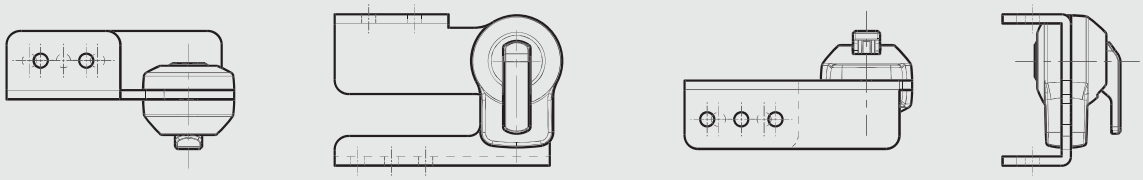

15-7-3567

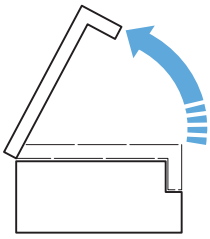

Holds in position
at angles in 10° increments

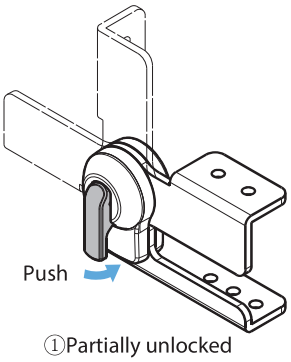

①Partially unlocked

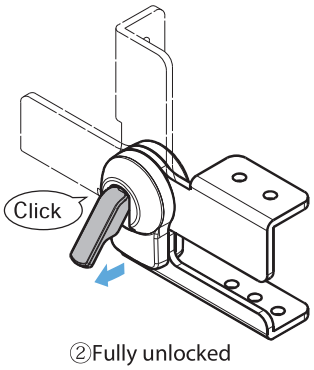

②Fully unlocked

Free axis hinge A

NEW

180° STEEL RoHS

Free axis hinge recommended to be associated with the Multi angle locking hinge with lever A (15-7-3566 or 15-7-3567).

Recommended screws: M5.

	Part number	Material	Finish	A	B	C	Note	Weight (g)
NEW	15-7-3568	steel	nickel plated	94.5	30	4	Type 1	351
NEW	15-7-3569	steel	nickel plated	94.5	30	4	Type 2	351

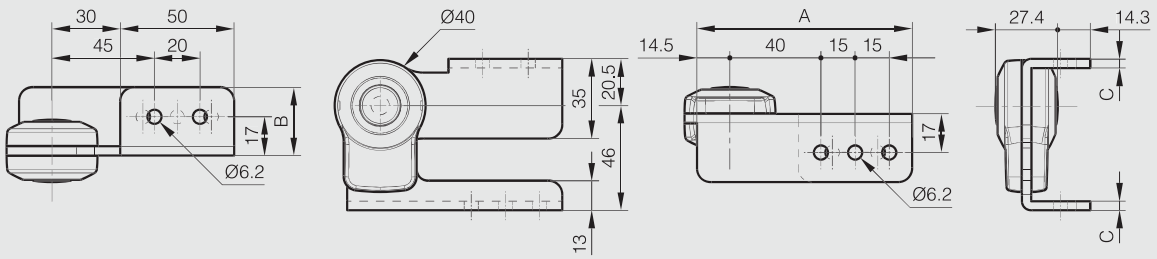

15-7-3568

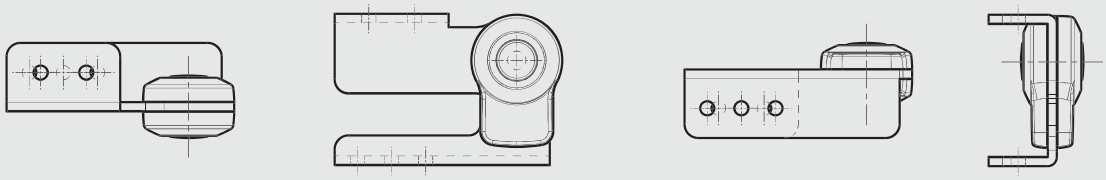

15-7-3569

Multi angle locking hinge B with lever

NEW

180° STEEL RoHS

Easily adjusts the flap angle by toggling the lever.
Lock allows the hinge to be held in position from 0° to 180° in 10° increments.
The flap is temporarily unlocked while the lever is pushed.
The flap stays unlocked when the lever is lifted.
Hinge can be used with free axis hinge B (15-7-3572 or 15-7-3573).
Lever, pin, cover: plastic.
Recommended screws: M5.
Unlocking torque 45 N.m.

	Part number	Material	Finish	A	B	C	Note	Weight (g)
NEW	15-7-3570	steel	nickel plated	94.5	30	4	Type 1	305
NEW	15-7-3571	steel	nickel plated	94.5	30	4	Type 2	305

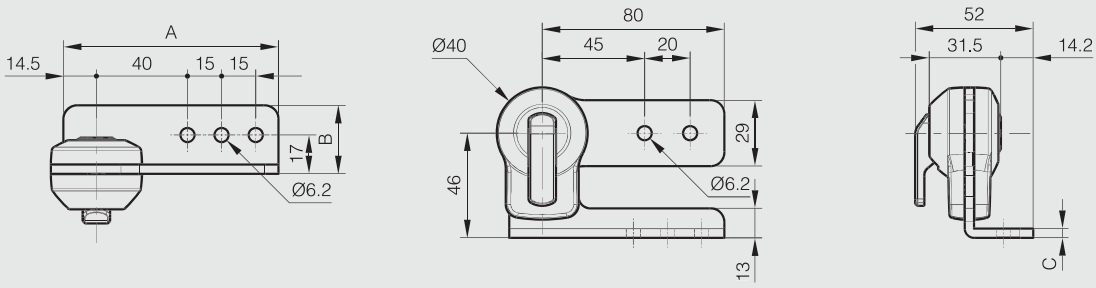

15-7-3570

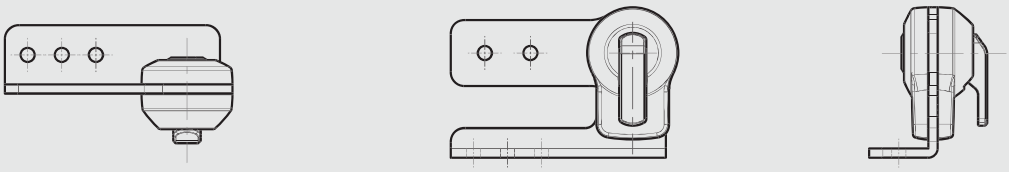

15-7-3571

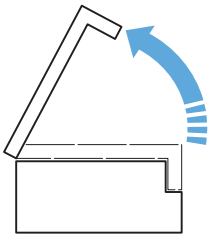

Holds in position
at angles in 10° increments

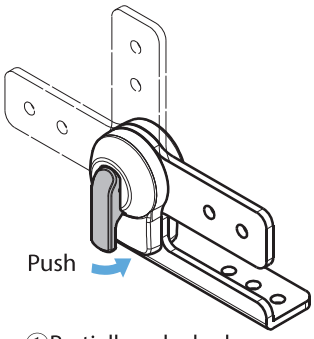

①Partially unlocked

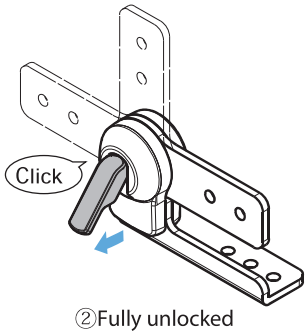

②Fully unlocked

Free axis hinge B

NEW

180° STEEL RoHS

Free axis hinge recommended to be associated with the Multi angle locking hinge with lever B (15-7-3570 or 15-7-3571).

Recommended screws: M5.

	Part number	Material	Finish	A	B	C	Note	Weight (g)
NEW	15-7-3572	steel	nickel	94.5	30	4	Type 1	305
NEW	15-7-3573	steel	nickel plated	94.5	30	4	Type 2	305

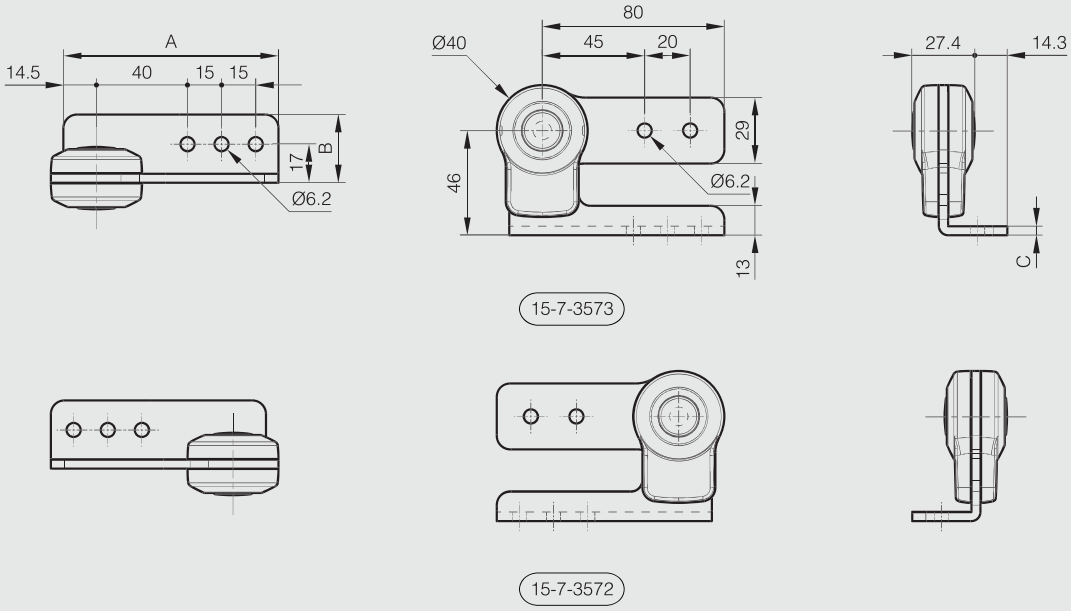

Hinge with stop at 60°

210° STAINLESS STEEL RoHS

Suitable for mounting on glass doors.
For horizontal application.

Part number	Material	Finish	A	B	C	D	Weight (g)
52-1-3840	304 stainless steel	brightened	35	133	2.5	6	140

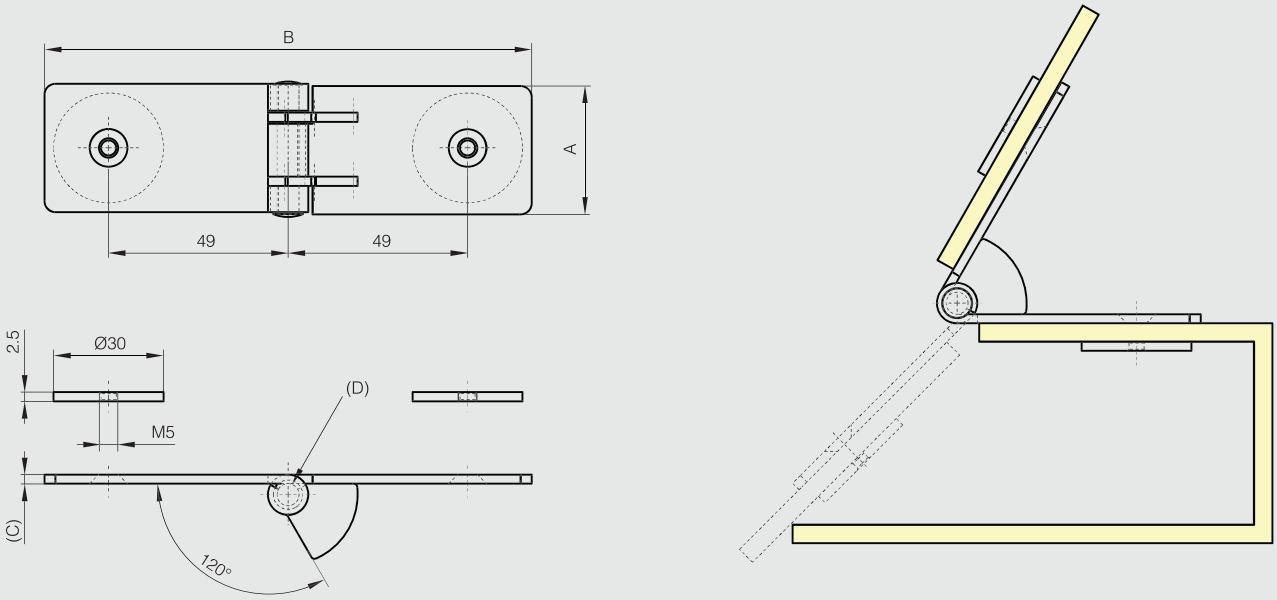

Hinge with integrated stop at 60°

NEW

180° STAINLESS STEEL RoHS

	Part number	Material	Finish	A	B	C	D	E	F	G	S	Weight (g)
NEW	52-1-4135	316 stainless steel	raw	50	50	2.5	6	5.5	34	34	5.5	70

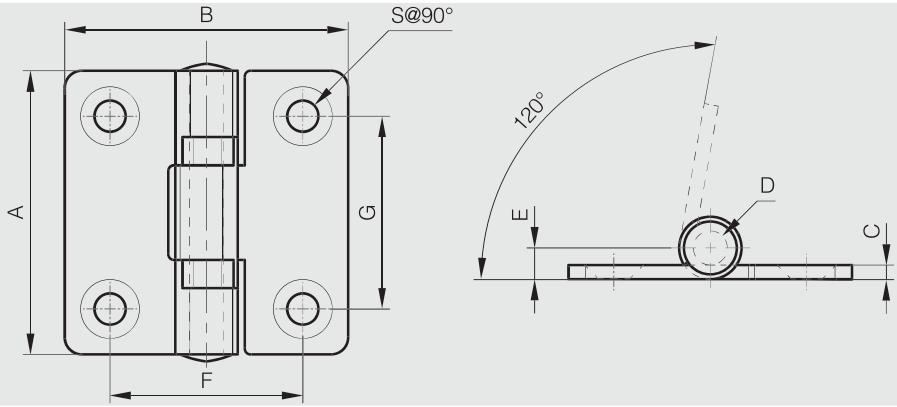

Compression latching hinges

180° POLYMER RoHS

Latching hinge that may be used as hinge or latch according to need.
Allows you to open door as left- or right hinged door, or to remove door completely. Universal left- and right assembly.
Available with a built-in safety catch for safe opening of pressurized doors. In addition to the 3 mm compression that always applies, the latching hinge can easily be adjusted between offset 0 mm, 1.5 mm or 3 mm to put more pressure on the gasket and ensure a tight and sealed door.
Door part mounts on a mounting bracket (included) which stabilize the door in the latching hinge area and provide further adjustability.
The latching hinge can be adjusted 3 mm in all three directions. Insert: recessed hexagon 8 mm, with open and close indication for insert position.

Frame part mounts with screws. Mounting bracket for the door mounts with Ø 4 mm blind rivets.

Note that a normal panel will need four units in order to operate as either left-open, right open, or completely removable.

No problems with thermal break as units are surface-mounted on to door and frame parts, resulting in no parts intruding through the double skinned doors.

Part number	Material	Finish	A	B	C	Note	Weight (g)
54-7-3549	polyamide	black	85	91	30.5	with built-in safety catch	102
54-7-3550	polyamide	black	85	91	30.5	without safety catch	96

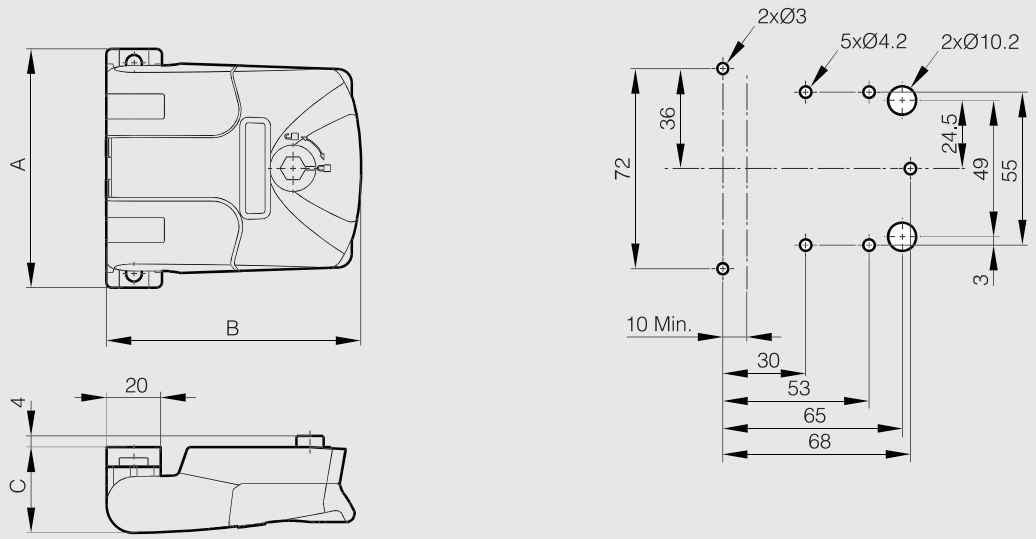

Hinge for insulated door

Hinge designed for use on insulated doors in HVAC units.
With door in open position, the smart quick-release function allows for complete door removal and door attachment, without the need for any tool.

Universal right and left mounting with 180° opening angle. Surface mounted on frame and door with rivets or screws.

Door side in PA6, frame side in black zamak, pin in 303 stainless steel.

Part number	Material	Finish	A	B	C	Weight (g)
54-7-3545	polyamide and zinc die-cast	black	90	74.5	32	140

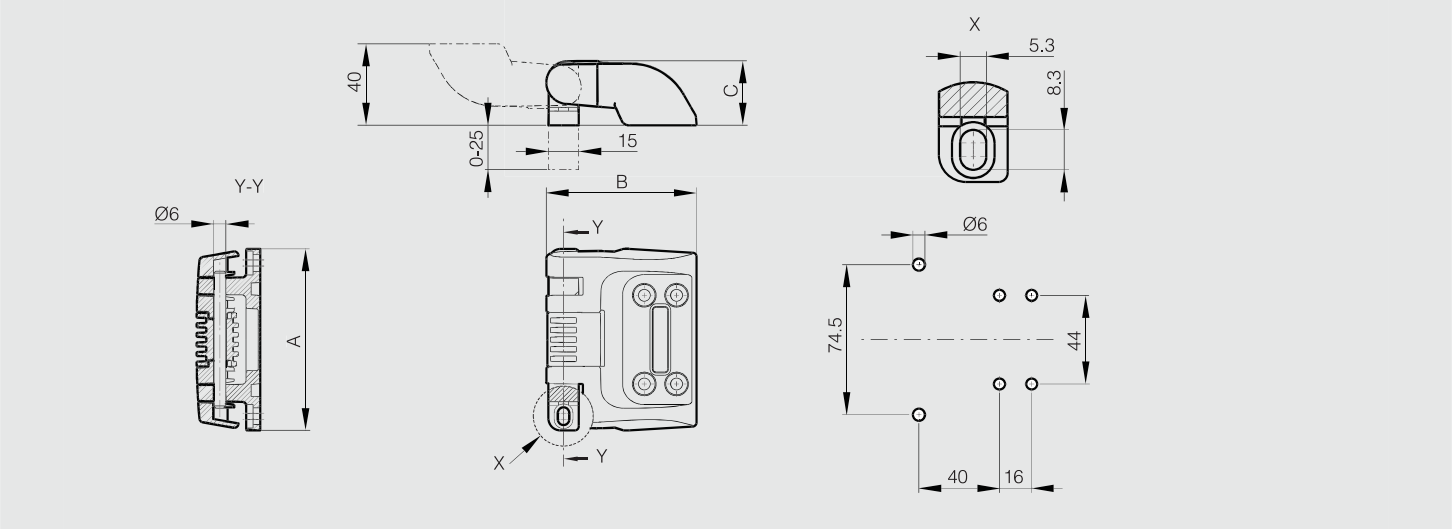

Forged hinges - 3 knuckles

270° STAINLESS STEEL STEEL RoHS

Riveted pin.
Other dimensions or variants are available on request.
Raw steel pin for raw steel hinges. 304 stainless steel pin for 304 stainless steel hinges.

Part number	Material	Finish	A	B	C	D	E	Note	Weight (g)
72-1-3346	steel	raw	32	32	3	4	4	1 MR (railway code)	33
72-1-3348	steel	raw	32	50	3	4	4	3 MR (railway code)	47
72-1-3349	steel	raw	50	50	3	4	4	4 MR (railway code)	75
72-1-3352	steel	raw	50	50	5	6	6	7 MR (railway code)	122
72-1-3351	steel	raw	50	80	3	4	4	6 MR (railway code)	108
72-1-3354	steel	raw	50	80	5	6	6	9 MR (railway code)	182
72-1-3990	304 stainless steel	raw	50	50	3	4	4	4 MR (railway code)	72
72-1-4186	304 stainless steel	raw	50	80	3	4	4	6 MR (railway code)	113
72-1-4187	304 stainless steel	raw	50	80	5	6	6	9 MR (railway code)	182

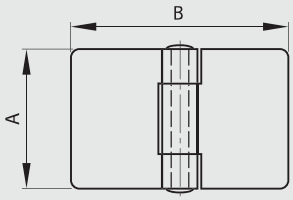

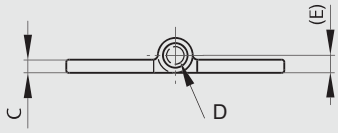

Forged hinges with reversed leaves - 3 knuckles

270° STAINLESS STEEL STEEL RoHS

Riveted pin.
Other dimensions or variants are available on request.
Raw steel pin for raw steel hinges. 304 stainless steel pin for 304 stainless steel hinges.

Part number	Material	Finish	A	B	C	D	E	Note	Weight (g)
72-1-3380	steel	raw	32	50	3	4	4	17 MR (railway code)	33
72-1-3381	steel	raw	50	50	3	4	4	20 MR (railway code)	71
72-1-3384	steel	raw	50	50	5	6	6	23 MR (railway code)	122
72-1-3383	steel	raw	50	80	3	4	4	22 MR (railway code)	104
72-1-3386	steel	raw	50	80	5	6	6	25 MR (railway code)	182
72-1-3992	304 stainless steel	raw	50	50	3	4	4	20 MR (railway code)	71
72-1-3993	304 stainless steel	raw	50	80	3	4	4	22 MR (railway code)	112

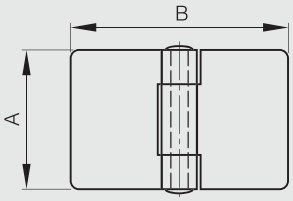

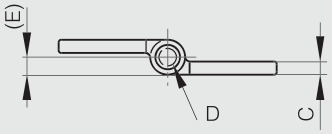

Forged hinges - 5 knuckles

NEW

270° STAINLESS STEEL STEEL RoHS

Riveted pin (except part number: 72-1-4288 with removable pin).
Other dimensions or variants are available on request.
Raw steel pin for raw steel hinges. 304 stainless steel pin for 304 stainless steel hinges.

	Part number	Material	Finish	A	B	C	D	E	Note	Weight (g)
	72-1-4289	steel	raw	60	60	6	6	6		283
	72-1-3410	steel	raw	80	80	5	6	6	1 FR (railway code)	288
	72-1-3414	steel	raw	80	80	8	10	10	14 FR (railway code)	485
	72-1-3412	steel	raw	80	130	5	6	6	3 FR (railway code)	444
	72-1-3416	steel	raw	80	130	8	10	10	16 FR (railway code)	761
	72-1-3413	steel	raw	125	80	5	6	6	11 FR (railway code)	444
	72-1-3417	steel	raw	125	130	8	10	10	24 FR (railway code)	1240
NEW	72-1-3420	steel	raw	160	130	8	10	10	34 FR (railway code)	1480
	72-1-4290	304 stainless steel	raw	60	60	6	6	6		283
	72-1-3991	304 stainless steel	raw	80	80	5	6	6	1 FR (railway code)	298
	72-1-4279	304 stainless steel	raw	80	130	5	6	6	3 FR (railway code)	446
	72-1-4288	304 stainless steel	raw	80	130	5	6	6	Removable pin	457

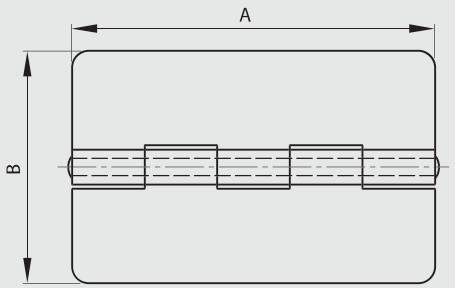

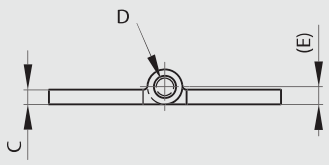

Forged lift-off hinges

With raw brass washer.

Part number	Material	Finish	A	B	C	D	E	F	G	S	Note	Weight (g)
14-1-3328	steel	raw	48	40	3	4	4	32	8	4	type 1	52
14-1-3329	steel	raw	48	40	3	4	4	32	8	4	type 2	52
14-1-3330	steel	raw	60	50	3.5	5	5	40	10	5.5	type 1	97
14-1-3331	steel	raw	60	50	3.5	5	5	40	10	5.5	type 2	95
14-1-3332	steel	raw	72	60	4	6	6	48	12	6.5	type 1	156
14-1-3333	steel	raw	72	60	4	6	6	48	12	6.5	type 2	156
14-1-3334	steel	raw	84	70	4.5	7	7	56	14	7.5	type 1	245
14-1-3335	steel	raw	84	70	4.5	7	7	56	14	7.5	type 2	245
14-1-3336	steel	raw	96	80	5	8	8	66	16	8.5	type 1	360
14-1-3337	steel	raw	96	80	5	8	8	66	16	8.5	type 2	360

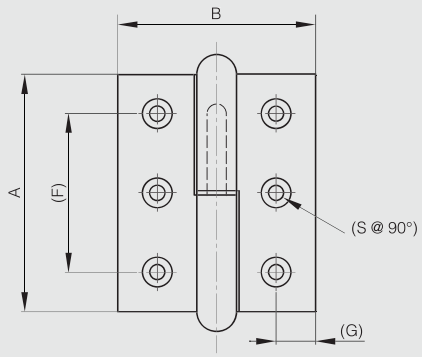

14-1-3328 & 14-1-3330
14-1-3332 & 14-1-3334 & 14-1-3336

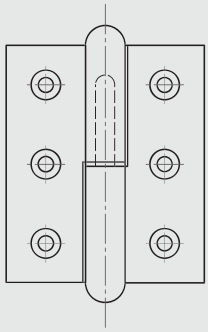

14-1-3329 & 14-1-3331
14-1-3333 & 14-1-3335 & 14-1-3337

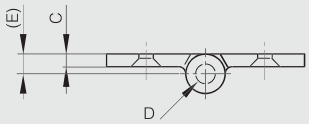

Modulo range: composed of parts to be assembled by customer (or on request)

Pin is made of either an expanded pin (BG) or a headed pin (BT) with a plug (VA).

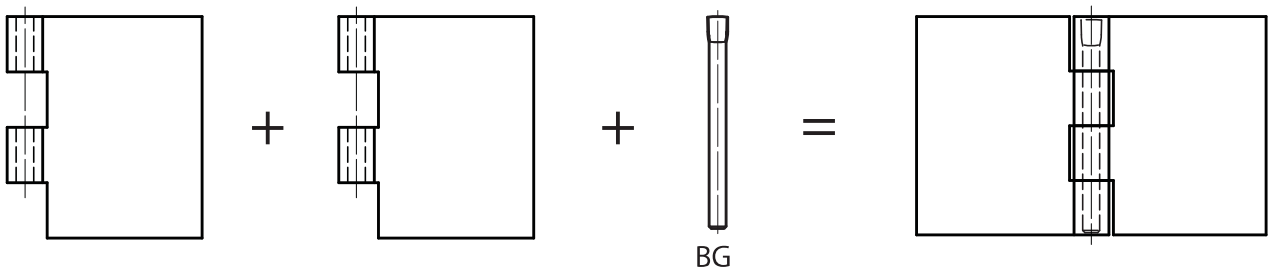

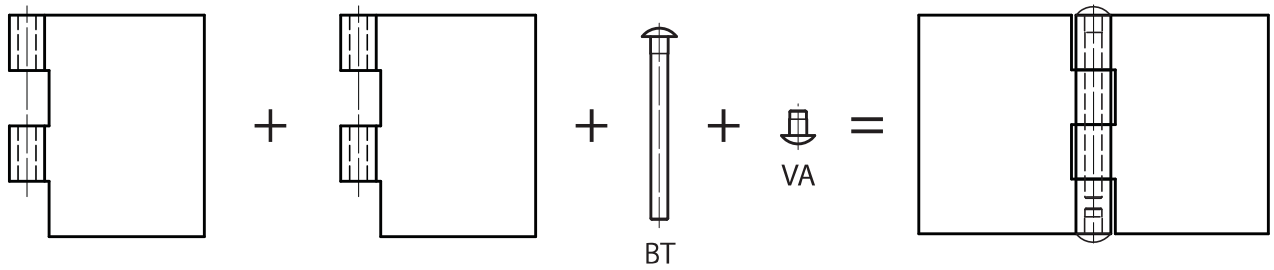

BG: Expanded pin
BT: Headed pin
VA: Plug

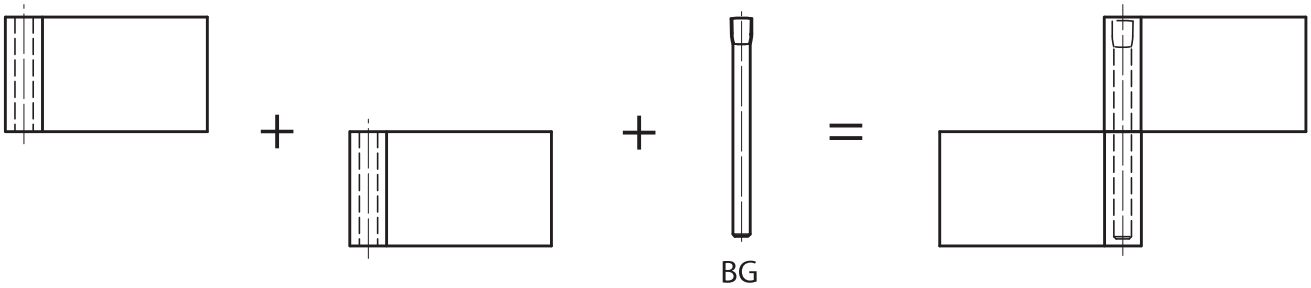

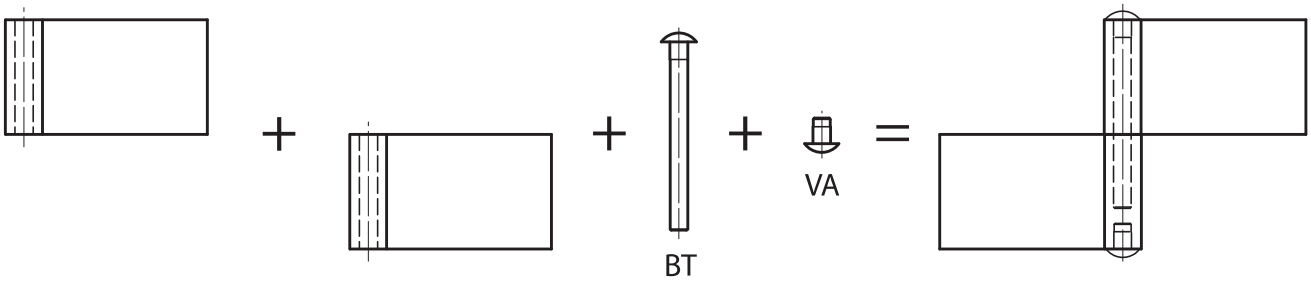

Parts can be delivered assembled, on request (**part number 91-1-0001**).

NOTE:
- Only leaves with the same thickness can be fitted together.
- The expanded pin (BG) can be assembled or disassembled with a hammer.
- The headed pin BT and the plug VA are fitted together with a hammer and make the pin non removable.

Modifications:
This range of hinges has been designed to make modifications easier (cranking, drilling…) for our customers.
However any in-house modification is possible with a MOQ of 250 units for stainless steel material and 500 units for steel material.
Please ask for more information.

Half leaves for Modulo hinges - thickness 3 mm

Leaves can be combined together and with either:
- a 6 mm diameter expanded pin (BG) (part numbers 27-1-3820, 27-1-3823),
- a 6 mm pin in POM (part number 27-1-3938),
- a 6 mm diameter headed pin (BT) (part numbers 27-1-3826, 27-1-3829),
with a plug (part numbers 27-1-3832, 27-1-3835).

Part number	Material	Finish	A	B	C	D	Weight (g)
50-1-3991	steel	raw	80	30	3	6	74
50-1-3992	steel	raw	80	40	3	6	93
50-1-3993	steel	raw	80	50	3	6	111
50-1-3994	steel	raw	80	60	3	6	130
50-1-3995	steel	raw	80	80	3	6	168
52-1-3771	304 stainless steel	deburred	80	30	3	6	74
52-1-3772	304 stainless steel	deburred	80	40	3	6	93
52-1-3773	304 stainless steel	deburred	80	50	3	6	111
52-1-3774	304 stainless steel	deburred	80	60	3	6	130
52-1-3775	304 stainless steel	deburred	80	80	3	6	168

Half leaves for Modulo hinges - thickness 4 mm

Leaves can be combined together and with either:
- a 8 mm diameter expanded pin (BG) (part numbers 27-1-3821, 27-1-3824),
- a 8 mm diameter headed pin (BT) (part numbers 27-1-3827, 27-1-3830),
with a plug (part numbers 27-1-3833, 27-1-3836).

Part number	Material	Finish	A	B	C	D	Weight (g)
50-1-3996	steel	raw	100	30	4	8	131
50-1-3997	steel	raw	100	40	4	8	163
50-1-3998	steel	raw	100	50	4	8	194
50-1-3999	steel	raw	100	60	4	8	225
50-1-4000	steel	raw	100	80	4	8	288
52-1-3776	304 stainless steel	deburred	100	30	4	8	131
52-1-3777	304 stainless steel	deburred	100	40	4	8	163
52-1-3778	304 stainless steel	deburred	100	50	4	8	194
52-1-3779	304 stainless steel	deburred	100	60	4	8	225
52-1-3780	304 stainless steel	deburred	100	80	4	8	288

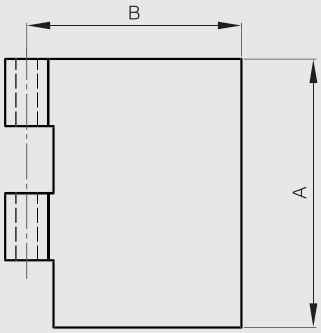

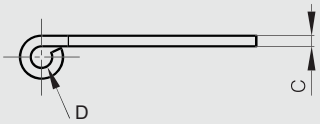

Half leaves for Modulo hinges - thickness 5 mm

Leaves can be combined together and with either:
- a 10 mm diameter expanded pin (BG) (part numbers 27-1-3822, 27-1-3825),
- a 10 mm diameter headed pin (BT) (part numbers 27-1-3828, 27-1-3831),
with a plug (part numbers 27-1-3834, 27-1-3837).

Part number	Material	Finish	A	B	C	D	Weight (g)
50-1-4001	steel	raw	120	30	5	10	211
50-1-4002	steel	raw	120	40	5	10	258
50-1-4003	steel	raw	120	50	5	10	305
50-1-4004	steel	raw	120	60	5	10	352
50-1-4005	steel	raw	120	80	5	10	447
52-1-3781	304 stainless steel	deburred	120	30	5	10	211
52-1-3782	304 stainless steel	deburred	120	40	5	10	258
52-1-3783	304 stainless steel	deburred	120	50	5	10	305
52-1-3784	304 stainless steel	deburred	120	60	5	10	352
52-1-3785	304 stainless steel	deburred	120	80	5	10	447

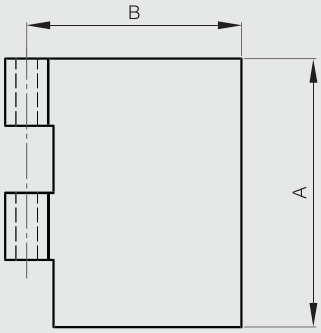

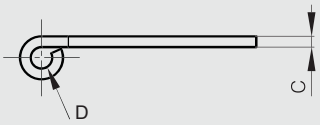

Half leaves for Modulo pin hinges - thickness 3 mm

Leaves can be combined together and with either:
- a 6 mm diameter expanded pin (BG) (part numbers 27-1-3820, 27-1-3823),
- a 6 mm pin in POM (part number 27-1-3938),
- a 6 mm diameter headed pin (BT) (part numbers 27-1-3826, 27-1-3829),
with a plug (part numbers 27-1-3832, 27-1-3835).

Part number	Material	Finish	A	B	C	D	Weight (g)
12-1-3941	steel	raw	40	20	3	6	25
12-1-3866	steel	raw	40	30	3	6	37
12-1-3867	steel	raw	40	50	3	6	56
12-1-3868	steel	raw	40	80	3	6	84
12-1-3943	steel	raw	40	120	3	6	126
12-1-3942	304 stainless steel	deburred	40	20	3	6	25
12-1-3869	304 stainless steel	deburred	40	30	3	6	37
12-1-3870	304 stainless steel	deburred	40	50	3	6	56
12-1-3871	304 stainless steel	deburred	40	80	3	6	84
12-1-3944	304 stainless steel	deburred	40	120	3	6	126

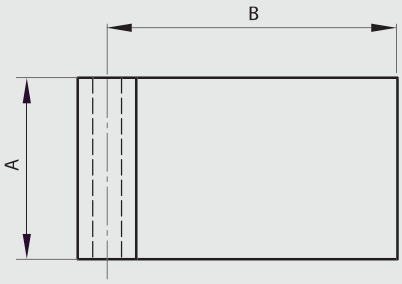

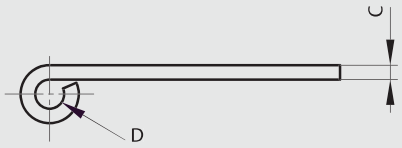

Half leaves for Modulo pin hinges - thickness 4 mm

Leaves can be combined together and with either:
- a 8 mm diameter expanded pin (BG) (part numbers 27-1-3821, 27-1-3824),
- a 8 mm diameter headed pin (BT) (part numbers 27-1-3827, 27-1-3830),
with a plug (part numbers 27-1-3833, 27-1-3836).

Part number	Material	Finish	A	B	C	D	Weight (g)
12-1-3872	steel	raw	50	30	4	8	66
12-1-3873	steel	raw	50	50	4	8	97
12-1-3874	steel	raw	50	80	4	8	144
12-1-3875	304 stainless steel	deburred	50	30	4	8	66
12-1-3876	304 stainless steel	deburred	50	50	4	8	97
12-1-3877	304 stainless steel	deburred	50	80	4	8	144

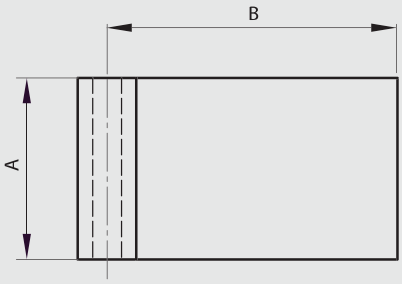

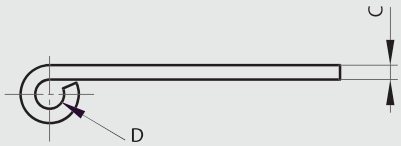

Half leaves for Modulo pin hinges - thickness 5 mm

Leaves can be combined together and with either:
- a 10 mm diameter expanded pin (BG) (part numbers 27-1-3822, 27-1-3825),
- a 10 mm diameter headed pin (BT) (part numbers 27-1-3828, 27-1-3831),
with a plug (part numbers 27-1-3834, 27-1-3837).

Part number	Material	Finish	A	B	C	D	Weight (g)
12-1-3878	steel	raw	60	40	5	10	129
12-1-3879	steel	raw	60	60	5	10	176
12-1-3880	steel	raw	60	80	5	10	224
12-1-3881	304 stainless steel	deburred	60	40	5	10	129
12-1-3882	304 stainless steel	deburred	60	60	5	10	176
12-1-3883	304 stainless steel	deburred	60	80	5	10	224

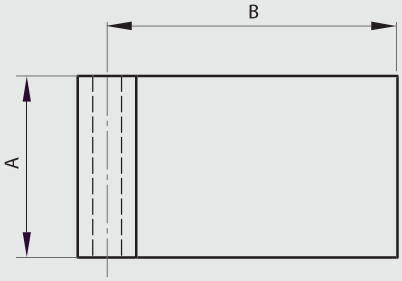

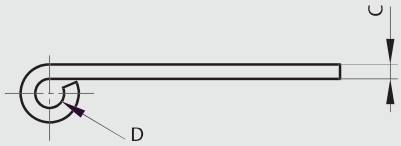

Pin in POM for Modulo system

POLYMER RoHS

This pin can be combined with Modulo hinges for thickness 3 mm only.
It enables you to make a hinge pin.
Pin can be easily removed without tool.

Part number	Material	Finish	D	L	Weight (g)
27-1-3938	POM	white	6	80	2

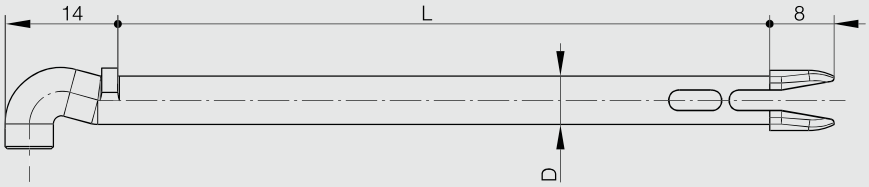

Expanded pin BG for Modulo system

STAINLESS STEEL STEEL RoHS

This pin alone enables you to make a hinge pin for Modulo hinges.

Part number	Material	Finish	D	L	Weight (g)
27-1-3820	steel	zinc plated	6	80	18
27-1-3821	steel	zinc plated	8	100	39
27-1-3822	steel	zinc plated	10	120	74
27-1-3823	304 stainless steel	raw	6	80	18
27-1-3824	304 stainless steel	raw	8	100	39
27-1-3825	304 stainless steel	raw	10	120	74

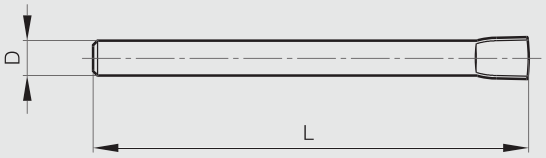

BG Broche Gonflée
Expanded pin
Gestauchter Stift

Headed pin BT for Modulo system

This pin combined with a plug (VA) enables you to make a hinge pin for Modulo hinges.

STAINLESS STEEL STEEL RoHS

Part number	Material	Finish	D	E	L	Weight (g)
27-1-3826	steel	zinc plated	6	3	66	16
27-1-3827	steel	zinc plated	8	4	86	36
27-1-3828	steel	zinc plated	10	5	106	68
27-1-3829	304 stainless steel	raw	6	3	66	16
27-1-3830	304 stainless steel	raw	8	4	86	36
27-1-3831	304 stainless steel	raw	10	5	106	68

Plug (VA) for Modulo system

This plug combined with a headed pin (BT) enables you to make a hinge pin for Modulo hinges.

STAINLESS STEEL STEEL RoHS

Part number	Material	Finish	D	F	L	Weight (g)
27-1-3832	steel	zinc plated	6	12	12	3
27-1-3833	steel	zinc plated	8	16	12	6
27-1-3834	steel	zinc plated	10	20	12	11
27-1-3835	304 stainless steel	raw	6	12	12	3
27-1-3836	304 stainless steel	raw	8	16	12	6
27-1-3837	304 stainless steel	raw	10	20	12	11

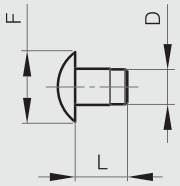

VA VAse Plug Stopfen

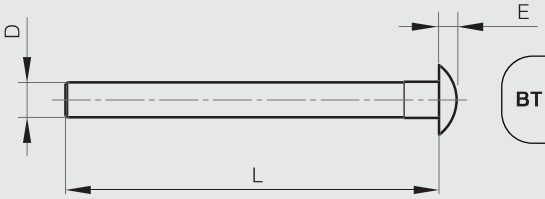

BT Broche à Tête Headed pin Stift mit Kopf

Heavy duty hinge 115 x 70 mm - 5 knuckles

304 stainless steel riveted pin.

	Part number	Material	Finish	A	B	C	D	Weight (g)
NEW	52-1-4141	304 stainless steel	brightened	115	70	4	10	420

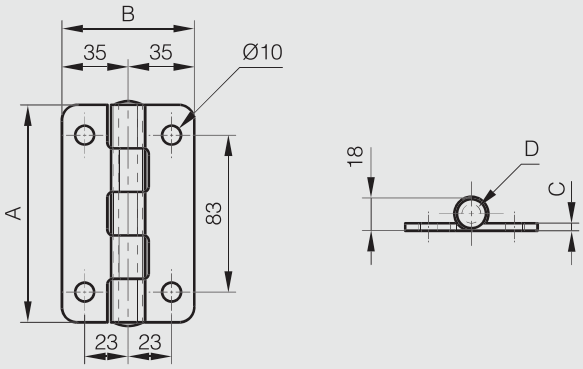

Heavy duty hinge 115 x 125 mm - 5 knuckles

304 stainless steel riveted pin.

	Part number	Material	Finish	A	B	C	D	Weight (g)
NEW	52-1-4139	304 stainless steel	brightened	115	125	4	10	570

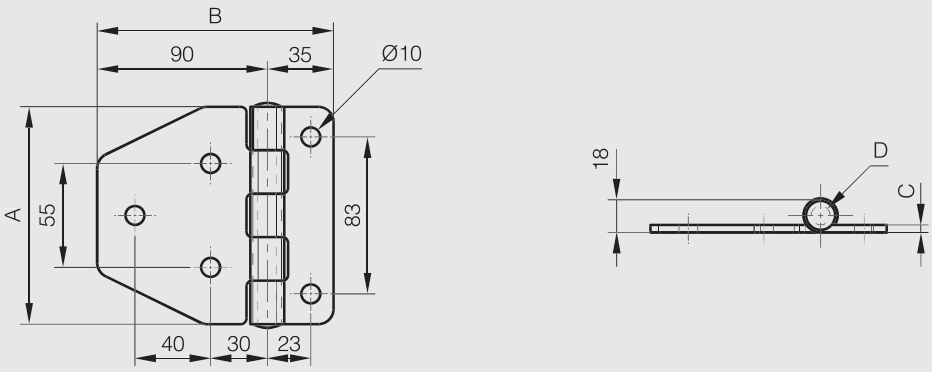

Heavy duty hinge 115 x 155 mm - 5 knuckles

304 stainless steel riveted pin.

	Part number	Material	Finish	A	B	C	D	Weight (g)
NEW	52-1-4140	304 stainless steel	brightened	115	155	4	10	650

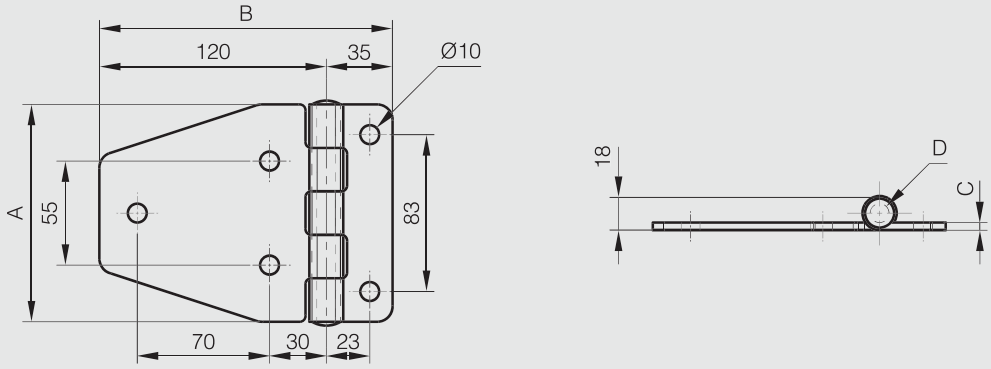

Heavy duty hinge 115 x 125 mm - 3 knuckles

304 stainless steel riveted pin.

	Part number	Material	Finish	A	B	C	D	E	Weight (g)
NEW	52-1-4142	304 stainless steel	brightened	115	125	4	10	65	470

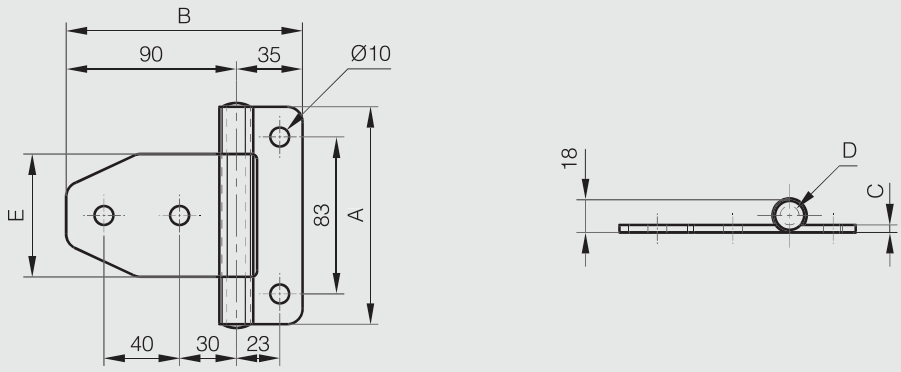

Heavy duty hinge 115 x 155 mm - 3 knuckles

304 stainless steel riveted pin.

	Part number	Material	Finish	A	B	C	D	E	Weight (g)
NEW	52-1-4143	304 stainless steel	brightened	115	155	4	10	65	530

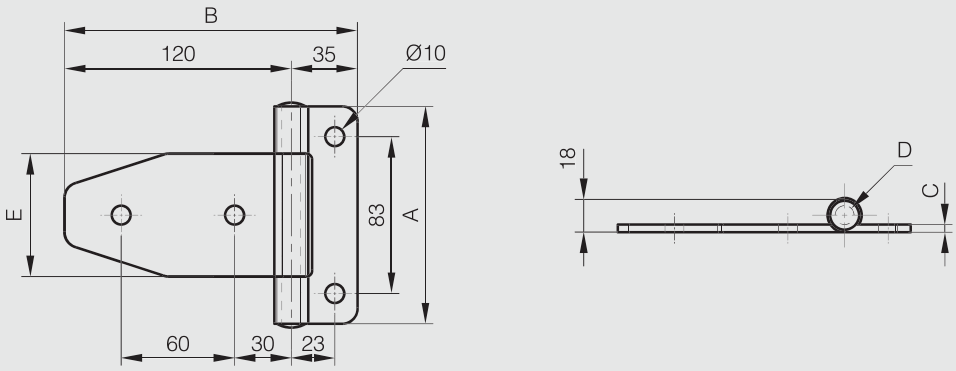

Heavy duty hinge 115 x 215 mm - 3 knuckles

304 stainless steel riveted pin.

	Part number	Material	Finish	A	B	C	D	E	Weight (g)
NEW	52-1-4144	304 stainless steel	brightened	115	215	4	10	65	650

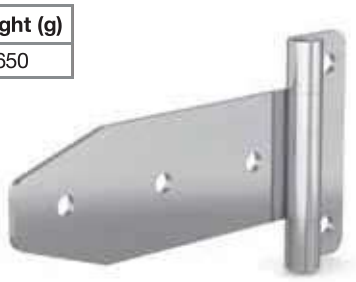

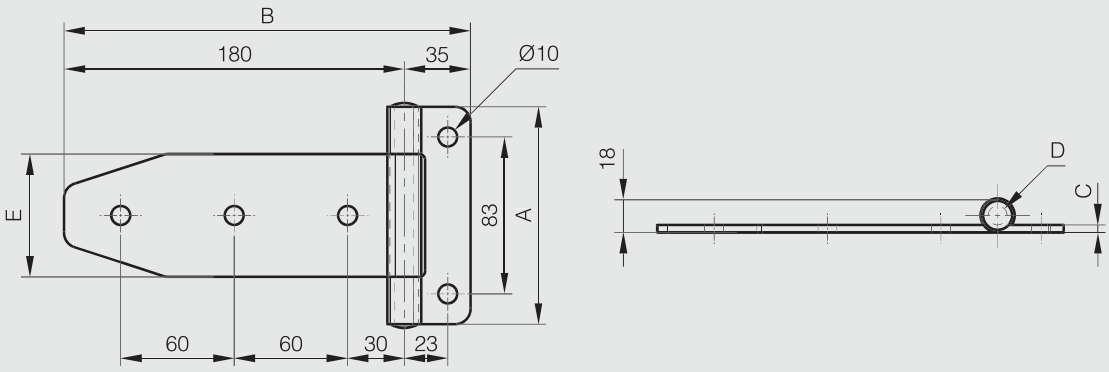

Heavy duty hinge - 66 x 230 mm

Stainless steel riveted pin.

270° STEEL RoHS

Part number	Material	Finish	A	B	C	D	S	Weight (g)
50-1-4060	steel	zinc plated	66	230	5	10	12	622

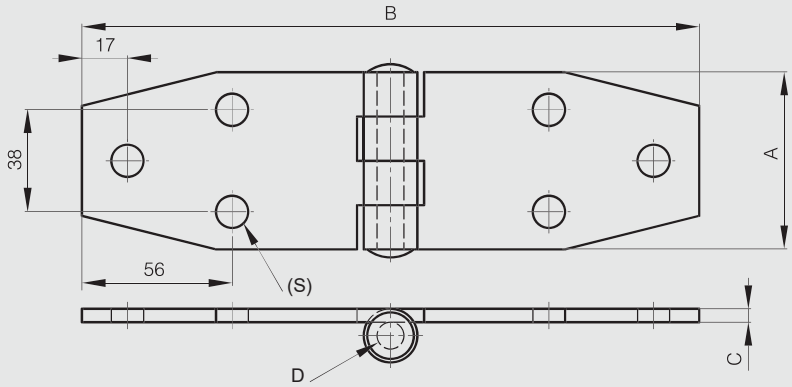

Heavy duty hinge - 66 x 215 mm

Stainless steel riveted pin.

180° STEEL RoHS

Part number	Material	Finish	A	B	C	D	S	Weight (g)
50-1-4061	steel	zinc plated	66	215	5	10	12	622

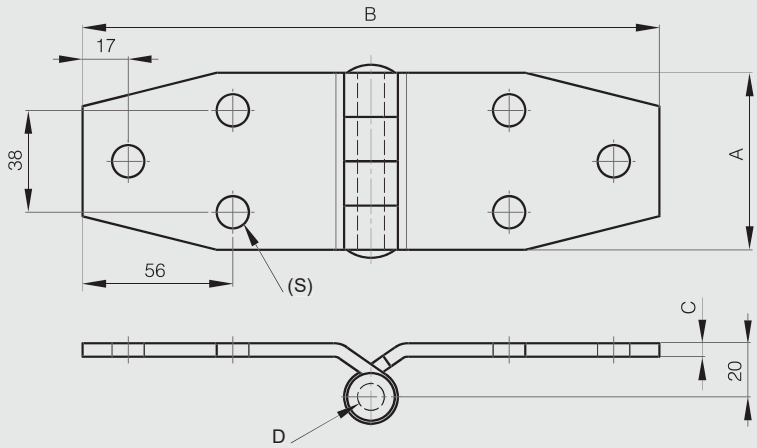

Heavy duty hinges - 65 x 230 mm

Riveted pin.

Part number	Material	Finish	A	B	C	D	E	S	Note	Weight (g)
52-1-3553	304 stainless steel	brightened	65	230	4	10	39	6.5	drilled	430
52-1-3593	304 stainless steel	brightened	65	230	4	10	39		undrilled	450

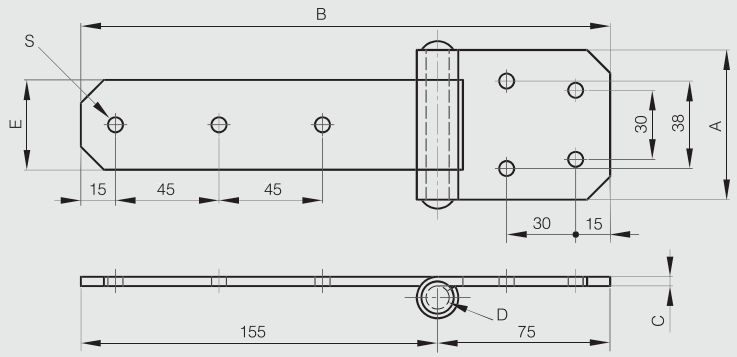

Heavy duty hinge - 130 x 95 mm

Stainless steel riveted pin.

Part number	Material	Finish	A	B	C	D	Weight (g)
50-1-3944	steel	raw	130	95	4	10	580

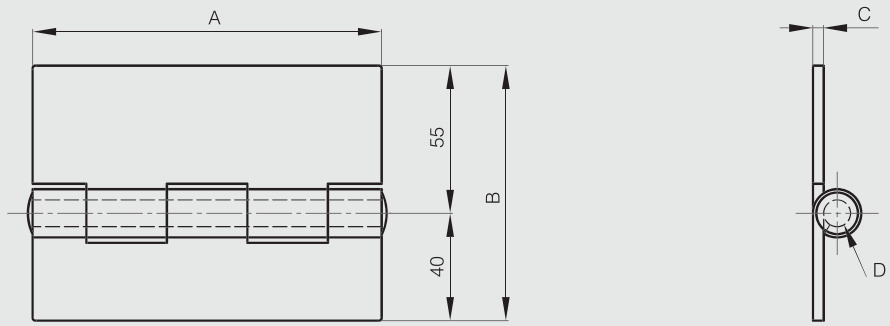

Heavy duty hinge 63.5 x 38 mm

NEW

270° STAINLESS STEEL

Hinge tested to EN1935: 2002 grades 1-7
Recommended for door weights less than 40 kg, annual usage up to 10,000 cycles.

	Part number	Material	Finish	A	B	C	D	S	Weight (g)
NEW	52-7-4126	304 stainless steel	satin polished	63.5	38	2	3	5.4	45

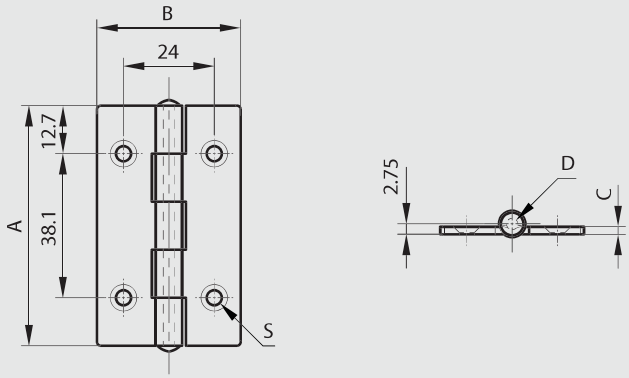

Heavy duty hinge 76 x 50 mm

NEW

270° STAINLESS STEEL

Hinge tested to EN1935: 2002 grades 1-7
Recommended for door weights less than 40 kg, annual usage up to 10,000 cycles.

	Part number	Material	Finish	A	B	C	D	S	Weight (g)
NEW	52-7-4127	304 stainless steel	satin polished	76	50	2	4	5.4	70

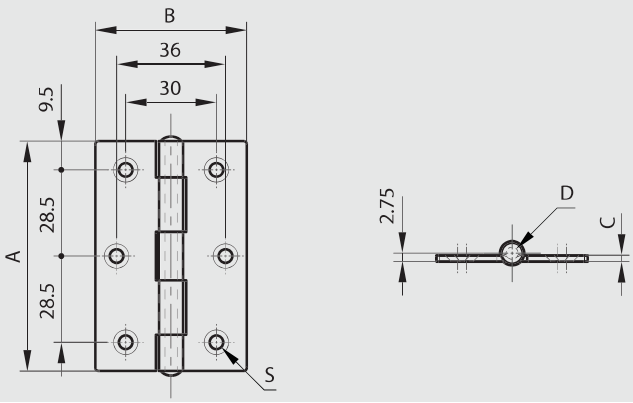

Stainless steel dual washer hinge 101.6 x 73 mm

Hinge tested to EN1935: 2002 grade 10.
Recommended for weights less than 60 kg, annual usage up to 25,000 cycles.

	Part number	Material	Finish	A	B	C	D	S	Weight (g)
NEW	52-7-4128	304 stainless steel	satin polished	101.6	73	2	6	5.4	145

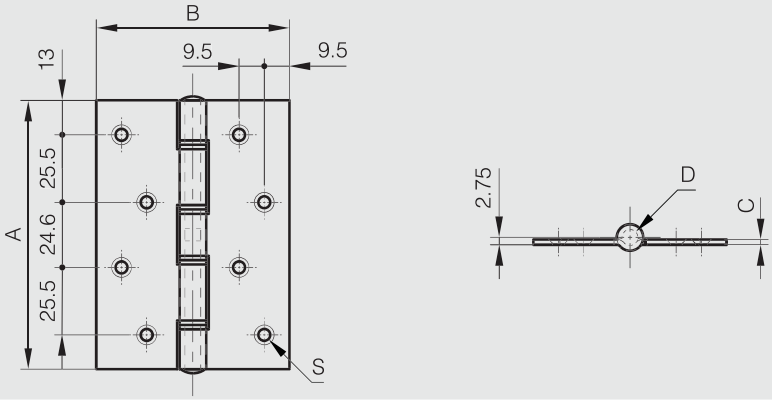

Polymer bushing and stainless steel washer hinge 101.6 x 76.2 mm

Hinge tested to EN1935: 2002 grades 12-13.
Recommended for door weights less than 120kg, annual usage up to 100,000 cycles.

	Part number	Material	Finish	A	B	C	D	S	Weight (g)
NEW	50-7-4285	steel	satin zinc	101.6	76.2	2.5	7	7.4	205
NEW	52-7-4129	304 stainless steel	satin polished	101.6	76.2	2.5	7	7.4	205

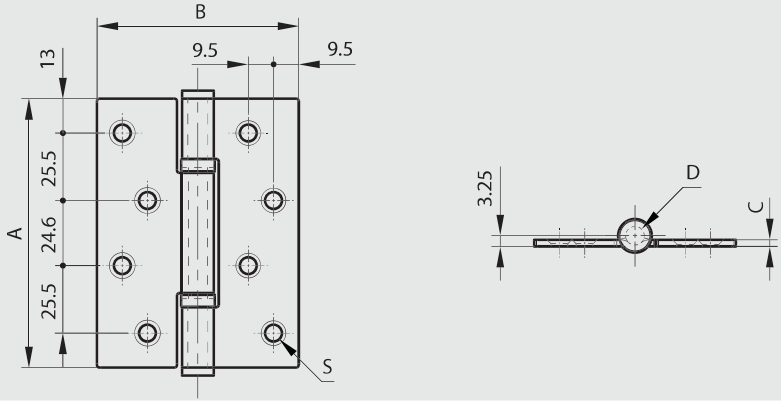

Bronze bushing hinge 101.6 x 76.2 mm

NEW

270° STAINLESS STEEL

Hinge tested to EN1935: 2002 grade 13.
Recommended for door weights less than 120 kg, annual usage up to 100,000 cycles.
Door thickness: 35 mm to 54 mm

	Part number	Material	Finish	A	B	C	D	S	Weight (g)
NEW	52-7-4130	304 stainless steel	satin polished	101.6	76.2	2.5	5	6.35	185

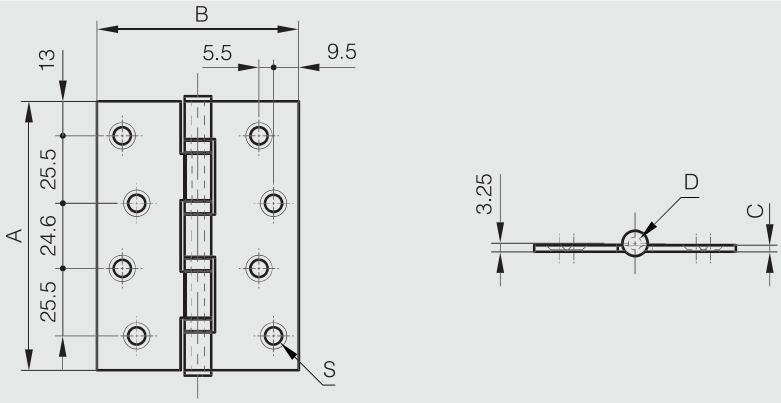

Polymer shrouded bushing hinge 101.6 x 76.2 mm

NEW

270° STAINLESS STEEL

Hinge tested to EN1935: 2002 grades 13-14.
Recommended for door weights less than 160 kg, annual usage up to 200,000 cycles.
Door thickness: 44 mm to 54 mm.

	Part number	Material	Finish	A	B	C	D	S	Weight (g)
NEW	52-7-4131	304 stainless steel	satin polished	101.6	76.2	3	7	8	235

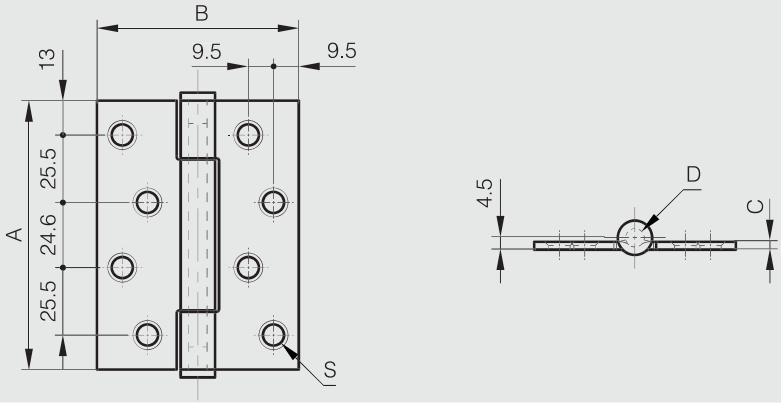

Polymer shrouded bushing hinge 101.6 x 88.9 mm

NEW

270° STAINLESS STEEL

Hinge tested to EN1935: 2002 grades 13-14.
Recommended for door weights less than 160 kg, annual usage up to 200,000 cycles.
Door thickness: 44 mm to 54 mm.
Lift-off hinge version 14-7-3902 and 14-7-3903

	Part number	Material	Finish	A	B	C	D	S	Weight (g)
NEW	52-7-4132	304 stainless steel	satin polished	101.6	88.9	3	7	8	270

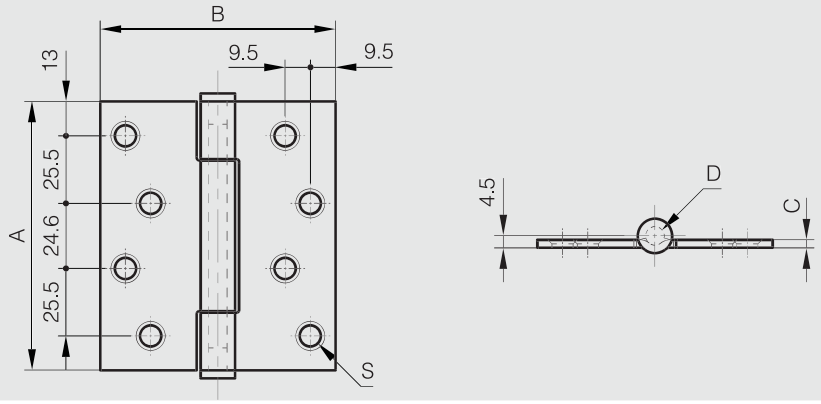

Polymer bushing lift-off hinge

NEW

270° STAINLESS STEEL

Hinge tested to EN1935: 2002 grades 13-14.
Recommended for door weights less than 160 kg, annual usage up to 200,000 cycles.
Door thickness: 44 mm to 54 mm.
Standard hinge version 52-7-4132.

	Part number	Material	Finish	A	B	C	D	S	Note	Weight (g)
NEW	14-7-3902	304 stainless steel	satin polished	101.6	88.9	3	7	8.5	Type 2	255
NEW	14-7-3903	304 stainless steel	satin polished	101.6	88.9	3	7	8.5	Type 1	255

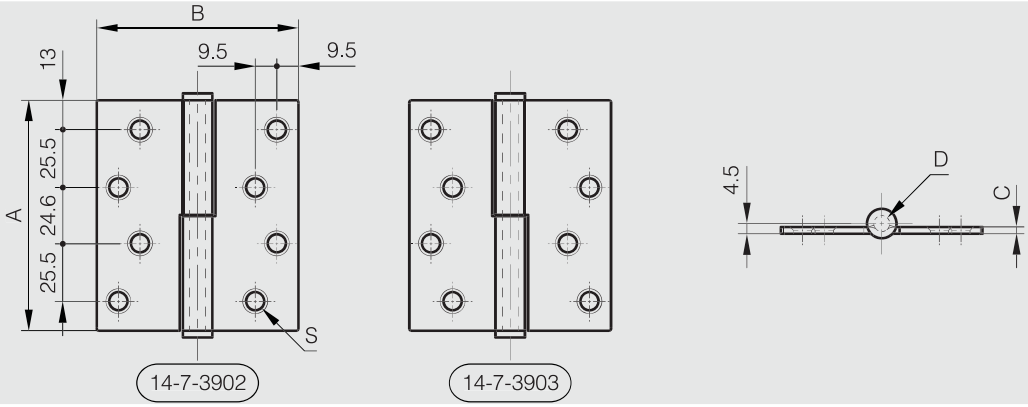

Stainless steel and bronze shrouded bushing hinge 114.3 x 114.3 mm

NEW

270° STAINLESS STEEL

Hinge tested to EN1935: 2002 grades 12-14.
Recommended for door weights less than 160 kg, annual usage up to 150,000 cycles.
For heavy duty applications.
Door thickness: 44 mm to 68 mm.

	Part number	Material	Finish	A	B	C	D	S	Weight (g)
NEW	52-7-4133	316 stainless steel	satin polished	114.3	114.3	4	9	8.5	570

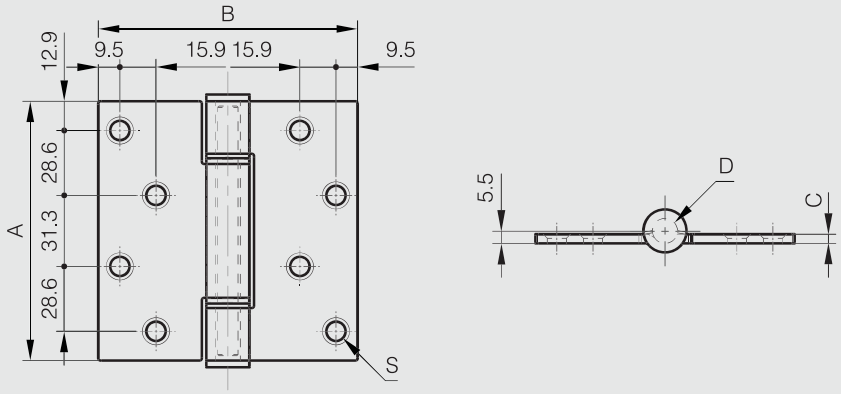

Round top weld-on steel hinges - brass washer

Fixed pin and washer.

Part number	Material	Finish	A	B	C	D	Pin material	Weight (g)
14-7-3585	steel	raw	40	10	8	5	steel	16
14-7-3573	steel	raw	60	12	10	6	steel	36
14-7-3574	steel	raw	80	16	13	8	steel	84
14-7-3575	steel	raw	100	20	16	10	steel	160
14-7-3586	steel	raw	120	20	16	11	steel	195
14-7-3587	steel	raw	135	22.5	18	12	steel	270
14-7-3576	steel	raw	150	25.5	20	13	steel	390
14-7-3794	steel	raw	180	25.5	20	13	steel	465
14-7-3588	steel	raw	200	29	23	16	steel	660
14-7-3589	steel	raw	40	10	8	5	brass	16
14-7-3590	steel	raw	60	12	10	6	brass	36
14-7-3591	steel	raw	80	16	13	8	brass	84
14-7-3592	steel	raw	100	20	16	10	brass	160
14-7-3593	steel	raw	120	20	16	11	brass	195
14-7-3594	steel	raw	135	22.5	18	12	brass	270
14-7-3595	steel	raw	150	25.5	20	13	brass	390
14-7-3596	steel	raw	200	29	23	16	brass	660

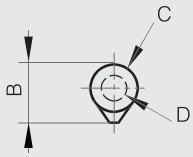

Round top weld-on steel hinges - steel pin - ball bearing

Fixed pin.

Part number	Material	Finish	A	B	C	D	Weight (g)
14-7-3610	steel	raw	141	22.5	18	12	272
14-7-3611	steel	raw	155.5	25.5	20	13	392
14-7-3612	steel	raw	206	29	23	16	662

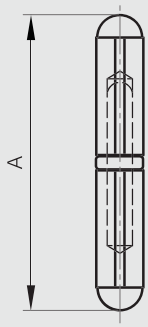

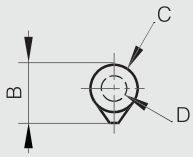

Round top weld-on steel hinges - steel pin - brass washer - with grease nipple

180° STEEL RoHS

Fixed pin and washer.

Part number	Material	Finish	A	B	C	D	Weight (g)
14-7-3796	steel	raw	60	12	10	6	36
14-7-3786	steel	raw	80	16	13	8	84
14-7-3787	steel	raw	100	20	16	10	160
14-7-3788	steel	raw	120	20	16	11	195
14-7-3793	steel	raw	135	22.5	18	12	270
14-7-3789	steel	raw	150	25.5	20	13	390
14-7-3790	steel	raw	180	25.5	20	13	465
14-7-3791	steel	raw	200	29	23	16	660

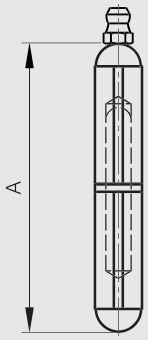

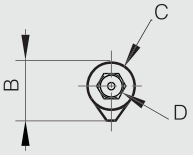

Round top weld-on aluminium hinges - stainless steel pin - stainless steel washer

180° ALU

Part number	Material	Finish	A	B	C	D	Weight (g)
14-7-3815	aluminium	raw	60	12	10	6	20
14-7-3816	aluminium	raw	80	16	13	8	40
14-7-3817	aluminium	raw	100	20	16	10	75
14-7-3818	aluminium	raw	120	20	16	11	93

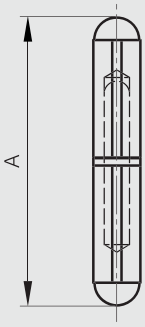

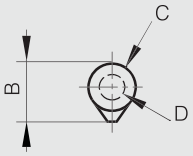

Flat top weld-on steel hinges - brass washer

Fixed pin and washer.

Part number	Material	Finish	A	B	C	D	Pin material	Weight (g)
14-7-3583	steel	raw	45	10	8	5	steel	20
14-7-3569	steel	raw	60	12	10	6	steel	40
14-7-3570	steel	raw	80	16	13	7	steel	90
14-7-3571	steel	raw	100	20	16	9	steel	115
14-7-3603	steel	raw	120	20	16	9	steel	135
14-7-3572	steel	raw	140	25.5	20	11	steel	370
14-7-3584	steel	raw	200	29	23	16	steel	600
14-7-3597	steel	raw	45	10	8	5	brass	20
14-7-3598	steel	raw	60	12	10	6	brass	40
14-7-3599	steel	raw	80	16	13	7	brass	90
14-7-3600	steel	raw	100	20	16	9	brass	115
14-7-3604	steel	raw	120	20	16	9	brass	135
14-7-3601	steel	raw	140	25.5	20	11	brass	370

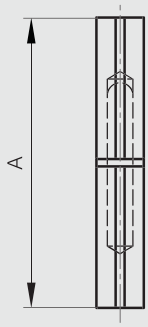

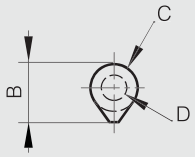

Flat top weld-on stainless steel hinges - stainless steel pin - brass washer

Fixed pin and washer. Produced mainly in stainless steel, for a complete description of the materials contact us.

Part number	Material	Finish	A	B	C	D	Weight (g)
14-7-3693	304 stainless steel	raw	60	12	10	6	40
14-7-3696	304 stainless steel	raw	80	16	13	7	90
14-7-3697	304 stainless steel	raw	100	20	16	9	115
14-7-3698	304 stainless steel	raw	120	20	16	9	135

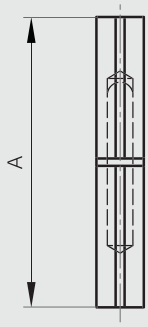

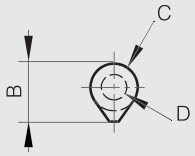

Flag hinges A - steel pin - brass washer

Fixed pin.

Part number	Material	Finish	A	B	C	D	E	Weight (g)
14-7-3634	steel	raw	63	80	4.2	8	15.5	150
14-7-3635	steel	raw	83.5	80	5.1	8	16	250
14-7-3636	steel	raw	104	92	5.5	9	17	390
14-7-3637	steel	raw	124	108	6.5	10	19	600
14-7-3638	steel	raw	144	108	6.5	10	19	720

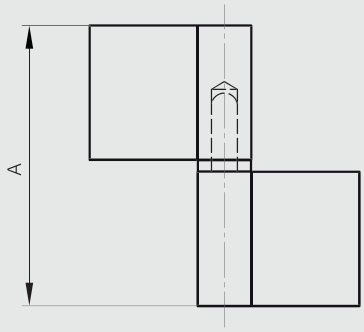

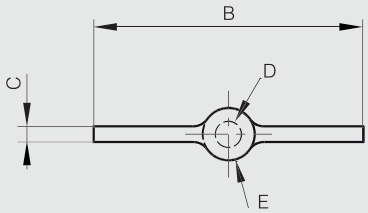

Flag hinges B - steel pin - brass washer

Fixed pin.

Part number	Material	Finish	A	B	C	D	E	Note	Weight (g)
14-7-3641	steel	raw	83.5	80	5.1	8	16	type 1	250
14-7-3642	steel	raw	83.5	80	5.1	8	16	type 2	250

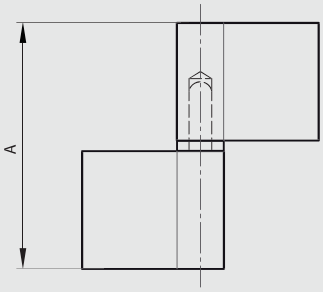

14-7-3641

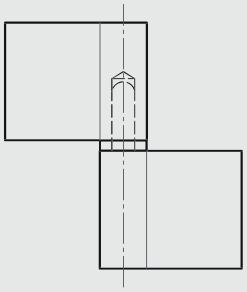

14-7-3642

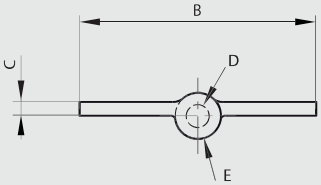

Heavy duty pin hinges

With chamfered edges.
Produced mainly in stainless steel, for a complete description of the materials contact us.

Part number	Material	Finish	A	B	C	D	E	F	H	S	Weight (g)
12-7-3810	303 stainless steel	brushed	64	13	16	6	16	16	9.5	M5x6	90
12-7-3811	303 stainless steel	brushed	76	13	19	6	19	18	13	M6x7.5	130

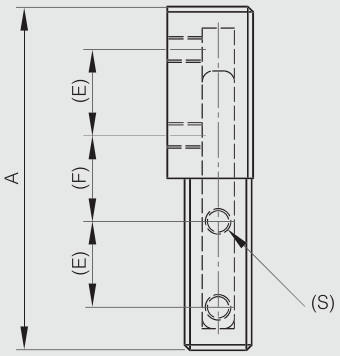

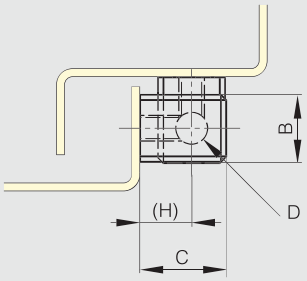

Carbon Kevlar hinges - 36 mm width

270° POLYMER RoHS

Hinge is constructed of rigid leaves and a flex unit.
The rigid leaves are woven carbon fibre in an epoxy matrix.
The Kevlar flex units are impregnated with a flexible urethane.
Design for bonding.
No metallic component. Ultra light, ultra thin.

Part number	Material	Finish	A	B	C	Weight (g)
54-1-3600	carbon / Kevlar	black	50	36	0.8	2
54-1-3601	carbon / Kevlar	black	100	36	0.8	3

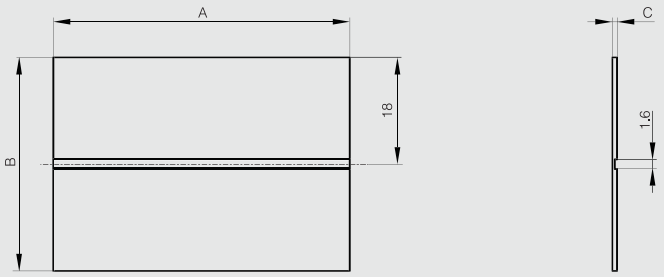

Carbon Kevlar hinges - 50 mm width

270° POLYMER RoHS

Hinge is constructed of rigid leaves and a flex unit.
The rigid leaves are woven carbon fibre in an epoxy matrix.
The Kevlar flex units are impregnated with a flexible urethane.
Design for bond or screws assembly.
Part number 54-7-3602 tested to over one million cycles through an 80° arc.
No metallic component. Ultra light, ultra thin.

Part number	Material	Finish	A	B	C	Weight (g)
54-1-3602	carbon / Kevlar	black	50	50	1.5	4
54-1-3603	carbon / Kevlar	black	100	50	1.5	10
54-1-3604	carbon / Kevlar	black	600	50	1.5	51

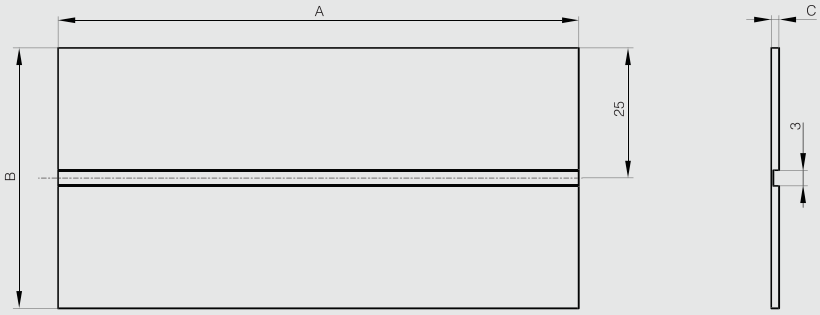

Carbon Kevlar hinges with glass fibre - 50 mm width

Hinge is constructed of rigid leaves and a flex unit.
The rigid leaves are a glass fibre carbon hybrid.
The Kevlar flex units are impregnated with a flexible urethane.
Design for bond or screws assembly.
No metallic component. Ultra light, ultra thin.

Part number	Material	Finish	A	B	C	Weight (g)
54-1-3605	carbon / glass fibre / Kevlar	black	50	50	2.5	10
54-1-3606	carbon / glass fibre / Kevlar	black	100	50	2.5	20

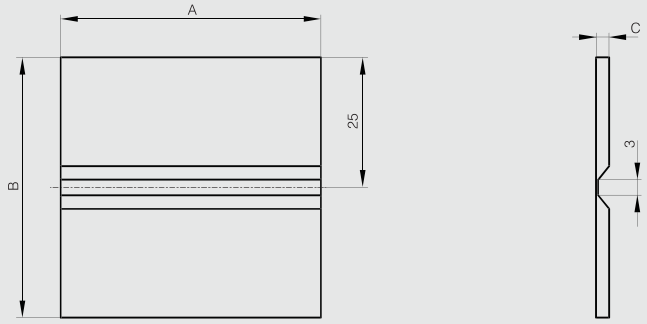

Square design hinges with countersunk holes

Hinges are made of 30% GF polyamide, pins are in 316L stainless steel.
UL 94 V-0 classification: please contact us.
White color: please contact us.

Part number	Material	Finish	A	B	C	D	E	F	G	S	Weight (g)
54-1-3564	polyamide	black	30	30	3	3	3.5	18	18	3.2	6
54-1-3565	polyamide	black	40	40	5.2	4	5.7	25	25	5.3	13
54-1-3566	polyamide	black	50	50	5.9	5	6.4	30	30	6.4	23
54-1-3567	polyamide	black	60	60	6.5	6	7	36	36	6.4	40

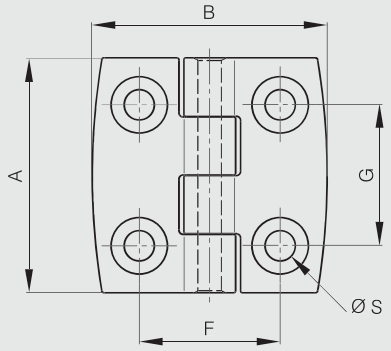

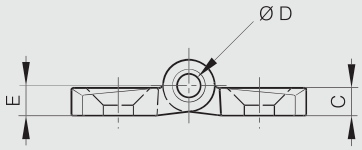

Square design hinges with studs

Hinges are made of 30% GF polyamide, pin is in 316L stainless steel and studs are in 304 stainless steel.
UL 94 V-0 classification: please ask us.
White color: please ask us.

Part number	Material	Finish	A	B	C	D	E	F	G	Weight (g)
54-1-3568	polyamide	black	60	60	6.5	6	7	36	36	62

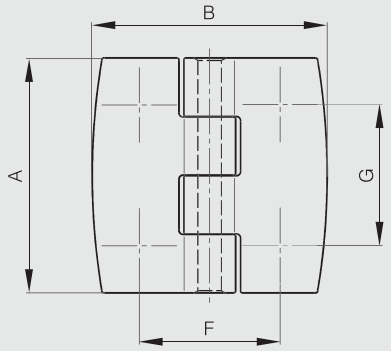

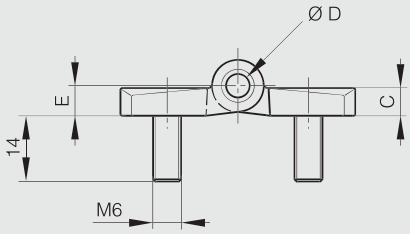

Symmetrical design hinges

Hinges are made of 30% GF polyamide, pins are in 316L stainless steel.
UL 94 V-0 classification: please contact us.
White color: please contact us.

Part number	Material	Finish	A	B	C	D	E	F	G	H	S	Weight (g)
54-1-3569	polyamide	black	40	80	5.2	4	5.7	13.5	25	19	5.3	20
54-1-3570	polyamide	black	40	120	5.2	4	5.7	14.5	25	38	5.3	25
54-1-3571	polyamide	black	50	100	5.9	5	6.4	16	30	24	6.4	35
54-1-3572	polyamide	black	60	120	6.5	6	7	18	36	30	6.4	62

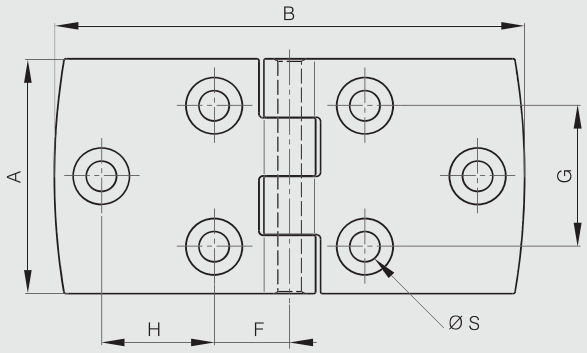

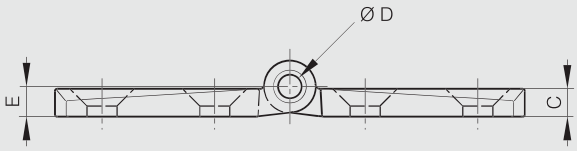

Asymmetrical design hinges

Hinges are made of 30% GF polyamide, pins are in 316L stainless steel.
UL 94 V-0 classification: please contact us.
White color: please contact us.

Part number	Material	Finish	A	B	C	D	E	F	G	H	S	Weight (g)
54-1-3573	polyamide	black	40	60	5.2	4	5.7	13	25	19	5.3	16
54-1-3574	polyamide	black	40	80	5.2	4	5.7	13.5	25	38	5.3	19
54-1-3575	polyamide	black	50	75	5.9	5	6.4	15.5	30	24	6.4	30
54-1-3576	polyamide	black	60	90	6.5	6	7	18	36	30	6.4	49

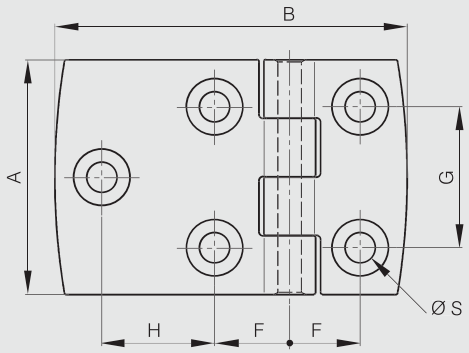

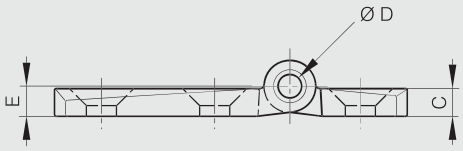

Polyamide hinges with countersunk holes

Hinges are made of 30% GF polyamide, pins are in 304 stainless steel.

Part number	Material	Finish	A	B	C	D	E	F	G	H	S	Weight (g)
54-1-3029	polyamide	black	40	40	5	4	5.5	25	25	9	5.3	14
54-1-3030	polyamide	black	50	50	6	6	6.5	30	30	11.5	6.4	29

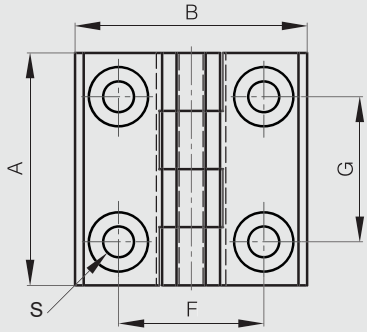

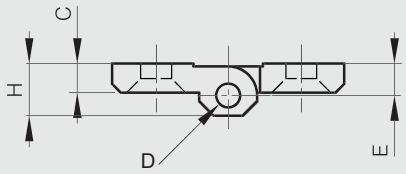

Polyamide hinges with studs

Hinges are made of 30% GF polyamide, pins are in 304 stainless steel.

Part number	Material	Finish	A	B	C	D	E	F	G	H	L	M	Weight (g)
54-1-3031	polyamide	black	40	40	5	4	5.5	25	25	9	11	M5	56
54-1-3032	polyamide	black	50	50	6	6	6.5	30	30	11.5	15	M6	76

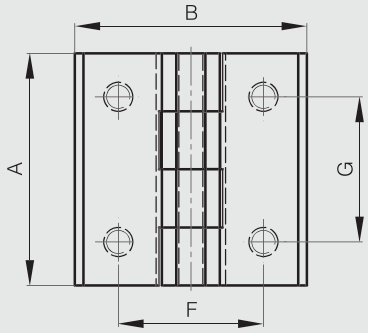

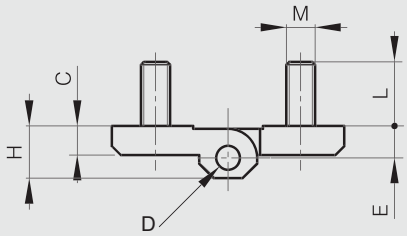

Polyamide hinges combined studs and holes

Hinges are made of 30% GF polyamide, pins are in 304 stainless steel.

Part number	Material	Finish	A	B	C	D	E	F	G	H	L	M	S	Weight (g)
54-1-3033	polyamide	black	40	40	5	4	5.5	25	25	9	11	M5	5.3	50
54-1-3034	polyamide	black	50	50	6	6	6.5	30	30	11.5	15	M6	6.4	50

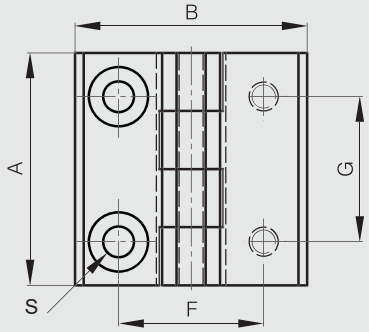

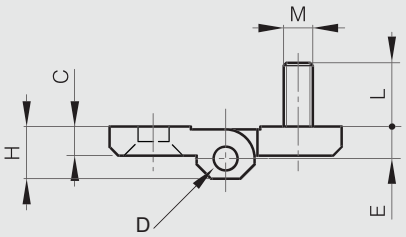

Heavy duty plastic hinge - 180° opening

Nickel plated steel pin. Max. 180° opening.

Part number	Material	Finish	A	B	C	D	Weight (g)
54-1-9000	polyamide	black	108	131	9.5	6	100

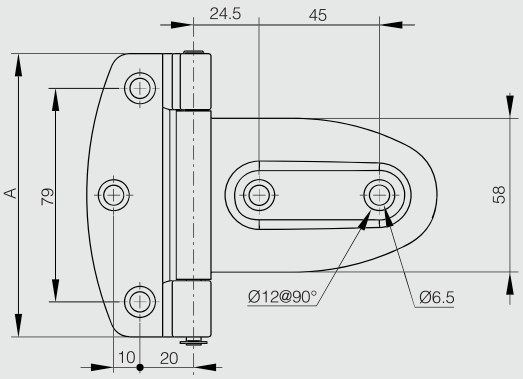

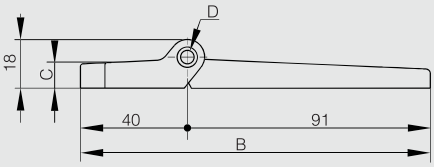

4-hole square polyamide hinge with carbon fibre

NEW

270° POLYMER RoHS

Hinge is made of 30% carbon fibre 6.6 PA.
Pin: 303 stainless steel.

Cycling test : hinge is functional after 10.000 cycles (open/close) for a 80 kg door (dimension 1500 (H) x 750 (W) mm).

	Part number	Material	Finish	A	B	C	D	E	Pin material	Weight (g)
NEW	54-1-3555	polyamide	black	80	80	7.8	7	8.25	303 stainless steel	68

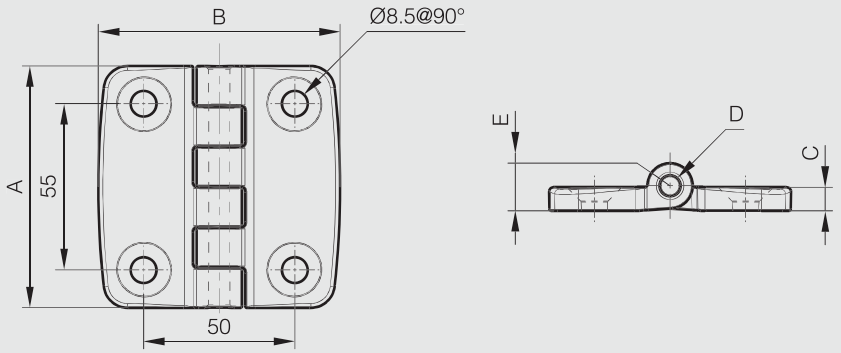

6-hole square polyamide hinges with carbon fibre

NEW

270° POLYMER RoHS

Hinges are made of 30% carbon fibre 6.6 PA.
Pin: 303 stainless steel.

	Part number	Material	Finish	A	B	C	D	E	F	G	H	Pin material	Weight (g)
NEW	54-1-3558	polyamide	black	100	100	7.8	7	8.25	48	75	15	303 stainless steel	95
NEW	54-1-3561	polyamide	black	120	120	8	8	9.3	55	90	17.5	303 stainless steel	140

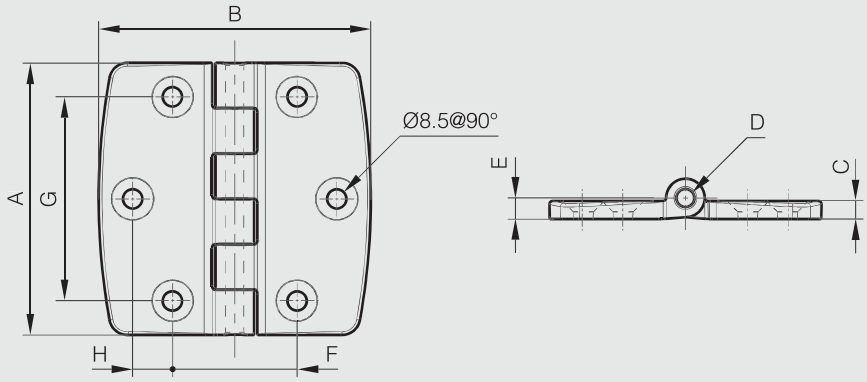

Symetrical polyamide hinges with carbon fibre

NEW

270° POLYMER RoHS

Hinges are made of 30% carbon fibre 6.6 PA.
Pin: 303 stainless steel.

	Part number	Material	Finish	A	B	C	D	E	F	G	H	Pin material	Weight (g)
NS	54-1-3557	polyamide	black	80	160	7.8	7	8.25	50	55	40	303 stainless steel	115
NEW	54-1-3560	polyamide	black	100	200	7.8	7	8.25	48	75	62	303 stainless steel	135
NEW	54-1-3563	polyamide	black	120	240	8	8	9.3	55	90	77.5	303 stainless steel	195

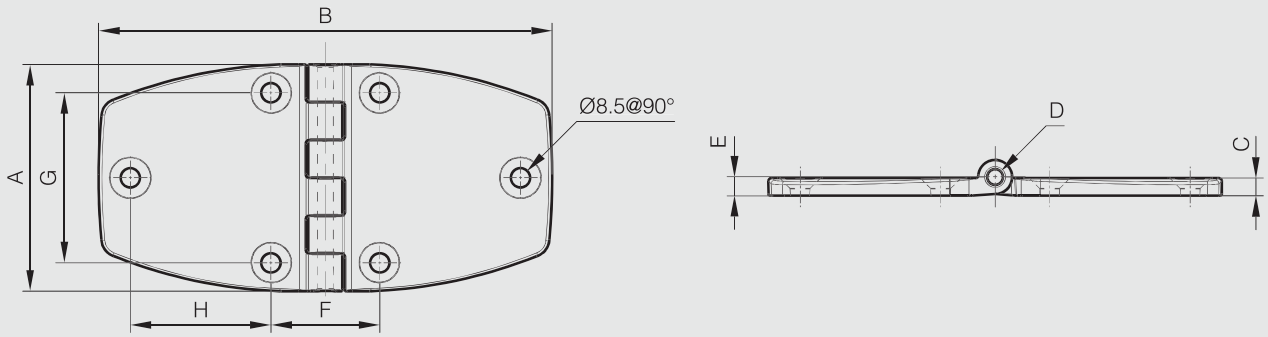

Asymmetrical polyamide hinges with carbon fibre

NEW

270° POLYMER RoHS

Hinges are made of 30% carbon fibre 6.6 PA.
Pin: 303 stainless steel.

	Part number	Material	Finish	A	B	C	D	E	F	G	H	J	K	Pin material	Weight (g)
NS	54-1-3556	polyamide	black	80	120	7.8	7	8.25	50	55	40		40	303 stainless steel	100
NEW	54-1-3559	polyamide	black	100	150	7.8	7	8.25	48	75	62	15	50	303 stainless steel	115
NEW	54-1-3562	polyamide	black	120	180	8	8	9.3	55	90	77.5	17.5	60	303 stainless steel	168

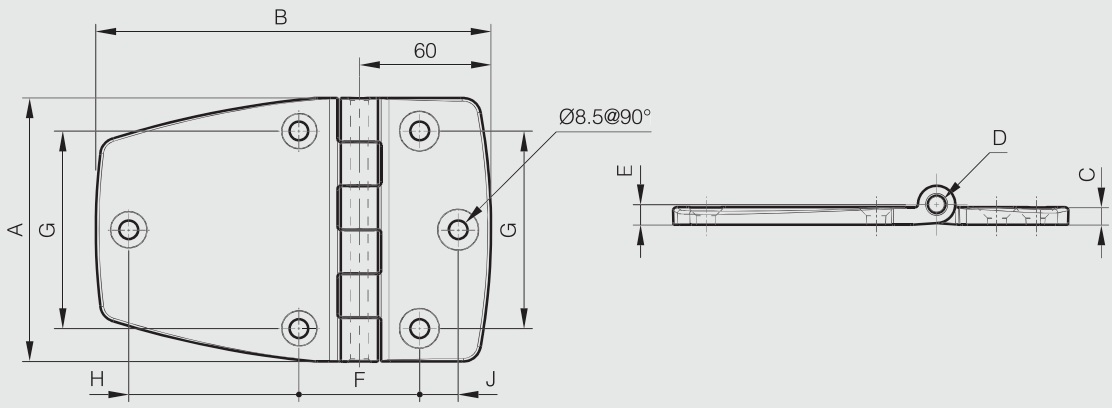

Polymer hinges with pin

Plastic hinge 63.5 mm long

Same material for pin and leaves.

180° POLYMER RoHS

Part number	Material	Finish	A	B	C	S	Note	Weight (g)
54-7-3028	polyethylene	natural	63.5	54	5	6.2	drilled	20

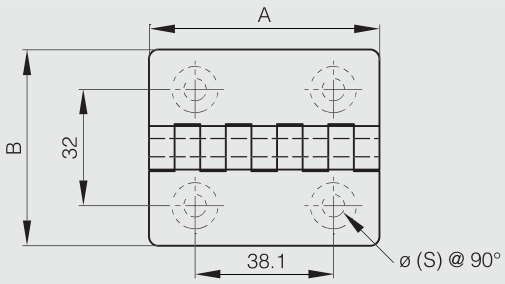

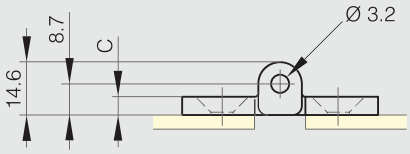

Plastic hinges 63.5 mm long with reversed leaves

Same material for pin and leaves.

180° POLYMER RoHS

Part number	Material	Finish	A	B	C	Weight (g)
54-7-3023	polypropylene	white	63.5	54	5	20
54-7-3027	polycarbonate	transparent	63.5	54	5	26

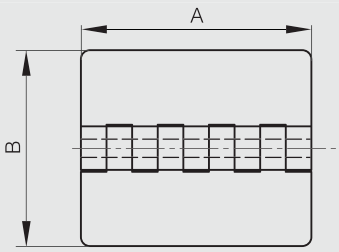

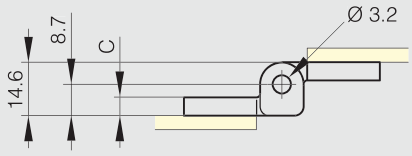

Lift-off hinges in plastic

Hinges are made of 15% GF polyamide, pins are in 303 stainless steel.

Part number	Material	Finish	A	B	C	D	S	Note	Weight (g)
14-7-3722	polyamide	black	74	60	7	9.5	5	type 1	53
14-7-3723	polyamide	black	74	60	7	9.5	5	type 2	53

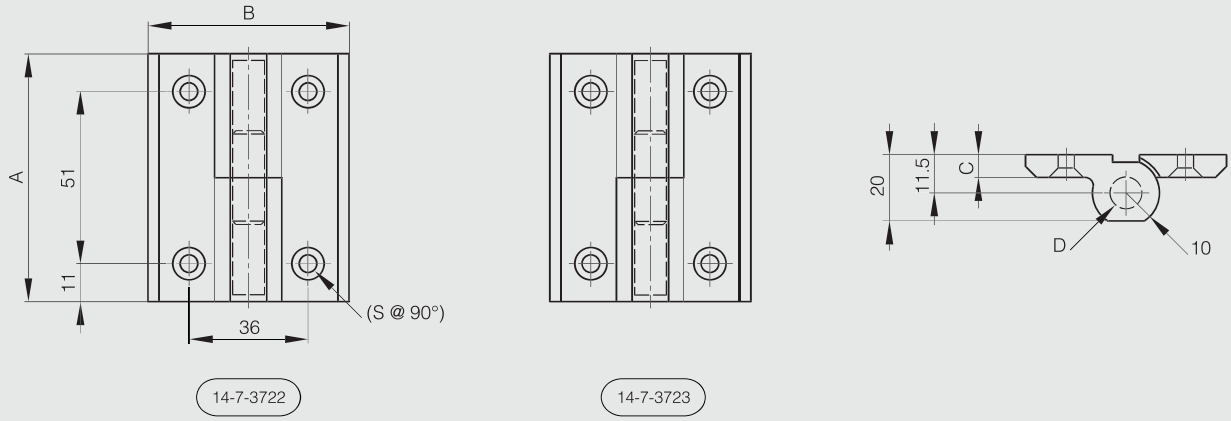

Plastic hinges 25.4 mm long

Technical features:
- Temperature: -40°C up to +80°C.
- Can be fixed with: rivets, screws, nails or clamps.
- Chemical resistance: oil, solvents, sea water and most chemical agents.
- Tensile resistance: 180 N/cm.
- Material offers excellent fatigue resistance.

Part number	Material	Finish	A	B	C	S	Weight (g)
54-7-3000	polypropylene	white	25.4	76.2	3.2	3.2	5
54-7-3002	polypropylene	black	25.4	76.2	3.2	3.2	5

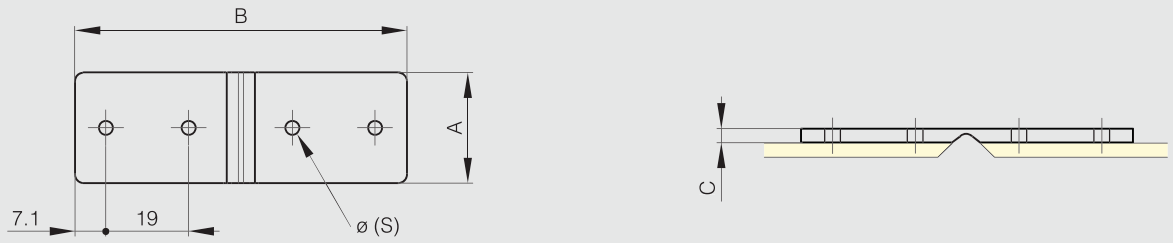

Plastic hinges 38.1 mm and 50.8 mm long

Technical features:
- Temperature: -40°C up to +80°C.
- Can be fixed with: rivets, screws, nails or clamps.
- Chemical resistance: oil, solvents, sea water and most chemical agents.
- Tensile resistance: 180 N/cm.
- Material offers excellent fatigue resistance.

Part number	Material	Finish	A	B	C	F	G	S	Weight (g)
54-7-3006	polypropylene	white	38.1	25.4	1.6	15.9	28.6	3.43	5
54-7-3008	polypropylene	black	38.1	25.4	1.6	15.9	28.6	3.43	5
54-7-3003	polypropylene	white	50.8	38.1	3.2	22.2	33.3	3.43	5
54-7-3005	polypropylene	black	50.8	38.1	3.2	22.2	33.3	3.43	5

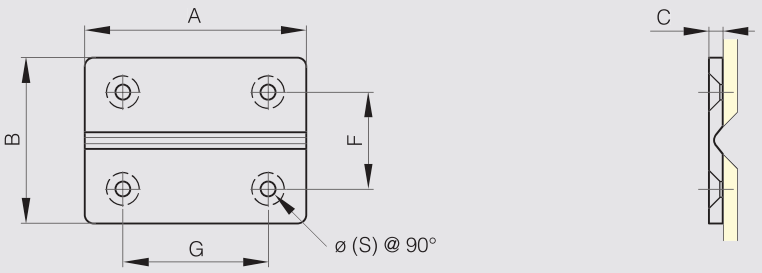

Plastic hinges 76.2 mm long

Technical features:
- Temperature: -40°C up to +80°C.
- Can be fixed with: rivets, screws, nails or clamps.
- Chemical resistance: oil, solvents, sea water and most chemical agents.
- Tensile resistance: 180 N/cm.
- Material offers excellent fatigue resistance.

Part number	Material	Finish	A	B	C	S	Weight (g)
54-7-3009	polypropylene	white	76.2	63.5	4.76	4.62	17
54-7-3011	polypropylene	black	76.2	63.5	4.76	4.62	16

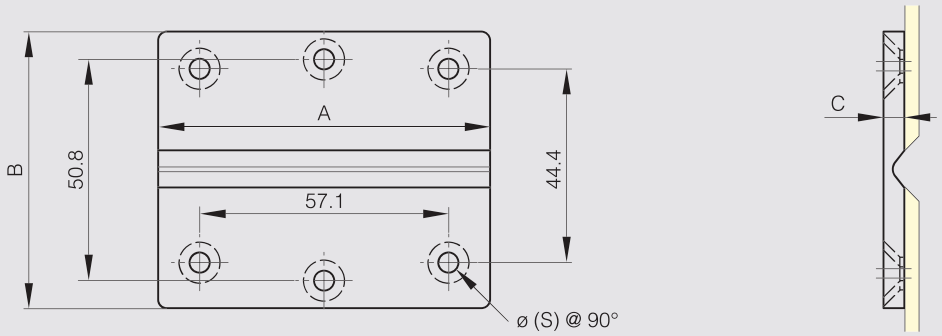

Plastic hinges 88.9 mm and 101.6 mm long

Technical features:
- Temperature: -40°C up to +80°C.
- Can be fixed with: rivets, screws, nails or clamps
- Chemical resistance: oil, solvents, sea water and most chemical agents.
- Tensile resistance: 180 N/cm.
- Material offers excellent fatigue resistance.

Part number	Material	Finish	A	B	C	E	F	G	H	S	Weight (g)
54-7-3012	polypropylene	white	88.9	88.9	6.35	71.4	54	73		6	37
54-7-3014	polypropylene	black	88.9	88.9	6.35	71.4	54	73		6	35
54-7-3015	polypropylene	white	101.6	101.6	6.35	79.4	54	83.4	27.8	8	50
54-7-3017	polypropylene	black	101.6	101.6	6.35	79.4	54	83.4	27.8	8	50

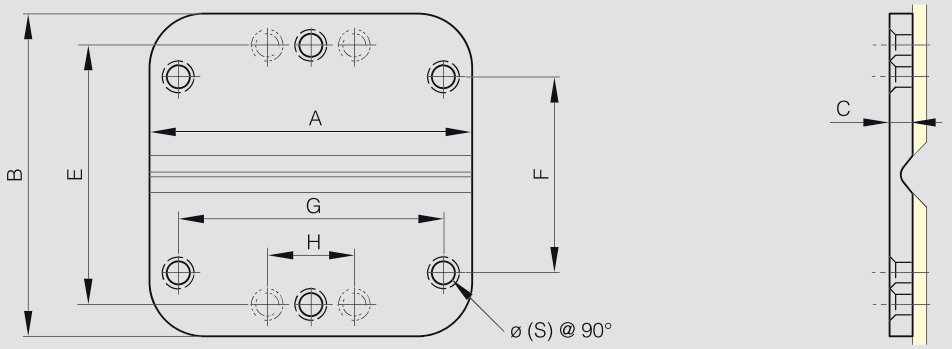

Polymer continuous hinges in 15.25 meter rolls

Technical features:
- Temperature: -40°C up to +80°C.
- Can be fixed with: rivets, screws, nails or clamps.
- Chemical resistance: oil, solvents, sea water and most chemical agents.
- Tensile resistance: 180 N/cm.
- Material offers excellent fatigue resistance.

Part number	Material	Finish	B	C	Weight (g)
44-7-3000	polypropylene	white	28.6	3.2	1080
44-7-3001	polypropylene	grey	28.6	3.2	1080
44-7-3002	polypropylene	black	28.6	3.2	1080
44-7-3003	polypropylene	white	38.1	3.2	1450
44-7-3004	polypropylene	grey	38.1	3.2	1450
44-7-3005	polypropylene	black	38.1	3.2	1450
44-7-3006	polypropylene	white	50.8	3.2	2300
44-7-3007	polypropylene	grey	50.8	3.2	2300
44-7-3008	polypropylene	black	50.8	3.2	2300
44-7-3009	polypropylene	white	76.2	3.2	3100
44-7-3010	polypropylene	grey	76.2	3.2	3100
44-7-3011	polypropylene	black	76.2	3.2	3100

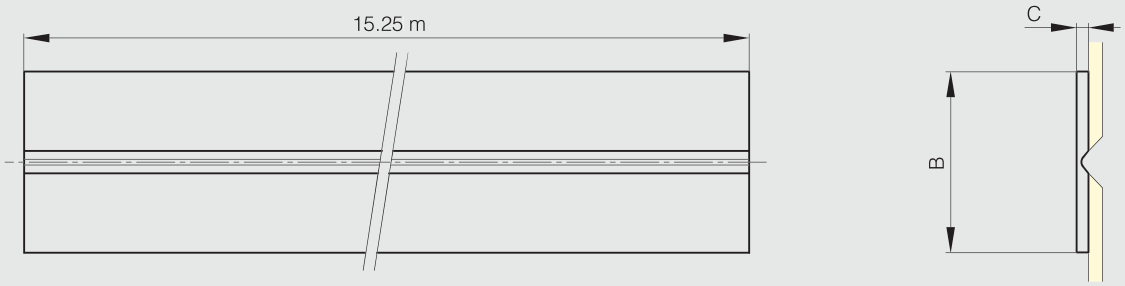

Square design stainless steel hinge

Hinges: 304 stainless steel.
Pin: 304 stainless steel.

Models equivalent to square design polyamide hinges (part number 54-1-3565 and 54-1-3566).

	Part number	Material	Finish	A	B	C	D	E	F	G	S	Weight (g)
NEW	72-1-4416	304 stainless steel	brightened	40	40	5.2	4	5.7	25	25	5.3	60
NEW	72-1-4417	304 stainless steel	brightened	50	50	5.9	5	6.4	30	30	6.4	100

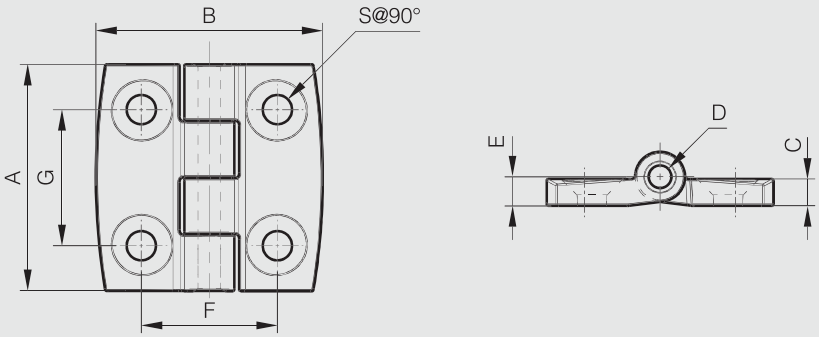

Hinge 30 x 30 mm

Part number	Material	Finish	A	B	C	D	S	Weight (g)
52-1-4038	304 stainless steel	raw	30	30	0.8	2	3.3	8

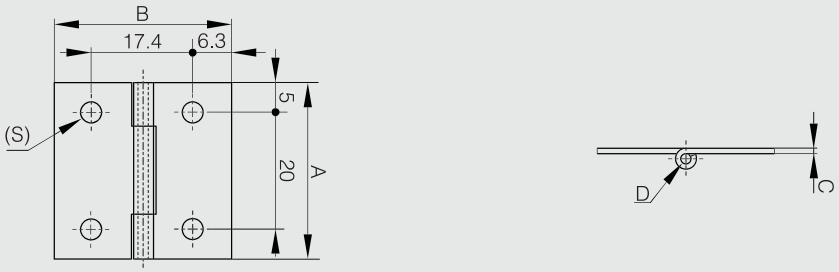

Square hinges with two offset leaves and removable pin - no holes

Removable pin.

Part number	Material	Finish	A	B	C	D	Weight (g)
50-7-3347	steel	raw	40	40	2	4	36
50-7-3348	steel	raw	50	50	2	6	64
50-7-3349	steel	raw	60	60	2	6	84
50-7-3350	steel	raw	70	70	2	6	112

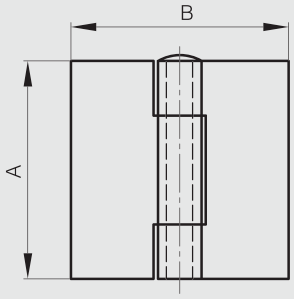

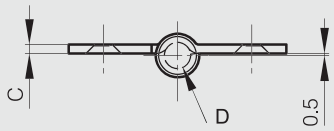

Square hinges with two offset leaves and removable pin - with 4 holes

Removable pin.

	Part number	Material	Finish	A	B	C	D	F	G	S	Weight (g)
NEW	50-1-3580	steel	zinc plated	40	40	2	4	7	24	4.3	34
NEW	50-1-3581	steel	zinc plated	50	50	2	6	8	34	5	61
NEW	50-1-3582	steel	zinc plated	60	60	2	6	8	40	4.5	85
	52-1-3608	304 stainless steel	raw	40	40	2	4	8	24	4	34
	52-1-3610	304 stainless steel	raw	50	50	2	6	8	34	4.5	61
	52-1-3612	304 stainless steel	raw	60	60	2	6	8	40	4.5	82

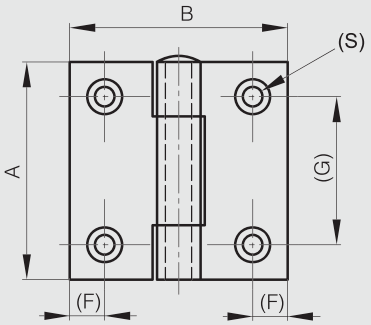

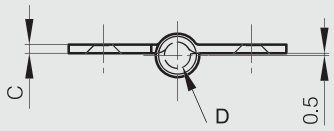

Square hinges with two offset leaves and removable pin - with 6 holes

Removable pin.

	Part number	Material	Finish	A	B	C	D	F	G	H	S	Note	Weight (g)
	50-7-3583	steel	zinc plated	70	70	2	6	8	50	10	4		156
	50-7-3584	steel	zinc plated	80	80	2.5	6	8	60	12.5	4		168
	52-1-3614	304 stainless steel	raw	70	70	2	6	8	50	10	4.5		156
NS	52-1-4107	304 stainless steel	raw	70	70	2	6	8	50	10	4.5	with M5 studs	174
	52-1-3616	304 stainless steel	raw	80	80	2.5	6	8	60	12.5	4.5		164
NS	52-1-4110	304 stainless steel	raw	80	80	2.5	6	8	60	12.5	4.5	with M5 studs	182

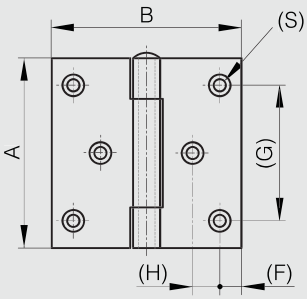

52-1-3614 & 52-1-3616

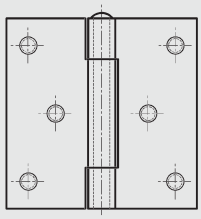

52-1-4107 & 52-1-4110

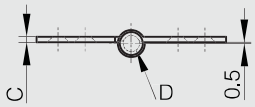

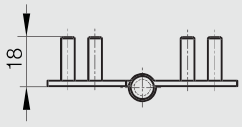

Square hinges with two offset leaves and riveted pin - with 4 holes

Riveted pin.

Part number	Material	Finish	A	B	C	D	F	G	S	Weight (g)
52-1-3609	304 stainless steel	raw	40	40	2	4	8	24	4	34
52-1-3611	304 stainless steel	raw	50	50	2	6	8	34	4.5	61
52-1-3613	304 stainless steel	raw	60	60	2	6	8	40	4.5	82
52-1-3872	316L stainless steel	raw	40	40	2	4	8	24	4	34
52-1-3709	316L stainless steel	raw	50	50	2	6	8	34	4.5	61
52-1-3873	316L stainless steel	raw	60	60	2	6	8	40	4.5	82

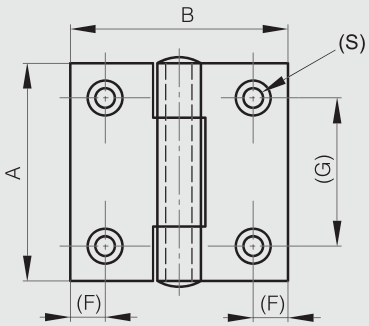

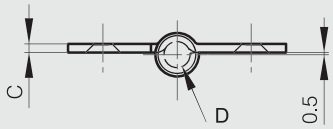

Square hinges with two offset leaves and riveted pin - with 6 holes

NEW

270° STAINLESS STEEL RoHS

Riveted pin.

	Part number	Material	Finish	A	B	C	D	F	G	H	S	Note	Weight (g)
	52-1-3615	304 stainless steel	raw	70	70	2	6	8	50	10	4.5		156
NS	52-1-4108	304 stainless steel	raw	70	70	2	6	8	50	10	4.5	with M5 studs	174
	52-1-3617	304 stainless steel	raw	80	80	2.5	6	8	60	12.5	4.5		164
NS	52-1-4111	304 stainless steel	raw	80	80	2.5	6	8	60	12.5	4.5	with M5 studs	182

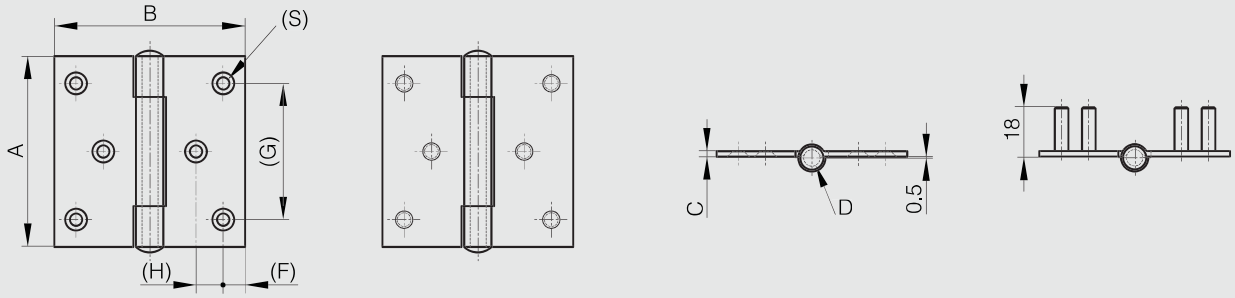

52-1-3615 & 52-1-3617

52-1-4108 & 52-1-4111

Square hinges with no offset leaf and riveted pin - no holes

270° STAINLESS STEEL STEEL RoHS

Riveted pin.

Part number	Material	Finish	A	B	C	D	Weight (g)
50-1-3916	steel	raw	40	40	2	4	36
50-1-3917	steel	raw	50	50	2	6	63
50-1-3648	steel	raw	50	50	2.5	4.5	75
50-1-3918	steel	raw	60	60	2	6	84
50-1-3919	steel	raw	70	70	2	6	112
50-1-3920	steel	raw	80	80	2.5	6	169
50-1-3921	steel	raw	100	100	2.5	6	248
52-1-3679	304 stainless steel	raw	40	40	2	4	37
52-1-3694	304 stainless steel	raw	50	50	2	6	62
52-1-3695	304 stainless steel	raw	60	60	2	6	82
52-1-3864	304 stainless steel	raw	70	70	2	6	112
52-1-3865	304 stainless steel	raw	80	80	2.5	6	168
52-1-3866	304 stainless steel	raw	100	100	2.5	6	250
52-1-3869	316L stainless steel	raw	40	40	2	4	37
52-1-3870	316L stainless steel	raw	50	50	2	6	61
52-1-3871	316L stainless steel	raw	60	60	2	6	90

Square hinges with no offset leaf and riveted pin - with 4 holes

Riveted pin.

Part number	Material	Finish	A	B	C	D	F	G	S	Weight (g)
52-1-3861	304 stainless steel	raw	40	40	2	4	8	24	4	35
52-1-3862	304 stainless steel	raw	50	50	2	6	8	34	4.5	61
52-1-3863	304 stainless steel	raw	60	60	2	6	8	40	4.5	83
52-1-3874	316L stainless steel	raw	40	40	2	4	8	24	4	35
52-1-3710	316L stainless steel	raw	50	50	2	6	8	34	4.5	62
52-1-3875	316L stainless steel	raw	60	60	2	6	8	40	4.5	85

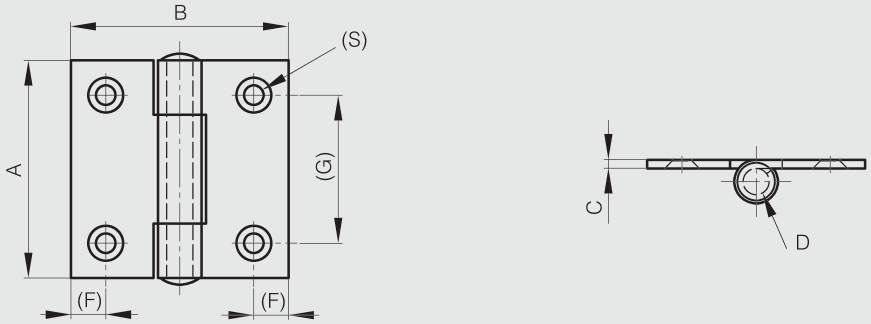

Square hinges with no offset leaf and riveted pin - with 6 holes

NEW

Riveted pin.

	Part number	Material	Finish	A	B	C	D	F	G	H	S	Note	Weight (g)
	52-1-3867	304 stainless steel	raw	70	70	2	6	8	50	10	4.5		110
NS	52-1-4109	304 stainless steel	raw	70	70	2	6	8	50	10	4.5	with M5 studs	128
	52-1-3868	304 stainless steel	raw	80	80	2.5	6	8	60	12.5	4.5		166
NS	52-1-4112	304 stainless steel	raw	80	80	2.5	6	8	60	12.5	4.5	with M5 studs	184

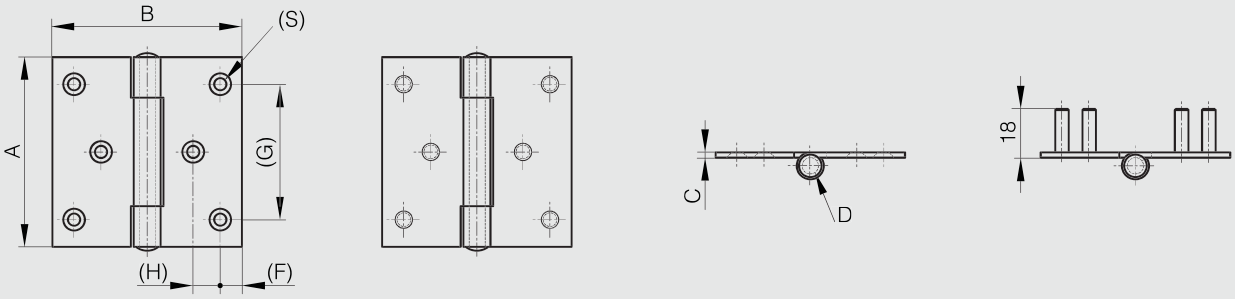

52-1-3867 & 52-1-3868

52-1-4109 & 52-1-4112

Hinge with nylon washers

270° STAINLESS STEEL

Teflon plated pin in 304 stainless steel blocked with 2 punches.
4 nylon washers.
Produced mainly in stainless steel, for a complete description of the materials contact us.

Part number	Material	Finish	A	B	C	D	E	F	G	S	Weight (g)
52-1-3790	304 stainless steel	raw	75	80	2	6	10.5	6	52	7.5	120

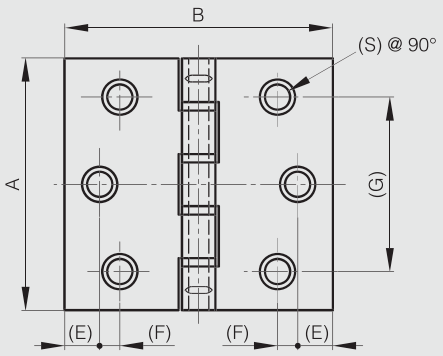

Hinge with oblong holes

270° STEEL RoHS

Part number	Material	Finish	A	B	C	D	S	Weight (g)
50-1-3312	steel	zinc plated	65	70	2	4	6.7	82

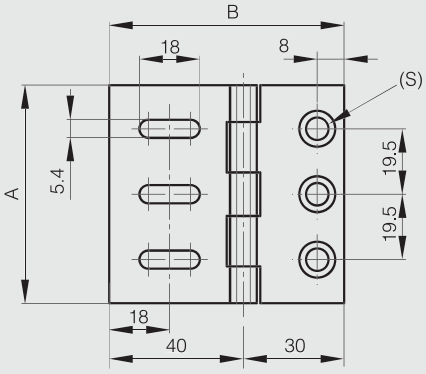

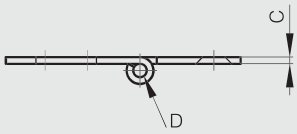

Mini brass-plated steel hinges 15 x 9 mm

NEW

180° STEEL RoHS

Mini brass-plated steel hinges 15x9 mm

Sold in box of 100 units.
Weight per box.

	Part number	Material	Finish	A	B	C	D	S	Pin material	Weight (g)
NEW	50-7-4273	steel	brass-plated	15	9	0.4	1.15	1	steel	90

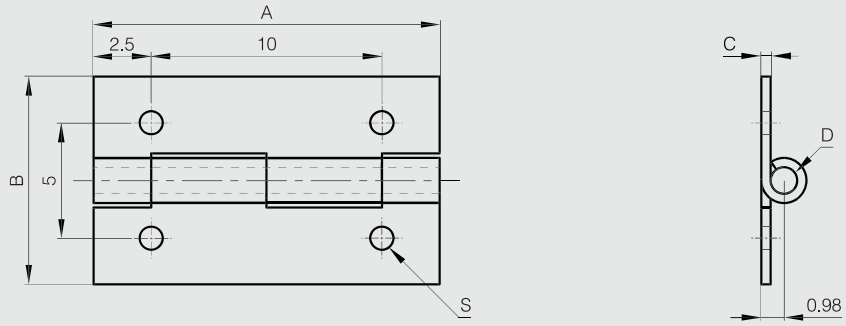

Mini brass-plated steel hinges 16 x 12 mm

NEW

180° STEEL RoHS

Mini brass-plated steel hinges 16x12 mm

Sold in box of 100 units.
Weight per box.

	Part number	Material	Finish	A	B	C	D	S	Pin material	Weight (g)
NEW	50-7-4274	steel	brass-plated	16	12	0.4	1.15	1.5	steel	110

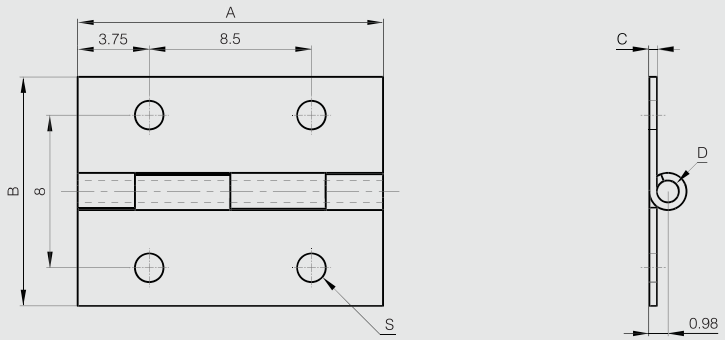

Mini brass-plated steel hinges 20 x 14 mm

NEW

180° STEEL RoHS

Mini brass-plated steel hinges 20x14 mm

Sold in box of 100 units.
Weight per box.

	Part number	Material	Finish	A	B	C	D	S	Pin material	Weight (g)
NEW	50-7-4276	steel	brass-plated	20	14	0.4	1.15	1.75	steel	140

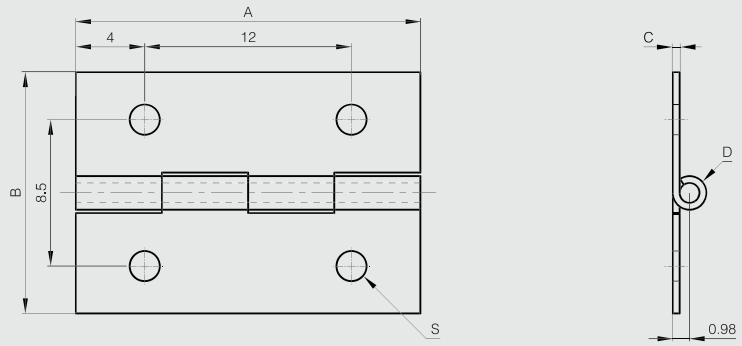

Mini brass-plated steel hinges 25 x 12 mm

NEW

180° STEEL RoHS

Mini brass-plated steel hinges 25x12 mm

Sold in box of 100 units.
Weight per box.

	Part number	Material	Finish	A	B	C	D	S	Pin material	Weight (g)
NEW	50-7-4275	steel	brass-plated	25	12	0.4	1.15	1.25	steel	170

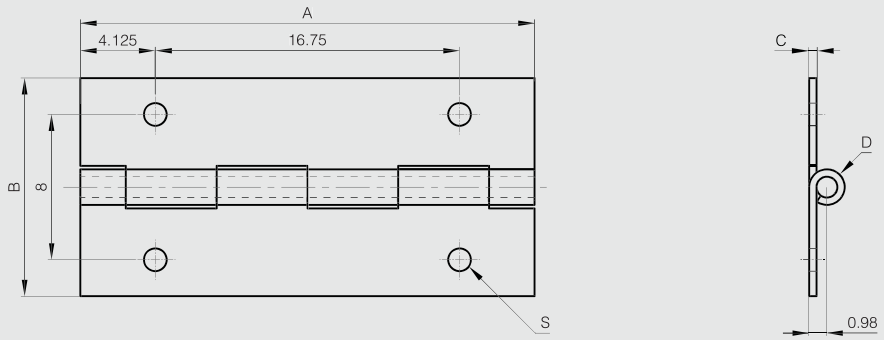

Mini brass-plated steel hinges 25 x 16 mm

Mini brass-plated steel hinges 25x16 mm

Sold in box of 100 units.
Weight per box.

	Part number	Material	Finish	A	B	C	D	S	Pin material	Weight (g)
NEW	50-7-4277	steel	brass-plated	25	16	0.5	1.15	1.75	steel	200

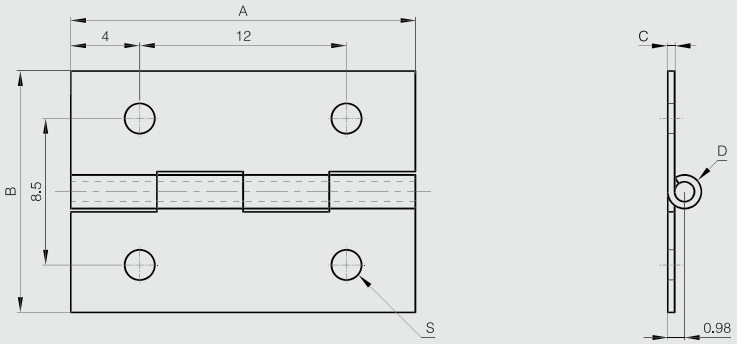

Hinge 50 x 30 mm

Drilled hinge with riveted pin.

Part number	Material	Finish	A	B	C	D	F	G	S	Weight (g)
52-1-3571	304 stainless steel	raw	50	30	1	3	6.5	35	3.5	18

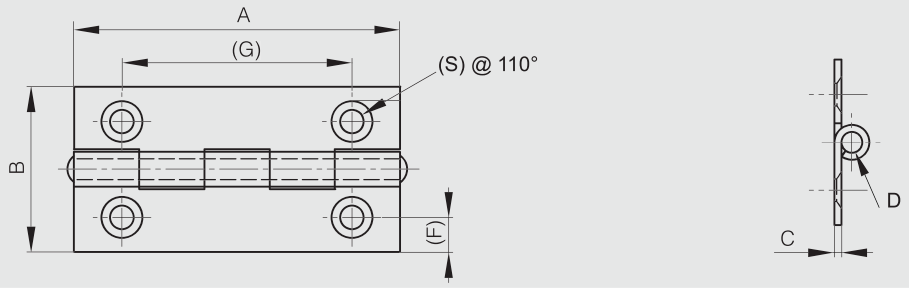

Hinges 50 x 40 mm

Available in 2 versions: with holes or countersunk holes

Part number	Material	Finish	A	B	C	D	F	G	S	Note	Weight (g)
50-1-3525	steel	zinc plated	50	40	1.2	3	8.5	36	5	drilled	26
50-1-3526	steel	zinc plated	50	40	1.2	3	8.5	36	5	countersunk version	24
52-1-3592	304 stainless steel	raw	50	40	1.2	3	8.5	36	5	countersunk version	24
52-1-3607	304 stainless steel	raw	50	40	1.2	3	8.5	36	5	drilled	25

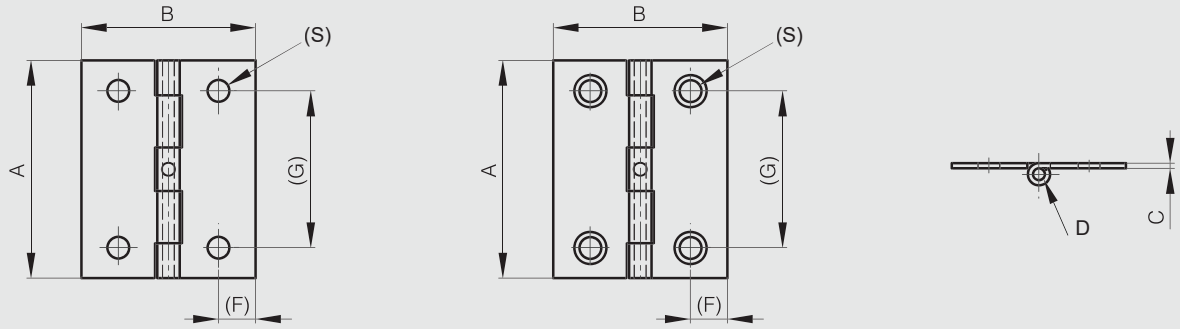

Hinges 60 x 35 mm

270° STAINLESS STEEL RoHS

Part number	Material	Finish	A	B	C	D	S	Note	Weight (g)
52-1-4009	304 stainless steel	raw	60	35	1	2	4	countersunk version	20
52-1-4051	304 stainless steel	raw	60	35	1	2	4	drilled	21

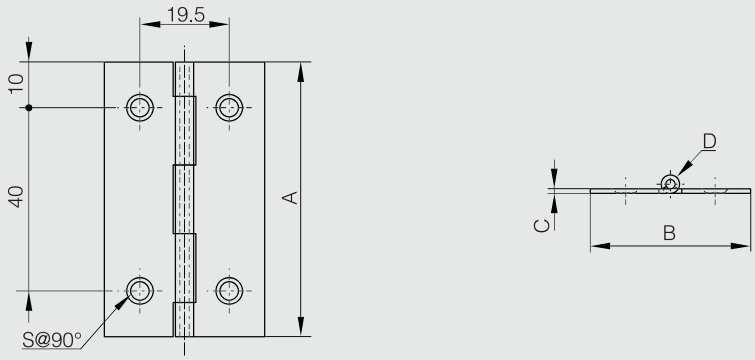

Hinge 62 x 44 mm

270° STEEL RoHS

Part number	Material	Finish	A	B	C	D	Weight (g)
50-1-3309	steel	raw	62	44	2	4.9	53

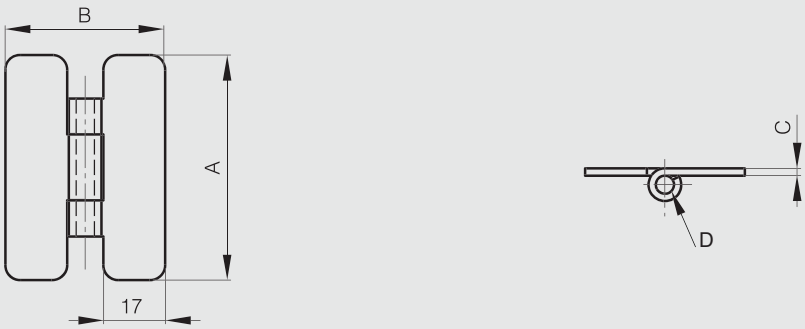

Hinge 75 x 40 mm

270° STAINLESS STEEL RoHS

Part number	Material	Finish	A	B	C	D	E	F	G	Weight (g)
52-1-3990	304 stainless steel	raw	75	40	1.5	3	6	7.5	48	46

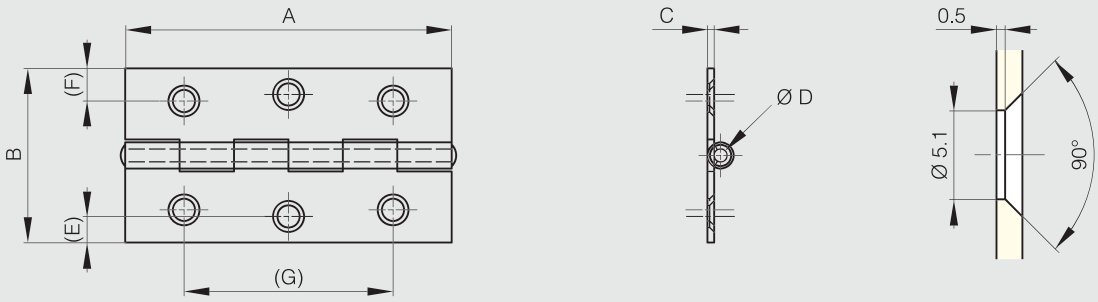

Small hinges 30 to 50 mm long

270° STEEL RoHS

Part number	Material	Finish	A	B	C	D	F	G	S	Note	Weight (g)
50-7-3618	steel	raw	30	19	1	2.4				undrilled / 3 knuckles	6
50-7-3617	steel	raw	30	19	1	2.4	4	19	3.3	drilled / 3 knuckles	6
50-7-3557	steel	raw	35	21.8	0.8	2.4				undrilled / headed pin / 5 knuckles	8
50-7-3549	steel	raw	35	21.8	0.8	2.4	4.2	22	3.5	drilled / headed pin / 5 knuckles	7
50-7-3550	steel	raw	40	25	0.9	2.7	4.5	27	3.2	drilled / headed pin / 5 knuckles	11
50-7-3551	steel	raw	50	29	1	2.4	7	35.2	3.9	drilled / 5 knuckles	16

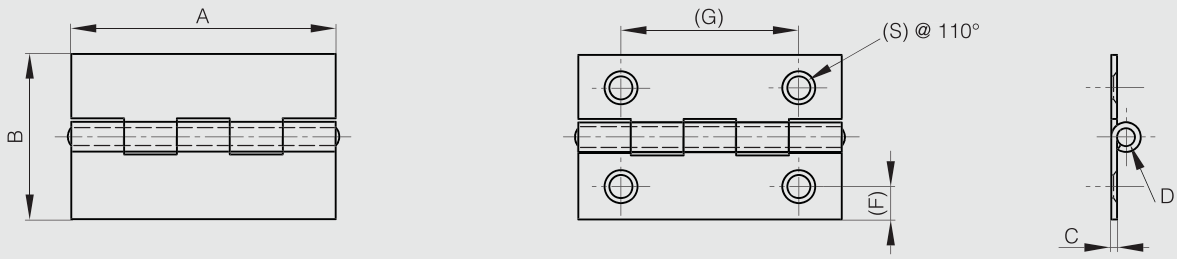

Hinges 60 to 100 mm long

All hinges have headed pins except 50-7-3552, 50-7-3553, 50-7-3554.

	Part number	Material	Finish	A	B	C	D	F	G	S	Note	Weight (g)
	50-7-3560	steel	raw	60	34.8	1	3				undrilled / headed pin / 5 knuckles	23
	50-7-3552	steel	raw	60.5	36.4	1	3.5	8.75	44	3.9	drilled / 6 knuckles	23
	50-7-3553	steel	raw	70	41.5	1	3.5	8.7	52	4.5	drilled / 7 knuckles	39
	50-7-3554	steel	raw	80.5	45.4	1	3.5	9.6	59.3	4.6	drilled / 8 knuckles	47
NEW	50-1-3564	steel	raw	100	50	1.5	5				undrilled / headed pin / 5 knuckles	92
NEW	50-1-3556	steel	raw	100	50	1.5	5	9.7	77	5.5	drilled / headed pin / 5 knuckles	89

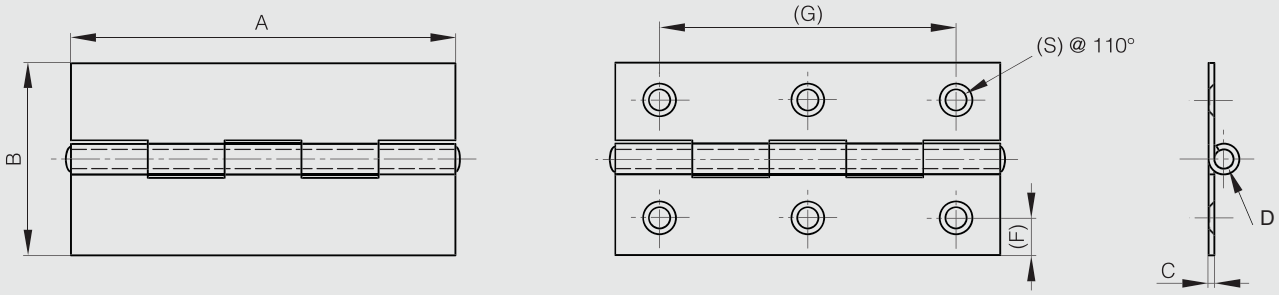

Hinge 100 x 84 mm

304 stainless steel riveted pin.

Part number	Material	Finish	A	B	C	D	S	Weight (g)
50-1-4174	steel	zinc plated	100	84	3	6	5.5	250

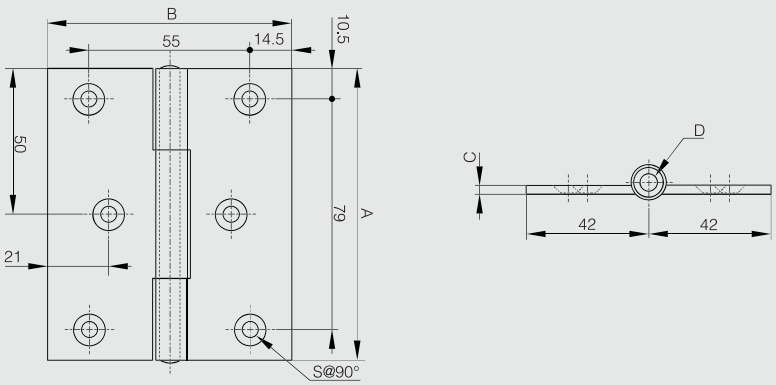

Small FinAlu® hinges

Small hinges in aluminium profile with a small pin diameter.
This nice design can be used in many applications: (medical, electronic enclosures, food equipment, transportation...).
These drilled hinges have same features as FinAlu® continuous hinges.
They have the similar dimensions to hinges used in the aircraft industry.

	Part number	Material	Finish	A	B	C	D	E	F	G	S	Pin material	Weight (g)
NEW	72-1-4298	6082 T5 alu	clear anodised	38	31.75	1.3	2.2	2.29	20	22	4.3	stainless steel	7
NS	72-1-4350	6082 T5 alu	blue anodised	38	31.75	1.3	2.2	2.29	20	22	4.3	stainless steel	5
NS	72-1-4351	6082 T5 alu	red anodised	38	31.75	1.3	2.2	2.29	20	22	4.3	stainless steel	5
NS	72-1-4352	6082 T5 alu	bronze anodised	38	31.75	1.3	2.2	2.29	20	22	4.3	stainless steel	5
NS	72-1-4353	6082 T5 alu	gold anodised	38	31.75	1.3	2.2	2.29	20	22	4.3	stainless steel	5
NEW	72-1-4420	6082 T5 alu	clear anodised	40	38.1	1.3	2.2	2.29	24	24	4.3	stainless steel	10
NEW	72-1-4299	6082 T5 alu	clear anodised	50	44.45	1.3	2.2	2.29	30	34	4.3	stainless steel	10
NS	72-1-4354	6082 T5 alu	blue anodised	50	44.45	1.3	2.2	2.29	30	34	4.3	stainless steel	9
NS	72-1-4355	6082 T5 alu	red anodised	50	44.45	1.3	2.2	2.29	30	34	4.3	stainless steel	9
NS	72-1-4356	6082 T5 alu	bronze anodised	50	44.45	1.3	2.2	2.29	30	34	4.3	stainless steel	9
NS	72-1-4357	6082 T5 alu	gold anodised	50	44.45	1.3	2.2	2.29	30	34	4.3	stainless steel	9
NEW	72-1-4300	6082 T5 alu	clear anodised	63.5	63.5	1.3	2.2	2.29	40	40	6	stainless steel	18
NS	72-1-4358	6082 T5 alu	blue anodised	63.5	63.5	1.3	2.2	2.29	40	40	6	stainless steel	15
NS	72-1-4359	6082 T5 alu	red anodised	63.5	63.5	1.3	2.2	2.29	40	40	6	stainless steel	15
NS	72-1-4360	6082 T5 alu	bronze anodised	63.5	63.5	1.3	2.2	2.29	40	40	6	stainless steel	15
NS	72-1-4361	6082 T5 alu	gold anodised	63.5	63.5	1.3	2.2	2.29	40	40	6	stainless steel	15

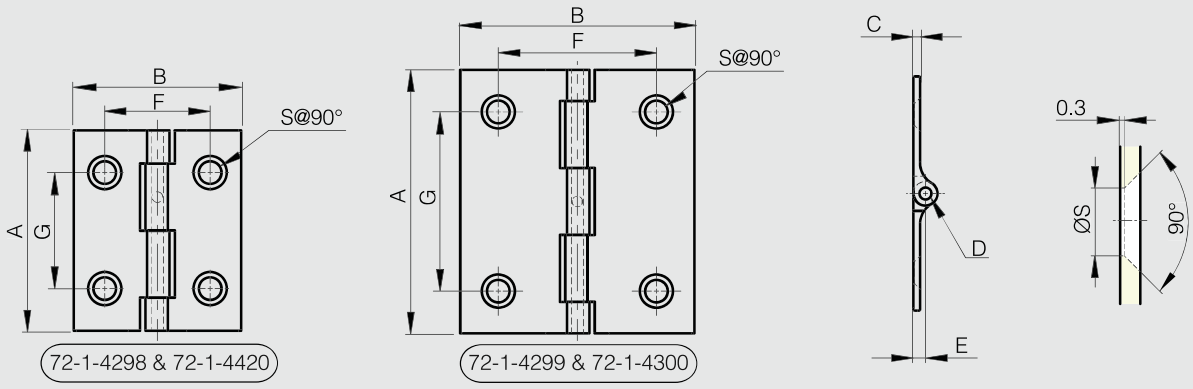

Aluminium profile hinges 30 x 35 mm

NEW

270° ALU RoHS

Free-swinging hinge.
It has the same footprint and design as our friction, detent and spring hinges.
All are fully interchangeable.
Plastic pin.

	Part number	Material	Finish	A	B	C	D	Weight (g)
NEW	72-1-4301	6060 T5 alu	clear anodised	30	35	3.3	8	10
NEW	72-1-4302	6060 T5 alu	black anodised	30	35	3.3	8	10

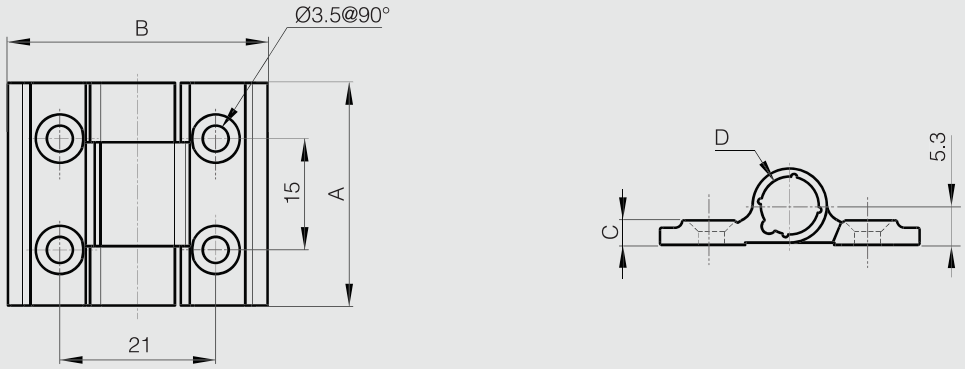

Aluminium profile hinges 60 x 35 mm

NEW

270° ALU RoHS

	Part number	Material	Finish	A	B	C	D	Weight (g)
NEW	72-1-4396	6060 T5 alu	clear anodised	60	35	3.3	8	18
NEW	72-1-4397	6060 T5 alu	black anodised	60	35	3.3	8	18

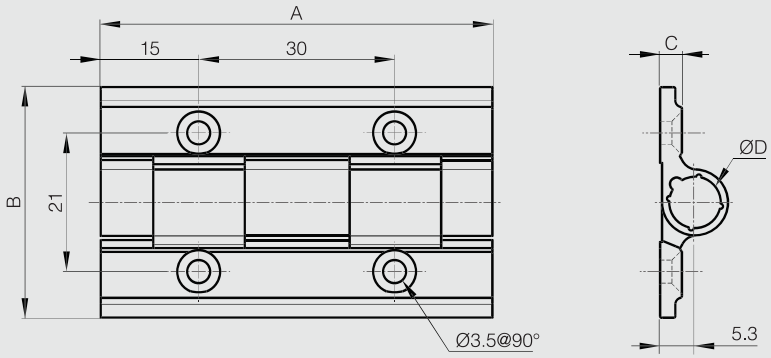

Aluminium profile hinges 90 x 35 mm

NEW

270° ALU RoHS

	Part number	Material	Finish	A	B	C	D	Weight (g)
NEW	72-1-4398	6060 T5 alu	clear anodised	90	35	3.3	8	29
NEW	72-1-4399	6060 T5 alu	black anodised	90	35	3.3	8	29

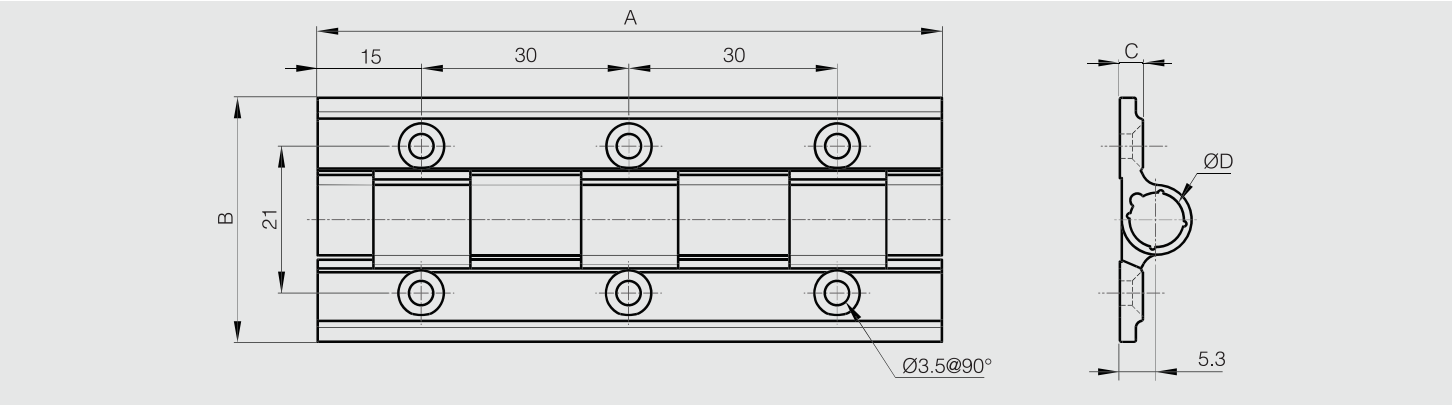

Aluminium profile hinges 120 x 35 mm

NEW

270° ALU RoHS

	Part number	Material	Finish	A	B	C	D	Weight (g)
NEW	72-1-4400	6060 T5 alu	clear anodised	120	35	3.3	8	38
NEW	72-1-4401	6060 T5 alu	black anodised	120	35	3.3	8	38

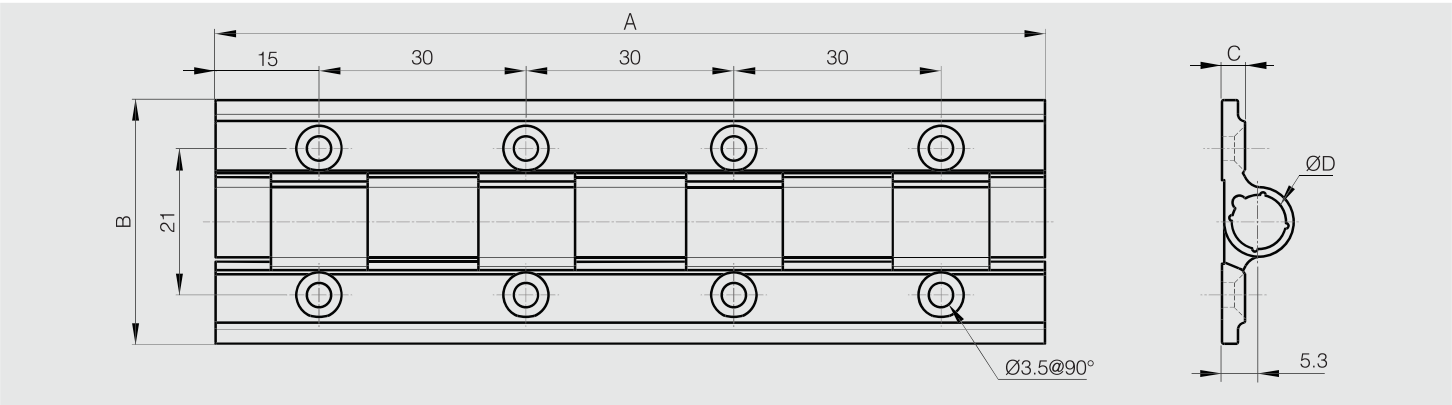

Aluminium profile hinges - diameter 13

180° ALU RoHS

This hinge has the same footprint and design as our friction, detent and spring hinges.
All are fully interchangeable.
Plastic pin with or without end caps.

Part number	Material	Finish	A	B	C	D	Note	Weight (g)
72-1-4212	6060 T5 alu	clear anodised	65	55	4.5	13	without cap	130
72-1-4213	6060 T5 alu	black anodised	65	55	4.5	13	without cap	130
72-1-4214	6060 T5 alu	clear anodised	65	55	4.5	13	with cap	130
72-1-4215	6060 T5 alu	black anodised	65	55	4.5	13	with cap	130

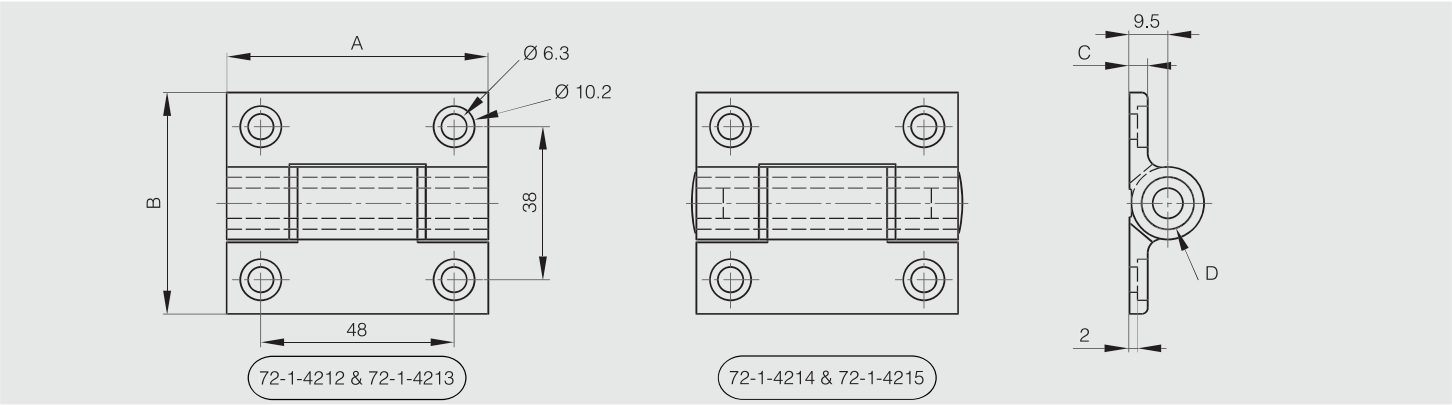

Heavy duty aluminium profile hinges

270° ALU RoHS

Free swinging hinge.
It has the same footprint and design as the spring hinge for heavy duty applications (part numbers: 72-1-4231, 72-1-4232, 72-1-4258 and 72-1-4259).
All are fully interchangeable.

Part number	Material	Finish	A	B	C	D	Weight (g)
72-1-4241	6082 T5 alu	clear anodised	100	82.5	5.5	24	149
72-1-4242	6082 T5 alu	black anodised	100	82.5	5.5	24	150

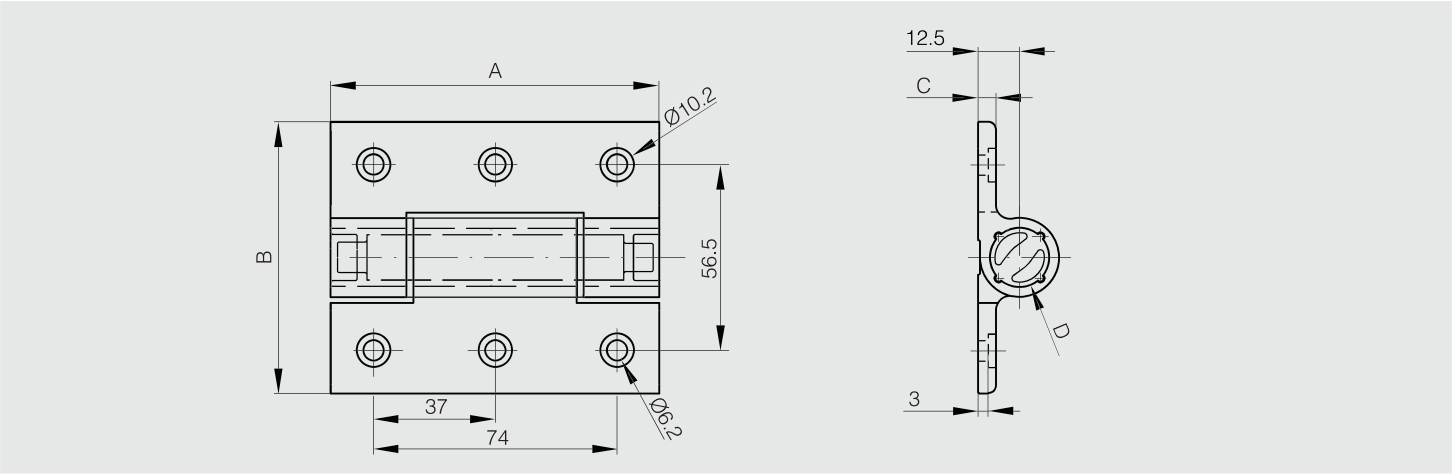

Aluminium hinges - 50 mm width

Hinge with 304 stainless steel riveted pin.

Part number	Material	Finish	A	B	C	D	Weight (g)
72-1-3635	6060 T5 alu	raw	32	50	3	5.2	20
72-1-3636	6060 T5 alu	raw	50	50	3	5.2	30

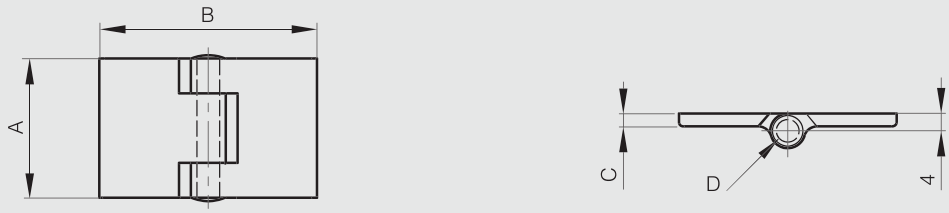

Aluminium hinges with reversed leaves - 50 mm width

Hinge with 304 stainless steel riveted pin.

Part number	Material	Finish	A	B	C	D	Weight (g)
72-1-3637	6060 T5 alu	raw	32	50	3	5.2	20
72-1-3638	6060 T5 alu	raw	50	50	3	5.2	30

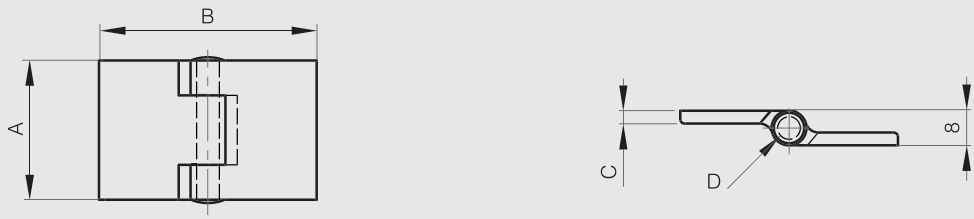

Clean room lift-off hinges 65 x 60 mm

270° ALU RoHS

No metal-to-metal contact. Polyacetal bushings minimize particles.
Door size: max. W600 x L800.
Door weight: max. 8 kg/pair.
303 stainless steel pin.

Part number	Material	Finish	A	B	C	D	G	S	Note	Weight (g)
14-7-3877	aluminium	anodised	65	60	3.5	5	40	5.5	type 1	49
14-7-3878	aluminium	anodised	65	60	3.5	5	40	5.5	type 2	49

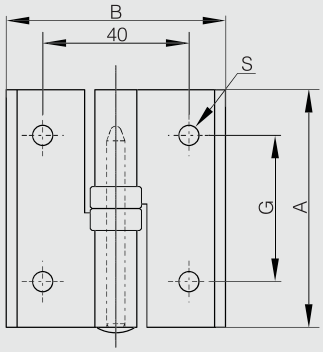

14-7-3877

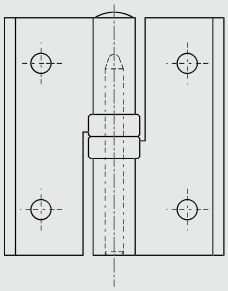

14-7-3878

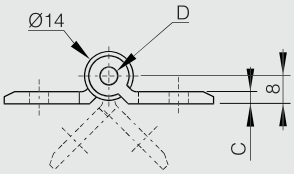

Aluminium lift-off hinges 80 x 80 mm

270° ALU RoHS

Zinc plated steel pin.
Nylon bushing.

Part number	Material	Finish	A	B	C	D	S	Note	Weight (g)
14-7-3624	aluminium	anodised silver	80	80	3.5	8	5.5	type 1	85
14-7-3625	aluminium	anodised silver	80	80	3.5	8	5.5	type 2	85

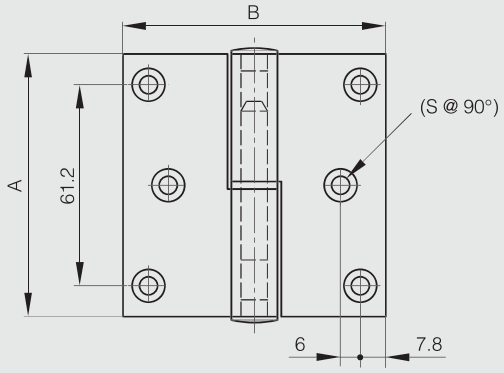

14-7-3624

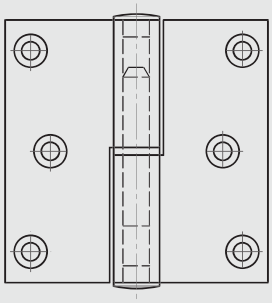

14-7-3625

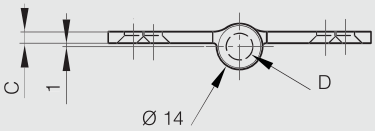

Aluminium lift-off hinges 100 x 100 mm

270° ALU RoHS

Zinc plated steel pin.
Nylon bushing.

Part number	Material	Finish	A	B	C	D	S	Note	Weight (g)
14-7-3628	aluminium	anodised silver	100	100	4	9	6	type 1	106
14-7-3629	aluminium	anodised silver	100	100	4	9	6	type 2	106

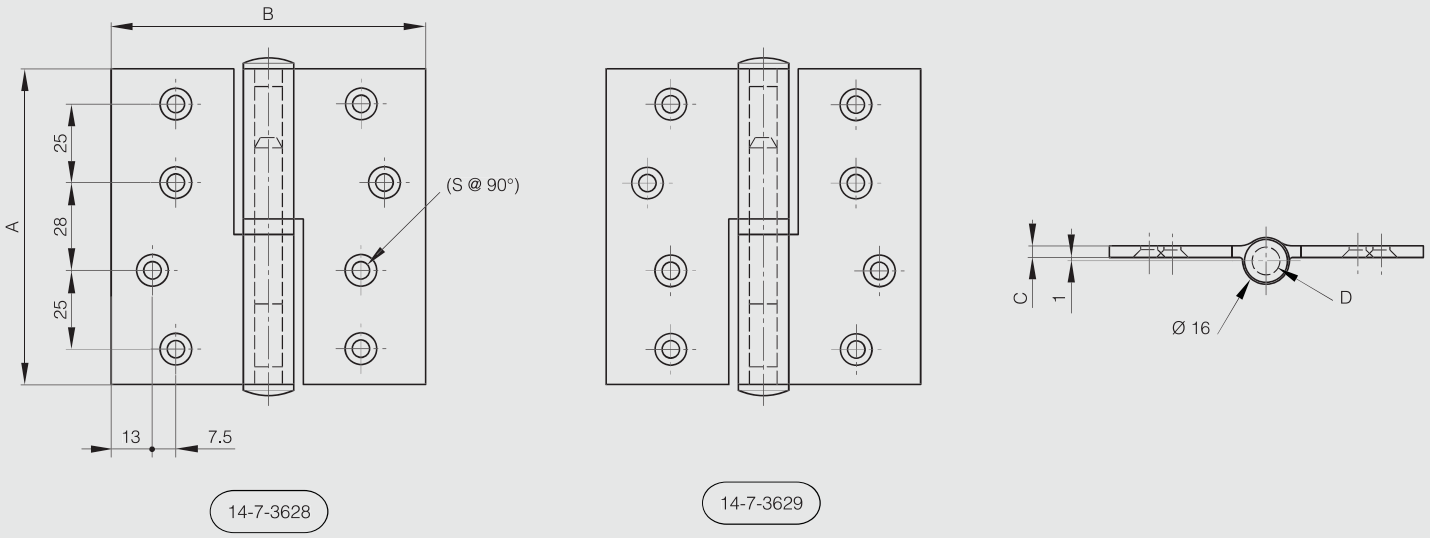

Brass hinge - 4 holes

270° BRASS RoHS

304 stainless steel pin.

Part number	Material	Finish	A	B	C	D	E	F	G	S	Note	Weight (g)
72-7-3659	brass	raw	30	20	2	3	2.5	12.5	17	2.7	drilled	12

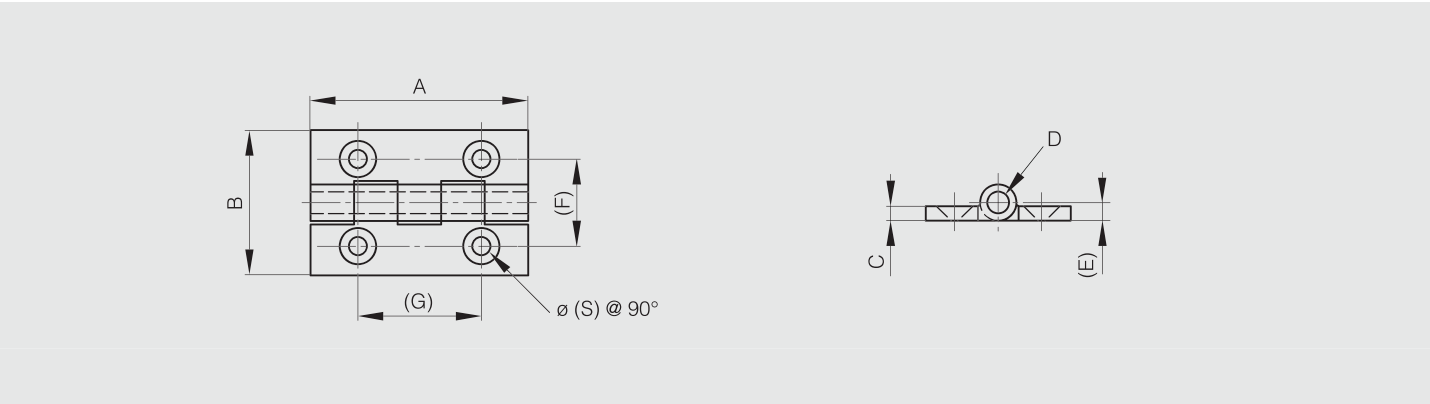

Brass hinges - 6 holes A

304 stainless steel pin.

Part number	Material	Finish	A	B	C	D	E	F	G	S	Weight (g)
72-7-3663	brass	raw	40	35	2	3	2.5	21	14	3	25
72-7-3664	brass	raw	40	40	2	3	2.5	23	14	3	29
72-7-3665	brass	raw	50	30	2	3	2.5	17.5	17.5	3	27

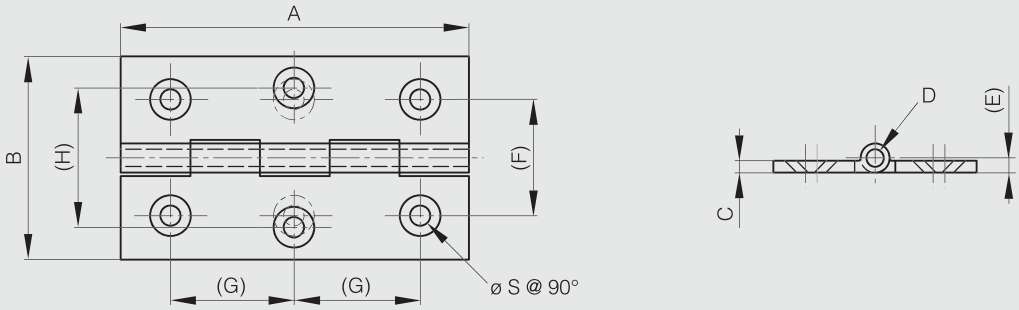

Brass hinges - 6 holes B

304 stainless steel pin.

Part number	Material	Finish	A	B	C	D	E	F	G	H	S	Weight (g)
72-7-3668	brass	raw	70	40	2	3	2.25	23	24	27	3.5	52
72-7-3671	brass	raw	80	60	3	4	3.5	28	28.5	45	4	130

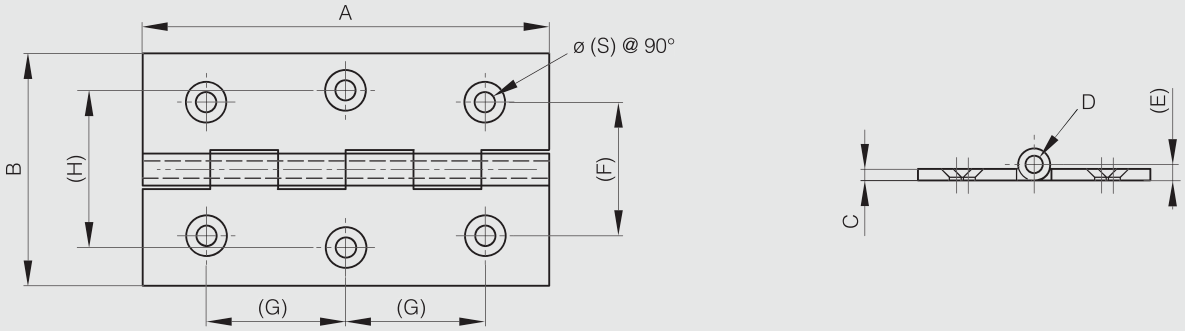

Lift-off hinges 30 mm long

Part number	Material	Finish	A	B	C	D	F	G	S	Note	Weight (g)
14-7-3390	steel	nickel plated	30	40	1.2	4	7.7	15	3	type 1	16
14-7-3391	steel	nickel plated	30	40	1.2	4	7.7	15	3	type 2	16

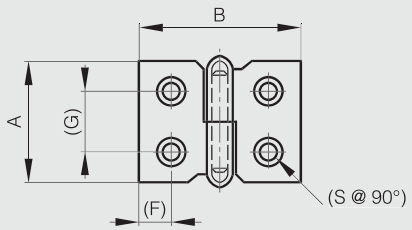

14-7-3390

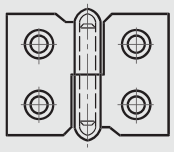

14-7-3391

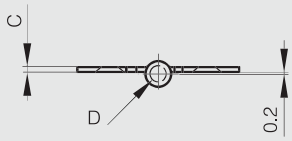

Lift-off hinges 40 mm long

Part number	Material	Finish	A	B	C	D	E	F	G	S	Note	Weight (g)
14-7-3392	steel	nickel plated	40	50	1.5	4	7.5	13	24	3	type 1	28
14-7-3393	steel	nickel plated	40	50	1.5	4	7.5	13	24	3	type 2	28

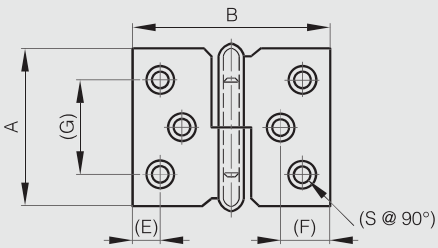

14-7-3392

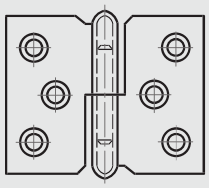

14-7-3393

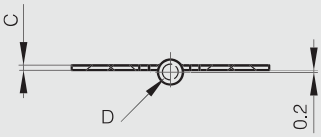

Lift-off hinges 50 x 30 mm

270° STEEL RoHS

Part number	Material	Finish	A	B	C	D	F	G	S	Note	Weight (g)
14-7-3394	steel	nickel plated	50	30	1.3	4	6	34	3.6	type 1 / drilled	20
14-7-3395	steel	nickel plated	50	30	1.3	4	6	34	3.6	type 2 / drilled	20

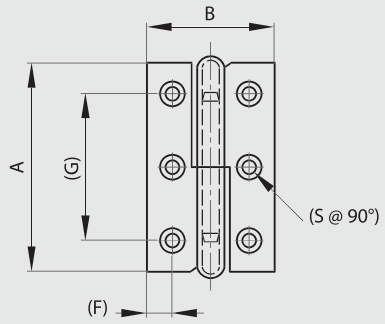

14-7-3394

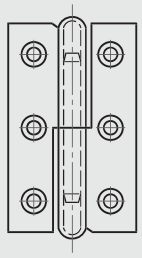

14-7-3395

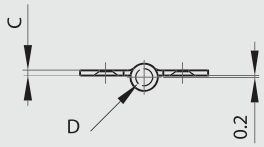

Lift-off hinges 60 to 80 mm long

270° STEEL RoHS

Part number	Material	Finish	A	B	C	D	E	F	G	S	Note	Weight (g)
14-7-3396	steel	nickel plated	60	40	1.5	4	5.5	7	46	4	type 1	35
14-7-3397	steel	nickel plated	60	40	1.5	4	5.5	7	46	4	type 2	35
14-7-3398	steel	nickel plated	68	45	1.5	4.5	6	8	54	4.5	type 1	46
14-7-3399	steel	nickel plated	68	45	1.5	4.5	6	8	54	4.5	type 2	46
14-7-3400	steel	nickel plated	80	50	1.5	5	7.2	9.2	62	4	type 1	59
14-7-3401	steel	nickel plated	80	50	1.5	5	7.2	9.2	62	4	type 2	59

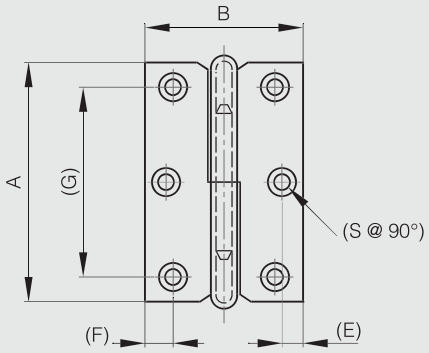

14-7-3396 & 14-7-3398 & 14-7-3400

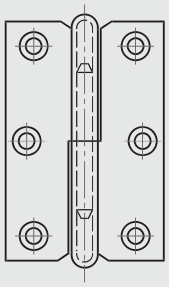

14-7-3397 & 14-7-3399 & 14-7-3401

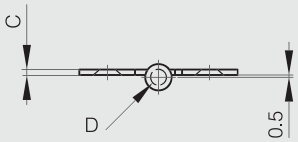

Lift-off hinges 80 x 60 mm - stainless steel

Pin and washer in stainless steel.

Part number	Material	Finish	A	B	C	D	S	Note	Weight (g)
14-1-3872	304 stainless steel	raw	80	60	2	6	6.3	type 1	115
14-1-3873	304 stainless steel	raw	80	60	2	6	6.3	type 2	115

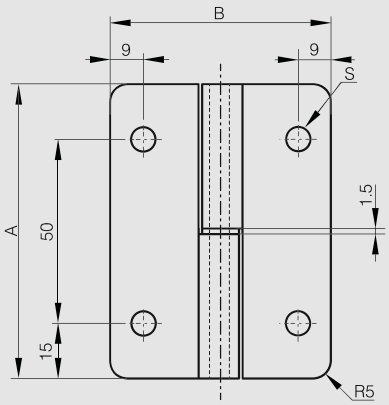

14-1-3872

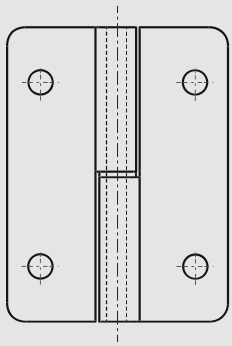

14-1-3873

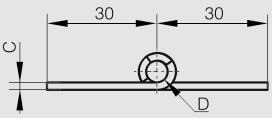

Lift-off hinges 80 x 80 mm - stainless steel with 6 holes

Only the visible side has a brushed finish.
Produced mainly in stainless steel, for a complete description of the materials contact us.

Part number	Material	Finish	A	B	C	D	S	Note	Weight (g)
14-7-3727	304 stainless steel	brushed	80	80	2.5	7	5.8	type 1 / square corners	175
14-7-3728	304 stainless steel	brushed	80	80	2.5	7	5.8	type 2 / square corners	175

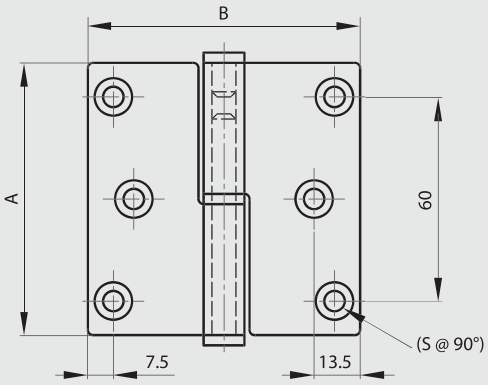

14-7-3727

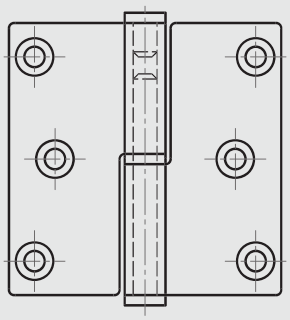

14-7-3728

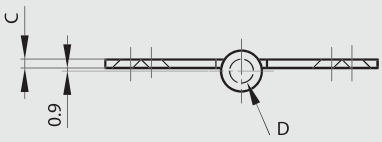

Lift-off hinges 100 x 82 mm - stainless steel with 8 holes

Only the visible side has a brushed finish.
Produced mainly in stainless steel, for a complete description of the materials contact us.

Part number	Material	Finish	A	B	C	D	S	Note	Weight (g)
14-7-3675	304 stainless steel	brushed	100	82	2.5	7	6	type 1 / square corners	220
14-7-3679	304 stainless steel	brushed	100	82	2.5	7	6	type 2 / square corners	220

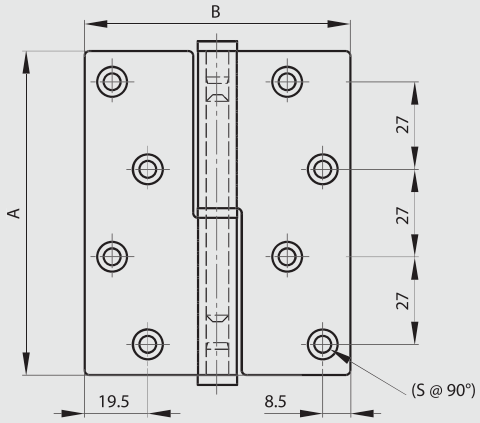

14-7-3675

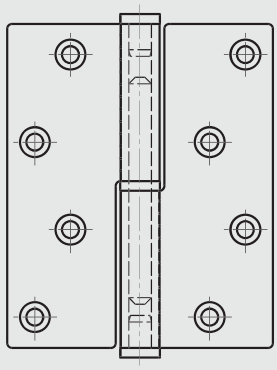

14-7-3679

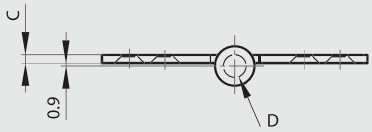

Hinge for marine applications - 36.5 x 38 mm

Riveted pin.

Part number	Material	Finish	A	B	C	D	S	Weight (g)
52-1-3945	316 stainless steel	polished	36.5	38	2	5	6	32

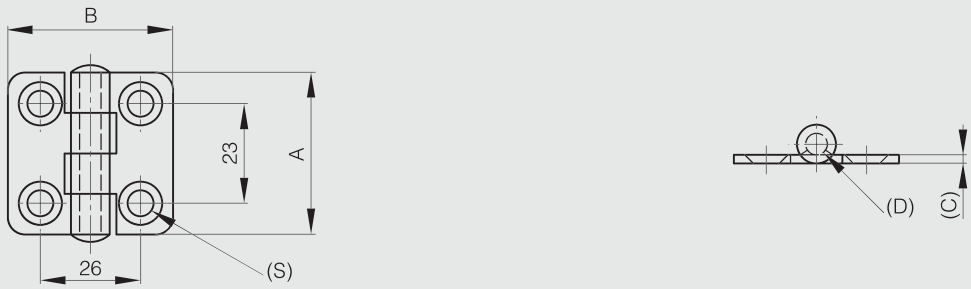

Hinge for marine applications - 36.5 x 56.5 mm

Riveted pin.

Part number	Material	Finish	A	B	C	D	S	Weight (g)
52-1-3947	316 stainless steel	polished	36.5	56.5	2	5	6	40

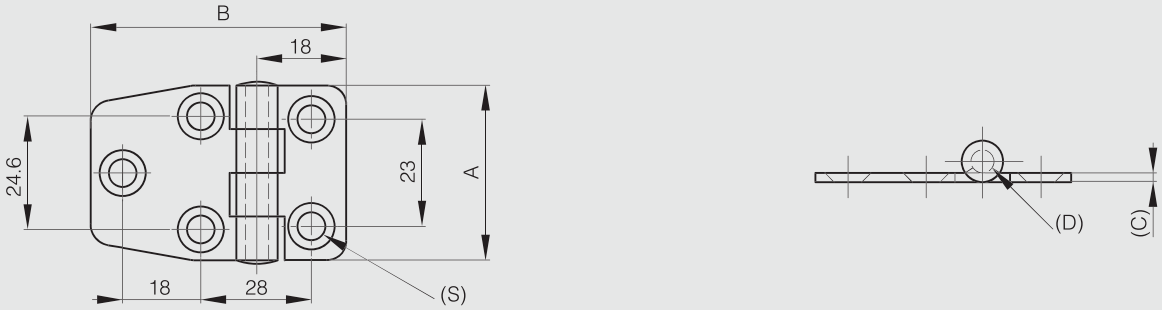

Hinge for marine applications - 36.5 x 76 mm

Riveted pin.

Part number	Material	Finish	A	B	C	D	S	Weight (g)
52-1-3944	316 stainless steel	polished	36.5	76	2	4	6	50

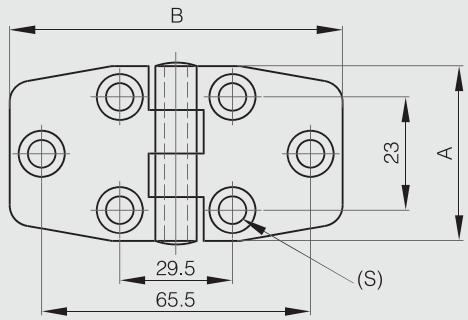

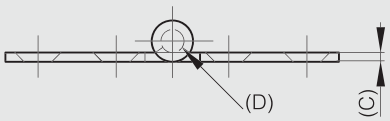

Hinges for marine applications - 36.5 x 65.5 mm

Riveted pin.

Part number	Material	Finish	A	B	C	D	E	S	Weight (g)
52-1-3950	316 stainless steel	polished	36.5	65.5	2	5	10	6	54
52-1-3949	316 stainless steel	polished	36.5	65.5	2	5	15.9	6	54
52-1-3948	316 stainless steel	polished	36.5	65.5	2	5	19.2	6	54

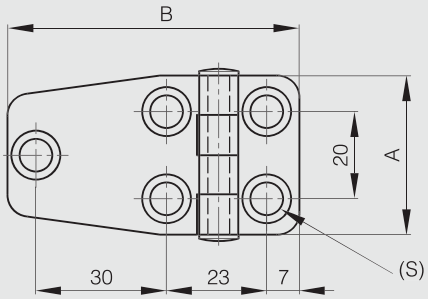

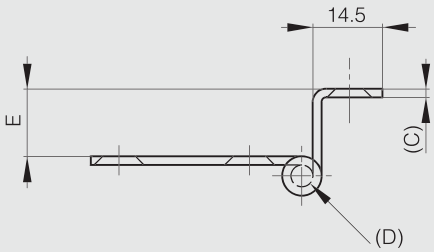

Hinge for marine applications - 38.1 x 71.1 mm

Part number	Material	Finish	A	B	C	D	S	Weight (g)
52-1-3898	316 stainless steel	polished	38.1	71.1	2	3	6	42

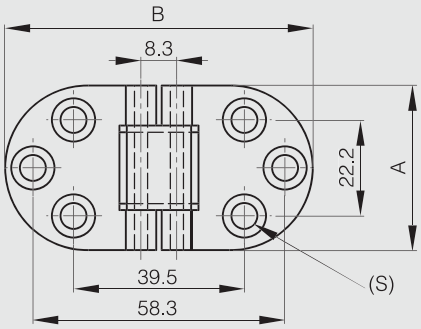

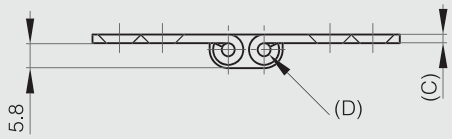

Hinge for marine applications - 52 x 70 mm

Riveted pin.

Part number	Material	Finish	A	B	C	D	S	Weight (g)
52-1-3964	316 stainless steel	brushed	52	70	1.2	4	5.2	45

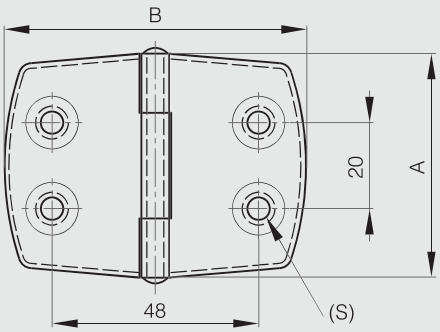

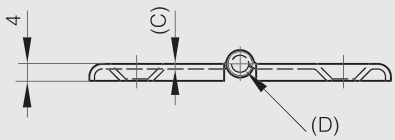

Hinge for marine applications - 30 x 101 mm

Riveted pin.

Part number	Material	Finish	A	B	C	D	S	Weight (g)
52-1-3954	316 stainless steel	polished	30	101	2	5	6	48

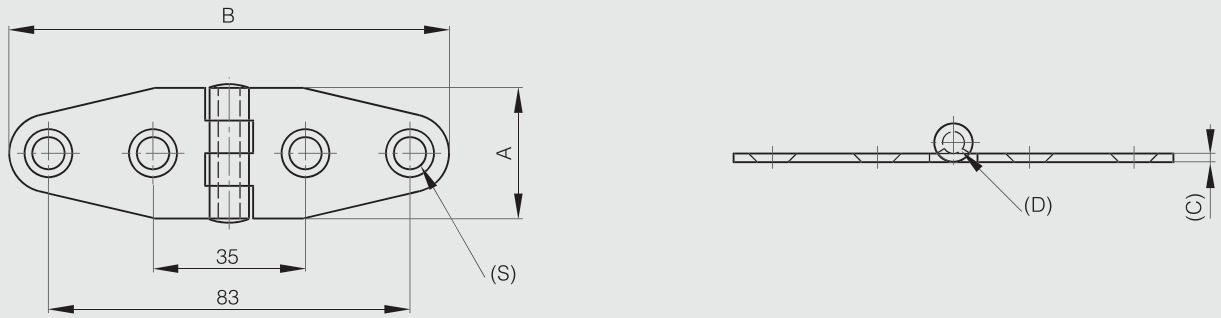

Hinge for marine applications - 38 x 178 mm

Riveted pin.

Part number	Material	Finish	A	B	C	D	S	Weight (g)
52-1-3957	316 stainless steel	polished	38	178	2	5	6	96

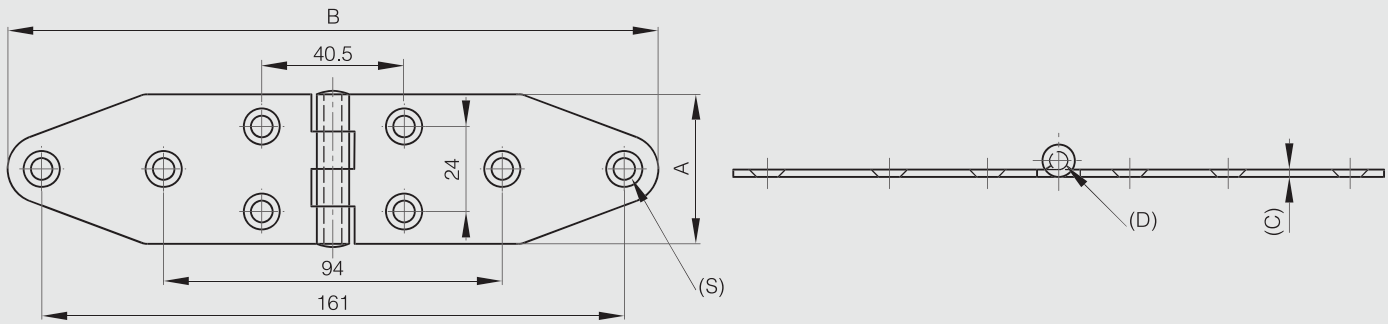

Hinge for marine applications - 40.1 x 137.3 mm

Riveted pin.

Part number	Material	Finish	A	B	C	D	S	Weight (g)
52-1-3953	316 stainless steel	polished	40.1	137.3	2	5	6	80

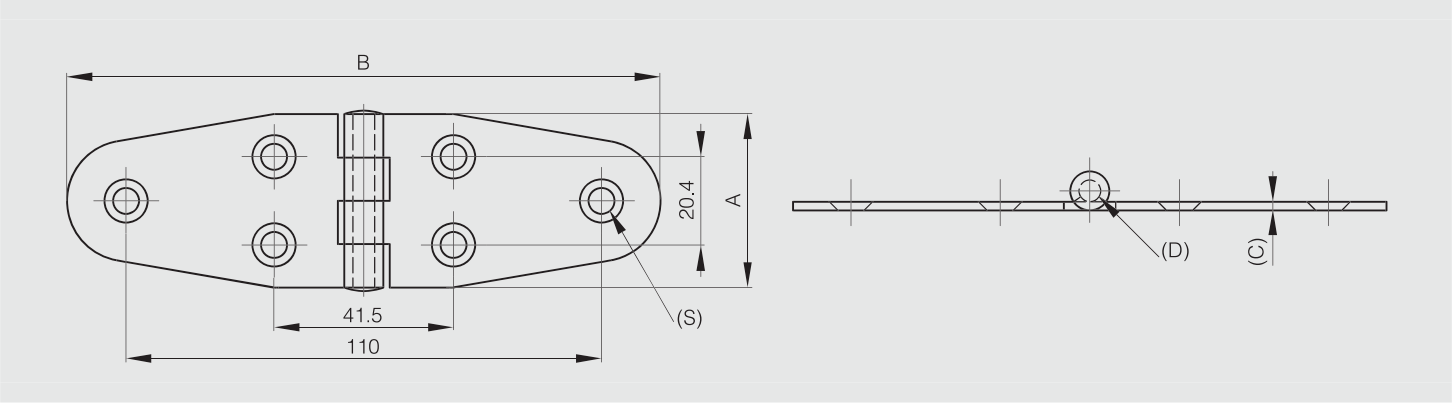

Brass hinge - 30 x 98.5 mm

304 stainless steel pin.
Same shape available for hasp 72-7-3726.

Part number	Material	Finish	A	B	C	D	S	Weight (g)
72-7-3725	brass	chrome plated	30	98.5	3	4	4	57

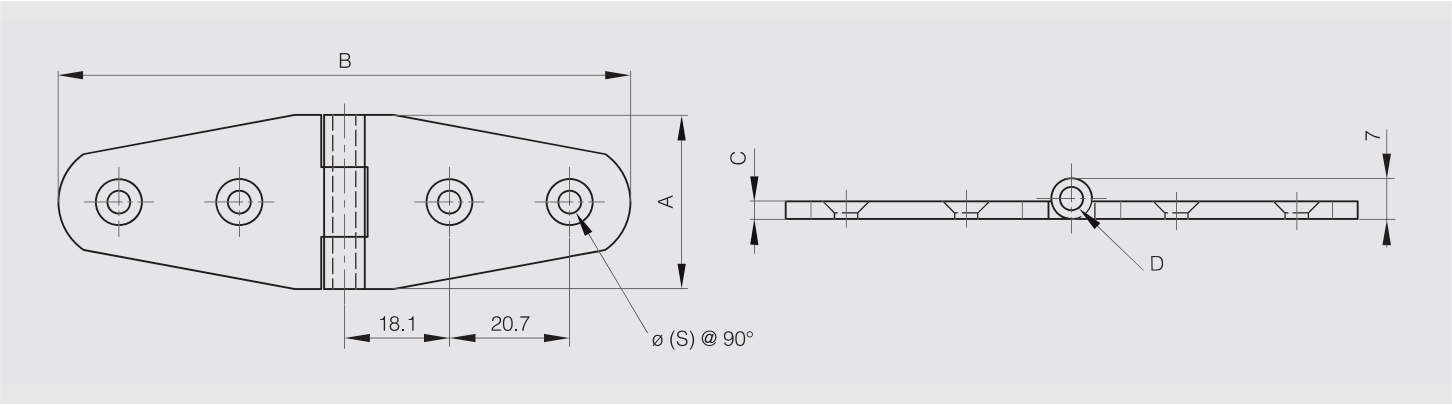

Brass hinge - 30 x 76 mm

304 stainless steel pin.

Part number	Material	Finish	A	B	C	D	S	Weight (g)
72-7-3723	brass	chrome plated	30	76	3	4	4	55

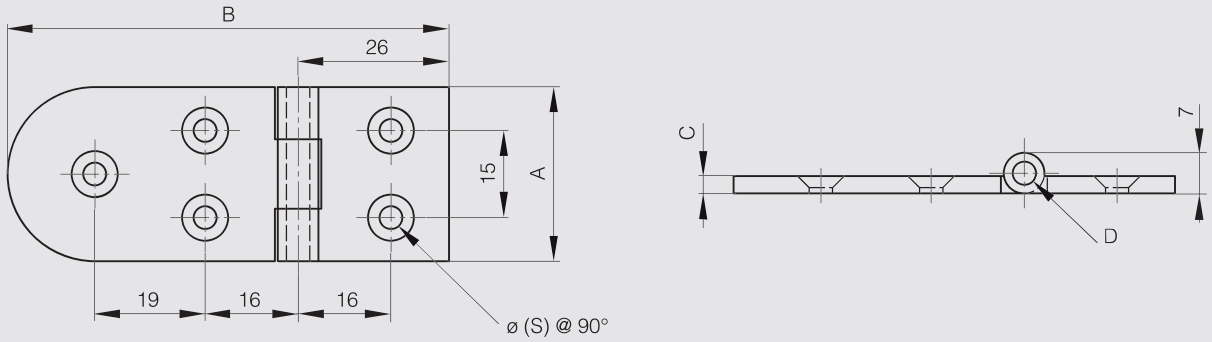

Small butt hinge with one cranked leaf 38 mm

304 stainless steel headed pin.

270° BRASS RoHS

Part number	Material	Finish	A	B	C	D	E	S	Weight (g)
63-1-3301	brass	chrome plated	38	16.5	1.5	3	16.5	4	30

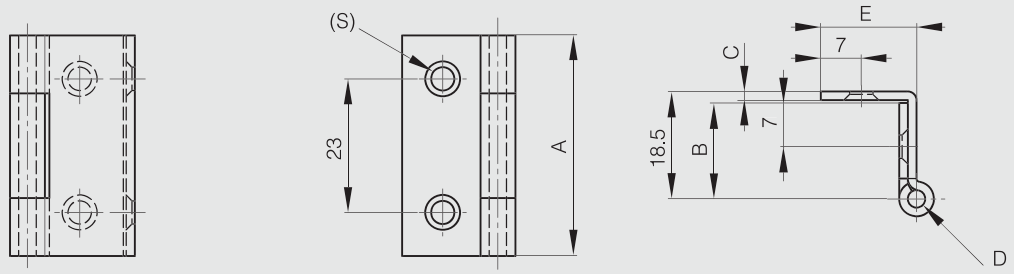

Small butt hinges with one cranked leaf and removable pin 38 mm

Removable pin.

270° STEEL RoHS

Part number	Material	Finish	A	B	C	D	E	F	G	H	J	K	S	Pin material	Weight (g)
60-1-3331	steel	chrome plated	38	19	1.5	3	17	8	23	26	7	3.5	4	nickel plated steel	31
60-1-3332	steel	chrome plated	38	19	1.5	3	19	10	24.5	18	7.5	4	4.7	nickel plated steel	31
60-1-3342	steel	black cataphoresis	38	19	1.5	3	21	10	22.5	18	7.5	4	4.7	raw steel	31

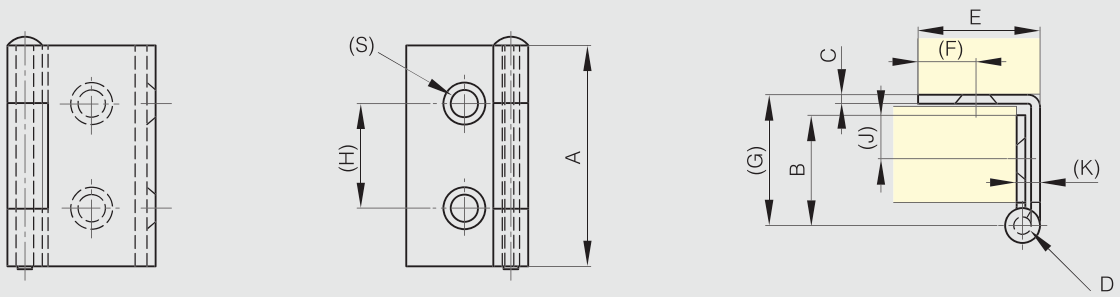

Small butt hinge with one cranked leaf 50 mm

180° STAINLESS STEEL RoHS

304 stainless steel pin.
For door thickness max. 11 mm.

Part number	Material	Finish	A	B	C	D	E	S	Weight (g)
62-1-3300	430 stainless steel	polished	50	28.5	1	3	12	4	20

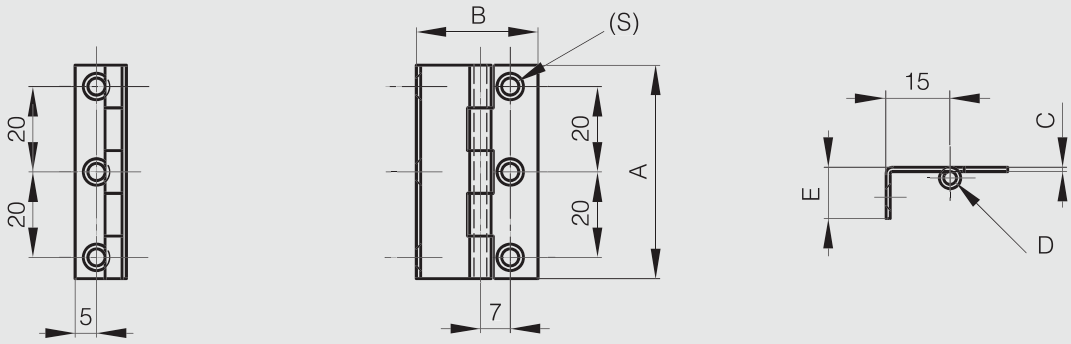

Small butt hinge with one cranked leaf and removable pin 50 mm

270° STAINLESS STEEL RoHS

Removable pin.
Door thickness: max. 20 mm.

Part number	Material	Finish	A	B	C	D	E	S	Weight (g)
62-1-3301	430 stainless steel	polished	50	44.8	1.2	3	19	4.8	33

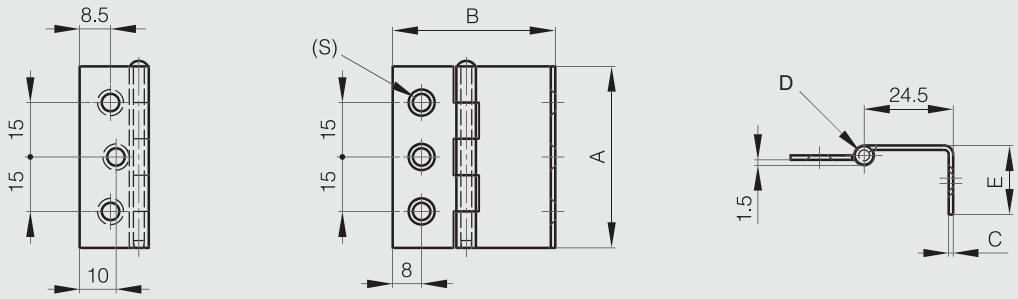

Small butt hinge with two cranked leaves and removable pin 38 x 18.5 mm

304 stainless steel removable pin.

Part number	Material	Finish	A	B	C	D	E	S	Weight (g)
63-1-3300	brass	chrome plated	38	15	1.5	3	14	4	36

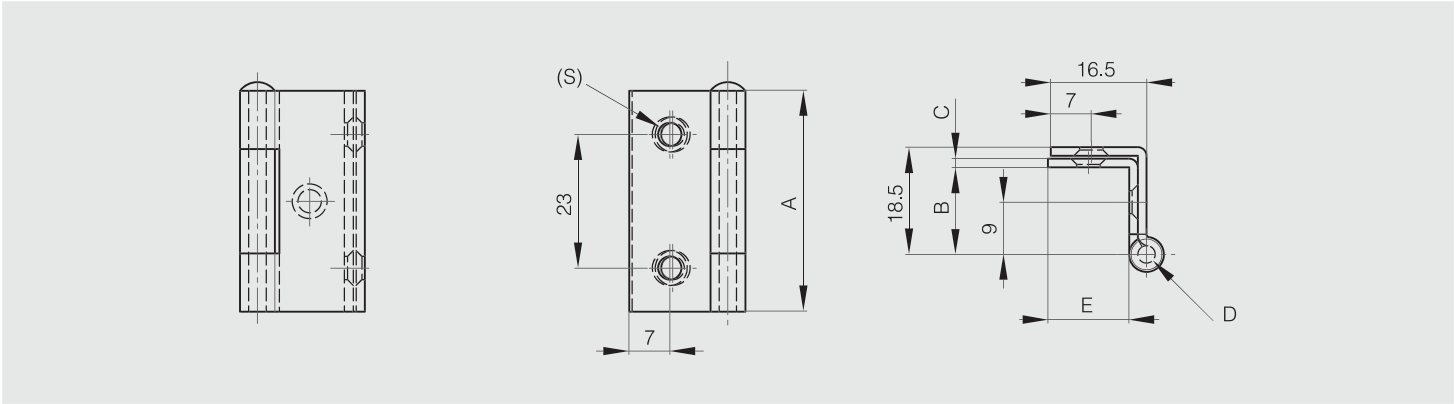

Small butt hinge with two cranked leaves and removable pin 38 x 44.8 mm

Removable pin in nickel plated steel.

Part number	Material	Finish	A	B	C	D	E	S	Weight (g)
60-1-3523	steel	chrome plated	38	22.6	1.5	3	19	5.4	52

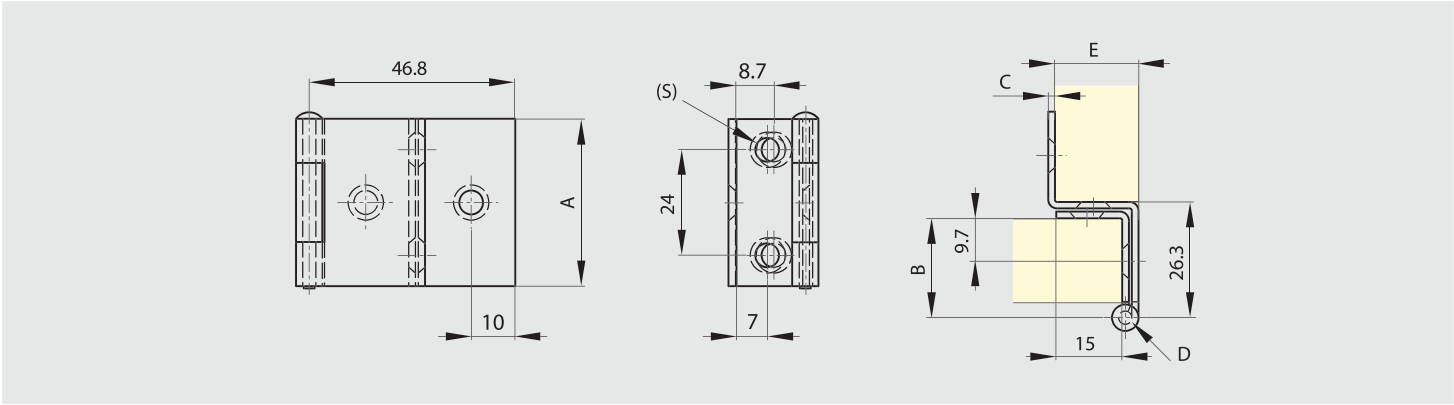

Small butt hinges with two cranked leaves and removable pin 55 x 38 mm

Removable pin.

Part number	Material	Finish	A	B	C	D	E	F	S	Pin material	Weight (g)
60-1-3323	steel	chrome plated	55	14.5	1.5	3	13.5	25	4	nickel plated steel	56
60-1-3325	steel	brass	55	14.5	1.5	3	13.5	25	4	brass plated steel	56

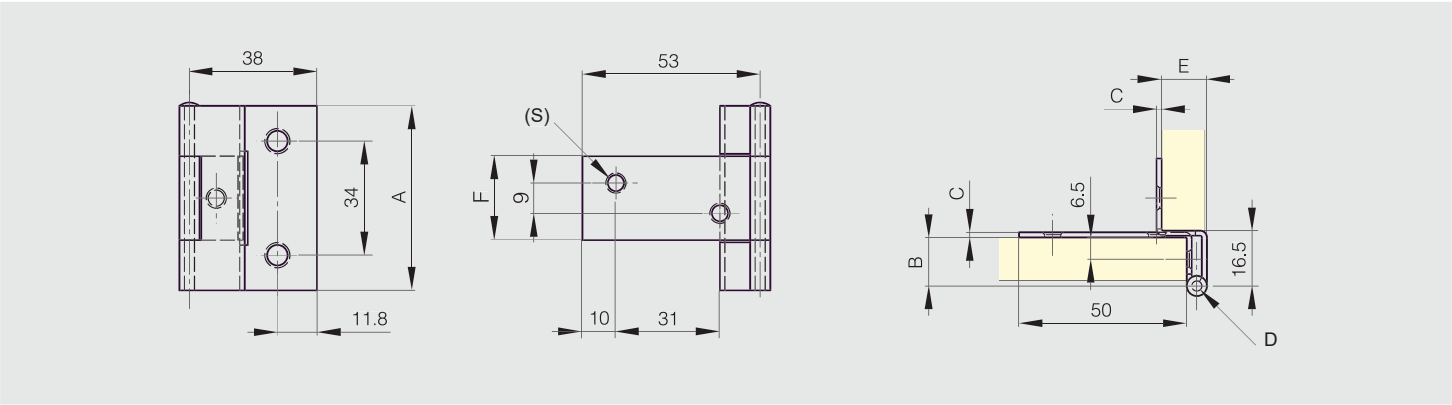

Small butt hinge with two cranked leaves 55 x 53.7 mm

Removable pin.

Part number	Material	Finish	A	B	C	D	E	F	S	Pin material	Note	Weight (g)
60-1-3303	steel	chrome plated	55	14.5	1.5	3	13.5	25	4.75	nickel plated steel	removable pin	65

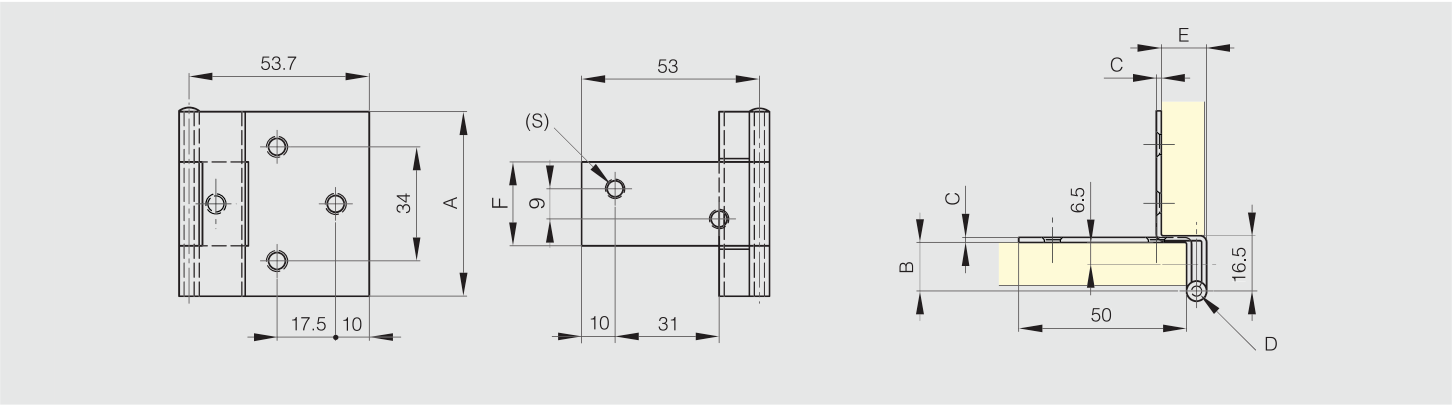

Small butt hinges with one cranked leaf 38 mm

180° STAINLESS STEEL STEEL RoHS

Part number	Material	Finish	A	B	C	D	E	F	G	S	Pin material	Weight (g)
60-1-3525	steel	chrome plated	38	7	1.5	3	18	27	21	4.5	304 stainless steel	24
60-1-3327	steel	chrome plated	38	11	1.5	3	14	27	17	4.5	304 stainless steel	24
60-1-3329	steel	nickel plated	38	11	1.5	3	14	27	17	4.5	304 stainless steel	25
62-1-3628	316L stainless steel	raw	38	15	1.5	3	14	31	17	4.5	316L stainless steel	26

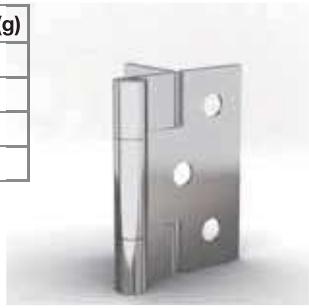

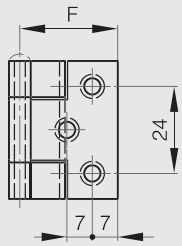

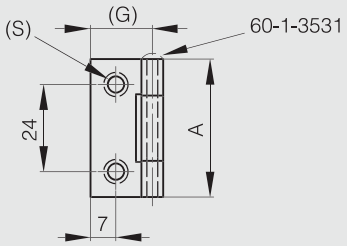

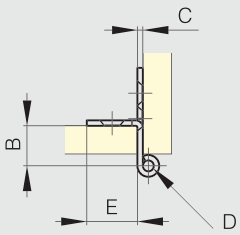

Small butt hinge with two cranked leaves 60 mm

180° STEEL RoHS

Part number	Material	Finish	A	B	C	D	E	S	Weight (g)
60-1-3620	steel	zinc plated	60	56	1.5	3	10	5	59

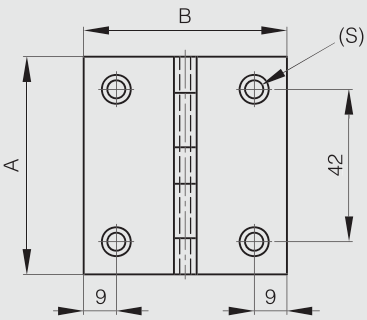

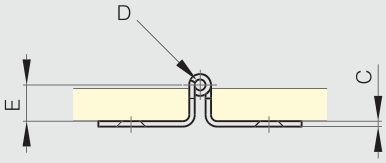

Small butt hinge with one cranked leaf 60 mm

180° STAINLESS STEEL RoHS

The same hinge is available with a spring (part number 71-1-3622).

Part number	Material	Finish	A	B	C	D	S1	S2	Weight (g)
62-1-3625	316L stainless steel	brightened	60	30	1.5	3	4.2	5	40

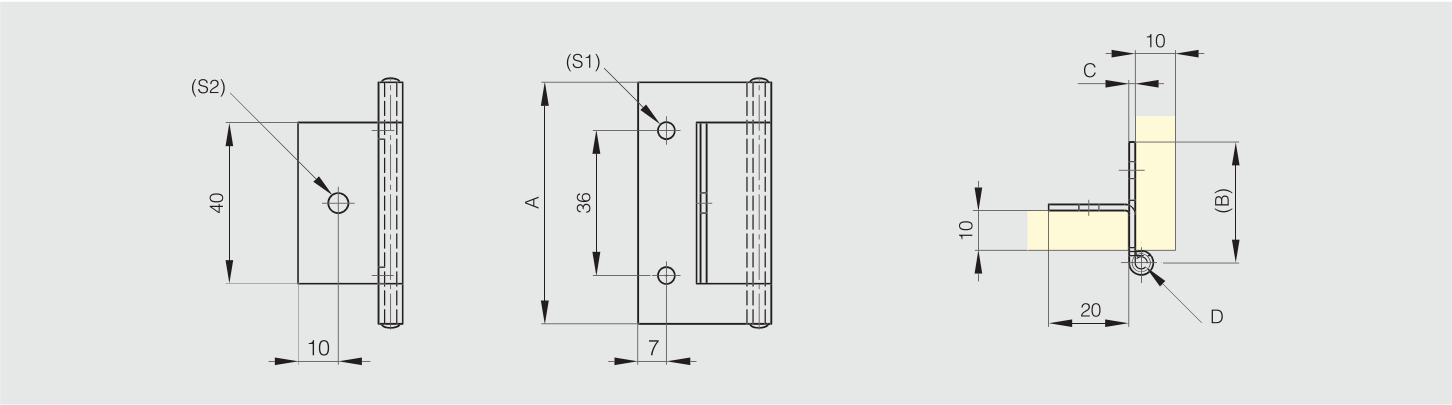

Small butt hinge with one cranked leaf 66 mm

180° STAINLESS STEEL RoHS

The same hinge is available with a spring (part number 71-1-3649).
Pin in 316 stainless steel.

Part number	Material	Finish	A	B	C	D	S	Weight (g)
62-1-3637	316 stainless steel	brightened	66	22.5	1.5	4	4	42

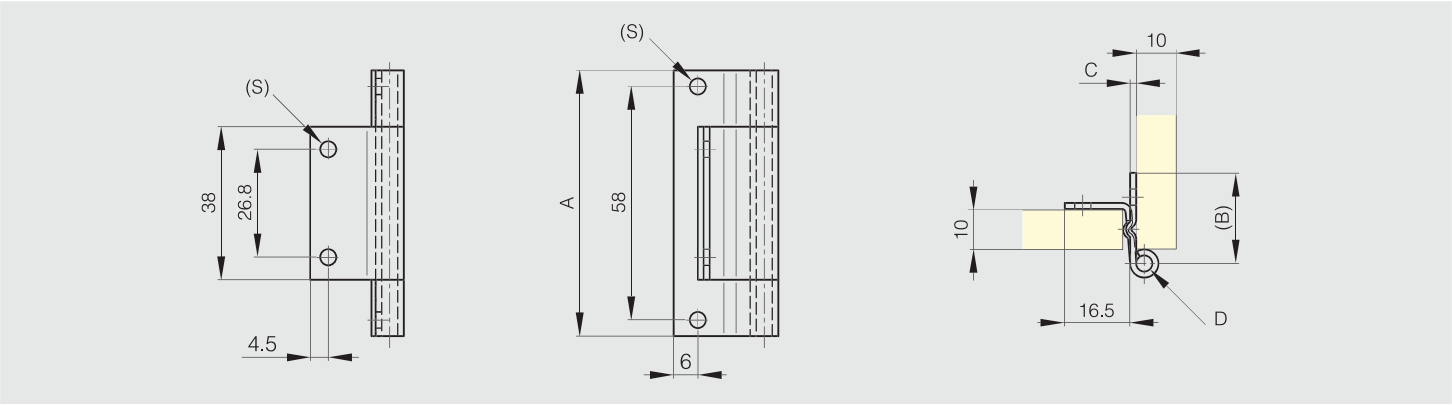

Pin hinge with one cranked leaf

Produced mainly in stainless steel, for a complete description of the materials contact us.

Part number	Material	Finish	A	B	C	D	E	S	Note	Weight (g)
12-1-3682	304 stainless steel	raw	60	72	2	5	30	4	type 2	70
12-1-3683	304 stainless steel	raw	60	72	2	5	30	4	type 1	70

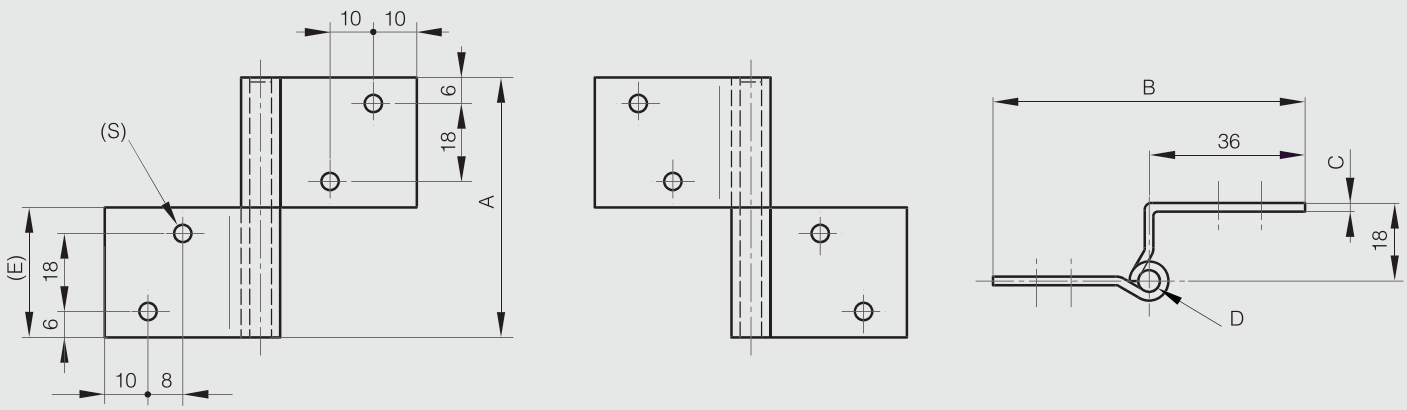

12-1-3683

12-1-3682

Stainless steel hinge with removable pin

Removable pin.

Part number	Material	Finish	A	B	C	D	Weight (g)
52-1-3877	304 stainless steel	brightened	60	94.5	1.5	4	50

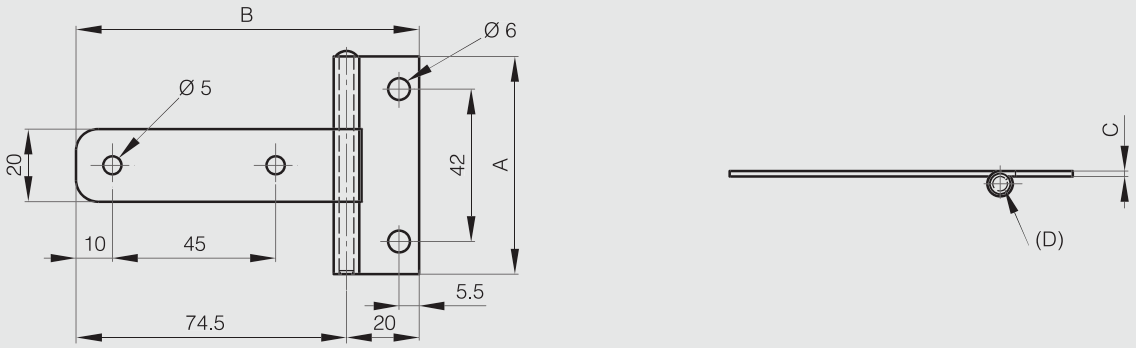

Removable pin hinges with nylon washers

Nylon washers.
Produced mainly in stainless steel, for a complete description of the materials contact us.

Part number	Material	Finish	A	B	C	D	E	S	Note	Weight (g)
52-1-3605	304 stainless steel	raw	112	136.5	2.5	5	63.5		undrilled	248
52-1-3606	304 stainless steel	raw	112	136.5	2.5	5	63.5	7	drilled	248

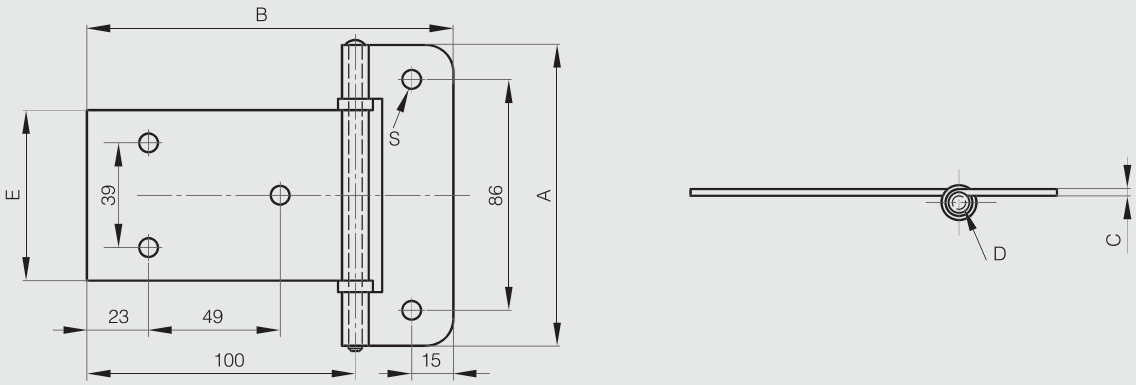

Hinges 62 x 74 mm

Part number	Material	Finish	A	B	C	D	Weight (g)
50-1-3308	steel	raw	62	74	2	4.9	60
52-1-3769	304 stainless steel	raw	62	74	2	4.9	60

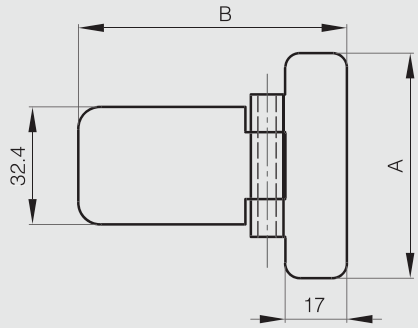

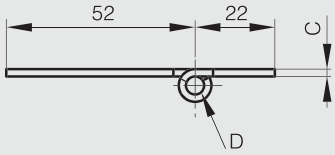

Hinge 20 x 65 mm

Part number	Material	Finish	A	B	C	D	S	Weight (g)
52-1-4013	304 stainless steel	raw	20	65	1	2	4	11

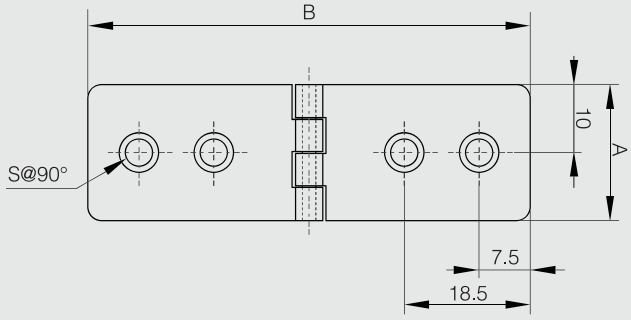

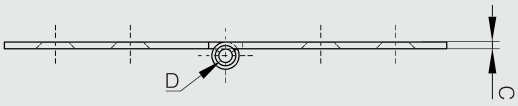

Hinges 20 x 77mm and 22 x 120 mm

270° STEEL RoHS

Part number	Material	Finish	A	B	C	D	E	F	S	Weight (g)
50-7-3736	steel	raw	20	77	1.2	3	10	16	3.2	22
50-7-3737	steel	raw	22	120	1.5	5	13.5	30	4.6	36

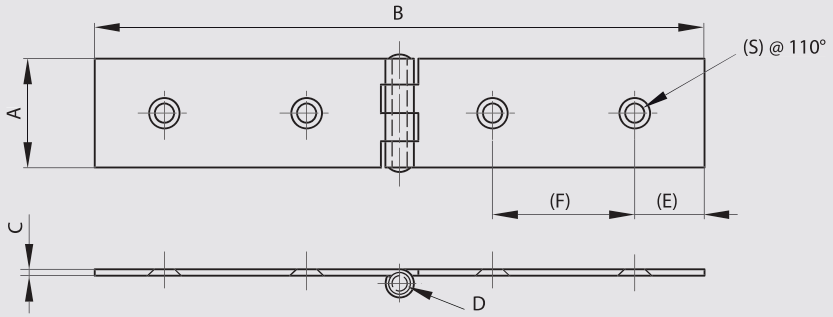

Hinge 25 x 140 mm

270° STEEL

Part number	Material	Finish	A	B	C	D	E	F	S	Note	Weight (g)
50-7-3880	steel	raw	25	140	1.5	3.5	11	46	3.5	riveted pin	45

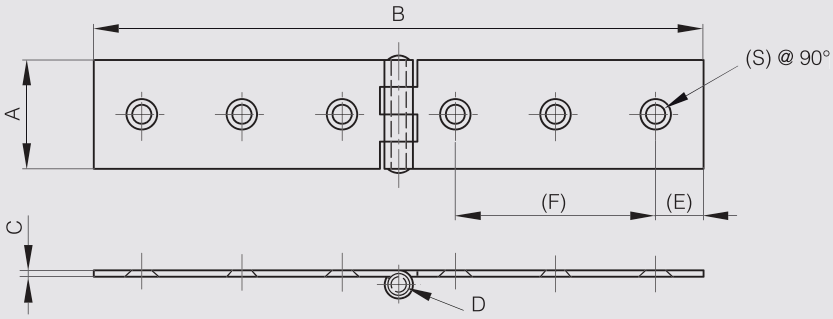

Hinges 30 x 140 mm

Available drilled or undrilled depending on part numbers.

Part number	Material	Finish	A	B	C	D	E	F	S	Note	Weight (g)
50-7-3343	steel	raw	30	140	2.5	6				undrilled	97
50-7-3339	steel	zinc plated	30	140	2.5	6	12.5	35	5.2	drilled	95

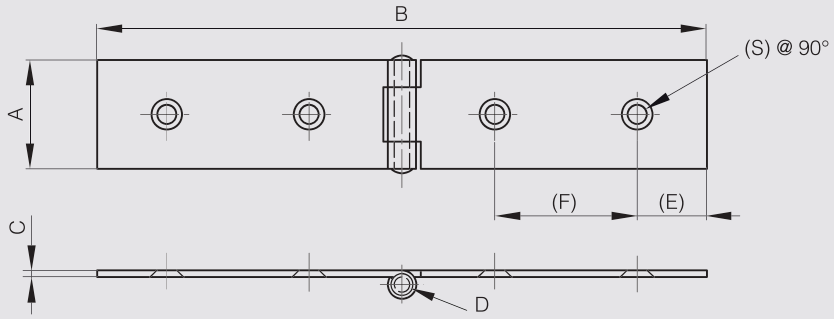

Hinge 30 x 83 mm

Part number	Material	Finish	A	B	C	D	S	Weight (g)
50-1-3313	steel	nickel plated	30	83	1.5	3.4	5.5	31

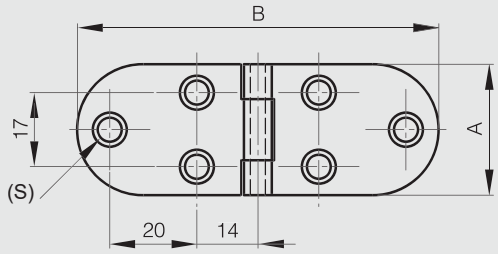

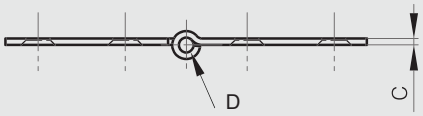

Zinc die-cast hinges 30 mm long

Nickel plated steel pin.

180° ZAMAK RoHS

Part number	Material	Finish	A	B	C	D	E	Weight (g)
72-1-9006	zinc die-cast	black	30	27.5	13	5	14.5	60
72-1-9007	zinc die-cast	black	30	22	13	5	9	42

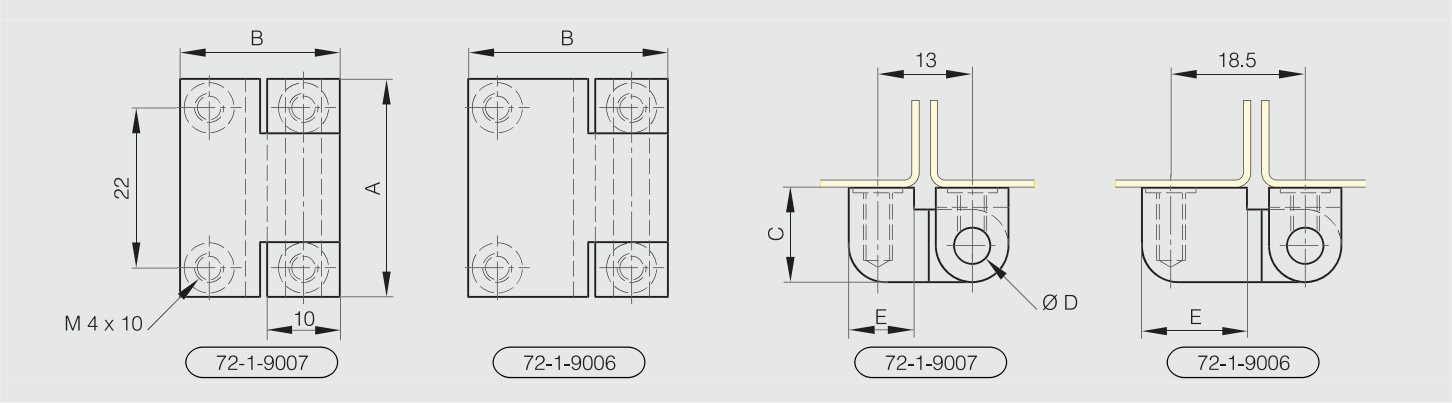

Zinc die-cast hinge 60 mm long

Nickel plated steel pin.

180° ZAMAK RoHS

Part number	Material	Finish	A	B	C	D	E	Weight (g)
72-1-9005	zinc die-cast	black	60	35	18	7	18	180

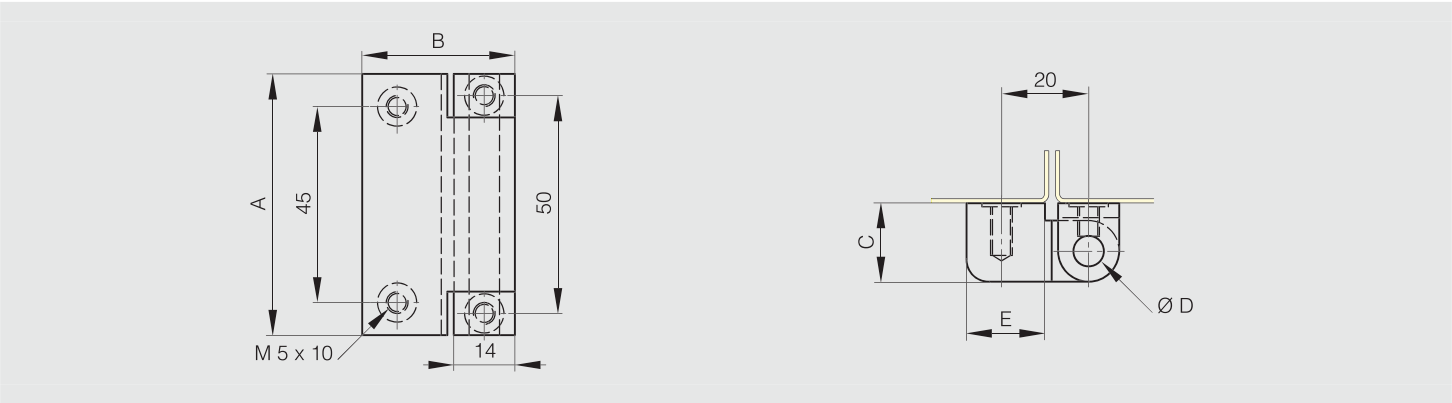

Zinc die-cast hinge 90 x 60 mm

Nickel plated steel pin.

Part number	Material	Finish	A	B	C	D	Weight (g)
72-1-9011	zinc die-cast	black	90	60	8	8	305

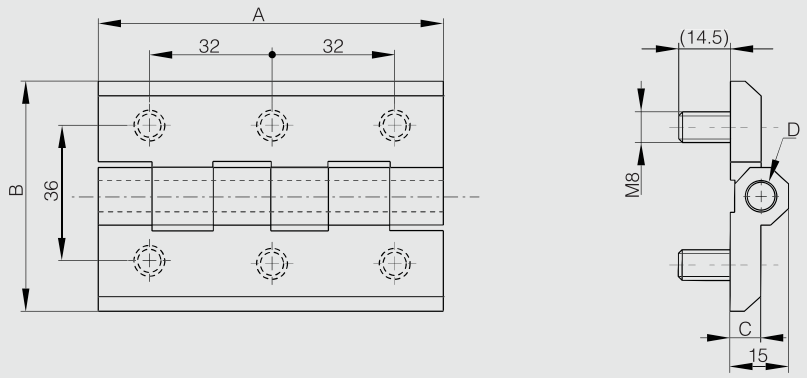

Zinc die-cast pin hinge for surface mounted door

Nylon washer.

Part number	Material	Finish	A	B	C	Weight (g)
72-1-9004	zinc die-cast	black	64	17.5	15	76

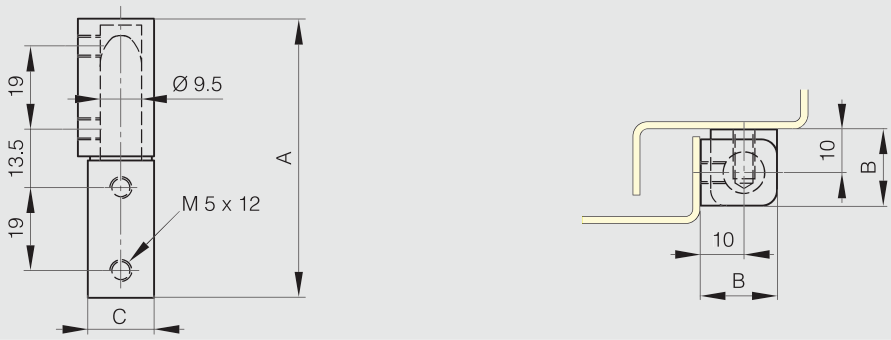

Zinc die-cast lift-off hinges 25.5 mm

Nylon washer.

Part number	Material	Finish	A	B	C	Note	Weight (g)
72-1-4206	zinc die-cast	black	25.5	20.5	10	type 2	30
72-1-4207	zinc die-cast	black	25.5	20.5	10	type 1	30

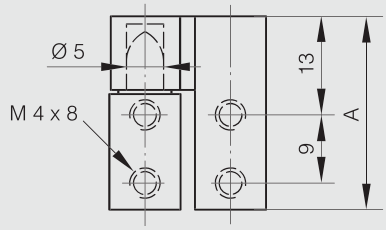

72-1-4207

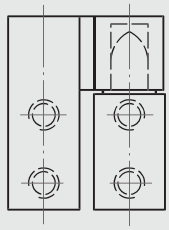

72-1-4206

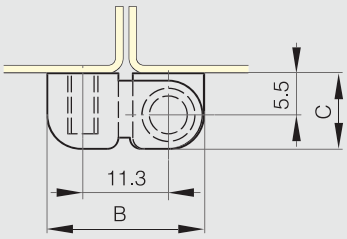

Zinc die-cast lift-off hinges 64 x 33 mm

Nylon washer.

Part number	Material	Finish	A	B	C	Note	Weight (g)
72-1-9000	zinc die-cast	black	64	33	17.5	type 2	150
72-1-9001	zinc die-cast	black	64	33	17.5	type 1	144

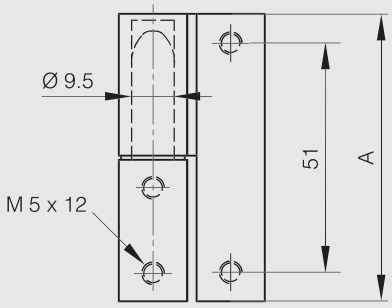

72-1-9001

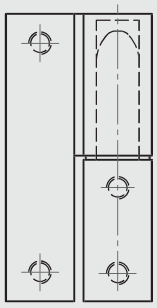

72-1-9000

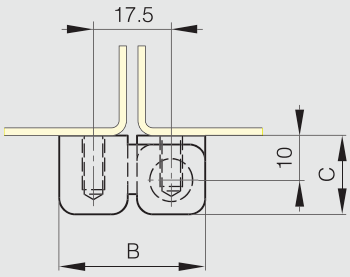

Zinc die-cast lift-off hinges 64 x 50 mm

Nylon washer.
Steel pin.

Part number	Material	Finish	A	B	C	Note	Weight (g)
72-1-9002	zinc die-cast	black	64	50	17.5	type 2	243
72-1-9003	zinc die-cast	black	64	50	17.5	type 1	247

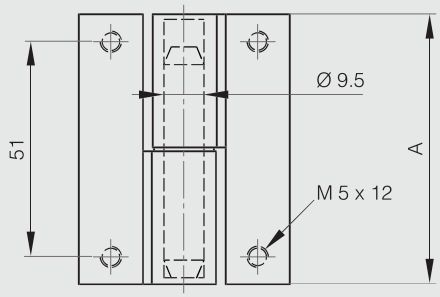

72-1-9003

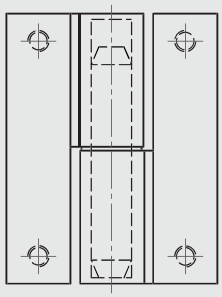

72-1-9002

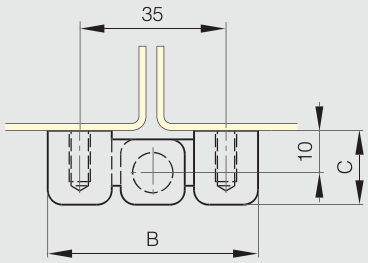

Zinc die-cast lift-off hinges 80 mm

Fixing by 2 threaded studs. Stainless steel pin.
Leaves blocked with grub screw. Unscrew it to get a ligt-off hinge.

Part number	Material	Finish	A	B	C	D	G	Note	Weight (g)
14-7-3813	zinc die-cast	black	80	65	8	8	60	type 2	330
14-7-3814	zinc die-cast	black	80	65	8	8	60	type 1	330

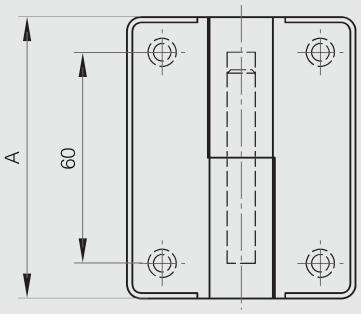

14-7-3814

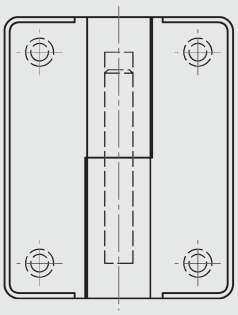

14-7-3813

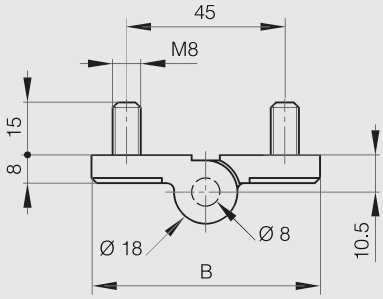

Bolt-on hinges in 2 parts

With solid brass pin and zinc plated brass washers.

Part number	Material	Finish	A	B	C	Weight (g)
72-1-3858	steel	zinc plated	33	10	16	87

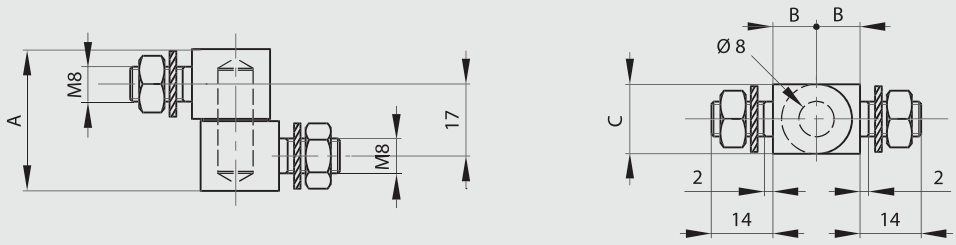

Bolt-on hinges in 3 parts - 49 mm long

With solid brass pin and zinc plated brass washers.

Part number	Material	Finish	A	B	C	D	E	Weight (g)
72-1-3733	steel	zinc plated	49	10	16	22	20	130
72-1-3857	steel	zinc plated	49	10	16	14	22.5	138

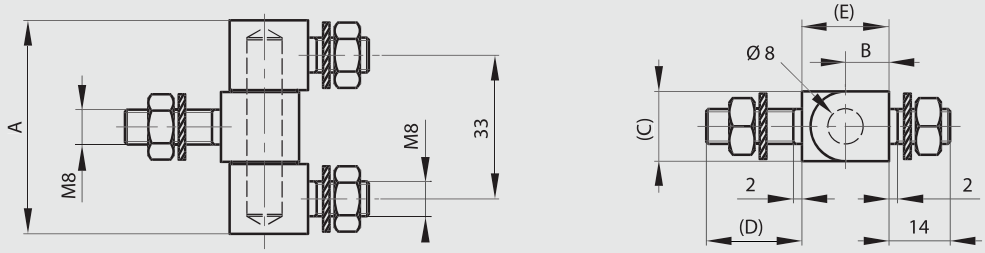

Bolt-on hinge in 3 parts - 36 mm long

With washers and M6 bolts.

Part number	Material	Finish	A	B	C	Weight (g)
72-1-3856	steel	raw	36	6.5	12	70

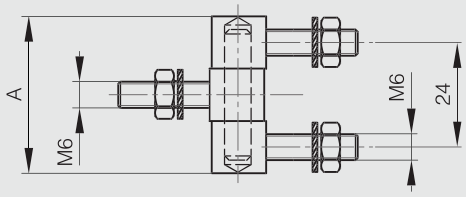

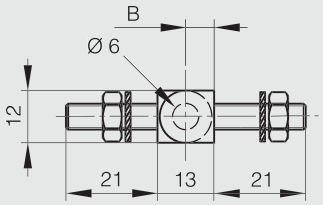

Bolt-on hinge in 3 parts with plate

No washers and no bolts.

Part number	Material	Finish	A	B	C	Weight (g)
72-1-3566	steel	raw	36	6.5	12	63

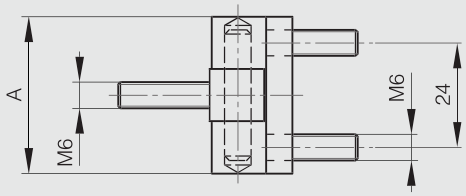

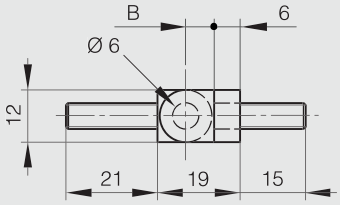

Brass hinge with removable pin - 3 knuckles

Removable pin in nickel plated steel.

Part number	Material	Finish	A	B	C	D	S	Weight (g)
72-7-3330	brass	chrome plated	45	7.5	10	3.9	2.5	43

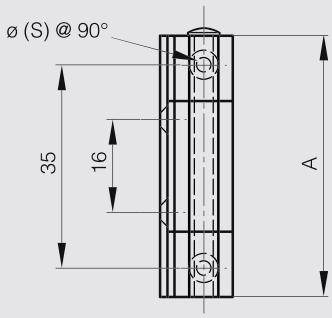

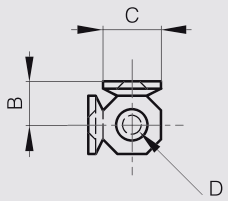

Brass hinges with removable pin - 4 knuckles

Removable pin.

Part number	Material	Finish	A	B	C	D	E	F	S	Pin material	Weight (g)
72-7-3329	brass	chrome plated	40	7.5	10	3.9	5	20	3	nickel plated steel	39
72-7-3331	brass	chrome plated	50	7.5	10	3.9	5	26.5	3	nickel plated steel	50
72-7-3332	brass	chrome plated	80	12	16	7	9.6	40	4.5	chrome plated brass	190

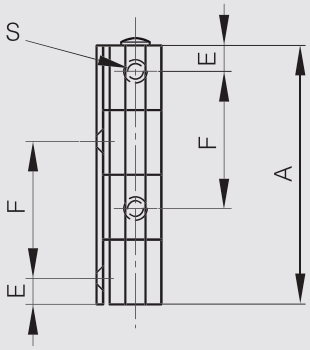

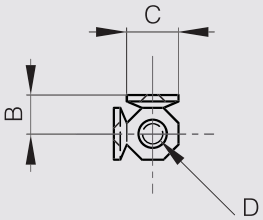

Lift-off hinges in aluminium profile with a stainless steel pin

270° ALU RoHS

Stainless steel pin.
Supplied with polymer caps.

Part number	Material	Finish	A	B	C	D	E	Note	Weight (g)
12-1-4283	6060 T5 alu	clear anodised	102	45.9	2.5	6.1	50	type 1	50
12-1-4286	6060 T5 alu	clear anodised	102	45.9	2.5	6.1	50	type 2	50
12-1-4284	6060 T5 alu	black anodised	102	45.9	2.5	6.1	50	type 1	50
12-1-4287	6060 T5 alu	black anodised	102	45.9	2.5	6.1	50	type 2	50

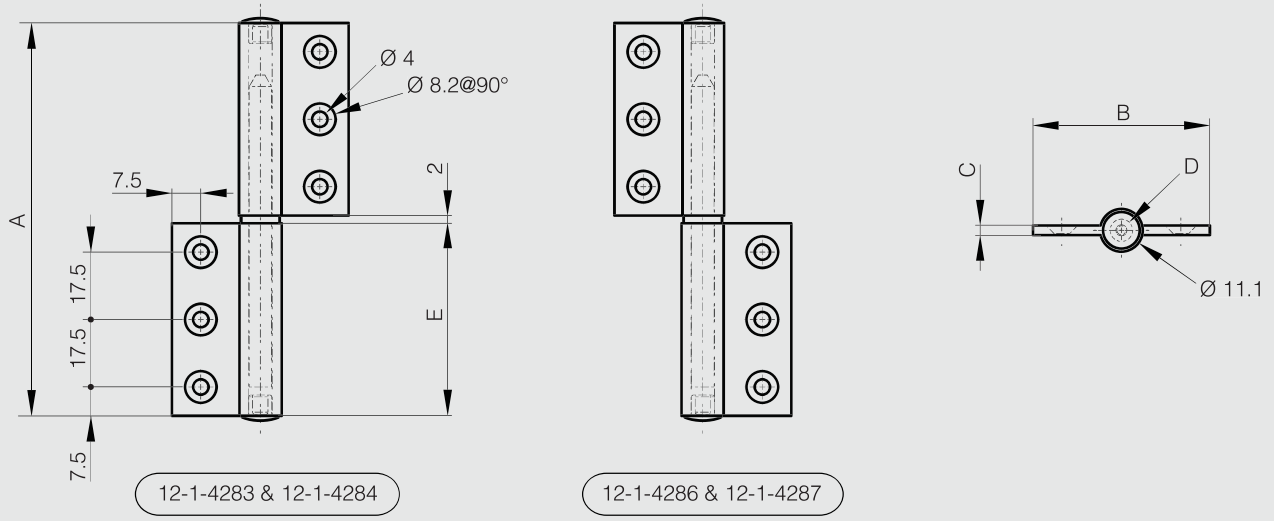

Flag hinge with washer - 62 x 62 mm

270° STEEL RoHS

Flag hinge with brass washer.

Part number	Material	Finish	A	B	C	D	E	Note	Weight (g)
12-1-3634	steel	raw	62	62	2.5	7	30	type 2	87
12-1-3635	steel	raw	62	62	2.5	7	30	type 1	87

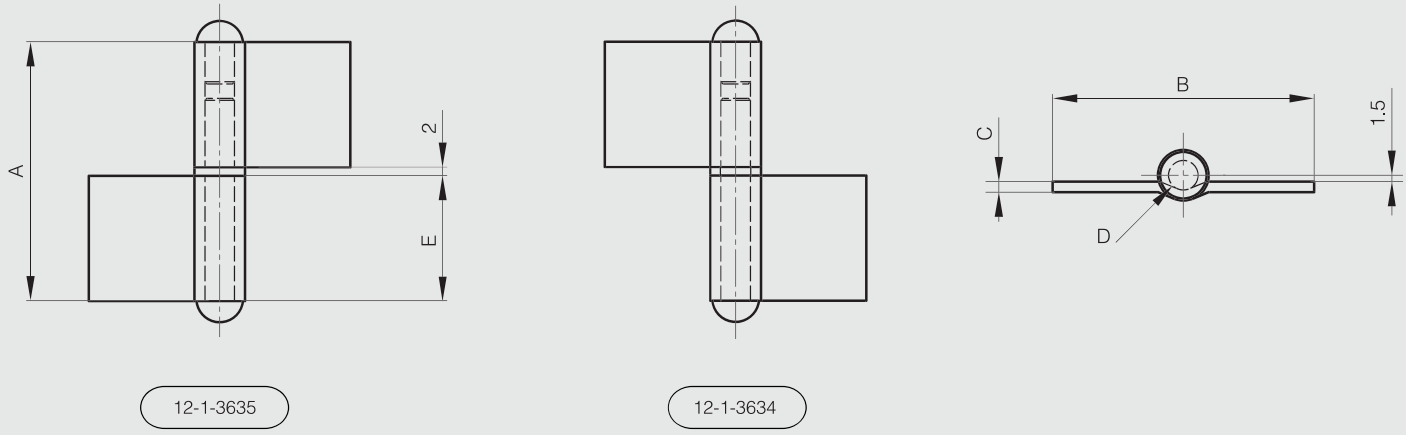

Flag hinge without washer with two offset leaves

Part number	Material	Finish	A	B	C	D	E	Weight (g)
12-1-3303	steel	raw	60	40	1.5	5.3	30	38
12-1-3849	steel	raw	80	40	1.5	5.3	40	51
12-1-3304	steel	raw	80	50	2	6	40	74
12-1-3769	304 stainless steel	raw	60	40	1.5	5.3	30	38
12-1-3770	304 stainless steel	raw	80	48	2	6	40	74

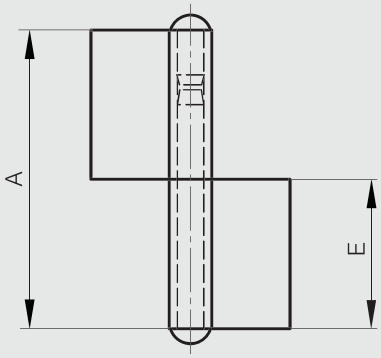

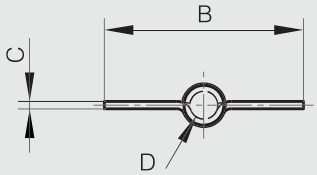

Flag hinge with washer with two offset leaves

Flag hinge with brass washer, included separately.
Produced mainly in stainless steel, for a complete description of the materials contact us.

Part number	Material	Finish	A	B	C	D	E	Weight (g)
12-1-3305	steel	raw	61.5	40	1.5	5.3	30	39
12-1-3306	steel	raw	81.5	50	2	5.8	40	75
12-1-3771	304 stainless steel	raw	61.5	40	1.5	5.3	30	39
12-1-3772	304 stainless steel	raw	81.5	48	2	5.8	40	75

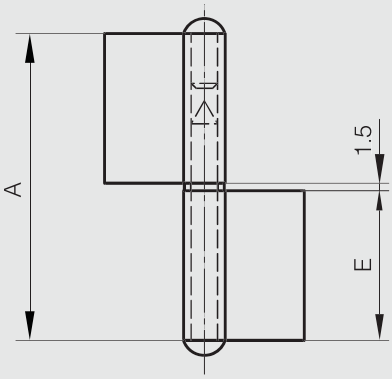

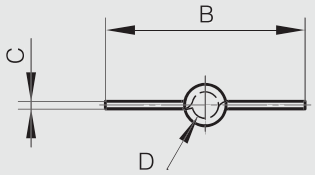

Flag hinge without washer - flat knuckle

Part number	Material	Finish	A	B	C	D	E	Note	Weight (g)
12-1-3307	steel	raw	60	40	1.5	5.3	30	type 2	39
12-1-3308	steel	raw	60	40	1.5	5.3	30	type 1	39
12-1-3309	steel	raw	80	48	2	5.8	40	type 2	76
12-1-3310	steel	raw	80	48	2	5.8	40	type 1	76

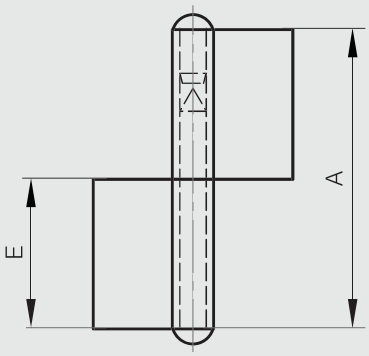

12-1-3308 & 12-1-3310

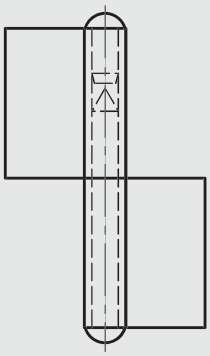

12-1-3307 & 12-1-3309

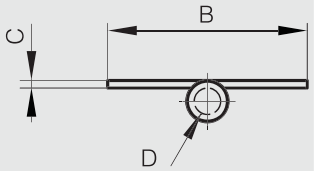

Flag hinge with washer - flat knuckle

Flag hinge with brass washer, included separately.

Part number	Material	Finish	A	B	C	D	E	Note	Weight (g)
12-1-3311	steel	raw	61.5	40	1.5	5.3	30	type 2	40
12-1-3312	steel	raw	61.5	40	1.5	5.3	30	type 1	40
12-1-3313	steel	raw	81.5	48	2	5.8	40	type 2	77
12-1-3314	steel	raw	81.5	48	2	5.8	40	type 1	77

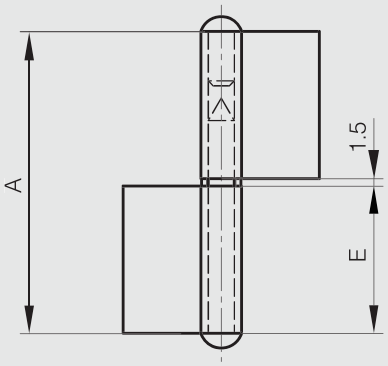

12-1-3312 & 12-1-3314

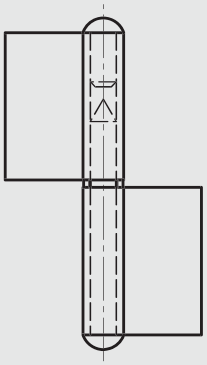

12-1-3311 & 12-1-3313

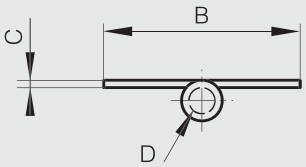

Flag hinge without washer - drilled - flat knuckle

Part number	Material	Finish	A	B	C	D	Note	Weight (g)
12-1-4258	304 stainless steel	raw	80	48	2	6	type 1	76
12-1-4285	304 stainless steel	raw	80	48	2	6	type 2	76

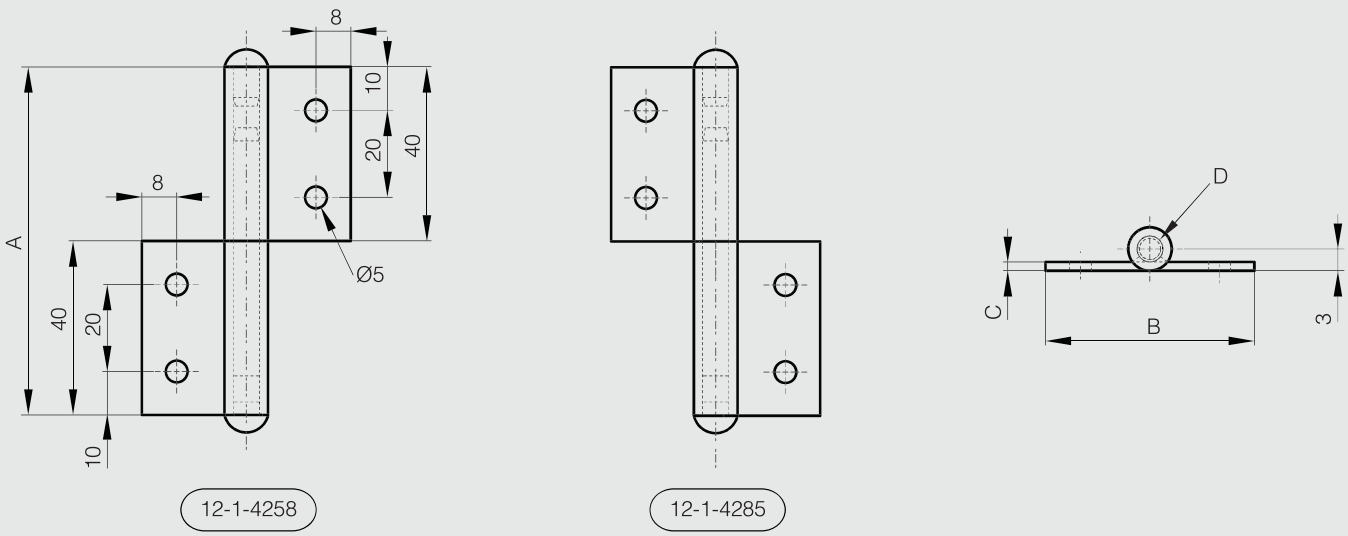

Dual Axis Torque Hinge

NOUVEAU

180° ZAMAK RoHS

Can be opened to 180°.
Shafts do not protrude when the hinge is fully open or closed.
Dual axis torque.
Different torque of two shafts provides easy operation:
Shaft A: 2.0 N.m +/-20%
Shaft B: 3.0 N.m +/-20%.

	Part number	Material	Finish	A	B	C	Torque	Weight (g)
NEW	70-7-3659	zinc die-cast	satin nickel	55	43.5	15	3.0 N.m	165

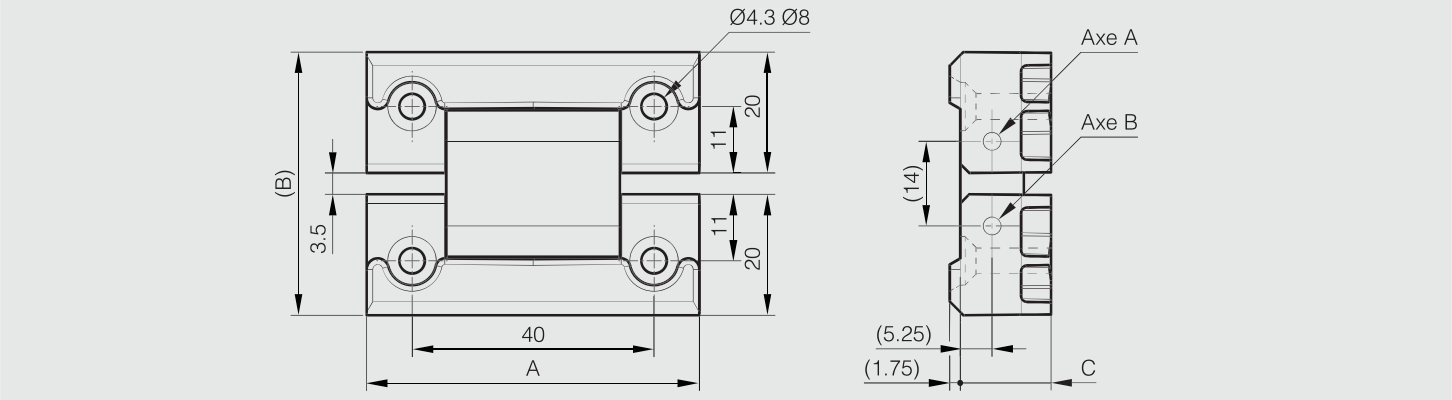

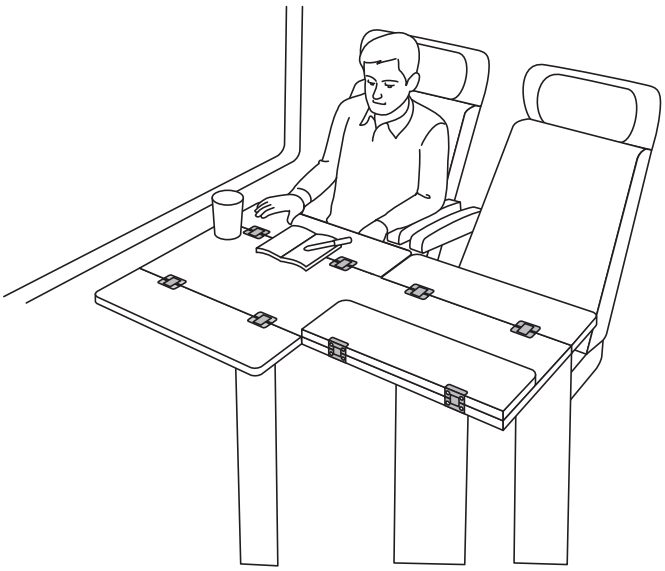

Hinge motions

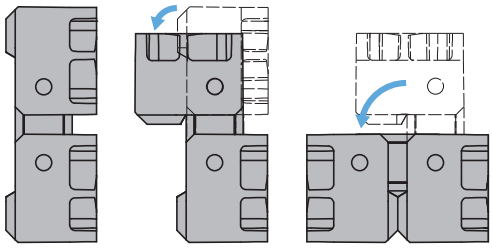

Table movement

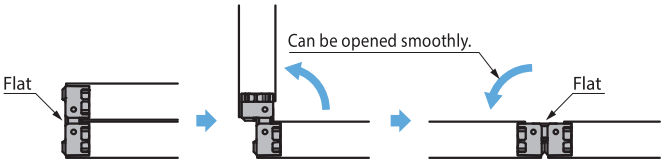

When fully opened

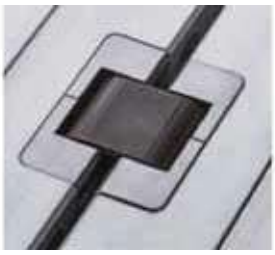

Flat and shafts do not protrude

Glass door hinge in brushed stainless steel

180° STAINLESS STEEL RoHS

Door thickness: 10 mm min.
Door weight: max. 10 kg / pair.

Supplied with EPDM gasket.
Included stainless steel bolts and stainless steel washers. Produced mainly in stainless steel, for a complete description of the materials contact us.

Part number	Material	Finish	A	B	C	D	Weight (g)
52-1-4040	304 stainless steel	brushed	40	35	2	4	80

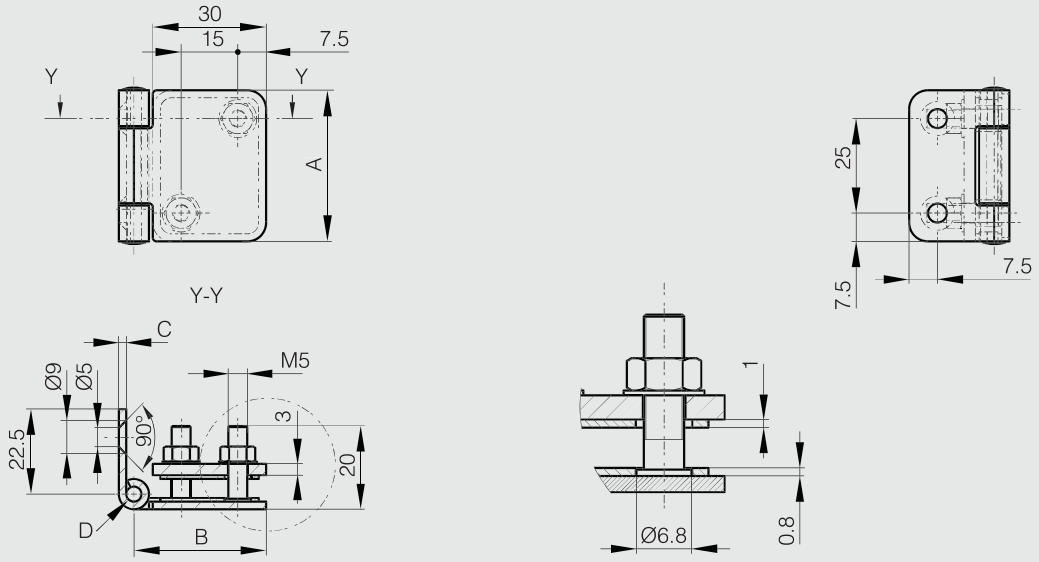

Glass door hinge in stainless steel

180° STAINLESS STEEL

Hinge for glass / acrylic doors (PMMA).
Door thickness: 4 - 6 mm.
Door weight: max. 4 kg / pair.
Leaves, pin and screw in 304 stainless steel. Plate in aluminium alloy, washer in chloroethylene.
Produced mainly in stainless steel, for a complete description of the materials contact us.

Part number	Material	Finish	A	B	C	D	Weight (g)
72-7-4254	304 stainless steel	raw	34	32	1.2	5	21

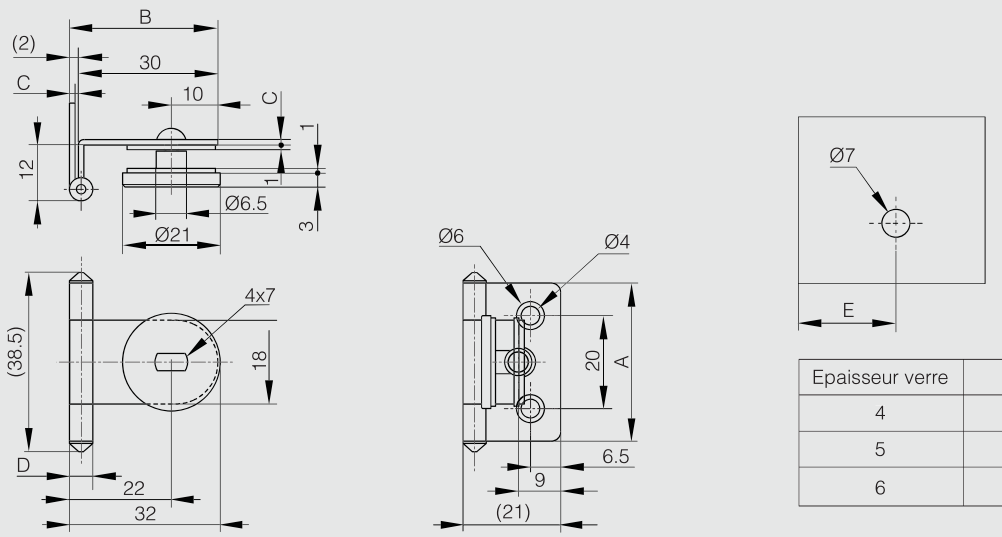

Epaisseur verre	E
4	19
5	18
6	17